PSG1303033CE

# Service Manual

## CD Stereo System

**Model No. SA-AKX76PH**
**SA-AKX76PN**

Product Color: (K)...Black Type

**Please refer to the original service manual for:**
- **CD Mechanism Unit , Order No. PSG1102001CE**
- **Speaker system SB-AKX76PN-K, Order No. PSG1303034CE**

### ⚠ WARNING

This service information is designed for experienced repair technicians only and is not designed for use by the general public. It does not contain warnings or cautions to advise non-technical individuals of potential dangers in attempting to service a product. Products powered by electricity should be serviced or repaired only by experienced professional technicians. Any attempt to service or repair the product or products dealt with in this service information by anyone else could result in serious injury or death.

### IMPORTANT SAFETY NOTICE

There are special components used in this equipment which are important for safety. These parts are marked by ⚠ in the Schematic Diagrams, Circuit Board Diagrams, Exploded Views and Replacement Parts List. It is essential that these critical parts should be replaced with manufacturer's specified parts to prevent shock, fire or other hazards. Do not modify the original design without permission of manufacturer.

# TABLE OF CONTENTS


PAGE

**1 Safety Precautions ---------- 3**
- 1.1. General Guidelines ---------- 3
- 1.2. Before Use (For PH only) ---------- 4
- 1.3. Before Repair and Adjustment ---------- 4
- 1.4. Protection Circuitry ---------- 4
- 1.5. Caution For Fuse Replacement ---------- 4
- 1.6. Safety Parts Information ---------- 5

**2 Warning ---------- 6**
- 2.1. Prevention of Electrostatic Discharge (ESD) to Electrostatically Sensitive (ES) Devices ---------- 6
- 2.2. Precaution of Laser Diode ---------- 7
- 2.3. Service caution based on Legal restrictions ---------- 8
- 2.4. Handling Precautions for Traverse Unit ---------- 9
- 2.5. Grounding for electrostatic breakdown prevention ---------- 10

**3 Service Navigation ---------- 11**
- 3.1. Service Information ---------- 11

**4 Specifications ---------- 13**

**5 General/Introduction ---------- 14**
- 5.1. Media Information ---------- 14

**6 Location of Controls and Components ---------- 15**
- 6.1. Remote Control Key Button Operation ---------- 15
- 6.2. Main Unit Key Button Operation ---------- 16

**7 Installation Instructions ---------- 17**
- 7.1. Speaker and A/C Connection ---------- 17

**8 Service Mode ---------- 18**
- 8.1. Cold-Start ---------- 18
- 8.2. Doctor Mode Table ---------- 19
- 8.3. Reliability Test Mode (CD Mechanism Unit) ---------- 22
- 8.4. Self-Diagnostic Mode ---------- 23
- 8.5. Self-Diagnostic Error Code Table ---------- 23
- 8.6. Sales Demonstration Lock Function ---------- 24


Panasonic®


© Panasonic Corporation 2013. All rights reserved. Unauthorized copying and distribution is a violation of law.

**9 Troubleshooting Guide** ---------- **25**
**10 Disassembly and Assembly Instructions** ---------- **26**
10.1. Screw Types ---------- 26
10.2. Disassembly Flow Chart ---------- 27
10.3. Main Components and P.C.B. Locations ---------- 28
10.4. Disassembly of Top Cabinet ---------- 29
10.5. Disassembly of Front Panel Unit ---------- 30
10.6. Disassembly of Panel P.C.B., LED P.C.B. and Music Port P.C.B. ---------- 31
10.7. Disassembly of Remote Sensor P.C.B. ---------- 33
10.8. Disassembly of USB P.C.B. ---------- 33
10.9. Disassembly of CD Lid ---------- 34
10.10. Disassembly of Rear Panel ---------- 34
10.11. Disassembly of Main P.C.B. ---------- 35
10.12. Disassembly of SMPS P.C.B. and Voltage Selector P.C.B. ---------- 37
10.13. Disassembly of CD Mechanism Unit ---------- 37
10.14. Disassembly of CD Interface P.C.B. ---------- 39
10.15. Disassembly of Fan Unit ---------- 39
**11 Service Position** ---------- **40**
11.1. Checking of Panel P.C.B. ---------- 40
11.2. Checking of Main P.C.B. (Side A) ---------- 40
11.3. Checking of Main P.C.B. (Side B) ---------- 40
11.4. Checking of SMPS P.C.B. ---------- 41
**12 Block Diagram** ---------- **43**
12.1. Servo & System Control ---------- 43
12.2. Audio ---------- 45
12.3. Power Supply ---------- 47
**13 Wiring Connection Diagram** ---------- **49**
**14 Schematic Diagram** ---------- **51**
14.1. Schematic Diagram Notes ---------- 51
14.2. MAIN (CD Servo/Micon/Damp) Circuit ---------- 53
14.3. Panel Circuit ---------- 67
14.4. USB, Music Port, Memory LED & Remote Sensor Circuit ---------- 69
14.5. SMPS Circuit ---------- 70
14.6. Voltage Selector & CD Interface Circuit ---------- 72
**15 Printed Circuit Board** ---------- **73**
15.1. Main P.C.B. ---------- 73
15.2. Panel, USB, Music Port & Memory LED P.C.B. ---------- 75
15.3. SMPS & Voltage Selector P.C.B. ---------- 76
15.4. Remote Sensor & CD Interface P.C.B. ---------- 77
**16 Appendix Information of Schematic Diagram** ---------- **79**
16.1. Voltage & Waveform Chart ---------- 79
**17 Exploded View and Replacement Parts List** ---------- **87**
17.1. Exploded View and Mechanical replacement Part List ---------- 87
17.2. Electrical Replacement Part List ---------- 93

# 1 Safety Precautions

## 1.1. General Guidelines

1. **IMPORTANT SAFETY NOTICE**
   There are special components used in this equipment which are important for safety. These parts are marked by ⚠ in the Schematic Diagrams, Circuit Board Layout, Exploded Views and Replacement Parts List. It is essential that these critical parts should be replaced with manufacturer's specified parts to prevent X-RADIATION, shock, fire, or other hazards. Do not modify the original design without permission of manufacturer.
2. An Isolation Transformer should always be used during the servicing of AC Adaptor whose chassis is not isolated from the AC power line. Use a transformer of adequate power rating as this protects the technician from accidents resulting in personal injury from electrical shocks. It will also protect AC Adaptor from being damaged by accidental shorting that may occur during servicing.
3. When servicing, observe the original lead dress. If a short circuit is found, replace all parts which have been overheated or damaged by the short circuit.
4. After servicing, see to it that all the protective devices such as insulation barriers, insulation papers shields are properly installed.
5. After servicing, make the following leakage current checks to prevent the customer from being exposed to shock hazards.

### 1.1.1. Leakage Current Cold Check

1. Unplug the AC cord and connect a jumper between the two prongs on the plug.
2. Measure the resistance value, with an ohmmeter, between the jumpered AC plug and each exposed metallic cabinet part on the equipment such as screwheads, connectors, control shafts, etc. When the exposed metallic part has a return path to the chassis, the reading should be between 1MΩ and 5.2MΩ.
   When the exposed metal does not have a return path to the chassis, the reading must be ∞

### 1.1.2. Leakage Current Hot Check

1. Plug the AC cord directly into the AC outlet. Do not use an isolation transformer for this check.
2. Connect a 1.5kΩ, 10 watts resistor, in parallel with a 0.15μF capacitors, between each exposed metallic part on the set and a good earth ground such as a water pipe, as shown in Figure 1-1.
3. Use an AC voltmeter, with 1000 ohms/volt or more sensitivity, to measure the potential across the resistor.
4. Check each exposed metallic part, and measure the voltage at each point.
5. Reverse the AC plug in the AC outlet and repeat each of the above measurements.
6. The potential at any point should not exceed 0.75 volts RMS. A leakage current tester (Simpson Model 229 or equivalent) may be used to make the hot checks, leakage current must not exceed 1/2 milliamp. In case a measurement is outside of the limits specified, there is a possibility of a shock hazard, and the equipment should be repaired and rechecked before it is returned to the customer.

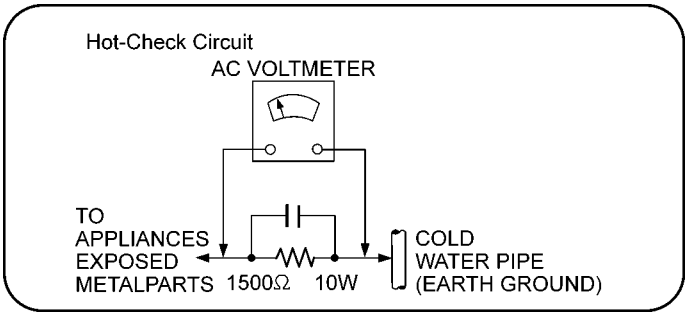


Figure 1-1

## 1.2. Before Use (For PH only)

Be sure to disconnect the mains cord before adjusting the voltage selector as shown in Figure 1-2
Use a minus(-) screwdriver to set the voltage selector (on the rear panel) to the voltage setting for the area in which the unit will be used.
Note that this unit will be seriously damaged if this setting is not made correctly. (There is no voltage selector for some countries, the correct voltage is already set.)

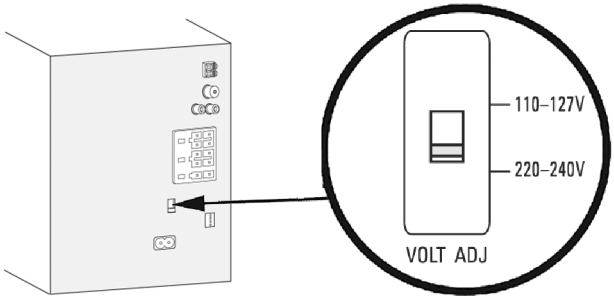


Figure 1-2

## 1.3. Before Repair and Adjustment

Disconnect AC power to discharge unit AC Capacitors as such (C5700, C5701, C5703, C5704 (PN), C5705 (PN), C5706, C5707, C5708) through a 10 Ω, 10 W resistor to ground.

**Caution:**

DO NOT SHORT-CIRCUIT DIRECTLY (with a screwdriver blade, for instance), as this may destroy solid state devices.

After repairs are completed, restore power gradually using a variac, to avoid overcurrent.
Current consumption at AC 110~127 V / 220~240 V, 50/60 Hz in FM Tuner at volume minimum should be ~ 750 mA (PH).
Current consumption at AC 120 V, 60 Hz in FM Tuner at volume minimum should be ~ 500 mA (PN).

## 1.4. Protection Circuitry

The protection circuitry may have operated if either of the following conditions are noticed:

- No sound is heard when the power is turned on.
- Sound stops during a performance.

The function of this circuitry is to prevent circuitry damage if, for example, the positive and negative speaker connection wires are “shorted”, or if speaker systems with an impedance less than the indicated rated impedance of the amplifier are used.
If this occurs, follow the procedure outlines below:

1. Turn off the power.
2. Determine the cause of the problem and correct it.
3. Turn on the power once again after one minute.

**Note:**

When the protection circuitry functions, the unit will not operate unless the power is first turned off and then on again.

## 1.5. Caution For Fuse Replacement

### CAUTION:

Replace with the same type fuse:
(Manufacturer: LITTELFUSE, INC, Type: 233, F1, 8A, 125V) (For PN only)

### CAUTION:

Replace with the same type fuse:
(Manufacturer: HOLLYLAND, INC, Type: 50T, F1,T 8AL ,250V) (For PH only)

# 1.6. Safety Parts Information

**Safety Parts List:**

There are special components used in this equipment which are important for safety.

These parts are marked by ⚠ in the Schematic Diagrams, Exploded View & Replacement Parts List. It is essential that these critical parts should be replaced with manufacturer's specified parts to prevent shock, fire or other hazards. Do not modify the original design without permission of manufacturer.

| Safety | Ref No. | Part No. | Part Name & Description | Remarks |
|---|---|---|---|---|
| ⚠ | 16 | RGR0443E-A1 | REAR PANEL | PN |
| ⚠ | 16 | RGR0443F-A1 | REAR PANEL | PH |
| ⚠ | 17 | RKM0713-K | TOP CABINET | |
| ⚠ | 301 | RAE1036Z-V | TRAVERSE ASS'Y | |
| ⚠ | A2 | K2CB2CB00022 | AC CORD | PN |
| ⚠ | A2 | K2CQ2YY00119 | AC CORD | PH |
| ⚠ | A3 | RQT9798-M | O/I BOOK (Sp/En) | |
| ⚠ | PCB8 | REP4965F | SMPS P.C.B. | (RTL) PH |
| ⚠ | PCB10 | REP4965D | SMPS P.C.B. | (RTL) PN |
| ⚠ | DZ5701 | D4EAY511A127 | VARISTOR | (E.S.D) |
| ⚠ | S5701 | K0ABCA000007 | AC VOLTAGE SELECTOR | PH |
| ⚠ | L5702 | G0B932H00003 | LINE FILTER | |
| ⚠ | T5701 | G4DYZ0000070 | TRANSFORMER | |
| ⚠ | T5751 | G4DYZ0000064 | TRANSFORMER | |
| ⚠ | F1 | K5D802APA008 | FUSE | PN |
| ⚠ | F1 | K5D802BK0004 | FUSE | PH |
| ⚠ | PC5701 | B3PBA0000579 | PHOTO COUPLER | |
| ⚠ | PC5702 | B3PBA0000579 | PHOTO COUPLER | |
| ⚠ | PC5720 | B3PBA0000579 | PHOTO COUPLER | |
| ⚠ | PC5799 | B3PBA0000579 | PHOTO COUPLER | |
| ⚠ | P5701 | K2AA2B000011 | AC INLET | PH |
| ⚠ | P5701 | K2AB2B000007 | AC INLET | PN |
| ⚠ | R5708 | D0GF155JA048 | 1.5M 1/4W | |
| ⚠ | R5709 | D0GF155JA048 | 1.5M 1/4W | |
| ⚠ | C5700 | F1BAF1020020 | 1000pF | PH |
| ⚠ | C5700 | F1BAF471A013 | 470pF | PN |
| ⚠ | C5701 | F0CAF104A105 | 0.1uF | |
| ⚠ | C5703 | F0CAF224A105 | 0.22uF | |
| ⚠ | C5704 | F1BAF471A013 | 470pF | PN |
| ⚠ | C5705 | F1BAF471A013 | 470pF | PN |
| ⚠ | C5706 | F1BAF471A013 | 470pF | |
| ⚠ | C5707 | F1BAF471A013 | 470pF | |
| ⚠ | C5708 | F1BAF1020020 | 1000pF | PH |
| ⚠ | C5708 | F1BAF471A013 | 470pF | PN |

# 2 Warning

## 2.1. Prevention of Electrostatic Discharge (ESD) to Electrostatically Sensitive (ES) Devices

Some semiconductor (solid state) devices can be damaged easily by static electricity. Such components commonly are called Electrostatically Sensitive (ES) Devices.

Examples of typical ES devices are IC (integrated circuits) and some field-effect transistors and semiconductor "chip" components.

The following techniques should be used to help reduce the incidence of component damage caused by electrostatic discharge (ESD).

1. Immediately before handling any semiconductor component or semiconductor-equipped assembly, drain off any ESD on your body by touching a known earth ground. Alternatively, obtain and wear a commercially available discharging ESD wrist strap, which should be removed for potential shock reasons prior to applying power to the unit under test.
2. After removing an electrical assembly equipped with ES devices, place the assembly on a conductive surface such as aluminum foil, to prevent electrostatic charge buildup or exposure of the assembly.
3. Use only a grounded-tip soldering iron to solder or unsolder ES devices.
4. Use only an anti-static solder removal device. Some solder removal devices not classified as “anti-static (ESD protected)” can generate electrical charge sufficient to damage ES devices.
5. Do not use freon-propelled chemicals. These can generate electrical charges sufficient to damage ES devices.
6. Do not remove a replacement ES device from its protective package until immediately before you are ready to install it. (Most replacement ES devices are packaged with leads electrically shorted together by conductive foam, aluminum foil or comparable conductive material).
7. Immediately before removing the protective material from the leads of a replacement ES device, touch the protective material to the chassis or circuit assembly into which the device will be installed.
   **CAUTION:**
   Be sure no power is applied to the chassis or circuit, and observe all other safety precautions.
8. Minimize bodily motions when handling unpackaged replacement ES devices. (Otherwise harmless motion such as the brushing together of your clothes fabric or the lifting of your foot from a carpeted floor can generate static electricity (ESD) sufficient to damage an ES device).

**IMPORTANT SAFETY NOTICE**

There are special components used in this equipment which are important for safety. These parts are marked by ⚠ in the Schematic Diagrams, Circuit Board Diagrams, Exploded Views and Replacement Parts List. It is essential that these critical parts should be replaced with manufacturer's specified parts to prevent shock, fire or other hazards. Do not modify the original design without permission of manufacturer.

## 2.2. Precaution of Laser Diode

**CAUTION:**
THIS PRODUCT UTILIZES A LASER.
USE OF CONTROLS OR ADJUSTMENTS OR PERFORMANCE OF PROCEDURES OTHER THAN THOSE SPECIFIED HEREIN MAY RESULT IN HAZARDOUS RADIATION EXPOSURE.

**Caution:**

This product utilizes a laser diode with the unit turned “on”, invisible laser radiation is emitted from the pickup lens.
Wavelength: 790 nm (CD)
Maximum output radiation power from pickup: 100 μW/VDE
Laser radiation from the pickup unit is safety level, but be sure the followings:

1. Do not disassemble the pickup unit, since radiation from exposed laser diode is dangerous.
2. Do not adjust the variable resistor on the pickup unit. It was already adjusted.
3. Do not look at the focus lens using optical instruments.
4. Recommend not to look at pickup lens for a long time.

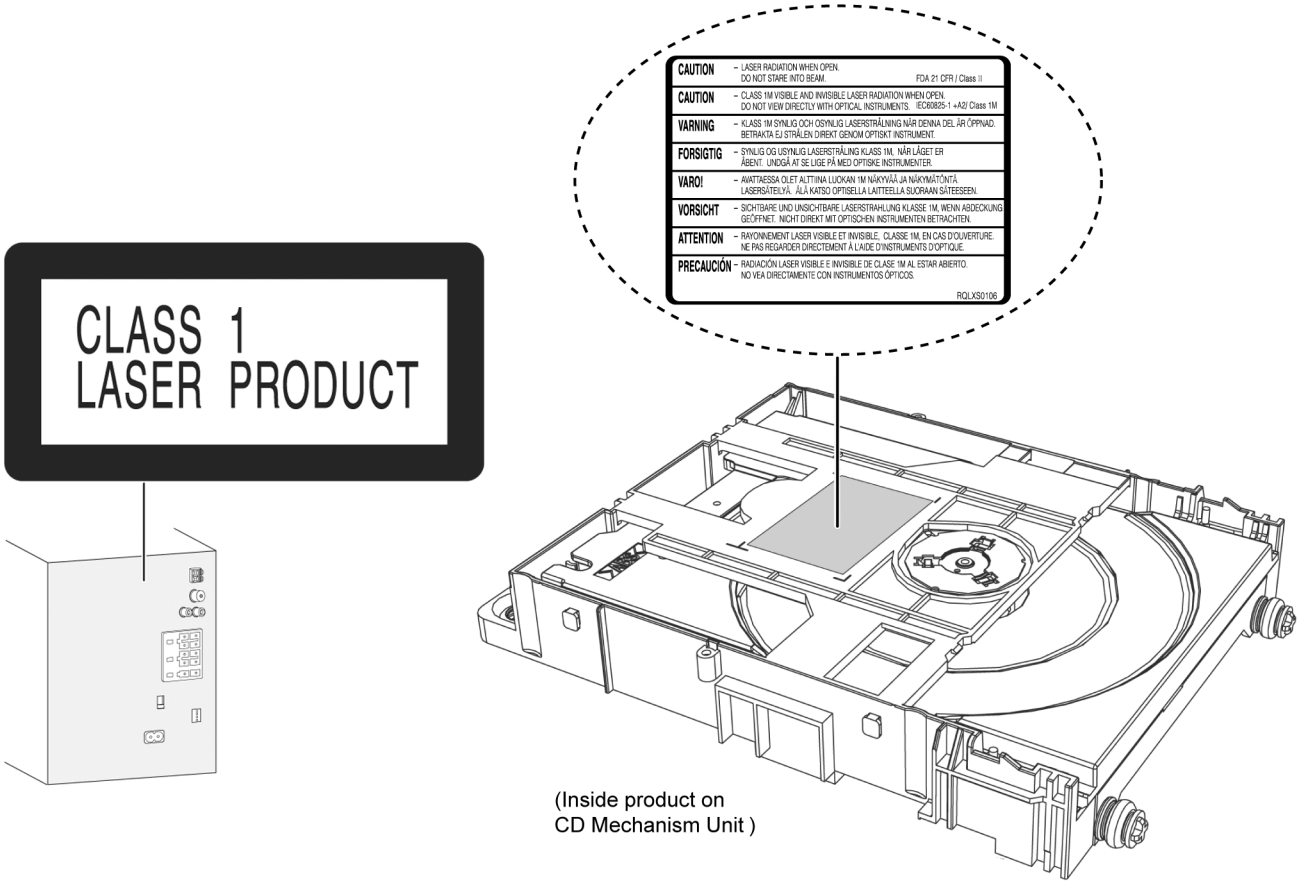


Figure 2-1

## 2.3. Service caution based on Legal restrictions

### 2.3.1. General description about Lead Free Solder (PbF)

The lead free solder has been used in the mounting process of all electrical components on the printed circuit boards used for this equipment in considering the globally environmental conservation.

The normal solder is the alloy of tin (Sn) and lead (Pb). On the other hand, the lead free solder is the alloy mainly consists of tin (Sn), silver (Ag) and Copper (Cu), and the melting point of the lead free solder is higher approx.30 degrees C (86°F) more than that of the normal solder.

**Definition of PCB Lead Free Solder being used**

| | |
|---|---|
| The letter of “PbF” is printed either foil side or components side on the PCB using the lead free solder.<br><br>(See right figure) | PbF |

**Service caution for repair work using Lead Free Solder (PbF)**

- The lead free solder has to be used when repairing the equipment for which the lead free solder is used.
  (Definition: The letter of “PbF” is printed on the PCB using the lead free solder.)
- To put lead free solder, it should be well molten and mixed with the original lead free solder.
- Remove the remaining lead free solder on the PCB cleanly for soldering of the new IC.
- Since the melting point of the lead free solder is higher than that of the normal lead solder, it takes the longer time to melt the lead free solder.
- Use the soldering iron (more than 70W) equipped with the temperature control after setting the temperature at 350±30 degrees C (662±86°F).

**Recommended Lead Free Solder (Service Parts Route.)**

- The following 3 types of lead free solder are available through the service parts route.
  RFKZ03D01K----------(0.3mm 100g Reel)
  RFKZ06D01K----------(0.6mm 100g Reel)
  RFKZ10D01K----------(1.0mm 100g Reel)

**Note**

* Ingredient: tin (Sn), 96.5%, silver (Ag) 3.0%, Copper (Cu) 0.5%, Cobalt (Co) / Germanium (Ge) 0.1 to 0.3%

## 2.4. Handling Precautions for Traverse Unit

The laser diode in the optical pickup unit may break down due to static electricity of clothes or human body. Special care must be taken avoid caution to electrostatic breakdown when servicing and handling the laser diode in the traverse unit.

### 2.4.1. Cautions to Be Taken in Handling the Optical Pickup Unit

The laser diode in the optical pickup unit may be damaged due to electrostatic discharge generating from clothes or human body. Special care must be taken avoid caution to electrostatic discharge damage when servicing the laser diode.

1. Do not give a considerable shock to the optical pickup unit as it has an extremely high-precise structure.
2. To prevent the laser diode from the electrostatic discharge damage, the flexible cable of the optical pickup unit removed should be short-circuited with a short pin or a clip.
3. The flexible cable may be cut off if an excessive force is applied to it. Use caution when handling the flexible cable.
4. The antistatic FPC is connected to the new optical pickup unit. After replacing the optical pickup unit and connecting the flexible cable, cut off the antistatic FPC.

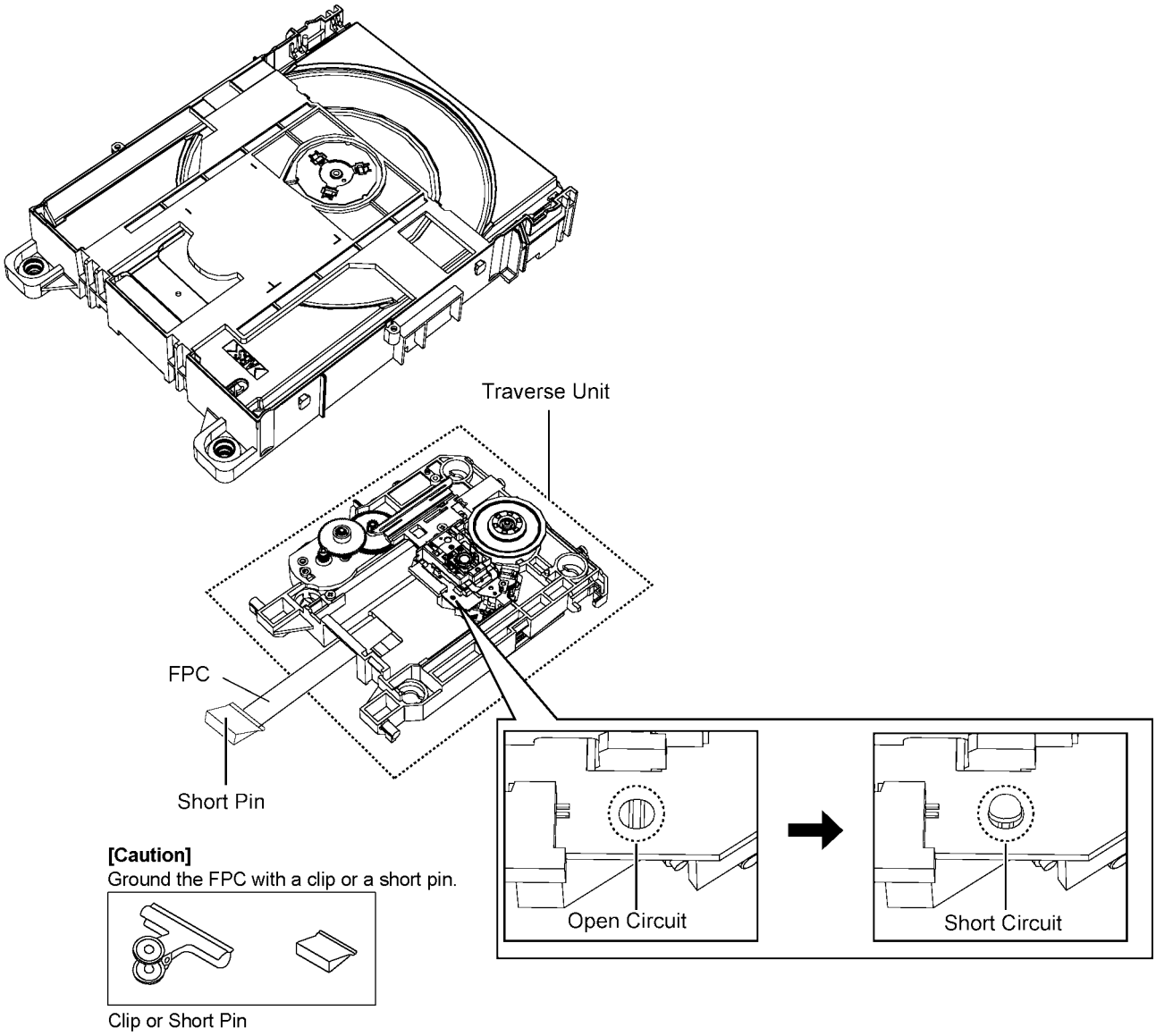


Figure 2-2

## 2.5. Grounding for electrostatic breakdown prevention

- As for parts that use optical pick-up (laser diode), the optical pick-up is destroyed by the static electricity of the working environment.
  Repair in the working environment that is grounded.

### 2.5.1. Worktable grounding

- Put a conductive material (sheet) or iron sheet on the area where the optical pickup is placed and ground the sheet.

### 2.5.2. Human body grounding

- Use the anti-static wrist strap to discharge the static electricity form your body Figure 2-3

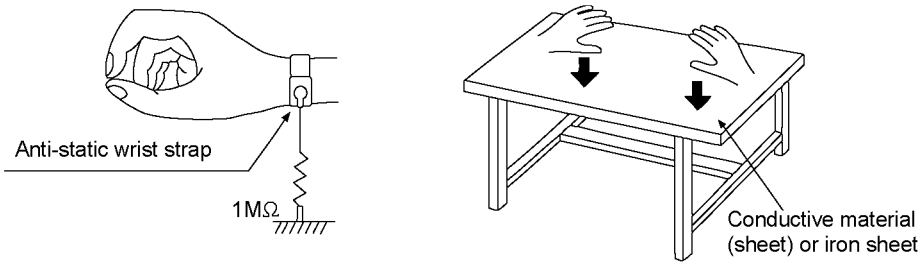


Figure 2-3

# 3 Service Navigation

## 3.1. Service Information

This service manual contains technical information which will allow service personnel's to understand and service this model. Please place orders using the parts list and not the drawing reference numbers.

If the circuit is changed or modified, this information will be followed by supplement service manual to be filed with original service manual.

- **Micro-processor:**

1) The following components are supplied as an assembled part.
   - Micro-processor IC, IC2006 (RFKWMAKX56LM)

### 3.1.1. Firmware Update Procedure

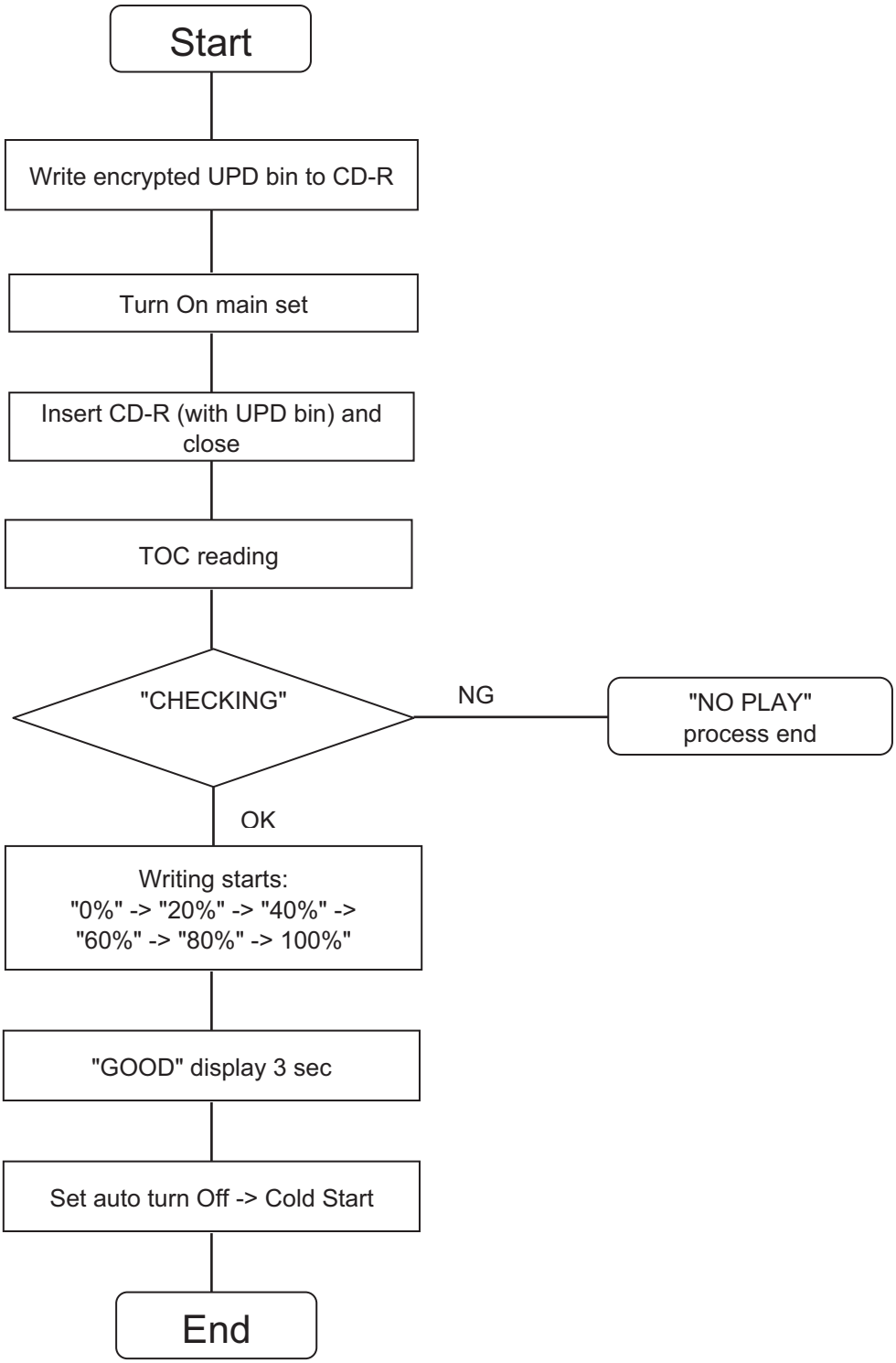

# 4 Specifications

■ **Amplifier section**

**RMS output power stereo mode**

| | |
|---|---|
| Front Hi (both ch driven) | 250 W per channel (3Ω), 1 kHz, 30% THD |
| Front Lo (both ch driven) | 250 W per channel (3Ω), 100 Hz, 30% THD |
| Subwoofer ch | 400 W per channel (2Ω), 100 Hz, 30% THD |
| Total RMS stereo mode power | 1400 W (30% THD) |

■ **Tuner, terminals section**

| | |
|---|---|
| **Preset memory** | FM 30 stations<br>AM 15 stations |
| **Frequency modulation (FM)** | |
| Frequency range | 87.50 to 108.00 MHz<br>(50 kHz step) (for PH)<br>87.5 to 108.0 MHz<br>(100 kHz step) (for PN)<br>87.9 to 107.9 MHz<br>(200 kHz step) (for PN) |
| Antenna terminals | 75 Ω (unbalanced) |
| **Amplitude modulation (AM)** | |
| Frequency range | 522 kHz to 1629 kHz<br>(9 kHz step) (for PH)<br>520 kHz to 1630 kHz<br>(10 kHz step) (for PH)<br>520 kHz to 1710 kHz<br>(10 kHz step) (for PN) |
| **Music port (front)** | |
| Sensitivity | 100 mV, 4.7 kΩ |
| Terminal | Stereo, 3.5 mm jack |
| **Aux Input** | RCA pin jack |

■ **Disc section**

| | |
|---|---|
| **Discs played (8 cm or 12 cm)** | CD, CD-R/RW(CD-DA, MP3*) |
| **Pick up** | |
| Wavelength | 790 nm(CD) |
| **Audio output** | |
| Number of channels | 2.1 ch (FL, FR, SW) |

FL = Front left channel
FR = Front right channel
SW = Subwoofer channel
*MPEG-1 Layer 3

■ **Internal memory section**

| | |
|---|---|
| **Memory** | |
| Memory size | 2 GB |
| Media file format support | MP3 (*.mp3) |
| **Memory recording** | |
| Bit rate | 128 kbps |
| Memory recording speed | 1x, 3x max (CD only) |
| Recording file format | MP3 (*.mp3) |
| Capacity of total songs recorded | 510 songs |

(use 128 kbps, approximately 1 song = 4 mins)

■ **USB section**

| | |
|---|---|
| **USB port** | |
| USB standard | USB 2.0 full speed |
| Media file format support | MP3 (*.mp3) |
| USB device file system | FAT12, FAT16, FAT32 |
| USB port power | 500 mA (max) |
| Bit rate | 16 kbps to 320 kbps (playback) |
| **USB recording** | |
| Bit rate | 128 kbps |
| USB recording speed | 1x, 3x max (CD only) |
| Recording file format | MP3 (*.mp3) |

■ **General**

| | |
|---|---|
| **Power supply** | AC 110 to 127/220 to 240 V,<br>50/60 Hz (for PH)<br>AC 120 V, 60 Hz (for PN) |
| **Power consumption** | 125 W (PH)<br>120 W (PN) |
| **Dimensions (W x H x D)** | 220 mm x 334 mm x 250 mm |
| **Mass** | 3.4 kg |
| **Operating temperature range** | 0 °C to +40 °C |
| **Operating humidity range** | 35% to 80% RH<br>(no condensation) |
| **Power Consumption in standby mode** | 0.3 W (approximate)(PH)<br>0.2 W (approximate)(PN) |

**Note:**

1. Specifications are subject to change without notice.
   Mass and dimension are appropriate
2. Total harmonic distortion is measured by the digital spectrum analyzer.

■ System: SC-AKX76PH-K

Main Unit: SA-AKX76PH-K
Speakers System: SB-AKX76PN-K

■ System: SC-AKX76PN-K

Main Unit: SA-AKX76PN-K
Speakers System: SB-AKX76PN-K

# 5 General/Introduction

## 5.1. Media Information

**Note on disc**

- This system can play CD-R/RW with CD-DA or MP3 format content.
- Some CD-R/RW cannot be played because of the condition of the recording.
- MP3 files are defined as tracks and folders are defined as albums.
- This system can access up to:
  - CD-DA: 99 tracks
  - MP3: 999 tracks, 255 albums and 20 sessions
- Disc must conform to ISO9660 level 1 or 2 (except for extended formats).
- Recordings will not necessarily be played in the order you recorded them.

MPEG Layer-3 audio coding technology licensed from Fraunhofer IIS and Thomson.

# 6 Location of Controls and Components

## 6.1. Remote Control Key Button Operation

❶ **Standby/on switch** [⏻], [⏻/I]
Press to switch the unit from on to standby mode or vice versa. In standby mode, the unit is still consuming a small amount of power.

❷ Alphanumeric buttons
To select a 2-digit number
Example: 16: [≧10]→[1]→[6]
To set a character
Example: B: [2]→[2]

❸ Delete a programmed track
Delete a selected track in a playlist

❹ Select audio source

❺ Basic playback control

❻ Select the sound effects

❼ Start the title search for internal memory

❽ View content information
**Decrease the brightness of the display panel**
Press and hold the button to use this function.
To cancel, press and hold the button again.

❾ Recording operation control

❿ Set the play timer and record timer

⓫ Set the clock and timer

⓬ Set the sleep timer
**Automatically switch off the system**
When you are in disc, USB or internal memory source, the auto off function switches off the system if you do not use the system for 30 minutes.
Press and hold the button to use this function.
To cancel, press and hold the button again.

⓭ Set the program function

⓮ Adjust the volume of the system

⓯ **Mute the sound of the system**
To cancel, press the button again.
"MUTE" is also canceled when you adjust the volume or when you switch off the system.

⓰ Set the play menu item

⓱ Internal memory playlist operation

⓲ Select the option

⓳ Set the edit mode for USB and internal memory

## 6.2. Main Unit Key Button Operation

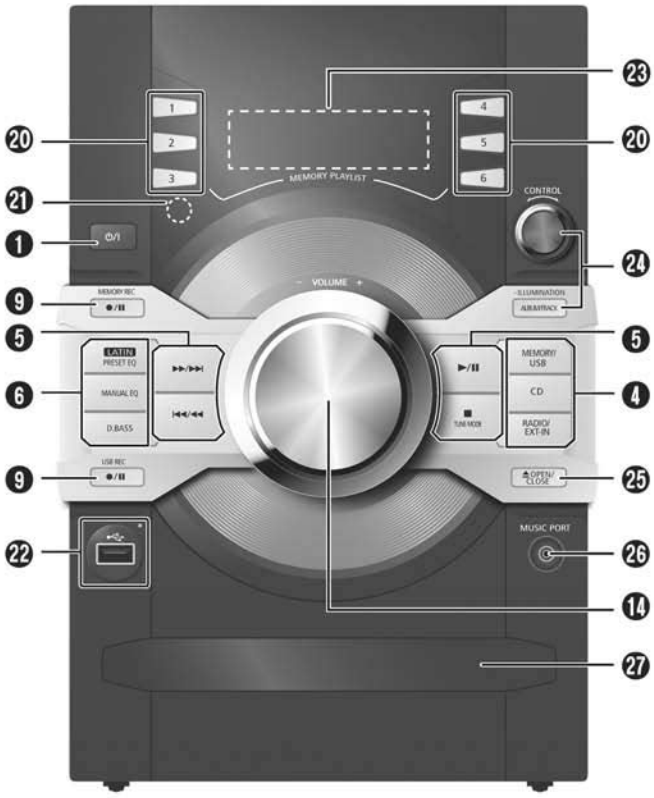


❶ **Standby/on switch** [⏻], [⏻/I]
Press to switch the unit from on to standby mode or vice versa. In standby mode, the unit is still consuming a small amount of power.

❹ Select audio source

❺ Basic playback control

❻ Select the sound effects

❾ Recording operation control

⓮ Adjust the volume of the system

⓴ **Internal memory playlist direct buttons**
Press and hold to add a track to the corresponding playlist.
Press to select the playlist.

㉑ Remote control sensor
Distance: Within approximately 7 m
Angle: Approximately 20° up and down, 30° left and right

㉒ USB port (⭠)
USB status indicator

㉓ Display panel

㉔ Browse playlist of the internal memory
**Browse tracks or albums**
(CD)
Turn [CONTROL] to browse the track.
Press [►/❚❚] to start playback from the selection.
(MP3)
Press [ALBUM/TRACK] to select album or track and then turn [CONTROL] to browse.
Press [►/❚❚] to start playback from the selection.

㉕ Open or close the disc tray

㉖ Music port jack

㉗ Disc tray

# 7 Installation Instructions

## 7.1. Speaker and A/C Connection

**Connect the AC mains lead only after all the other connections have been made.**

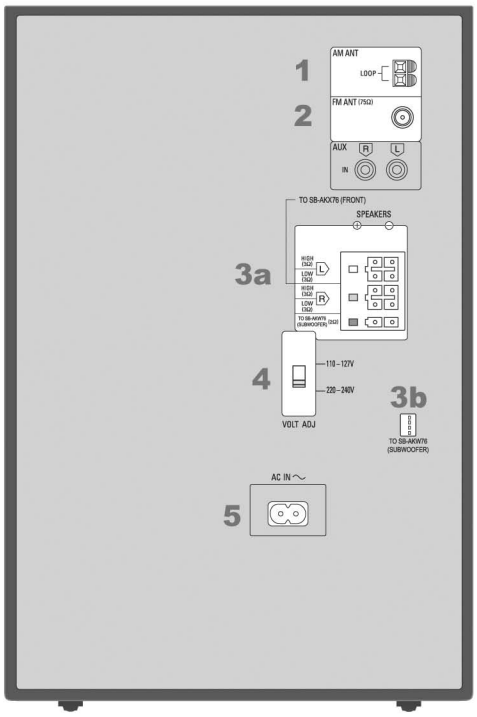


**1 Connect the AM loop antenna.**
Stand the antenna up on its base until it clicks.

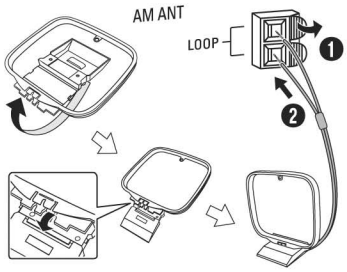


**2 Connect the FM indoor antenna.**
Place the antenna where reception is best.

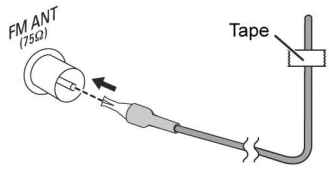


**3 Connect the speakers.**
Connect the speaker cables to the terminals of the same colour.

**3a**

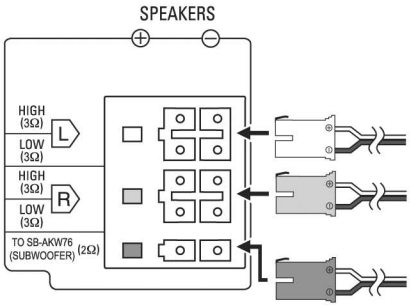


**3b**

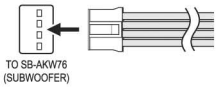


**4**

**For South America (except Argentina and Brazil)**
**Set the voltage.**

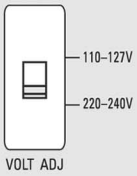


Use a flat-head screwdriver to set the voltage selector to the AC voltage in your area.

**5 Connect the AC mains lead.**

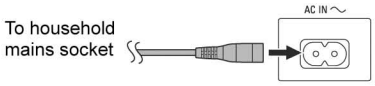


**For PH only**

If the power plug does not fit your socket, use the power plug adapter (supplied).

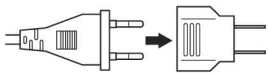

***Conserving power***
The system consumes approximately 0.4 W when it is in standby mode. Disconnect the power supply if you do not use the system.
Some settings will be lost after you disconnect the system. You have to set them again.

# 8 Service Mode

## 8.1. Cold-Start

Here is the procedure to carry out cold-start or initialize to shipping mode.

1. Unplug AC power cord
2. Press & hold [POWER] button
3. Plug AC power cord while [POWER] button being pressed
   FL Display will show "_ _ _ _ _ _ _ _"
4. Release [POWER] button

# 8.2. Doctor Mode Table

## 8.2.1. Doctor Mode Table 1

| Item | | FL Display | Key Operation |
|---|---|---|---|
| Mode Name | Description | | Front Key |
| Doctor Mode | To enter into Doctor Mode | NO DISC | In CD Mode:<br>1. Press [■] button on main unit follow by [4] and [7] on remote control.<br><br>2. To exit, press [DELETE] button on remote control or, press [POWER,⏻/I] button on Main Unit |
| EEPROM checksum check | Displaying of<br>1. Year Develop.<br>2. Model Type.<br>3. ROM Type.<br>4. Firmware Version. | (Display 1)<br>JUD YYY<br>① ② ③ ④ (Decimal)<br>Version No. (001 ~ 999) → specific for each firmware<br><br>(Display 2)<br>SUM YYYY<br>Checksum (Hex) | In CD mode:<br>1. Enter into Doctor Mode |

## 8.2.2. Doctor Mode Table 2

| Item | | FL Display | Key Operation |
|---|---|---|---|
| Mode Name | Description | | Front Key |
| Volume Setting Check | To check the volume setting of the main unit. | VOL - XXX<br>Volume<br>Press [7]: VOL50<br>Press [8]: VOL35<br>Press [9]: VOL0 | In Doctor Mode:<br>1. Press [7], [8], [9] button on the remote control. |
| FL Display Check | To check the FL segment display.<br>All segments will light up while all LED blink at 0.5s intervals. | | In Doctor mode:<br>1. Press [1] button on the remote control.<br>2. To cancel this mode, press [0] button on the remote control. |
| Traverse Test | To determine the traverse unit operation for inner & outer access track.<br><br>In this mode,ensure the CD is in the main unit.<br><br>Note: Refer to Section 8.3 Figure 8-2 for process flow | 00000000<br>The counter will increment by one.<br>When reach 99999999 will change to 00000000<br>Cancellation Display<br>CANCEL | In Doctor Mode:<br>1. Press [10]→[1]→[2] button on the remote control.<br><br>2. To cancel this mode, press [0] button on the remote control. |
| Reliability Test (Combination) | To determine the traverse unit operation & open/close operation of the mechanism.<br><br>In this mode,ensure the CD is in the main unit.<br><br>Note: Refer to Section 8.3 Figure 8-3 for process flow | 00000000<br>The counter will increment by one.<br>When reach 99999999 will change to 00000000<br>Cancellation Display<br>CANCEL | In Doctor Mode:<br>1. Press [10]→[1]→[5] button on the remote control.<br><br>2. To cancel this mode, press [0] button on the remote control. |
| Loading Test | To determine the open & close operation of the CD Mechanism Unit.<br><br>In this mode, the tray will open & close automatically.<br><br>Note: Refer to Section 8.3 Figure 8-1 for process flow | 00000000<br>The counter will increment by one.<br>When reach 99999999 will change to 00000000<br>Cancellation Display<br>CANCEL | In Doctor Mode:<br>1. Press [10]→[2]→[1] button on the remote control.<br><br>2. To cancel this mode, press [0] button on the remote control. |

## 8.2.3. Doctor Mode Table 3

<table>
<tr><th colspan="2">Item</th><th rowspan="2">FL Display</th><th>Key Operation</th></tr>
<tr><th>Mode Name</th><th>Description</th><th>Front Key</th></tr>
<tr>
<td>CD<br>Self- Adjustment Test</td>
<td>To display result of self-adjustment for CD.</td>
<td>
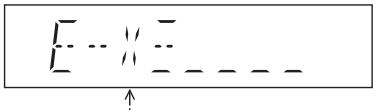

Reference table:
<table>
<tr><th>ERROR Code / Status Condition</th><th>0</th><th>1</th><th>2</th><th>4</th><th>6</th><th>8</th><th>A</th><th>C</th><th>E</th><th>F</th></tr>
<tr><td>AOC1/AOC2</td><td>O</td><td>※</td><td>O</td><td>O</td><td>O</td><td>O</td><td>O</td><td>O</td><td>O</td><td>-</td></tr>
<tr><td>ABC2/ABC1</td><td>O</td><td>-</td><td>X</td><td>O</td><td>X</td><td>O</td><td>X</td><td>O</td><td>X</td><td>-</td></tr>
<tr><td>2nd AOC1</td><td>O</td><td>-</td><td>O</td><td>X</td><td>X</td><td>O</td><td>O</td><td>X</td><td>X</td><td>-</td></tr>
<tr><td>FAGC/TAGC</td><td>O</td><td>-</td><td>O</td><td>O</td><td>O</td><td>X</td><td>X</td><td>X</td><td>X</td><td>-</td></tr>
<tr><td>AGC2</td><td>O</td><td>-</td><td>O</td><td>O</td><td>O</td><td>O</td><td>O</td><td>O</td><td>O</td><td>△</td></tr>
</table>
O : OK;<br>
X : NG (In case that time out happens.)<br>
※: Either one of FO AOC, TR AOC and FO coarse AGC is NG.<br>
△: If the AGC is NG (ignore others).
</td>
<td>In Doctor Mode:<br>1. Press [10]→[1]→[4] button on the remote control.<br><br>To cancel this mode, press [0] button on the remote control.</td>
</tr>
<tr>
<td>CD LSI Version Check</td>
<td>For checking CD LSI Version and checksum information.</td>
<td>
(Display 1)<br>
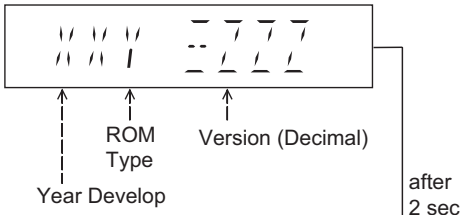

</td>
<td>In Doctor Mode:<br>1. Press [4] button on the remote control.<br><br>To cancel this mode, press [0] button on the remote control.</td>
</tr>
</table>

## 8.3. Reliability Test Mode (CD Mechanism Unit)

Below is the process flow chart of the aging test for the CD Mechanism Unit .

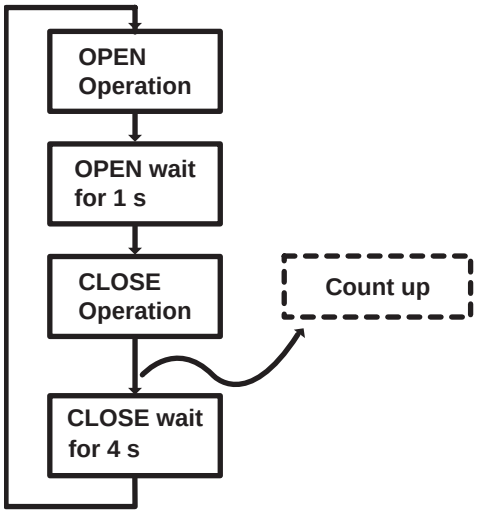


Fig. 1. Reliability Test (Loading)

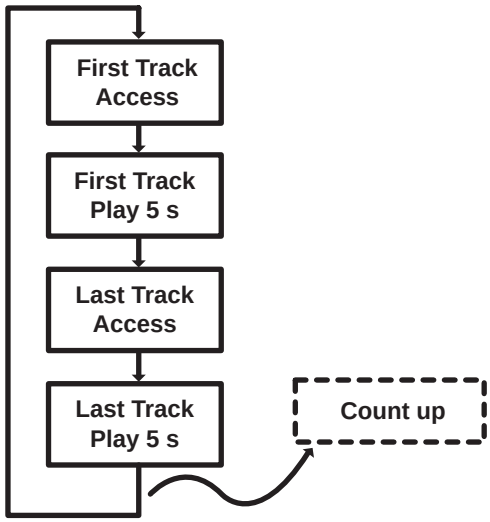


Fig. 2. Reliability Test (Traverse)

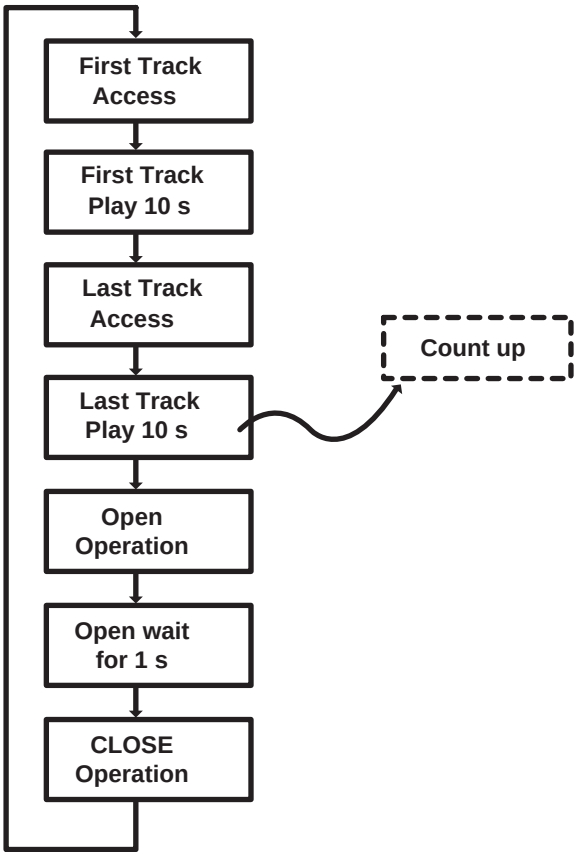


Fig. 3. Reliability Test (Combination)

## 8.4. Self-Diagnostic Mode

| Item | | FL Display | Key Operation |
|---|---|---|---|
| Mode Name | Description | | Front Key |
| Self Diagnostic Mode | To enter into self diagnostic checking | -- | Step 1: Select CD mode (Ensure no disc is inserted).<br><br>Step 2: Press & hold [■] button follow by [ ▶▶/▶▶I] on main unit for 2 seconds. |
| Error code information | System will perform a check on any unusual/error code from the memory | Example:<br>-- F76 | Step 1: In self diagnostic mode, Press [■] on main unit.<br><br>To exit, press [^/I] on main unit or remote control. |
| Delete error code | To clear the stored in memory (EEPROM IC) | CLEAR | Step 1: In self diagnostic mode, Press [0] on remote control.<br><br>To exit, press [^/I] on main unit or remote control. |
| Cold Start | To active cold start upon next AC power up when reset start is execute the next time. | -- -- -- -- -- -- -- -- | In self diagnostic mode:<br>1. Press [3] button on the remote control. |

## 8.5. Self-Diagnostic Error Code Table

Self-Diagnostic Function (Refer Section 8.4. Self-Diagnostic Mode) provides information on any problems occurring for the unit and its respective components by displaying the error codes. These error code such as U**, H** and F** are stored in memory and held unless it is cleared.

The error code is automatically display after entering into self-diagnostic mode.

### 8.5.1. Power Supply Error Code Table

| Error Code | Diagnosis Contents | Description of error | Automatic FL Display | Remarks |
|---|---|---|---|---|
| F61 | Power Amp IC output abnormal | Upon power on, PCONT=HIGH, DC_DET_AMP after checking LSI. | F61 | Press [■] on main unit for next error. |
| F76 | | DC_DET_PWR | F76 | |
| F61-76 | | Both DCDET (NG) | F61-F76 | |

### 8.5.2. CD Mechanism Error Code Table (CD Mechanism Unit)

| Error Code | Diagnostic Contents | Description of error | Automatic FL Display | Remarks |
|---|---|---|---|---|
| CD H15 | CD Open Abnormal | During operation POS_SW_R On fail to be detected with 4 sec. Error No. shall be clear by force or during cold start. | CD H15 | Press [■] on main unit for next error. |
| CD H16 | CD Closing Abnormal | During operation POS_SW_CEN On fail to be detected with 4 sec. Error No. shall be clear by force or during cold start. | CD H16 | Press [■] on main unit for next error. |
| F26 | Communication between CD servo LSI and micro-p abnormal. | During switch to CD function, if SENSE = “L” within failsafe time of 20ms. | F26 | Press [■] on main unit for next error. |

## 8.6. Sales Demonstration Lock Function

### 8.6.1. Entering into Sales demonstration lock mode

Here is the procedures to enter into the Sales demonstration lock mode.
Step 1: Turn on the unit.
Step 2: Select to any mode function.
Step 3: Press and hold [⏏OPEN/CLOSE] and [CD] keys for 5 sec or more.
The display will show upon entering into this mode for 2 sec..

--LOCK--

Note: [⏏OPEN/CLOSE] button is invalid and the main unit displays “LOCKED” while the lock function mode is entered.

### 8.6.2. Cancellation of Sales demonstration lock mode

Step 1: Turn on the unit.
Step 2: Select to any mode function.
Step 3: Set volume to Vol 19.
Step 4: Press and hold [⏏OPEN/CLOSE] and [CD] keys for 5 sec or more.
The display will show upon entering into this mode for 2 sec..

--UNLOCK--

# 9 Troubleshooting Guide

"Contents for this section is not available at time of issue"

# 10 Disassembly and Assembly Instructions

- **Illustration is based on SA-AKX76PH-K.**

**Caution Note:**

- **This section describes the disassembly and/or assembly procedures for all major printed circuit boards & main components for the unit. (You may refer to the section of "Main components and P.C.B Locations" as described in the service manual)**
- **Before carrying out the disassembly process, please ensure all the safety precautions & procedures are followed.**
- **During the disassembly and/or assembly process, please handle with care as there may be chassis components with sharp edges.**
- **Avoid touching heatsinks due to its high temperature after prolong use. (See caution as described below)**

**CAUTION: HOT!!**
**PLEASE DO NOT**
**TOUCH THE HEAT SINK**

- **During disassembly and assembly, please ensure proper service tools, equipments or jigs is being used.**
- **During replacement of component parts, please refer to the section of "Replacement Parts List" as described in the service manual.**
- **Select items from the following indexes when disassembly or replacement are required.**
- Disassembly of Top Cabinet
- Disassembly of Front Panel Unit
- Disassembly of Panel P.C.B., LED P.C.B. and Music Port P.C.B.
- Disassembly of Remote Sensor P.C.B.
- Disassembly of USB P.C.B.
- Disassembly of CD Lid
- Disassembly of Rear Panel
- Disassembly of Main P.C.B.
- Disassembly of SMPS P.C.B. and Voltage Selector P.C.B.
- Disassembly of CD Mechanism Unit
- Disassembly of CD Interface P.C.B.
- Disassembly of Fan Unit

## 10.1. Screw Types

**CAUTION NOTE:**
Please use original screw and at correct locations.

Below shown is part no. of different screw types used:

| | |
|---|---|
| a :RHD30007-K2J | e :RHD26043-1 |
| b :RHD30119-S | f :RHDX30005-J |
| c :RHD26046-L | g :RHDX031008 |
| d :RHD30111-31 | h :XTN2+6GFJ |

## 10.2. Disassembly Flow Chart

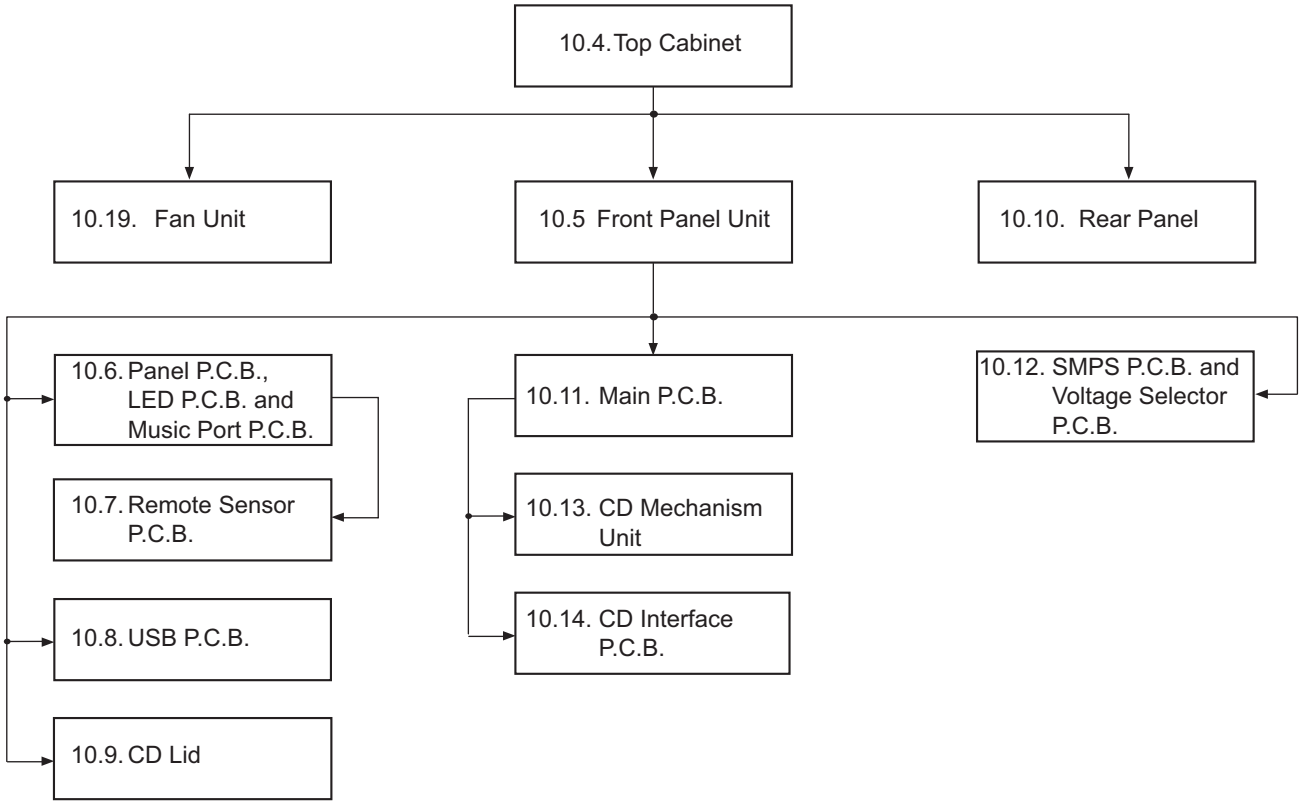

## 10.3. Main Components and P.C.B. Locations

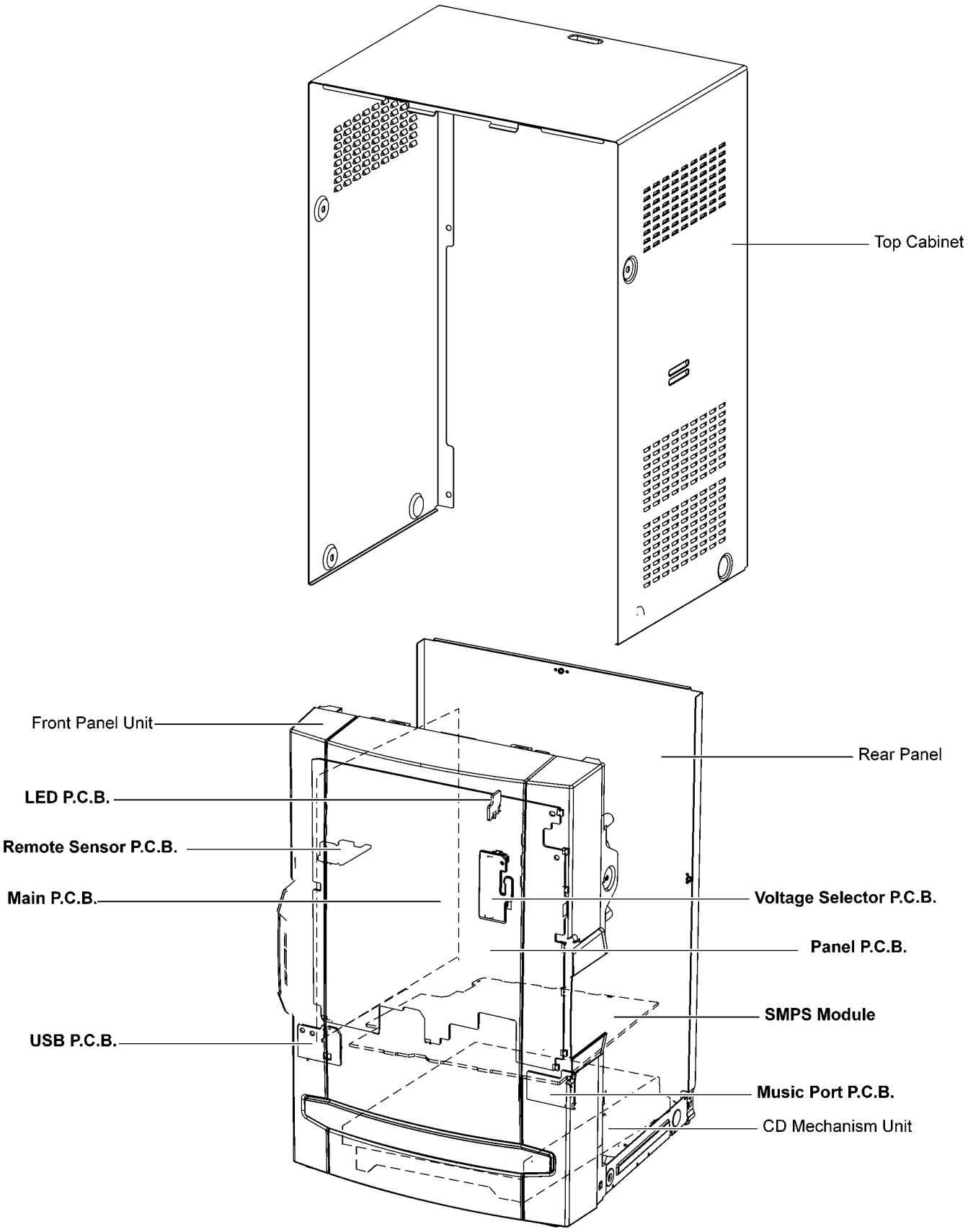

## 10.4. Disassembly of Top Cabinet

**Step 1** Remove 2 screws on each side.

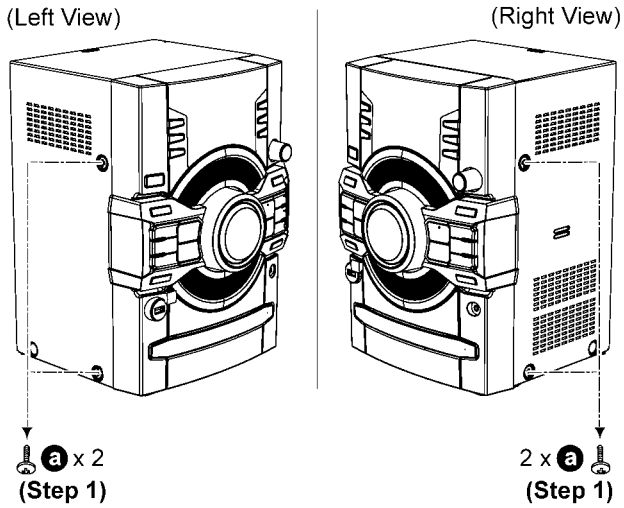


**Step 2** Remove 5 screws.
**Step 3** Slightly release both side of Top Cabinet outwards as arrow shown.

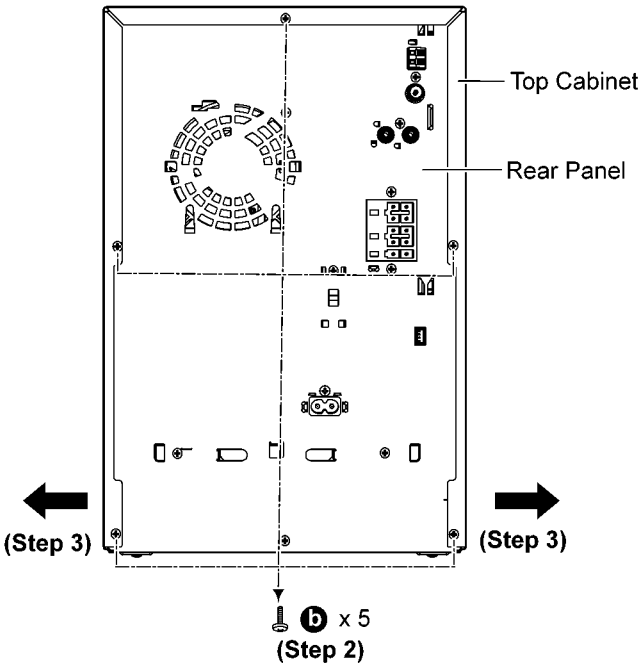


**Step 4** Slightly lift up the Top Cabinet in an outward direction as shown.
**Step 5** Remove the Top Cabinet.

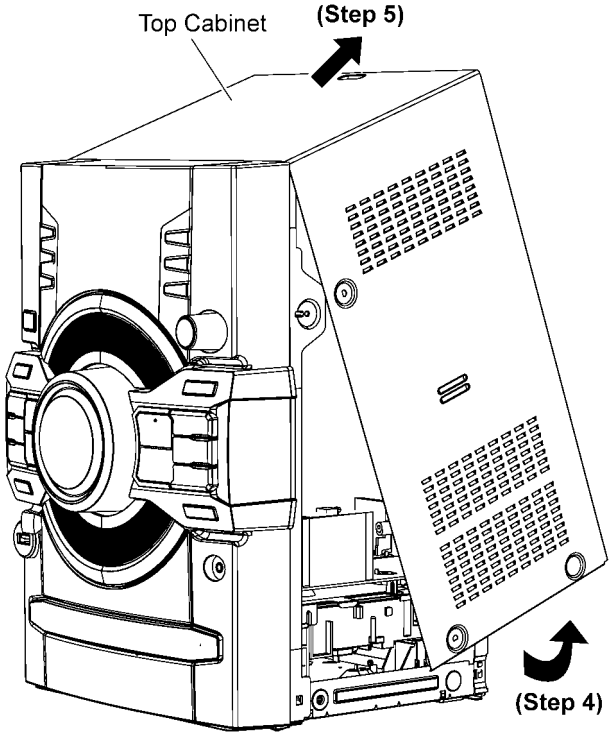


**Caution: During assembling, ensure that the Top Cabinet catches are properly inserted into the Front Panel Unit.**

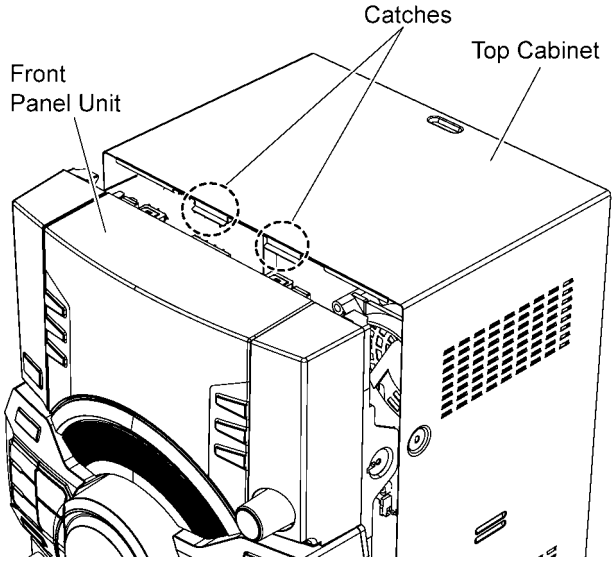

## 10.5. Disassembly of Front Panel Unit

- **Refer to "Disassembly of Top Cabinet".**

**Step 1** Detach 30P FFC at the connector (CN2004) on Main P.C.B..
**Step 2** Detach 5P Cable at the connector (CN2001) on Main P.C.B..
**Step 3** Remove 1 screw.

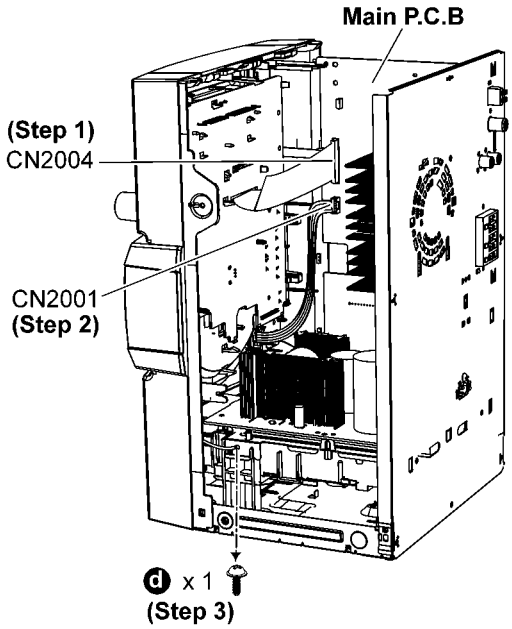


**Step 4** Release tab at the left side of the Front Panel Unit.

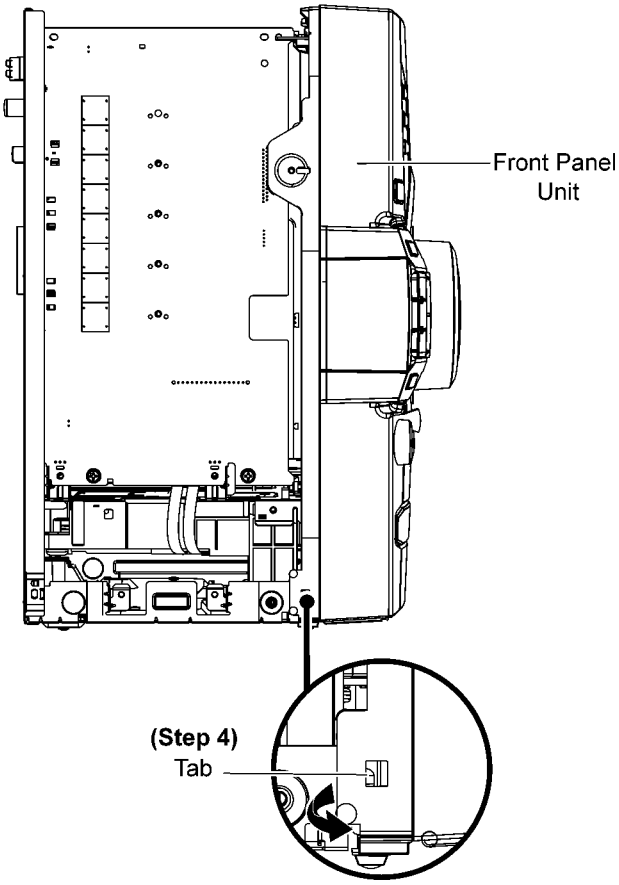


**Step 5** Release tab at the right side of the Front Panel Unit.

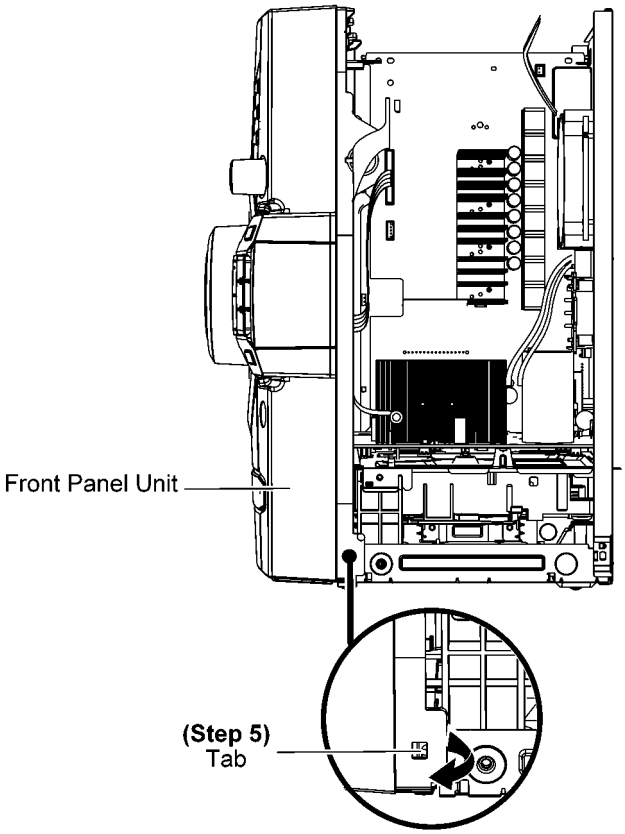


**Step 6** Release tabs at bottom.

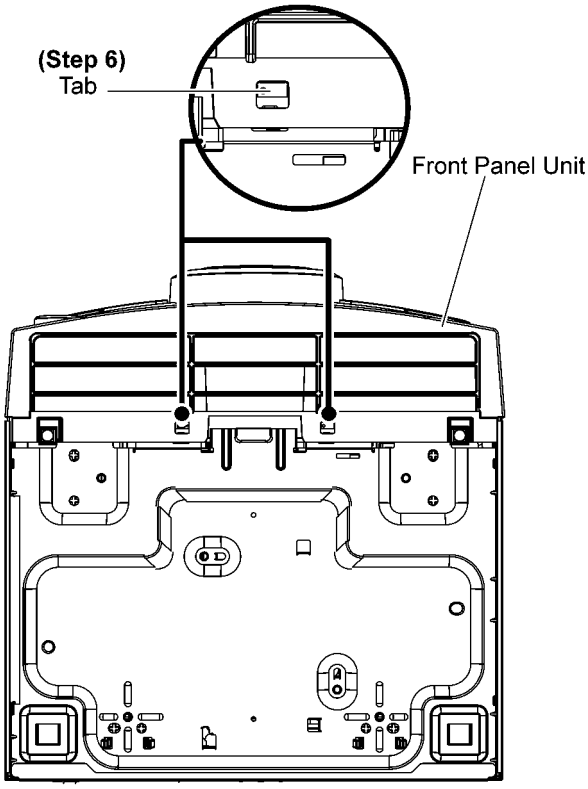

**Step 7** Detach the Front Panel Unit as arrow shown.

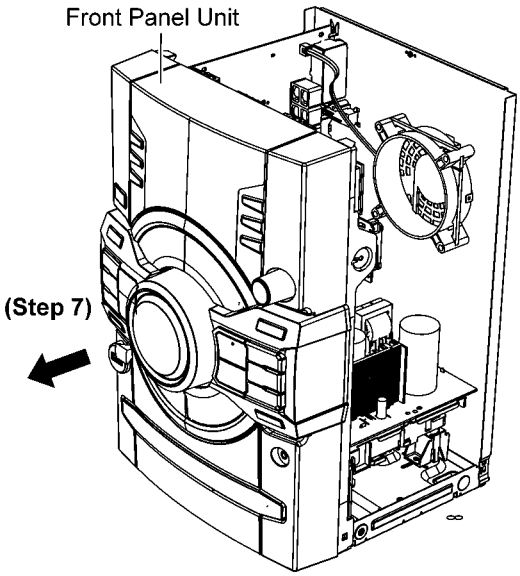


## 10.6. Disassembly of Panel P.C.B., LED P.C.B. and Music Port P.C.B.

- **Refer to "Disassembly of Top Cabinet".**
- **Refer to "Disassembly of Front Panel Unit".**

**Step 1** Remove the Volume Knob.
**Step 2** Remove the Control Knob.

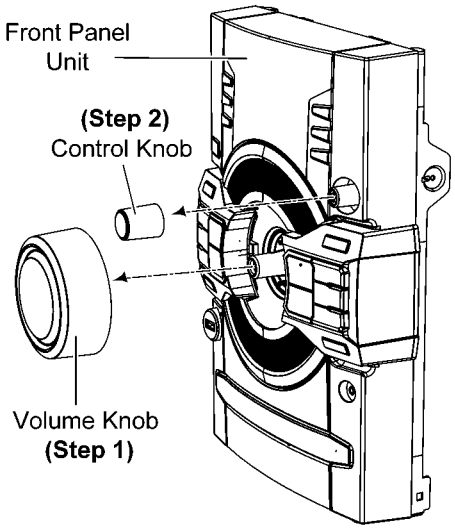


**Step 3** Remove 7 screws.

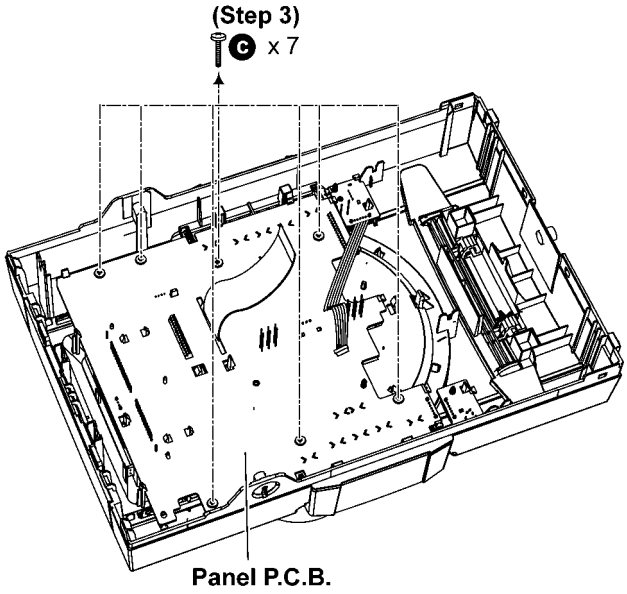


**Step 4** Release catches by following the sequences (1-9).

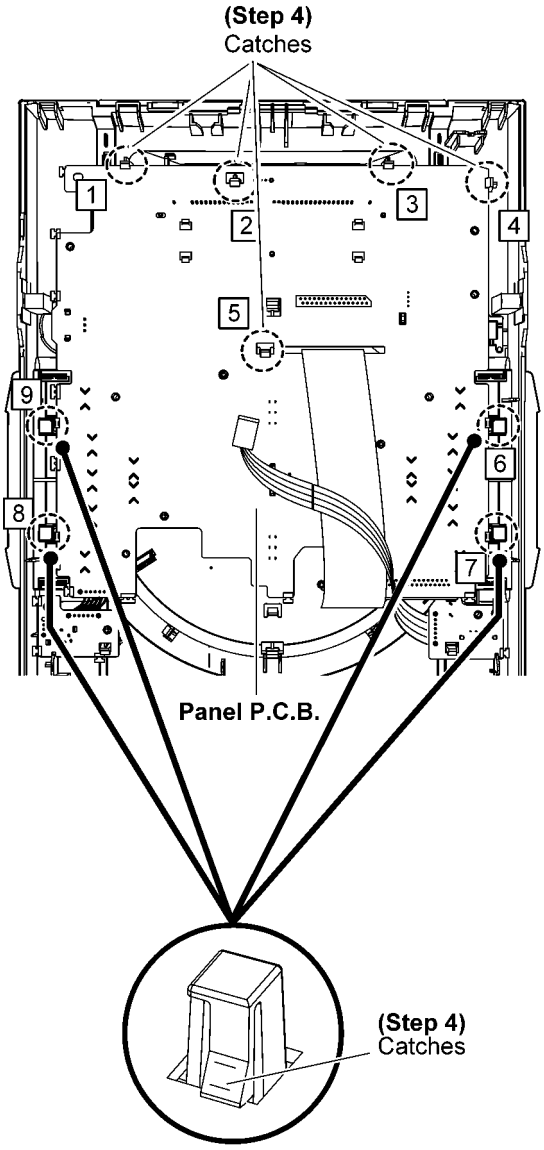

**Step 5** Lift up the Panel P.C.B. and LED P.C.B. from the Front Panel Unit.

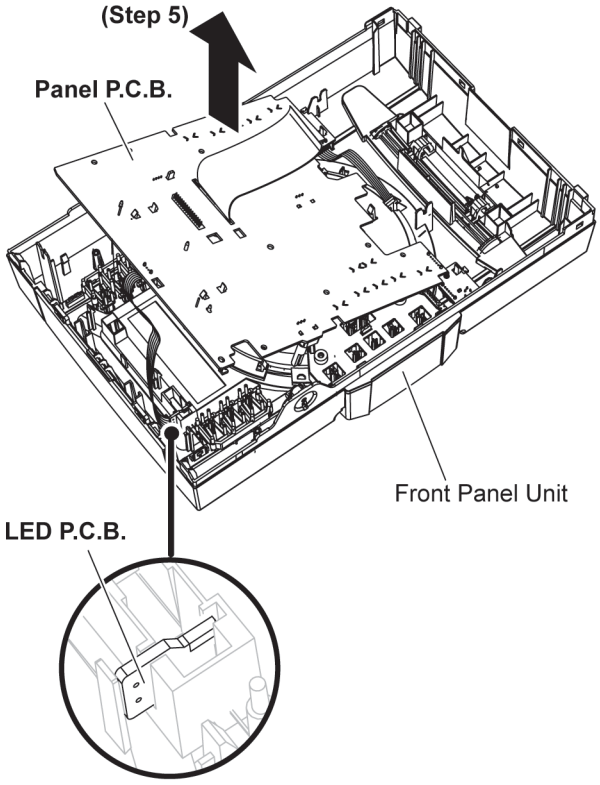


**Caution: During assembling, ensure that the LED P.C.B. is properly insert to the Front Panel Unit.**

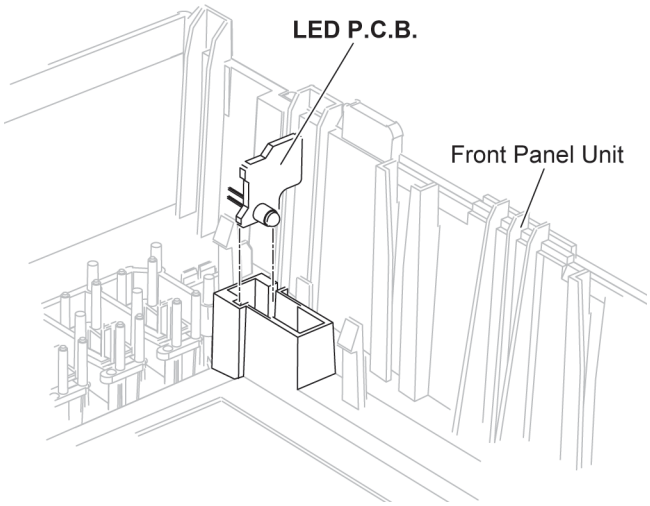


**Caution: During assembling, ensure that the Panel P.C.B. is seated properly onto the locators & fully catched.**

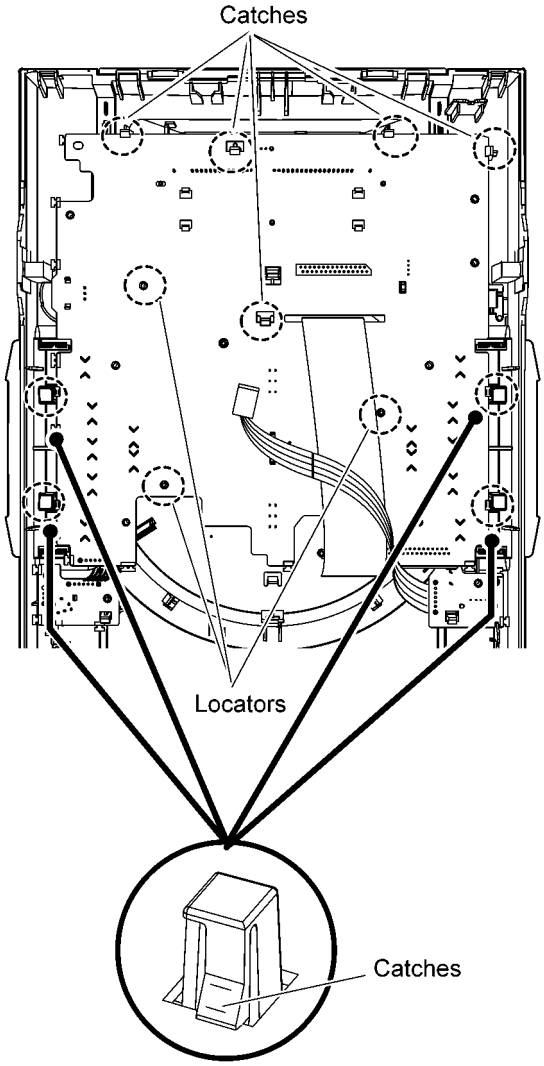


**Step 6** Remove 1 screw.
**Step 7** Release 1 catch.
**Step 8** Remove the Panel P.C.B., LED P.C.B. and Music Port P.C.B..

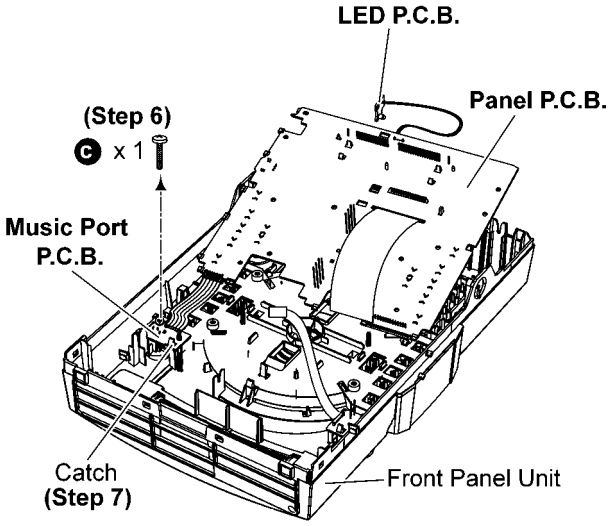

**Caution: During assembling, ensure that the Music Port P.C.B. is seated properly into the locators & fully catched.**

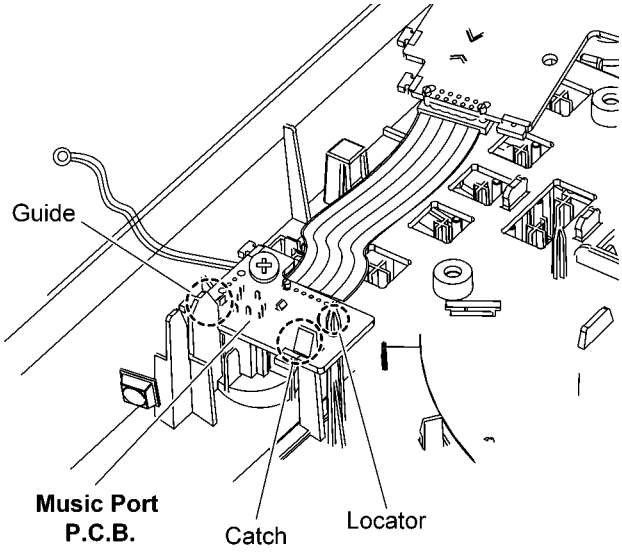


## 10.7. Disassembly of Remote Sensor P.C.B.

- **Refer to "Disassembly of Top Cabinet".**
- **Refer to "Disassembly of Front Panel Unit".**
- **Refer to "Disassembly of Panel P.C.B., LED P.C.B. and Music Port P.C.B.".**

**Step 1** Remove the Remote Sensor P.C.B..

**Caution: During assembling, ensure that the Remote Sensor P.C.B. is properly inserted to the Panel P.C.B..**

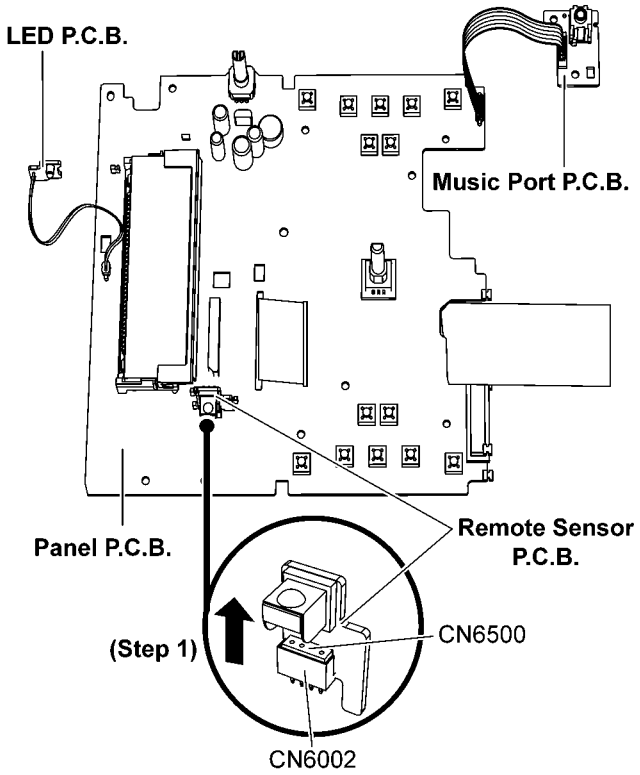


## 10.8. Disassembly of USB P.C.B.

- **Refer to "Disassembly of Top Cabinet".**
- **Refer to "Disassembly of Front Panel Unit".**

**Step 1** Remove 1 screw.
**Step 2** Release 1 catch.
**Step 3** Remove the USB P.C.B..

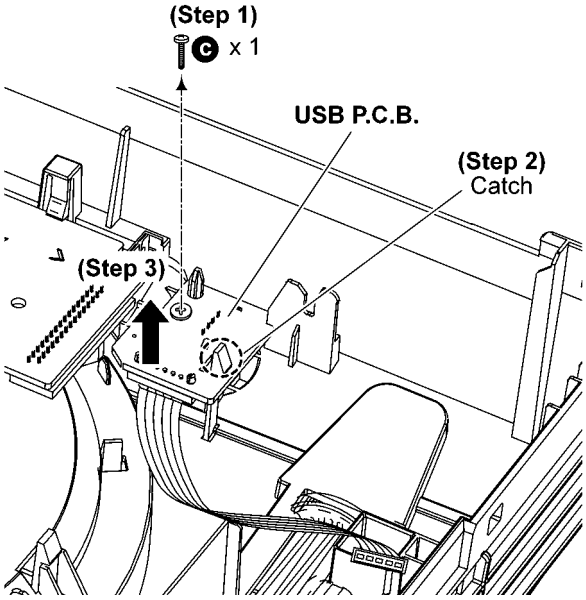


**Caution: During assembling, ensure that the USB P.C.B. is seated properly into the locators & fully catched.**

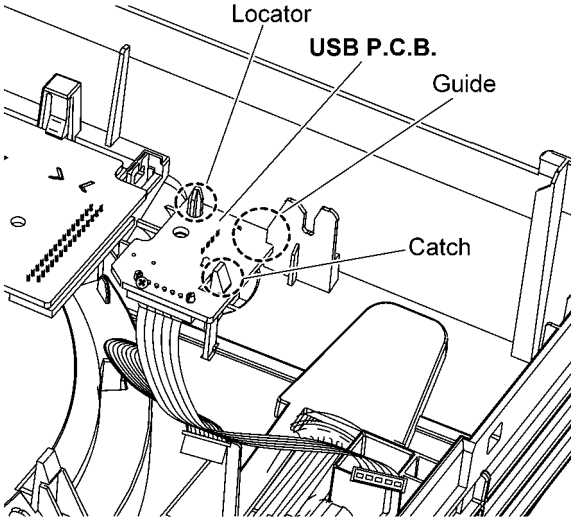

## 10.9. Disassembly of CD Lid

- **Refer to “Disassembly of Top Cabinet”.**
- **Refer to “Disassembly of Front Panel Unit”.**

**Step 1** Remove the spring in order of sequence (1) to (3).
**Caution: During assembling, ensure that the spring is assembly at correct position.**

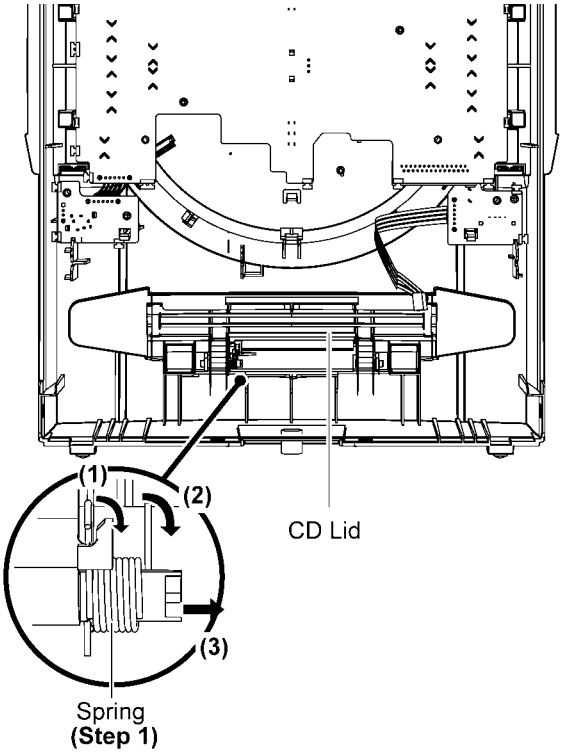


**Step 2** Push the bosses of the CD Lid inwards.
**Step 3** Remove the CD Lid.

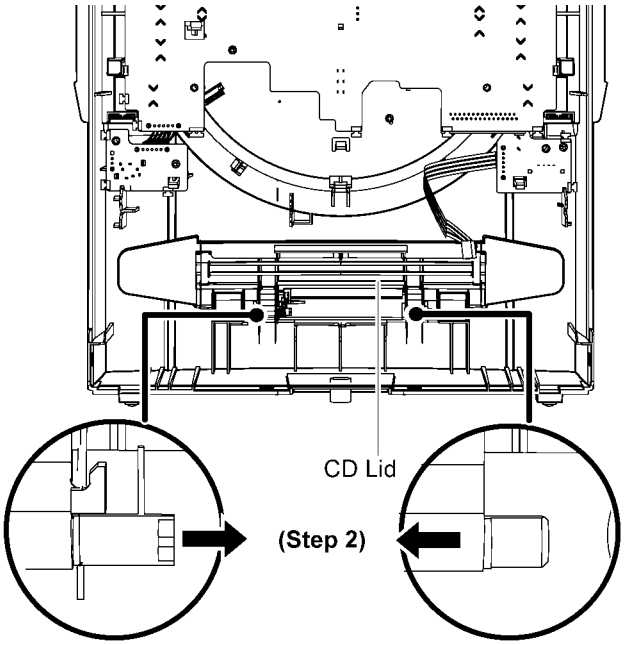


## 10.10. Disassembly of Rear Panel

- **Refer to “Disassembly of Top Cabinet”.**

**Step 1** Remove 10 screws.

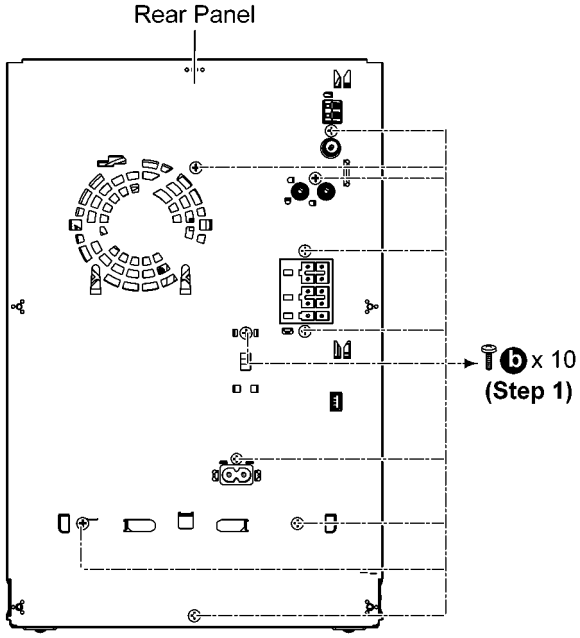


**Step 2** Detach the Voltage Selector P.C.B..
**Step 3** Release catch at the Fan Unit .
**Step 4** Remove the Fan Unit .

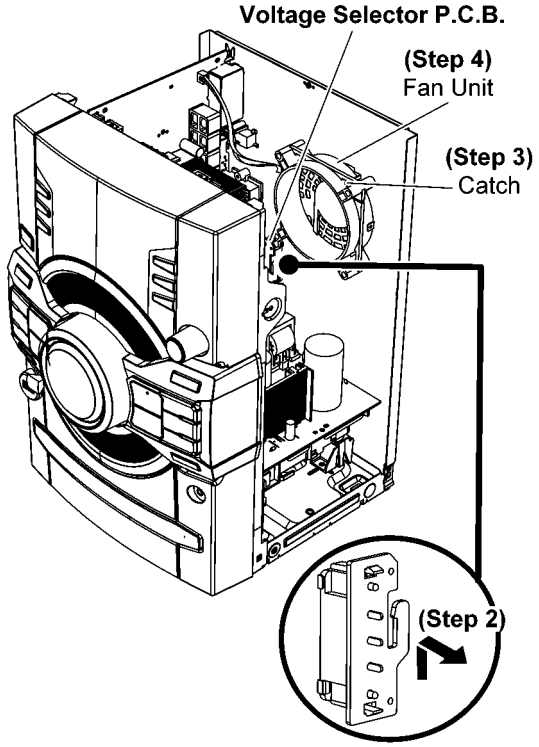

**Step 5** Lift up to remove Inner Chassis Unit from the Rear Panel.

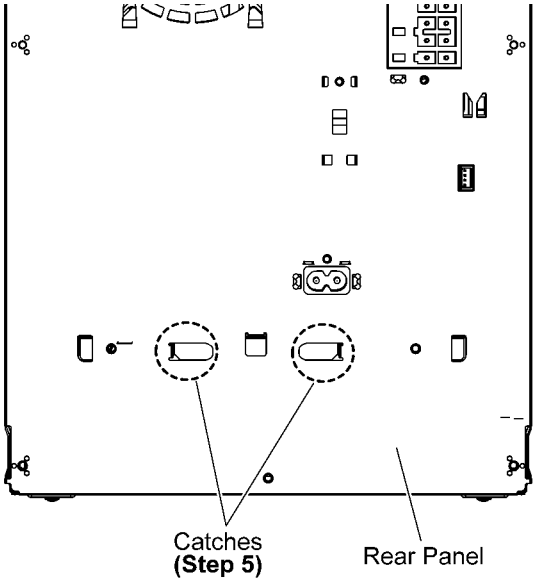


**Step 6** Release 2 tabs.
**Step 7** Remove Rear Panel.

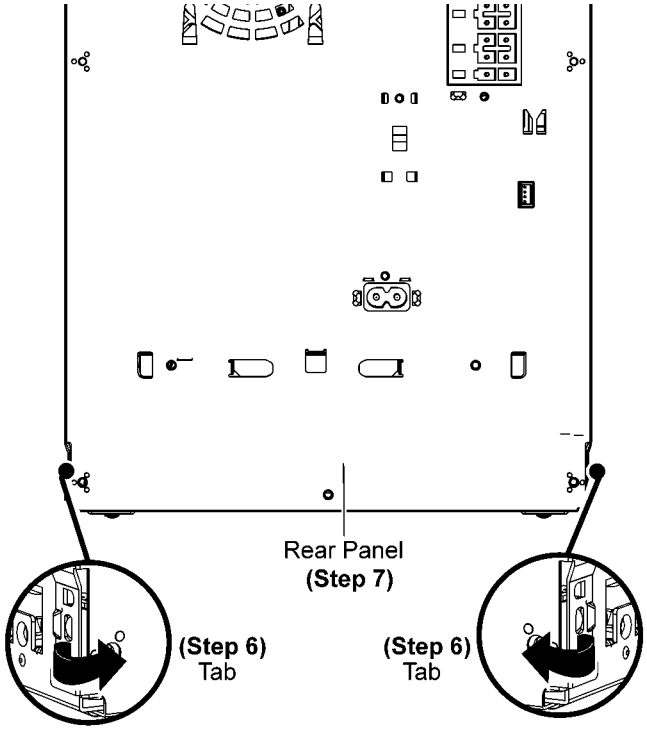


## 10.11. Disassembly of Main P.C.B.

- **Refer to "Disassembly of Top Cabinet".**
- **Refer to "Disassembly of Front panel Unit".**

**Step 1** Detach 2P Wire at the connector (CN2007) on Main P.C.B..
**Step 2** Detach 13P Cable at the connector (CN5802) on SMPS P.C.B..

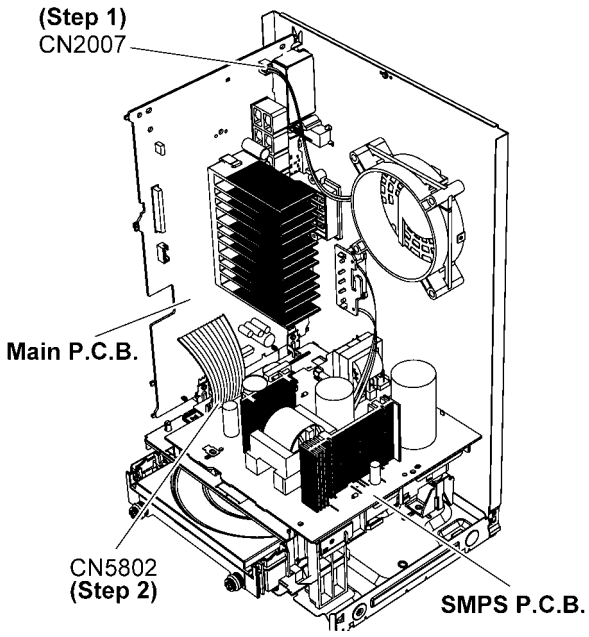


**Step 3** Remove 4 screw.

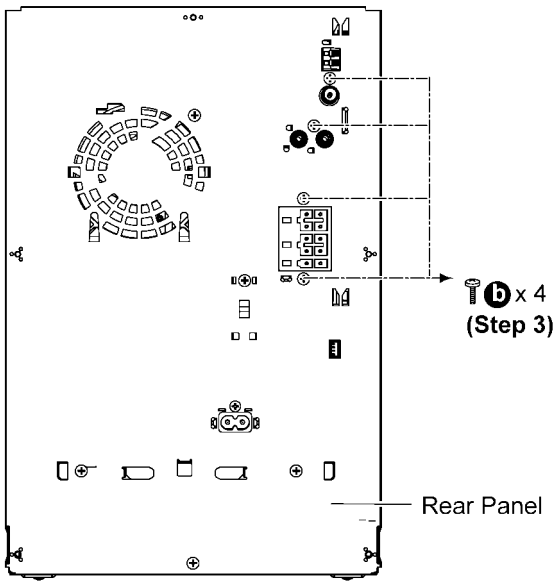

**Step 4** Remove 2 screw.
**Step 5** Lift up the Main P.C.B.from the slots at the Inner Chassis Unit according to arrow shown.

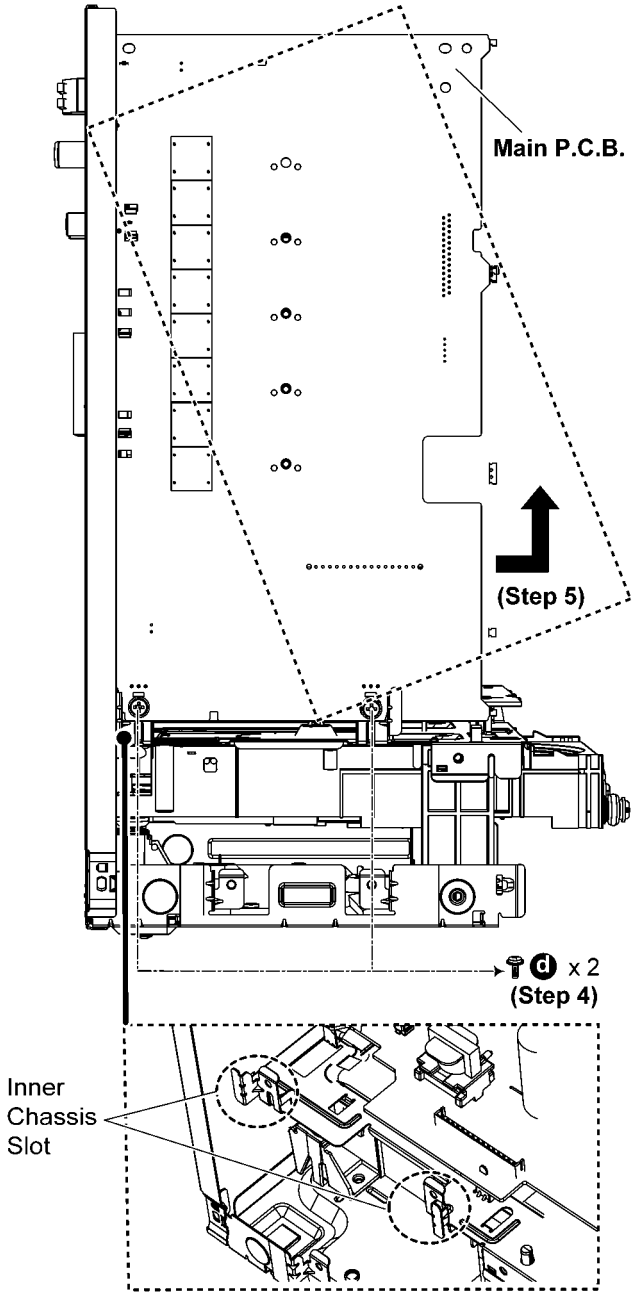


**Step 6** Detach 10P FFC at the connector (FP8251) on the Main P.C.B..
**Step 7** Detach 24P FFC at the connector (FP8201) on the Main P.C.B..
**Step 8** Remove the Main P.C.B..

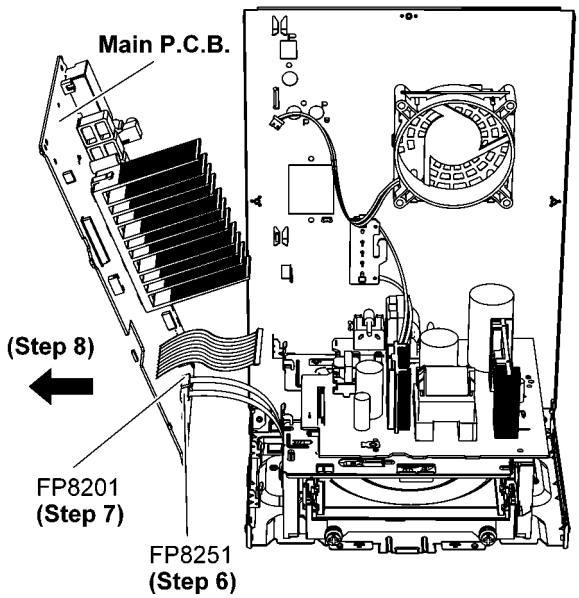

## 10.12. Disassembly of SMPS P.C.B. and Voltage Selector P.C.B.

- **Refer to “Disassembly of Top Cabinet.”.**
- **Refer to “Disassembly of Front Panel Unit”.**

**Step 1** Remove 2 screw.

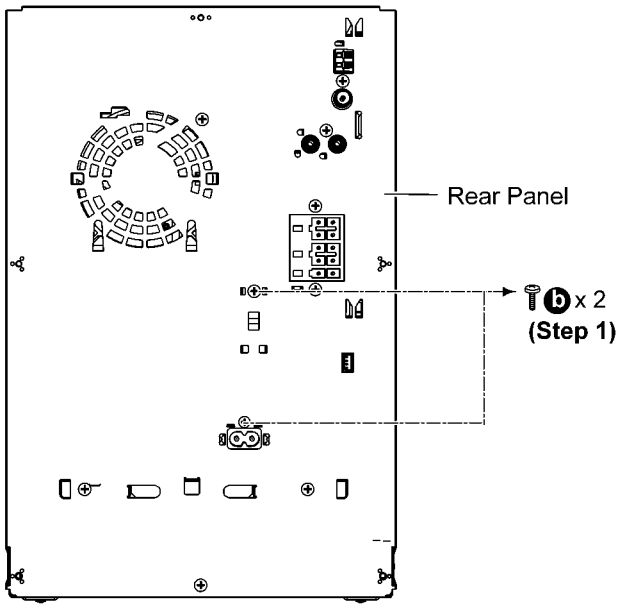


**Step 2** Detach the Voltage Selector P.C.B. from the Rear Panel.
**Step 3** Remove 3 screws.
**Step 4** Detach 13P Cable Wire at the connector (CN5802) on SMPS P.C.B..

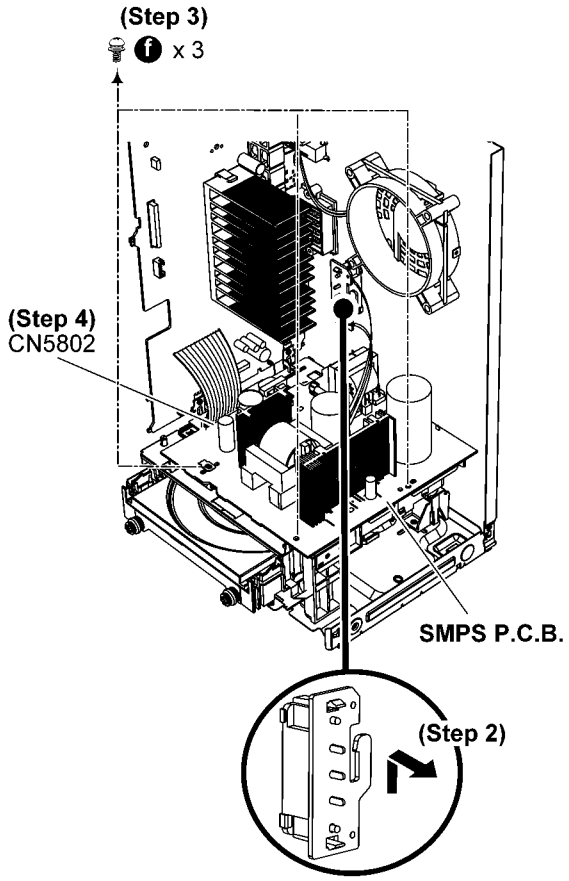


**Step 5** Release the P.C.B. Holder..
**Step 6** Remove the SMPS P.C.B..
**Caution: During assembling, ensure that the SMPS P.C.B. is seated properly onto the locators.**

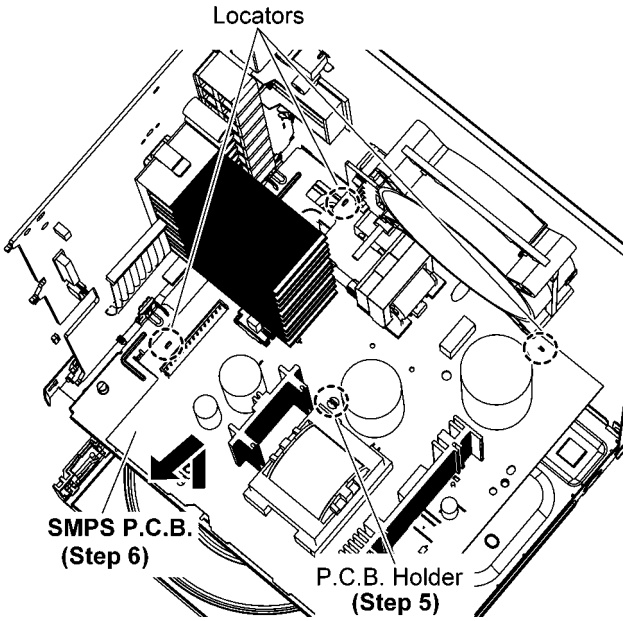


## 10.13. Disassembly of CD Mechanism Unit

- **Refer to “Disassembly of Top Cabinet”.**
- **Refer to “Disassembly of Front Panel Unit”.**
- **Refer to “Disassembly of Main P.C.B”.**

**Step 1** Remove 4 screws.

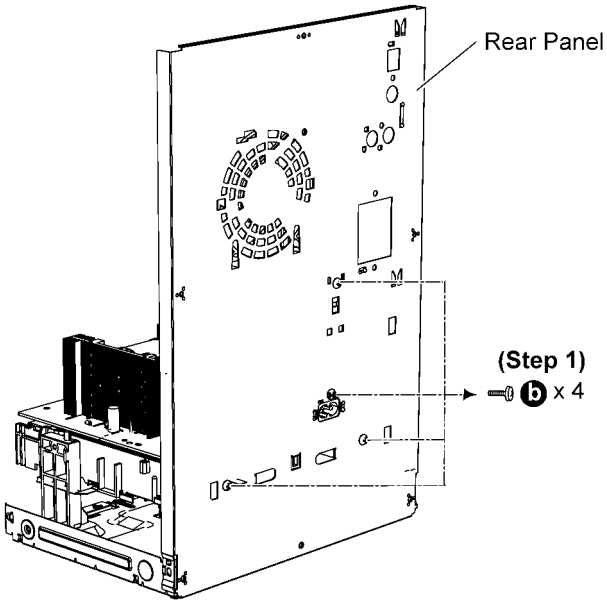

**Step 2** Detach the Voltage Selector P.C.B. from the Rear Panel.
**Step 3** Remove 1 screw.

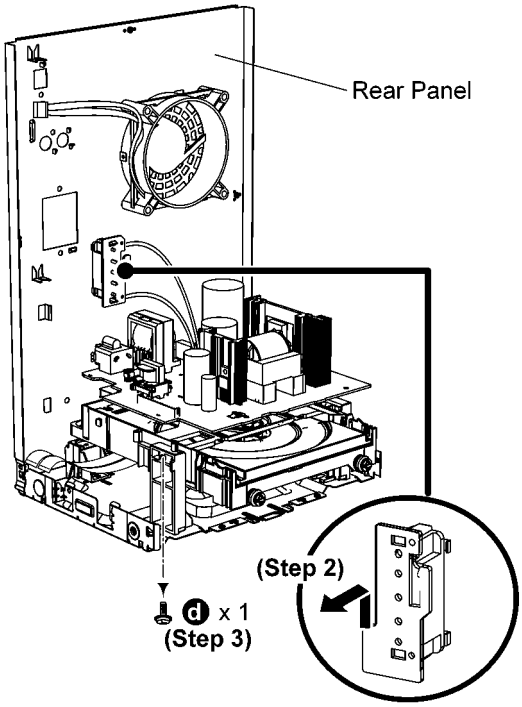


**Step 4** Release 2 catches.
**Step 5** Lift up and remove the Inner Chassis Unit.

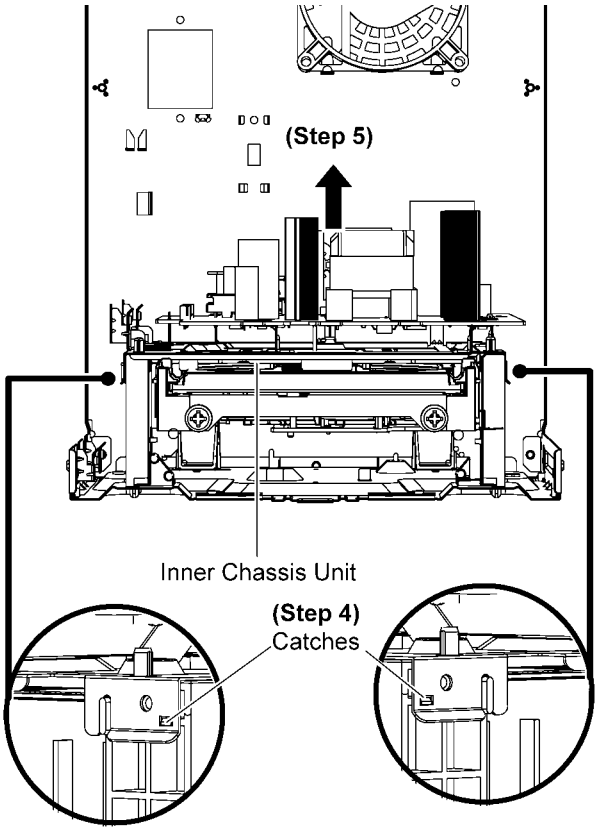


**Caution: During assembling, ensure that Inner Chassis Unit is catched onto Rear Panel properly.**

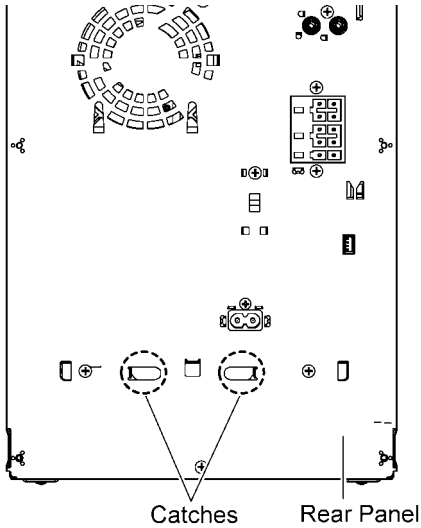


**Step 6** Remove 2 screws.
**Step 7** Remove the CD Mechanism Unit.

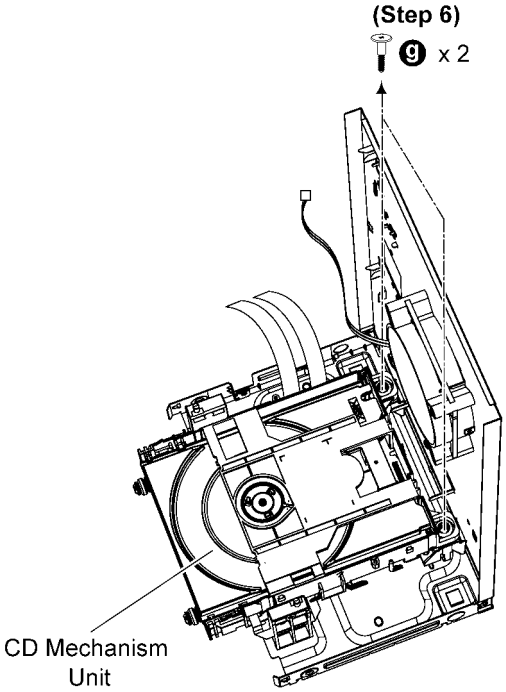

## 10.14. Disassembly of CD Interface P.C.B.

- **Refer to “Disassembly of Top Cabinet”.**
- **Refer to “Disassembly of Front Panel Unit”.**
- **Refer to “Disassembly of Main P.C.B.”.**
- **Refer to “Disassembly of CD Mechanism Unit”.**

**Step 1** Remove 3 screws.
**Step 2** Desolder pins of the motor (M7301).
**Step 3** Desolder pins of the motor (M7302).
**Step 4** Remove the CD Interface P.C.B..

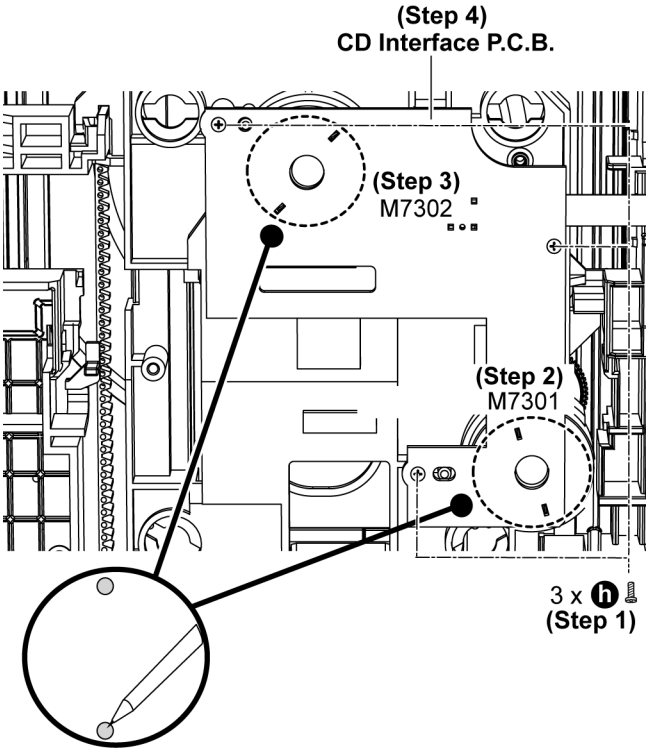


## 10.15. Disassembly of Fan Unit

- **Refer to “Disassembly of Top Cabinet”.**

**Step 1** Remove 1 screw.

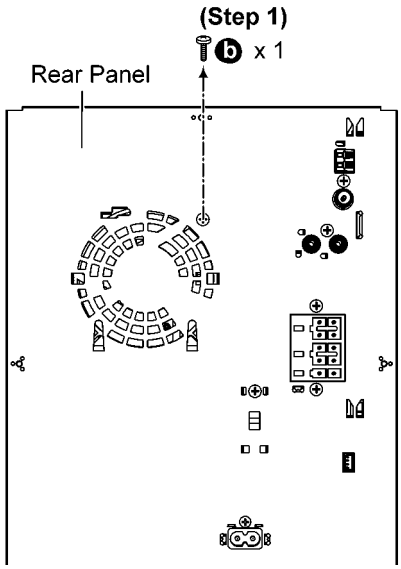


**Step 2** Detach 2P Wire at a connector (CN2007) on the Main P.C.B..
**Step 3** Release 1 catch.
**Step 4** Remove the Fan Unit.
**Caution: During assembling, ensure that the Fan Unit is catched onto the Rear Panel properly.**

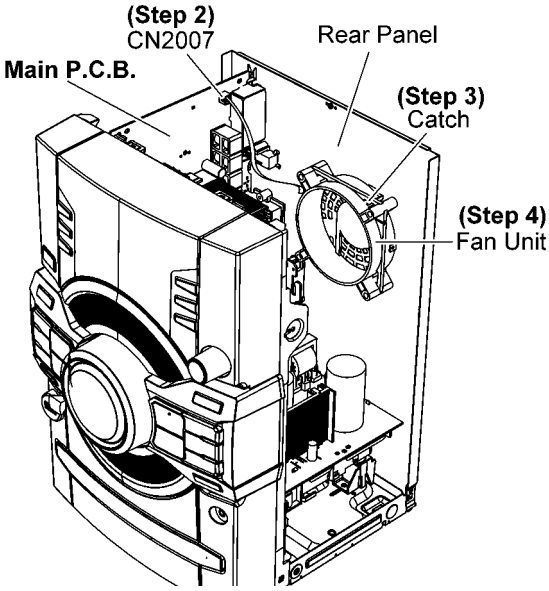

# 11 Service Position

**Note: For description of the disassembly procedures, see the Section 10.**

## 11.1. Checking of Panel P.C.B.

**Step 1** Remove Top Cabinet.
**Step 2** Remove Front Panel Unit.
**Step 3** Positioned the Front panel Unit as shown.
**Step 4** Attach 30P FFC at a connector (CN2004) on the Main P.C.B..
**Step 5** Panel P.C.B. can be checked at diagram shown.

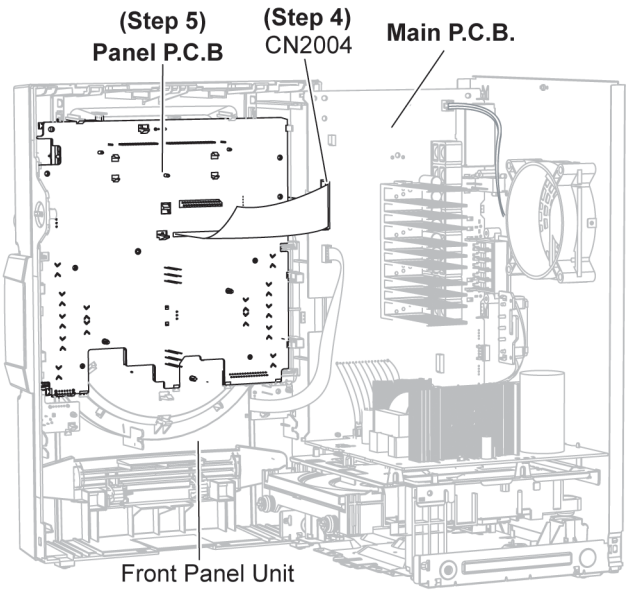


## 11.2. Checking of Main P.C.B. (Side A)

**Step 1** Remove Top Cabinet.
**Step 2** Side A Main P.C.B. can be checked at diagram shown.

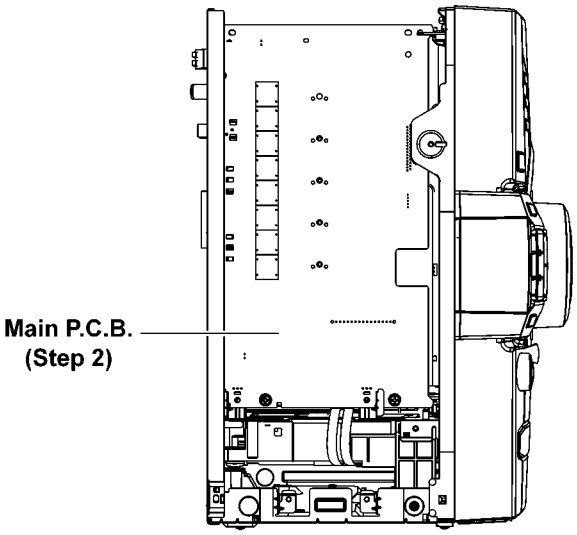


## 11.3. Checking of Main P.C.B. (Side B)

**Step 1** Remove Top Cabinet.
**Step 2** Remove Front Panel Unit.
**Step 3** Remove Main P.C.B..
**Step 4** Place the Main P.C.B. on an insulated material.
**Step 5** Remove 4 screws.

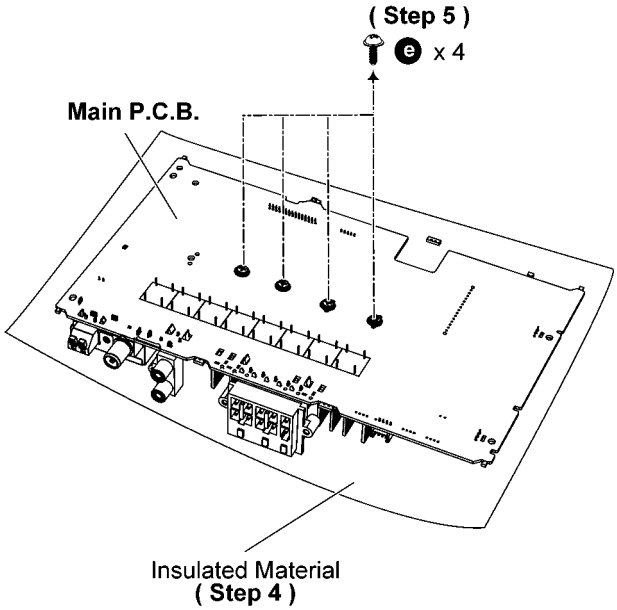


**Step 6** Lift up to remove the Main P.C.B..

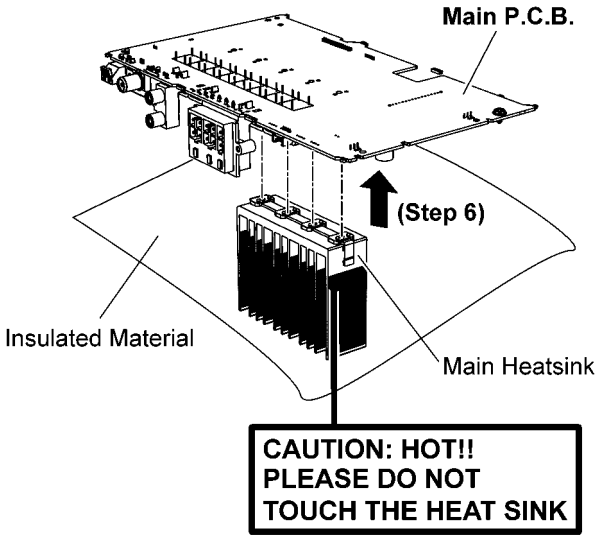

**Step 7** Attach 10P FFC at the connector (FP8251) on the Main P.C.B..
**Step 8** Attch 24P FFC at the connector (FP8201) on the Main P.C.B..

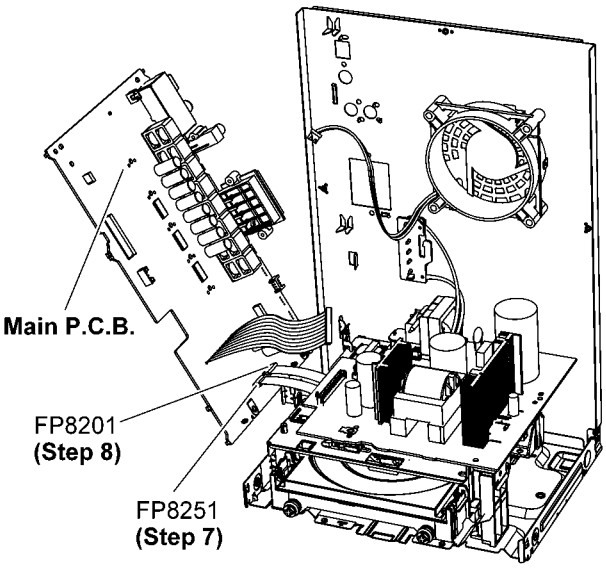


**Step 9** Attach 2P Wire at a connector (CN2007) on the Main P.C.B..
**Step 10** Attach 13P Cable at the connector (CN5802) on the SMPS P.C.B..
**Step 11** Positioned the Front Panel Unit as shown.
**Step 12** Detach 30P FFC at the connector (CN2004) on the Main P.C.B..
**Step 13** Side B Main P.C.B. can be checked at diagram shown.

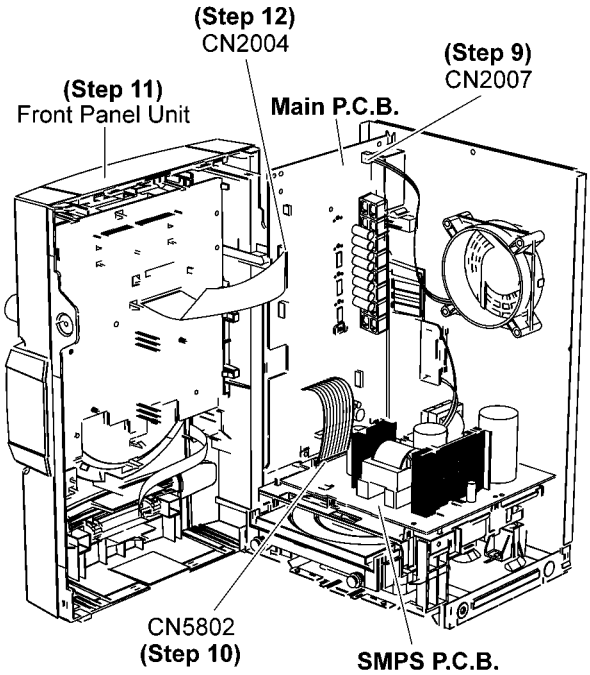


## 11.4. Checking of SMPS P.C.B.

**Step 1** Remove Top Cabinet.
**Step 2** Remove Front Panel Unit.
**Step 3** Remove SMPS P.C.B. and Voltage Selector P.C.B..
**Step 4** Place the Front Panel Unit as diagram shown.
**Step 5** Attach 30P FFC to the connector (CN2004) on the Main P.C.B..
**Step 6** Place the SMPS P.C.B. and Voltage Selector P.C.B. on the insulated material.
**Step 7** Attach 13P Cable to the connector (CN5802) on the SMPS P.C.B..
**Step 8** SMPS P.C.B. can be checked as diagram shown.

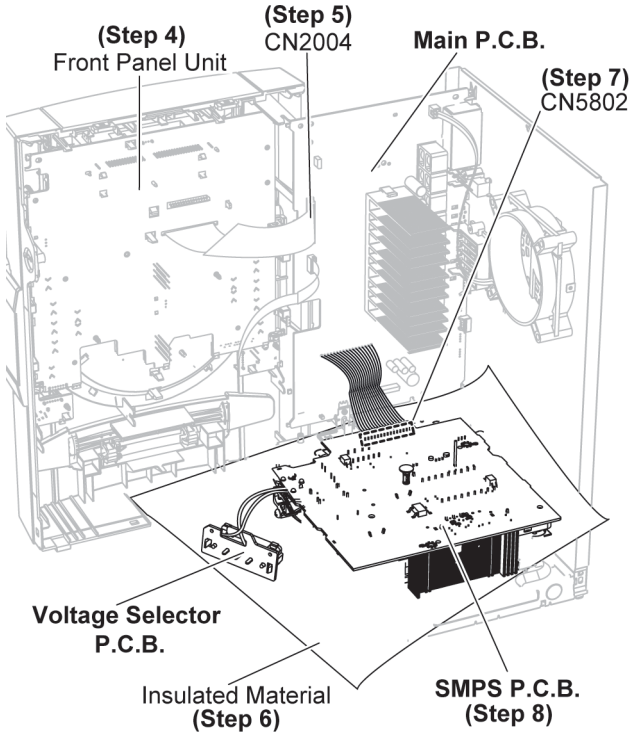

# 12 Block Diagram

## 12.1. Servo & System Control

: CD AUDIO INPUT SIGNAL LINE  : AUDIO OUTPUT SIGNAL LINE  : USB SIGNAL LINE

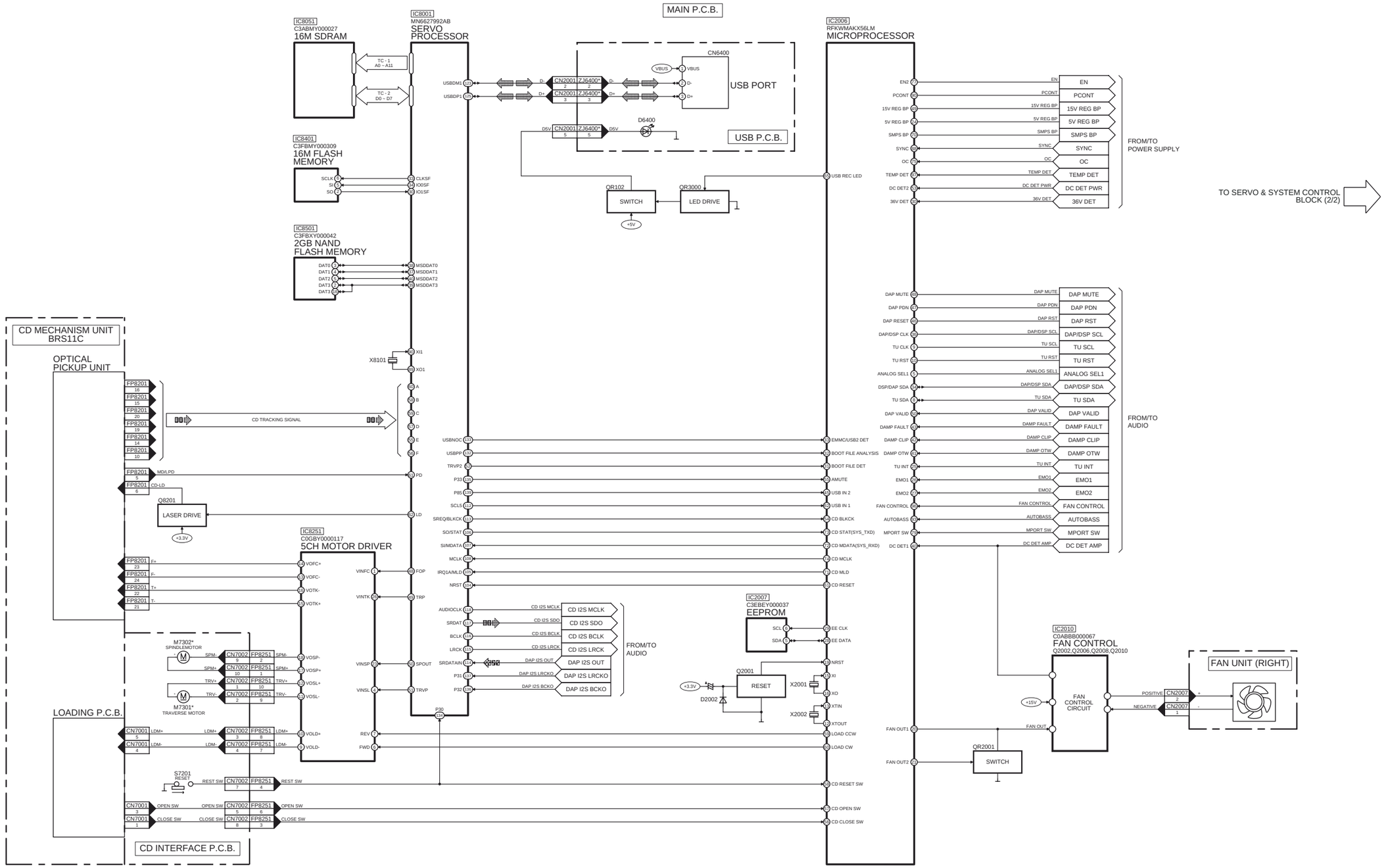


NOTE: " * " REF IS FOR INDICATION ONLY

SA-AKX76PH/PN SERVO & SYSTEM CONTROL (1/2) BLOCK DIAGRAM

: CD AUDIO INPUT SIGNAL LINE  : AUDIO OUTPUT SIGNAL LINE  : USB SIGNAL LINE

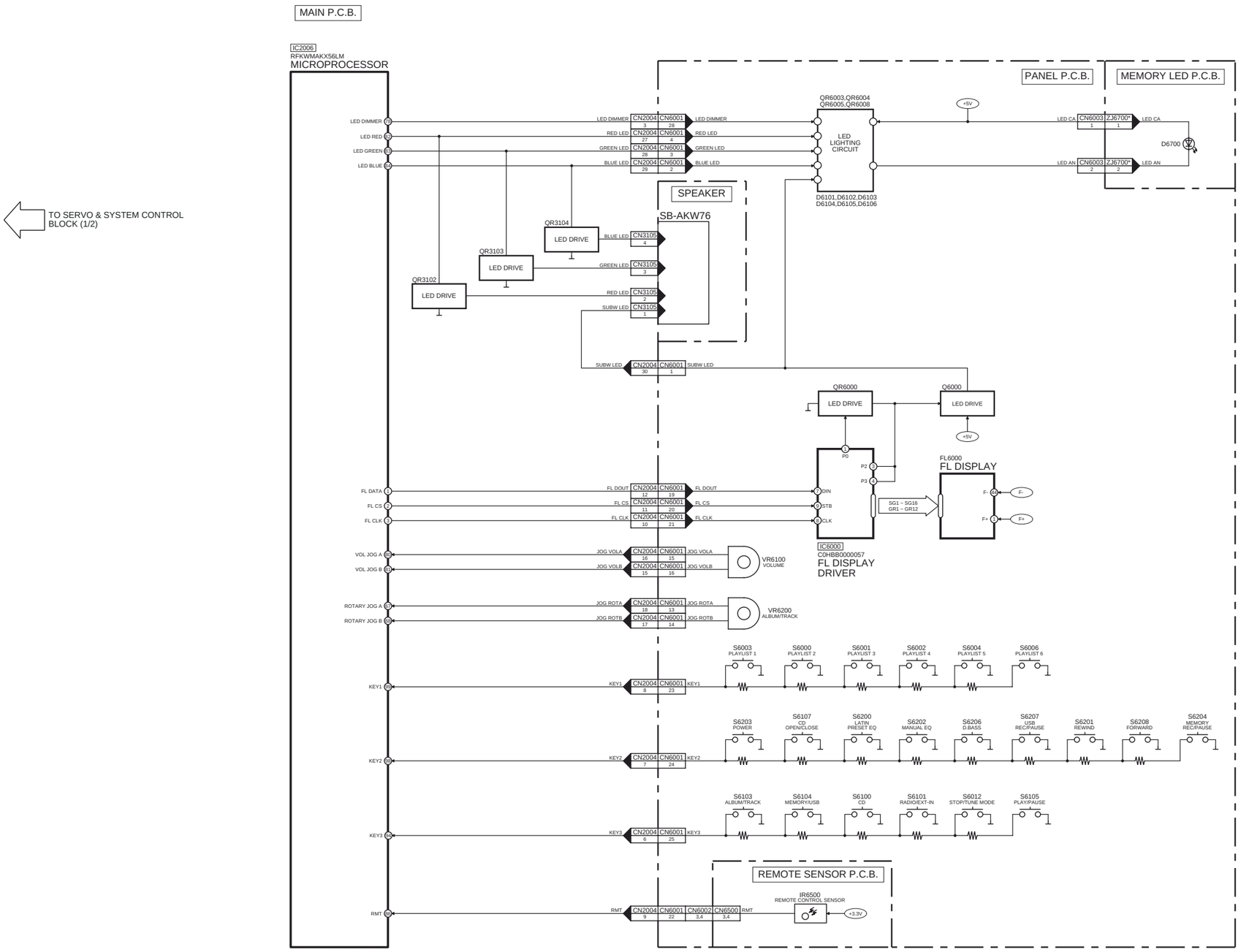


NOTE: " * " REF IS FOR INDICATION ONLY

SA-AKX76PH/PN SERVO & SYSTEM CONTROL (2/2) BLOCK DIAGRAM

## 12.2. Audio

: CD AUDIO INPUT SIGNAL LINE  : TUNER/MUSIC PORT/AUX AUDIO INPUT SIGNAL LINE  : AUDIO OUTPUT SIGNAL LINE  : AM SIGNAL LINE  : FM SIGNAL LINE

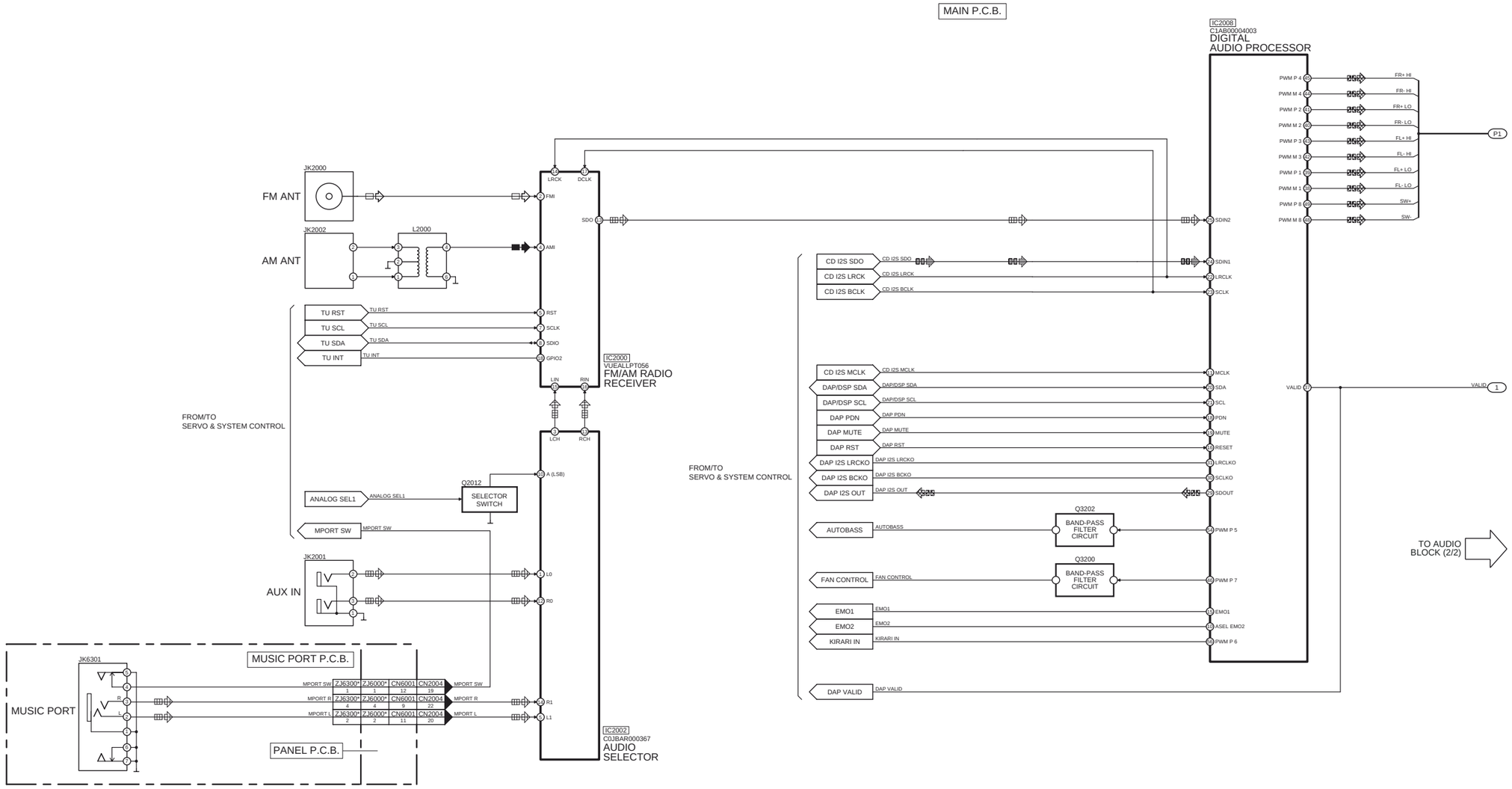


NOTE: " * " REF IS FOR INDICATION ONLY

SA-AKX76PH/PN AUDIO (1/2) BLOCK DIAGRAM

: CD AUDIO INPUT SIGNAL LINE  : TUNER/MUSIC PORT/AUX AUDIO INPUT SIGNAL LINE  : AUDIO OUTPUT SIGNAL LINE  : AM SIGNAL LINE  : FM SIGNAL LINE

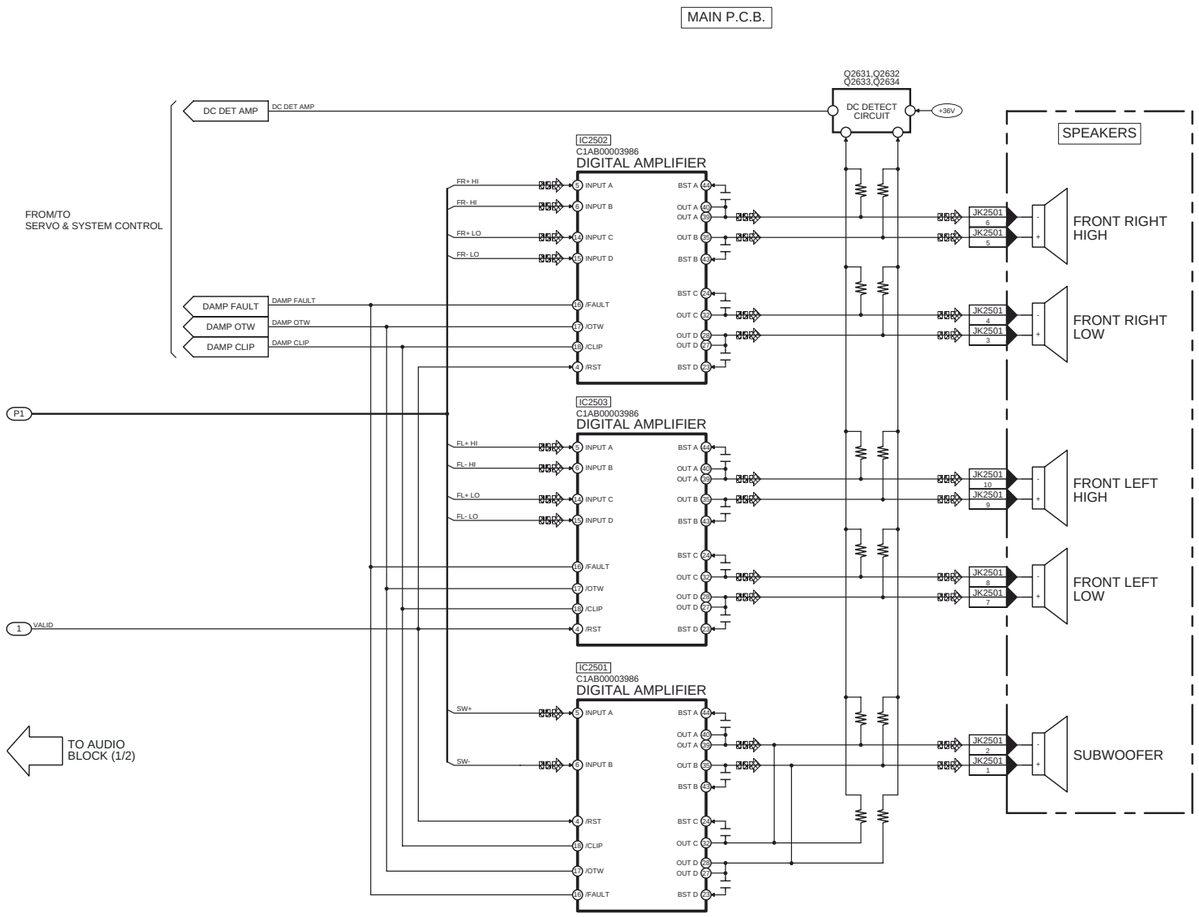


SA-AKX76PH/PN AUDIO (2/2) BLOCK DIAGRAM

## 12.3. Power Supply

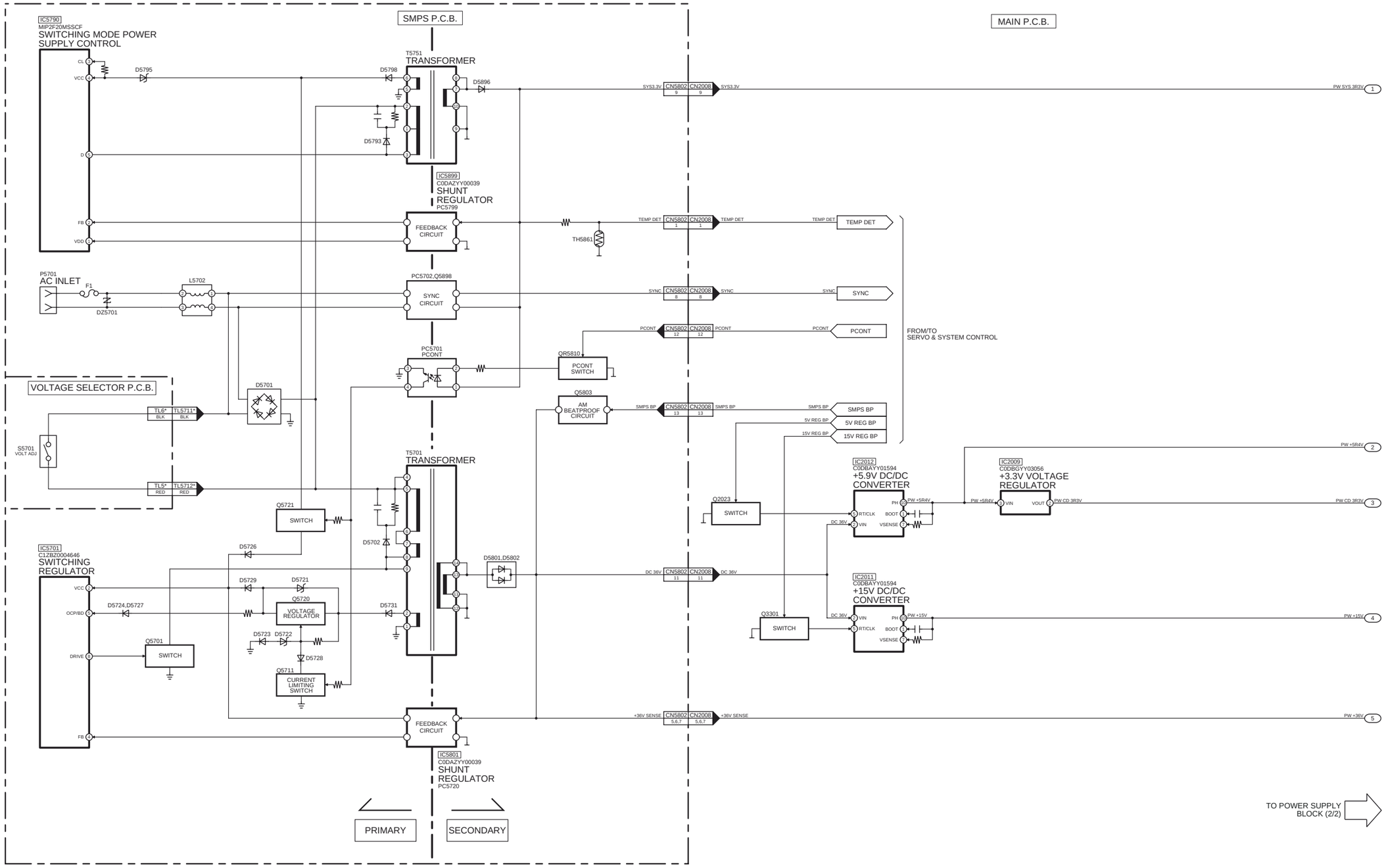


NOTE: " * " REF IS FOR INDICATION ONLY

SA-AKX76PH/PN POWER SUPPLY (1/2) BLOCK DIAGRAM

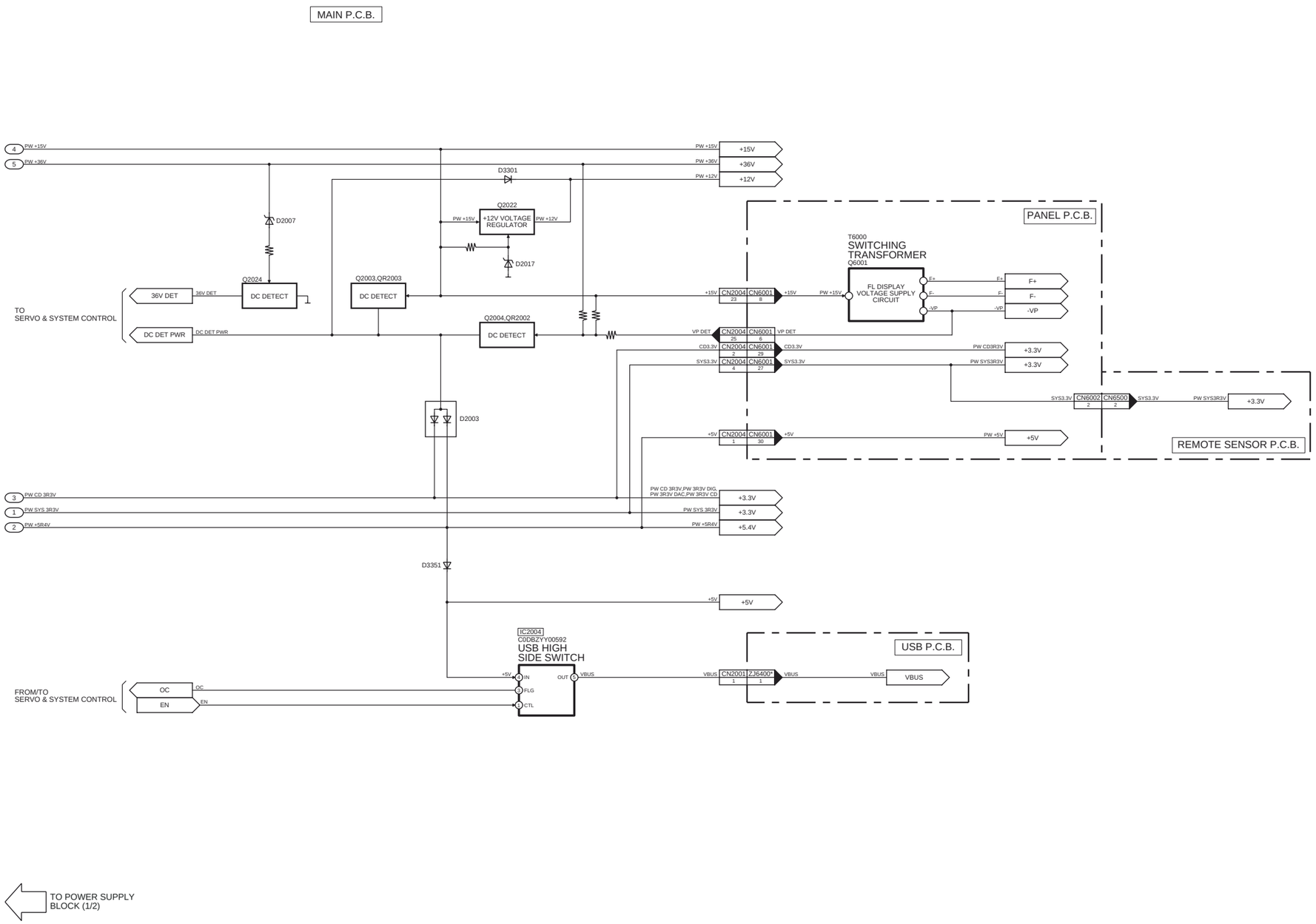


NOTE: " * " REF IS FOR INDICATION ONLY

SA-AKX76PH/PN POWER SUPPLY (2/2) BLOCK DIAGRAM

# 13 Wiring Connection Diagram

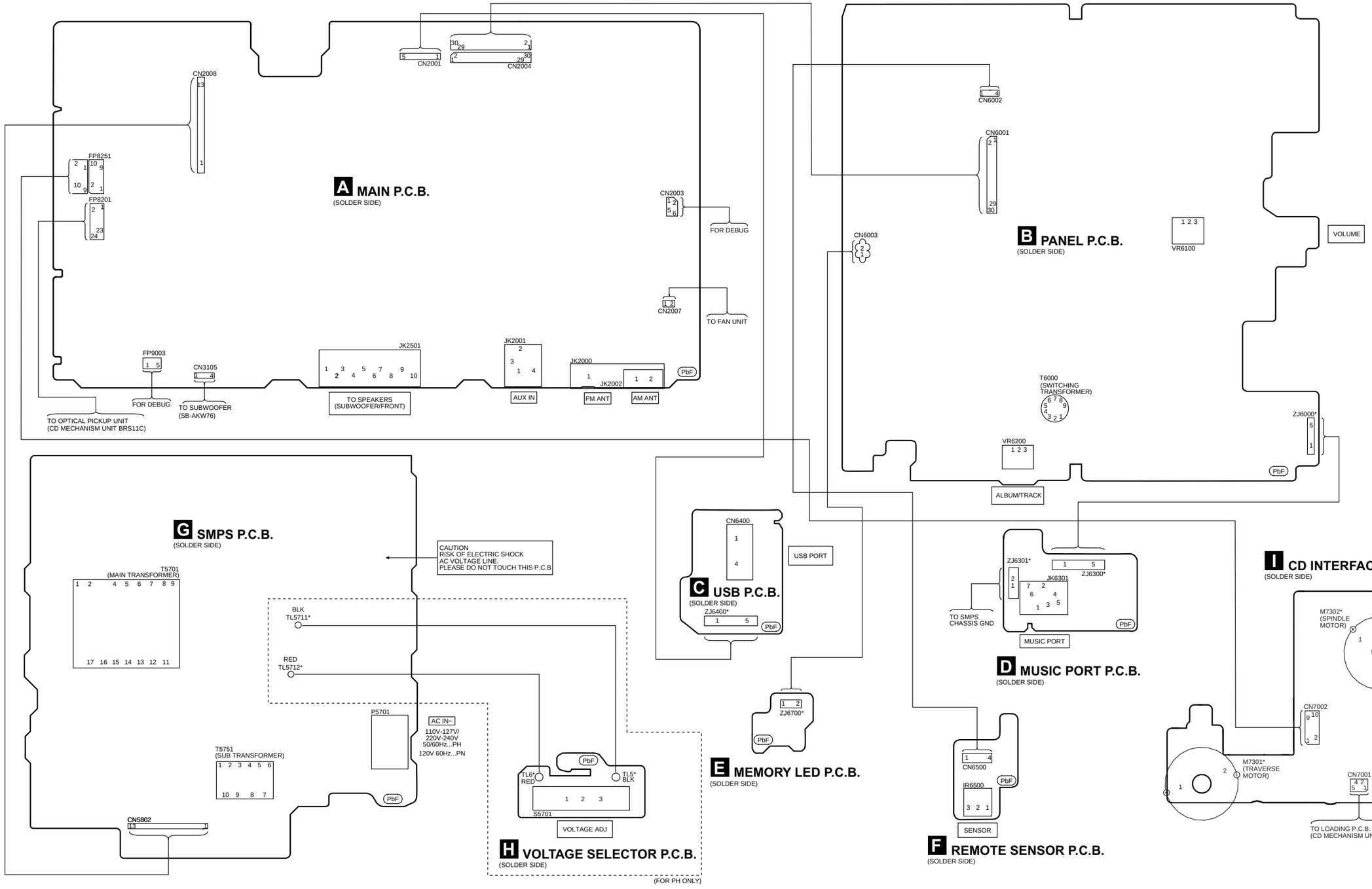


NOTE: " * " REF IS FOR INDICATION ONLY.

SA-AKX76PH/PN WIRING CONNECTION DIAGRAM

# 14 Schematic Diagram

## 14.1. Schematic Diagram Notes

- **This schematic diagram may be modified at any time with the development of new technology.**

**Notes:**

| | |
|---|---|
| **S5701:** | Voltage Selector switch. |
| **S6000:** | Playlist 2 switch. |
| **S6001:** | Playlist 3 switch. |
| **S6002:** | Playlist 4 switch. |
| **S6003:** | Playlist 1 switch. |
| **S6004:** | Playlist 5 switch. |
| **S6006:** | Playlist 6 switch. |
| **S6012:** | Stop (■) switch. |
| **S6100:** | CD switch. |
| **S6101:** | Radio/EXT-IN switch. |
| **S6103:** | Album/Track switch. |
| **S6104:** | Memory/USB switch. |
| **S6105:** | Play/Pause (▶ / ❚❚) switch. |
| **S6107:** | CD Open switch. |
| **S6200:** | Latin/Preset EQ switch. |
| **S6201:** | Rewind (|◀◀ / ◀◀) switch. |
| **S6202:** | Manual EQ switch. |
| **S6203:** | Power (⏻/|) switch. |
| **S6204:** | Memory Rec switch. |
| **S6206:** | D.Bass switch. |
| **S6207:** | USB Rec switch. |
| **S6208:** | Forward (▶▶ / ▶▶|) switch. |
| **S7201:** | Reset switch. |
| **VR6100:** | Volume Jog. |
| **VR6200:** | Control Jog. |

- Important safety notice:

  Components identified by ⚠ mark have special characteristics important for safety.
  Furthermore, special parts which have purposes of fire-retardant (resistors), high quality sound (capacitors), low-noise (resistors), etc are used.
  When replacing any of components, be sure to use only manufacturer's specified parts shown in the parts list.

- In case of AC rated voltage Capacitors, the part no. and values will be indicated in the Schematic Diagram.
  AC rated voltage capacitors:
  C5700, C5701, C5703, C5704 (PN), C5705 (PN), C5706, C5707, C5708

- **Resistor**
  Unit of resistance is OHM [Ω] (K=1,000, M=1,000,000).

- **Capacitor**
  Unit of capacitance is μF, unless otherwise noted. F=Farads, pF=pico-Farad.

- **Coil**
  Unit of inductance is H, unless otherwise noted.

- *****

  REF IS FOR INDICATION ONLY.

- Voltage and signal line

  : +B signal line
  : -B signal line
  : CD Audio input signal line
  : Tuner/Music Port/AUX Audio input signal line
  : Audio output signal line
  : USB signal line
  : AM signal line
  : FM signal line

- For PH only

CAUTION: FOR CONTINUED PROTECTION AGAINST FIRE HAZARD, REPLACE ONLY WITH SAME TYPE F1 T8 AL 250V FUSE

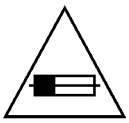

RISK OF FIRE-REPLACE FUSE AS MARKED.

- For PN only

CAUTION: FOR CONTINUED PROTECTION AGAINST FIRE HAZARD, REPLACE ONLY WITH SAME TYPE F1 8A 125V FUSE

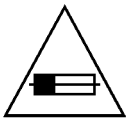

RISK OF FIRE-REPLACE FUSE AS MARKED.

**FUSE CAUTION**

These symbols located near the fuse indicates that the fuse used is a fast operating type. For continued protection againts fire harzard, replace with the same type fuse. fro rating, refer to the marking adjacent to the symbol.

## 14.2. MAIN (CD Servo/Micon/Damp) Circuit

SCHEMATIC DIAGRAM - 1

**A** MAIN (CD SERVO) CIRCUIT

—— : +B SIGNAL LINE  : CD AUDIO INPUT SIGNAL LINE  : AUDIO OUTPUT SIGNAL LINE  : USB SIGNAL LINE

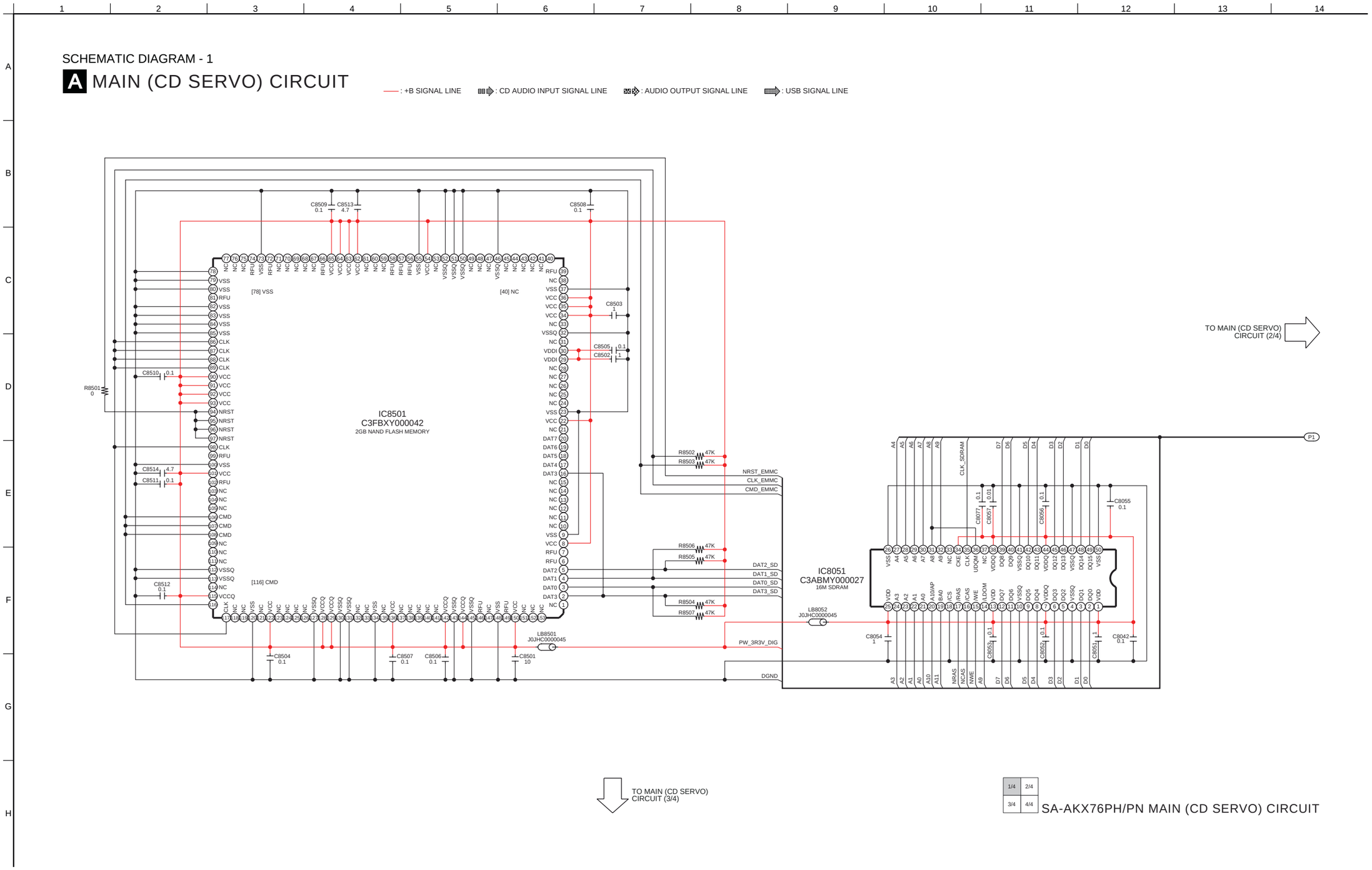


| 1/4 | 2/4 |
|---|---|
| 3/4 | 4/4 |

SA-AKX76PH/PN MAIN (CD SERVO) CIRCUIT

SCHEMATIC DIAGRAM - 2

# A MAIN (CD SERVO) CIRCUIT

: +B SIGNAL LINE  : CD AUDIO INPUT SIGNAL LINE  : AUDIO OUTPUT SIGNAL LINE  : USB SIGNAL LINE

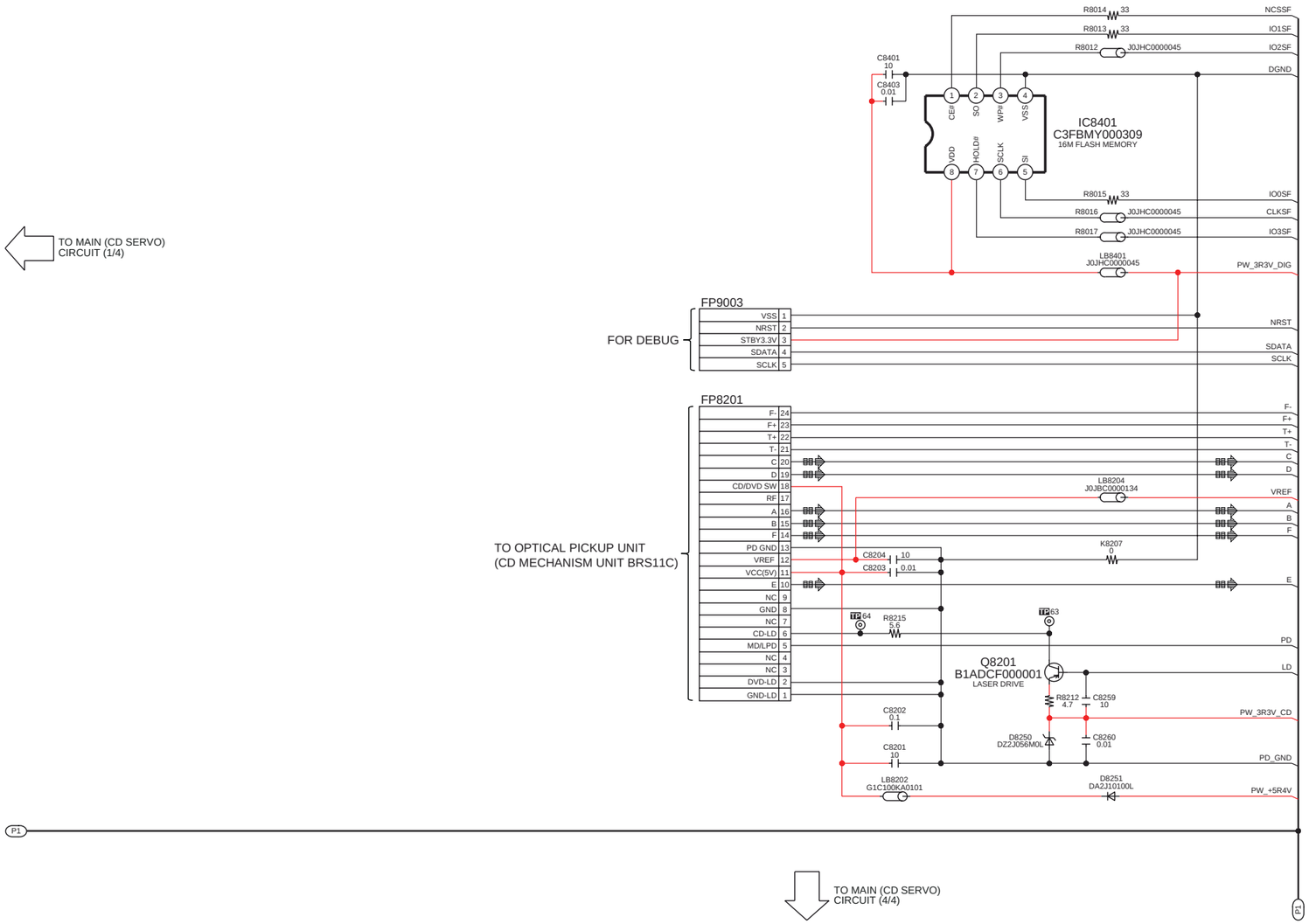


| 1/4 | 2/4 |
|---|---|
| 3/4 | 4/4 |

SA-AKX76PH/PN MAIN (CD SERVO) CIRCUIT

SCHEMATIC DIAGRAM - 3

# A MAIN (CD SERVO) CIRCUIT

—— : +B SIGNAL LINE  : CD AUDIO INPUT SIGNAL LINE  : AUDIO OUTPUT SIGNAL LINE  : USB SIGNAL LINE

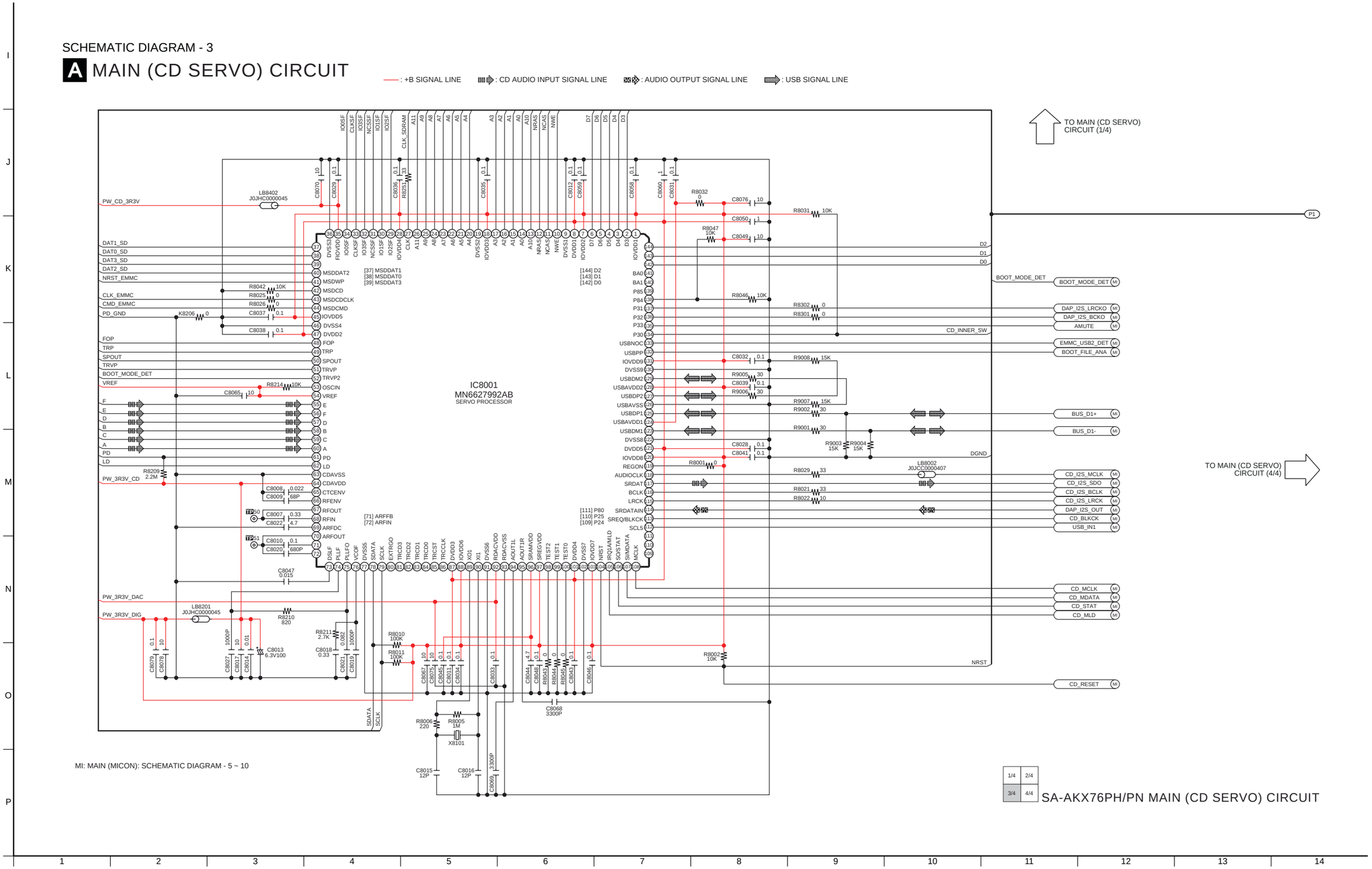


| 1/4 | 2/4 |
|---|---|
| 3/4 | 4/4 |

SA-AKX76PH/PN MAIN (CD SERVO) CIRCUIT

SCHEMATIC DIAGRAM - 4

# A MAIN (CD SERVO) CIRCUIT

—— : +B SIGNAL LINE  : CD AUDIO INPUT SIGNAL LINE  : AUDIO OUTPUT SIGNAL LINE  : USB SIGNAL LINE

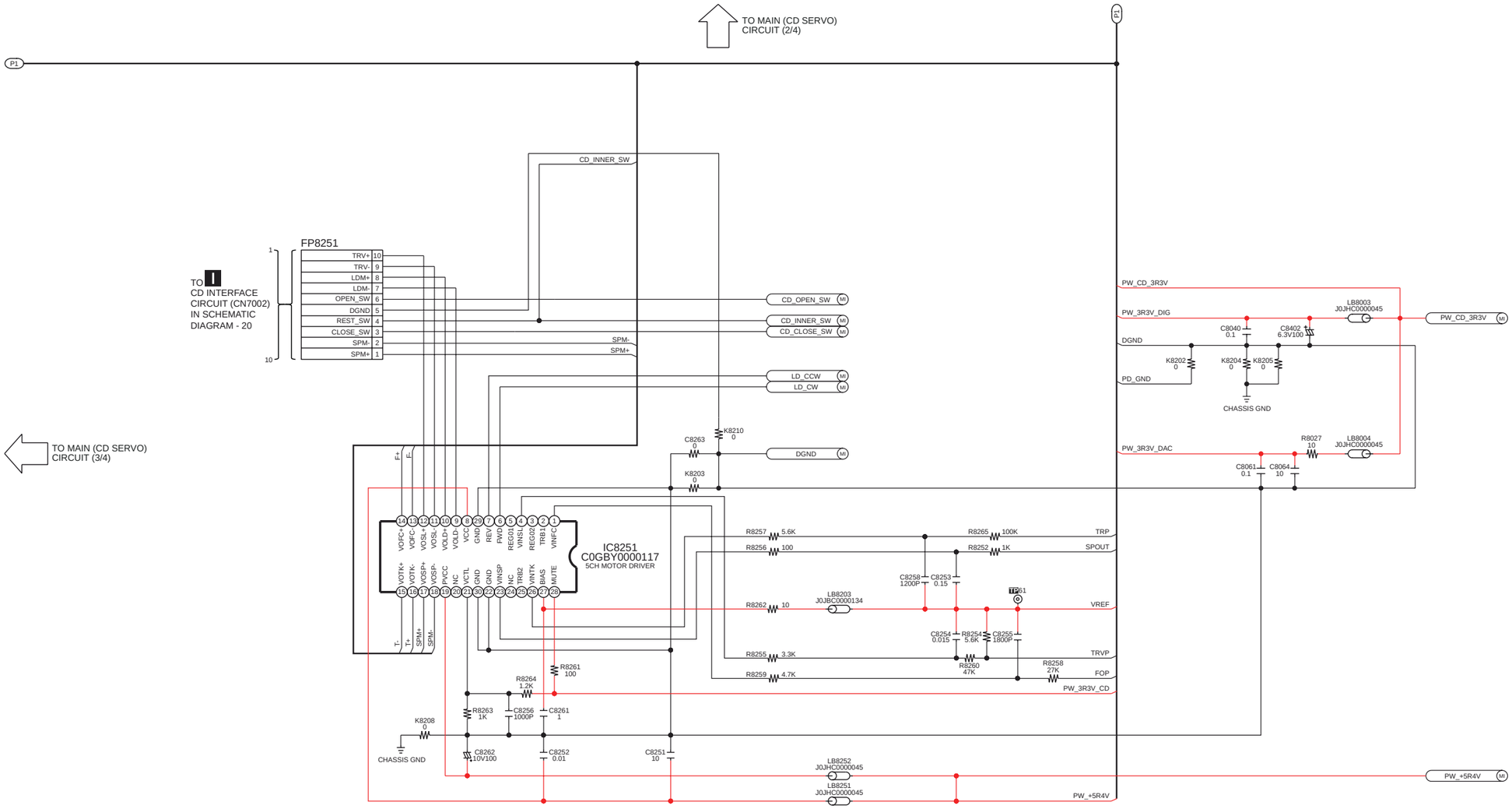


MI: MAIN (MICON): SCHEMATIC DIAGRAM - 5 ~ 10

| 1/4 | 2/4 |
|---|---|
| 3/4 | 4/4 |

SA-AKX76PH/PN MAIN (CD SERVO) CIRCUIT

SCHEMATIC DIAGRAM - 5

# A MAIN (MICON) CIRCUIT

: +B SIGNAL LINE
: -B SIGNAL LINE
: CD AUDIO INPUT SIGNAL LINE
: TUNER/MUSIC PORT/AUX AUDIO INPUT SIGNAL LINE
: AUDIO OUTPUT SIGNAL LINE
: AM SIGNAL LINE
: FM SIGNAL LINE
: USB SIGNAL LINE

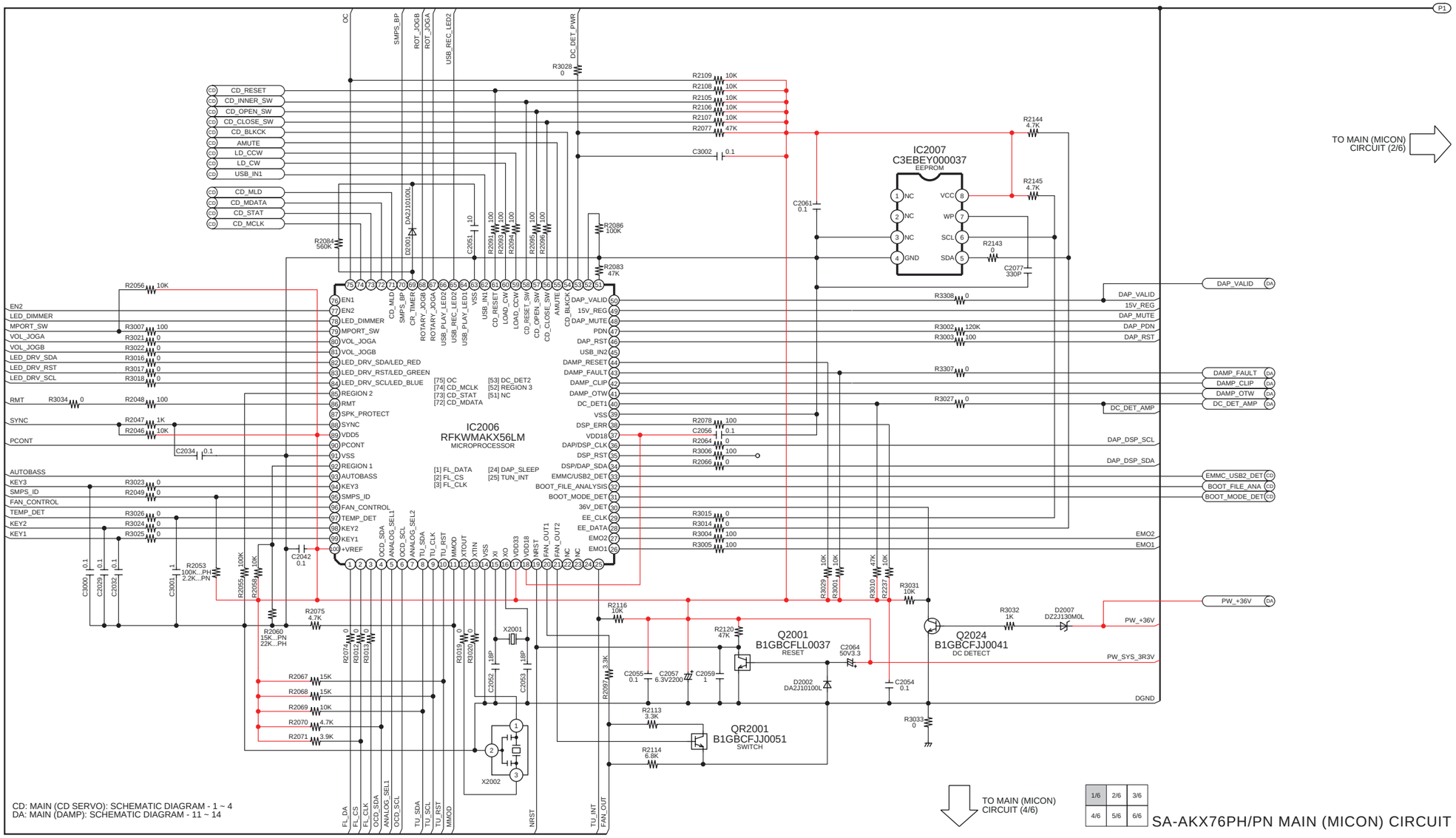


| 1/6 | 2/6 | 3/6 |
|---|---|---|
| 4/6 | 5/6 | 6/6 |

SA-AKX76PH/PN MAIN (MICON) CIRCUIT

SCHEMATIC DIAGRAM - 6

# A MAIN (MICON) CIRCUIT

: +B SIGNAL LINE
: -B SIGNAL LINE
: CD AUDIO INPUT SIGNAL LINE
: TUNER/MUSIC PORT/AUX AUDIO INPUT SIGNAL LINE
: AUDIO OUTPUT SIGNAL LINE
: AM SIGNAL LINE
: FM SIGNAL LINE
: USB SIGNAL LINE

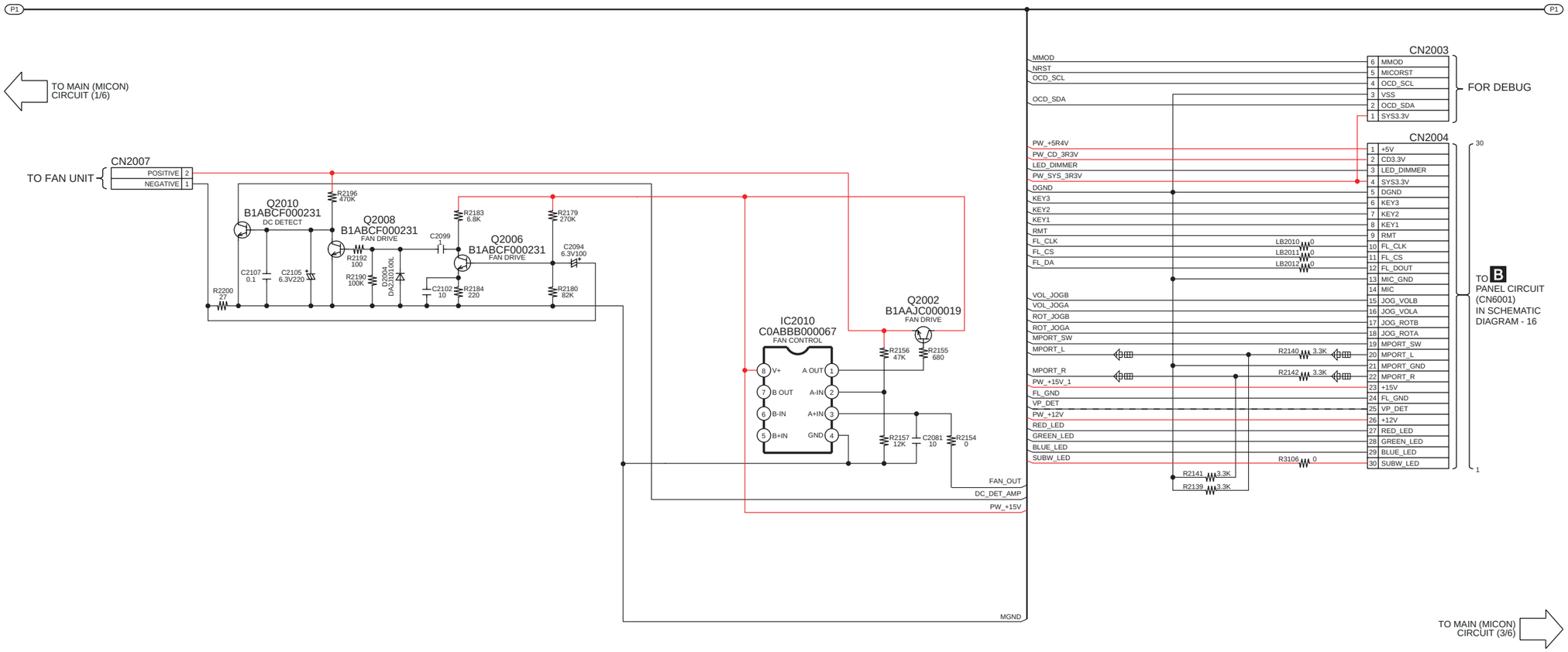


| 1/6 | 2/6 | 3/6 |
|---|---|---|
| 4/6 | 5/6 | 6/6 |

SA-AKX76PH/PN MAIN (MICON) CIRCUIT

SCHEMATIC DIAGRAM - 7

# A MAIN (MICON) CIRCUIT

: +B SIGNAL LINE
: -B SIGNAL LINE
: CD AUDIO INPUT SIGNAL LINE
: TUNER/MUSIC PORT/AUX AUDIO INPUT SIGNAL LINE
: AUDIO OUTPUT SIGNAL LINE
: AM SIGNAL LINE
: FM SIGNAL LINE
: USB SIGNAL LINE

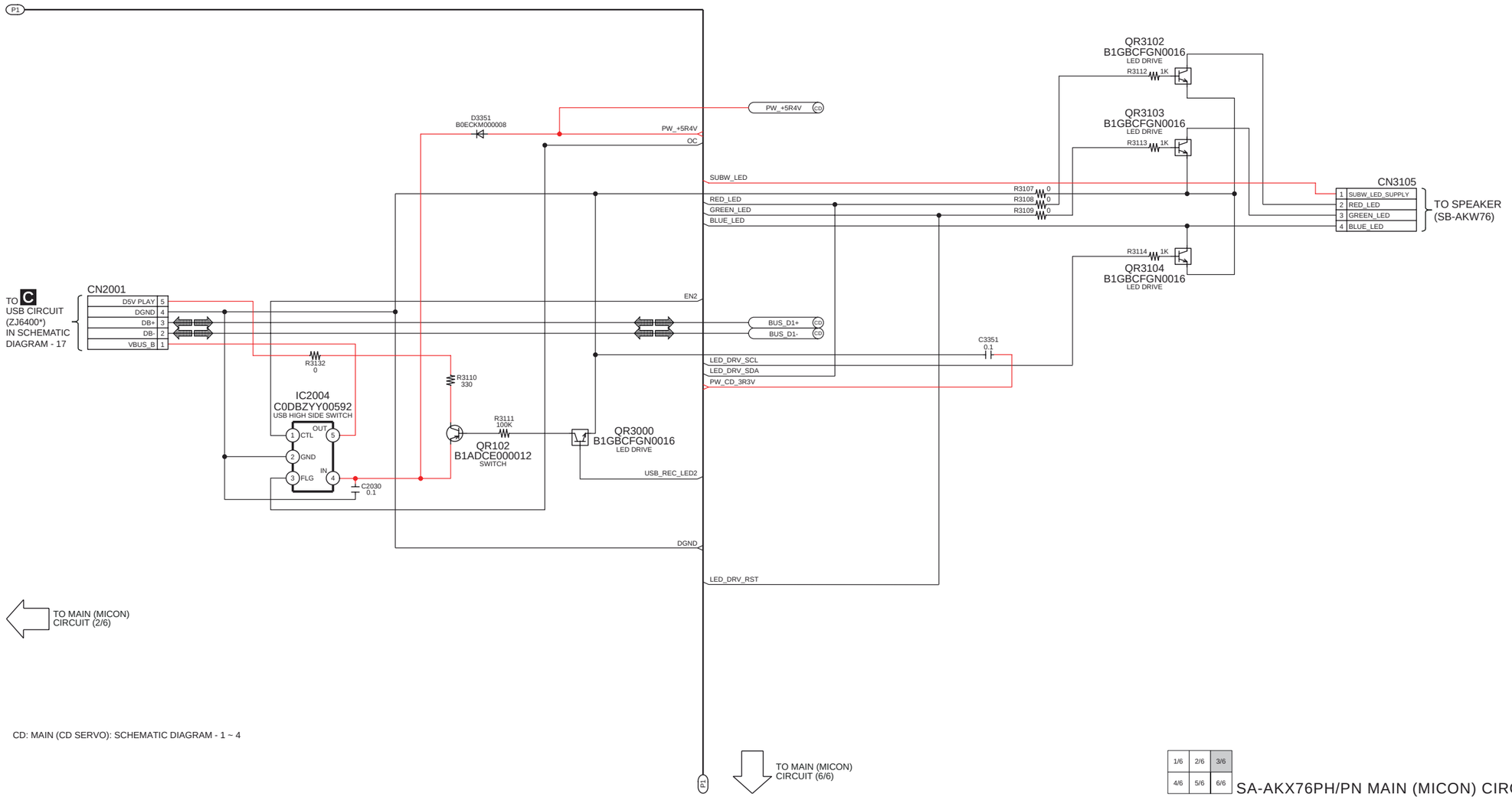


CD: MAIN (CD SERVO): SCHEMATIC DIAGRAM - 1 ~ 4

| | | |
|---|---|---|
| 1/6 | 2/6 | 3/6 |
| 4/6 | 5/6 | 6/6 |

SA-AKX76PH/PN MAIN (MICON) CIRCUIT

SCHEMATIC DIAGRAM - 8

# A MAIN (MICON) CIRCUIT

: +B SIGNAL LINE
: -B SIGNAL LINE
: CD AUDIO INPUT SIGNAL LINE
: TUNER/MUSIC PORT/AUX AUDIO INPUT SIGNAL LINE
: AUDIO OUTPUT SIGNAL LINE
: AM SIGNAL LINE
: FM SIGNAL LINE
: USB SIGNAL LINE

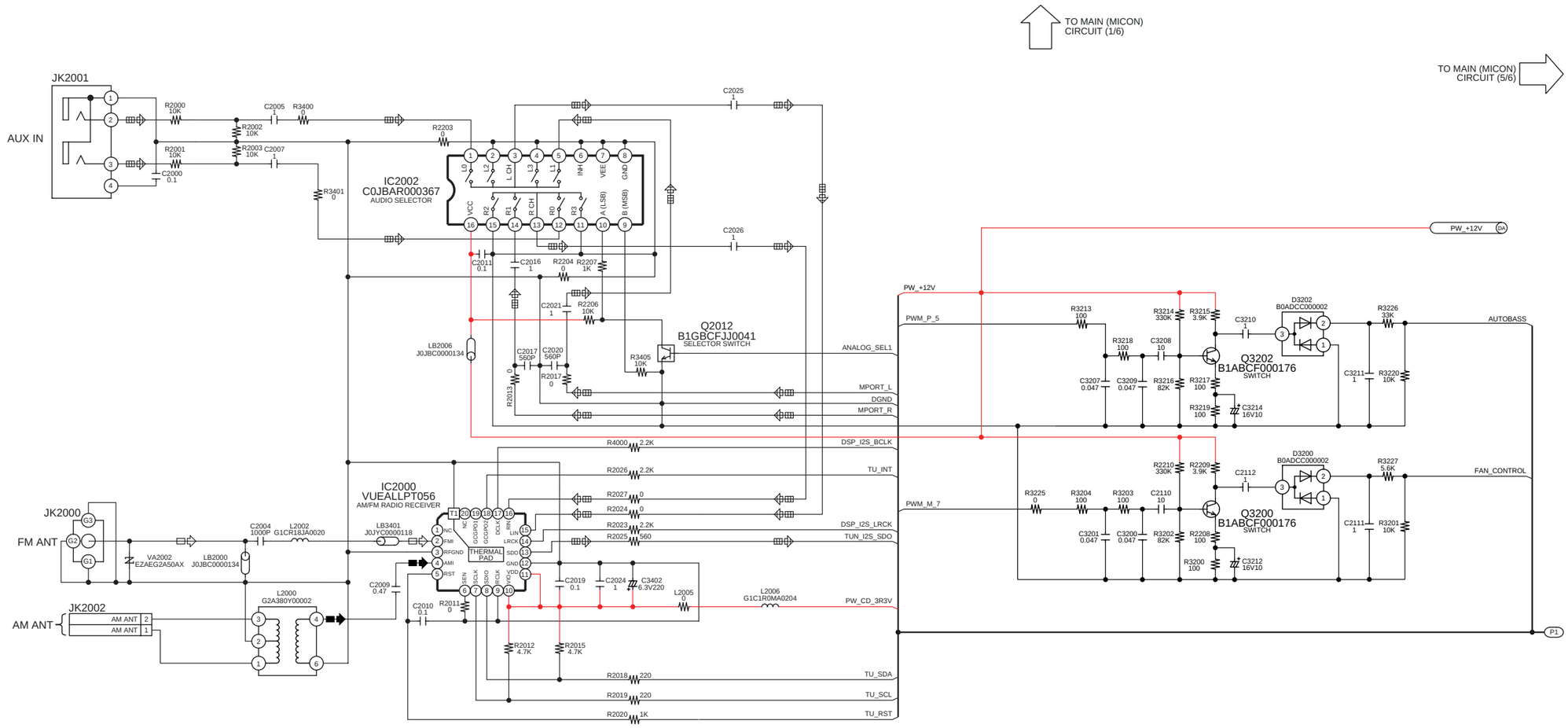


DA: MAIN (DAMP): SCHEMATIC DIAGRAM - 11 ~ 14

| | | |
|---|---|---|
| 1/6 | 2/6 | 3/6 |
| 4/6 | 5/6 | 6/6 |

SA-AKX76PH/PN MAIN (MICON) CIRCUIT

SCHEMATIC DIAGRAM - 9

# A MAIN (MICON) CIRCUIT

: +B SIGNAL LINE
: -B SIGNAL LINE
: CD AUDIO INPUT SIGNAL LINE
: TUNER/MUSIC PORT/AUX AUDIO INPUT SIGNAL LINE
: AUDIO OUTPUT SIGNAL LINE
: AM SIGNAL LINE
: FM SIGNAL LINE
: USB SIGNAL LINE

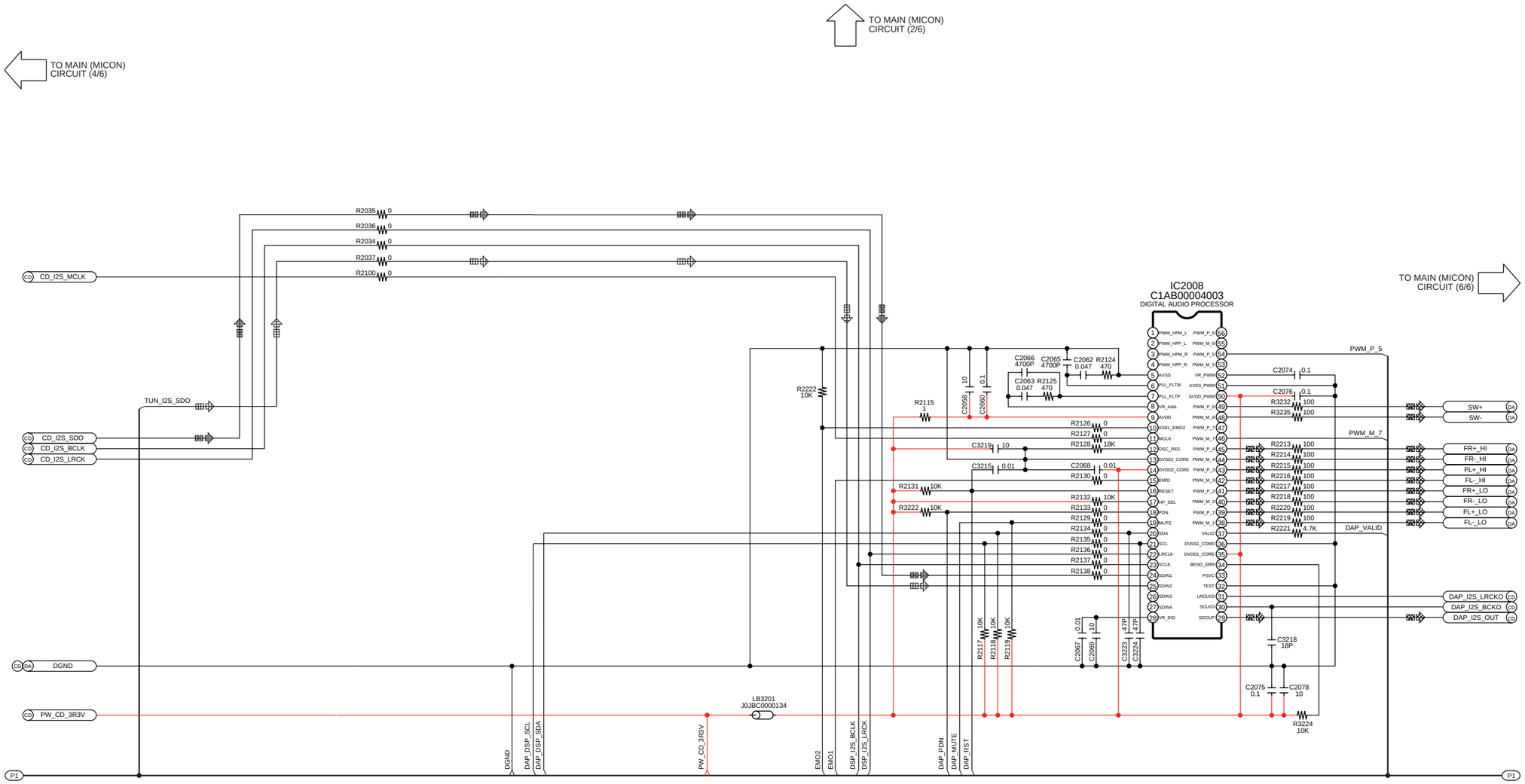


CD: MAIN (CD SERVO): SCHEMATIC DIAGRAM - 1 ~ 4
DA: MAIN (DAMP): SCHEMATIC DIAGRAM - 11 ~ 14

| | | |
|---|---|---|
| 1/6 | 2/6 | 3/6 |
| 4/6 | 5/6 | 6/6 |

SA-AKX76PH/PN MAIN (MICON) CIRCUIT

15 16 17 18 19 20 21 22 23 24 25 26 27 28

SCHEMATIC DIAGRAM - 10

# A MAIN (MICON) CIRCUIT

: +B SIGNAL LINE
: -B SIGNAL LINE
: CD AUDIO INPUT SIGNAL LINE
: TUNER/MUSIC PORT/AUX AUDIO INPUT SIGNAL LINE
: AUDIO OUTPUT SIGNAL LINE
: AM SIGNAL LINE
: FM SIGNAL LINE
: USB SIGNAL LINE

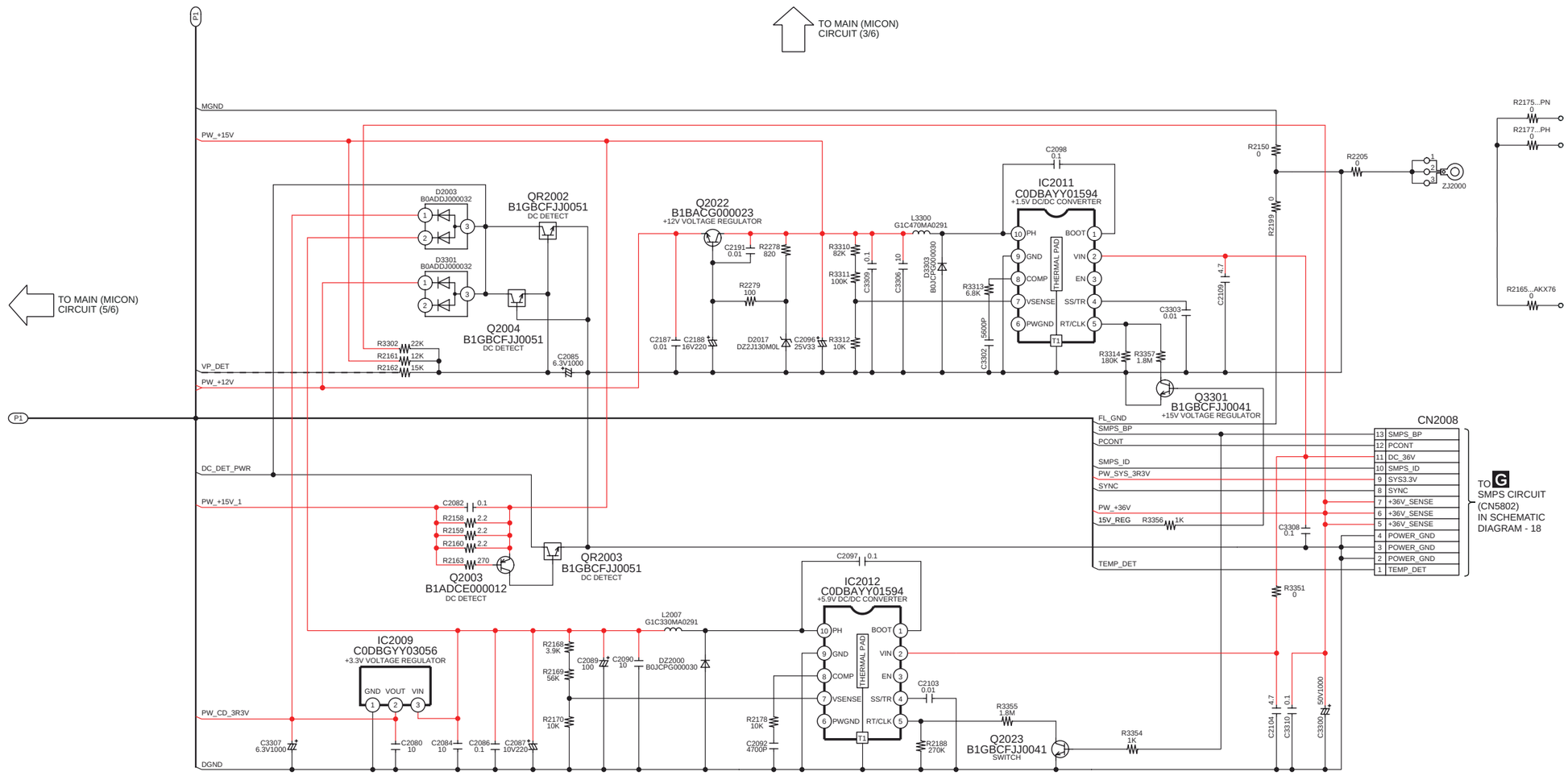


| 1/6 | 2/6 | 3/6 |
|---|---|---|
| 4/6 | 5/6 | 6/6 |

SA-AKX76PH/PN MAIN (MICON) CIRCUIT

SCHEMATIC DIAGRAM - 11

# A MAIN (DAMP) CIRCUIT

—— : +B SIGNAL LINE  ⊠ : AUDIO OUTPUT SIGNAL LINE

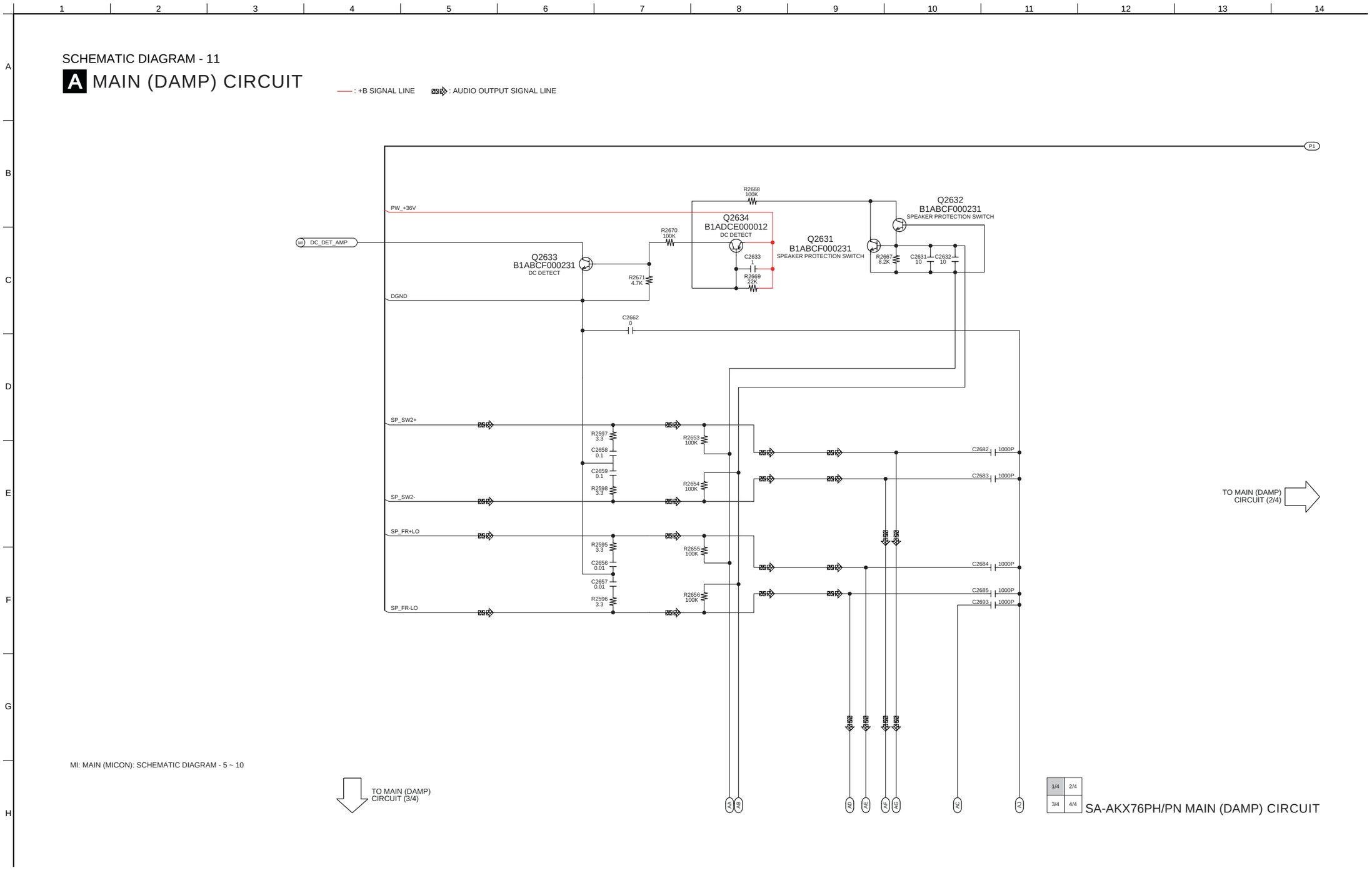


MI: MAIN (MICON): SCHEMATIC DIAGRAM - 5 ~ 10

| 1/4 | 2/4 |
|---|---|
| 3/4 | 4/4 |

SA-AKX76PH/PN MAIN (DAMP) CIRCUIT

SCHEMATIC DIAGRAM - 12

# A MAIN (DAMP) CIRCUIT

—— : +B SIGNAL LINE  : AUDIO OUTPUT SIGNAL LINE

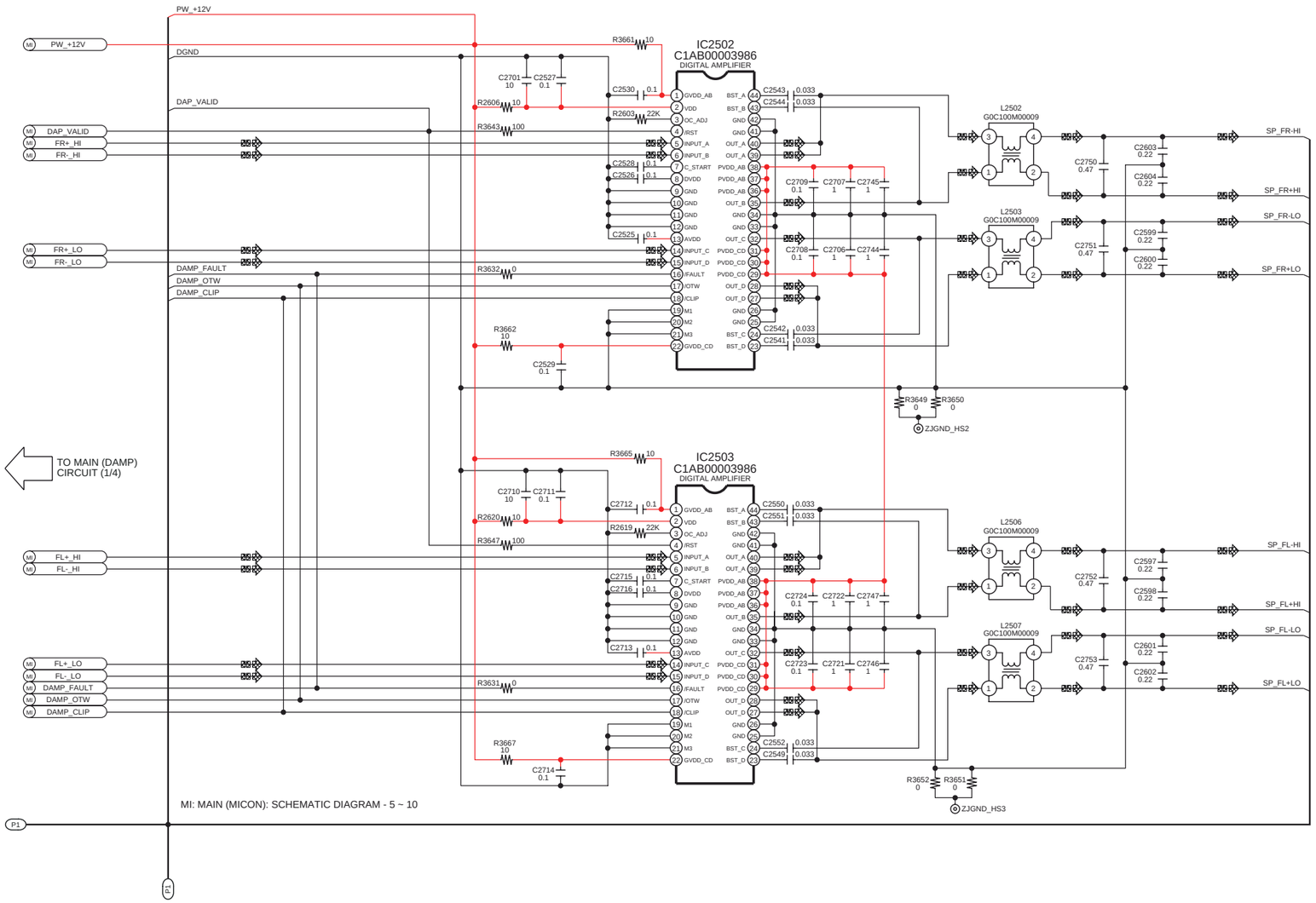


| 1/4 | 2/4 |
|---|---|
| 3/4 | 4/4 |

SA-AKX76PH/PN MAIN (DAMP) CIRCUIT

SCHEMATIC DIAGRAM - 13

# A MAIN (DAMP) CIRCUIT

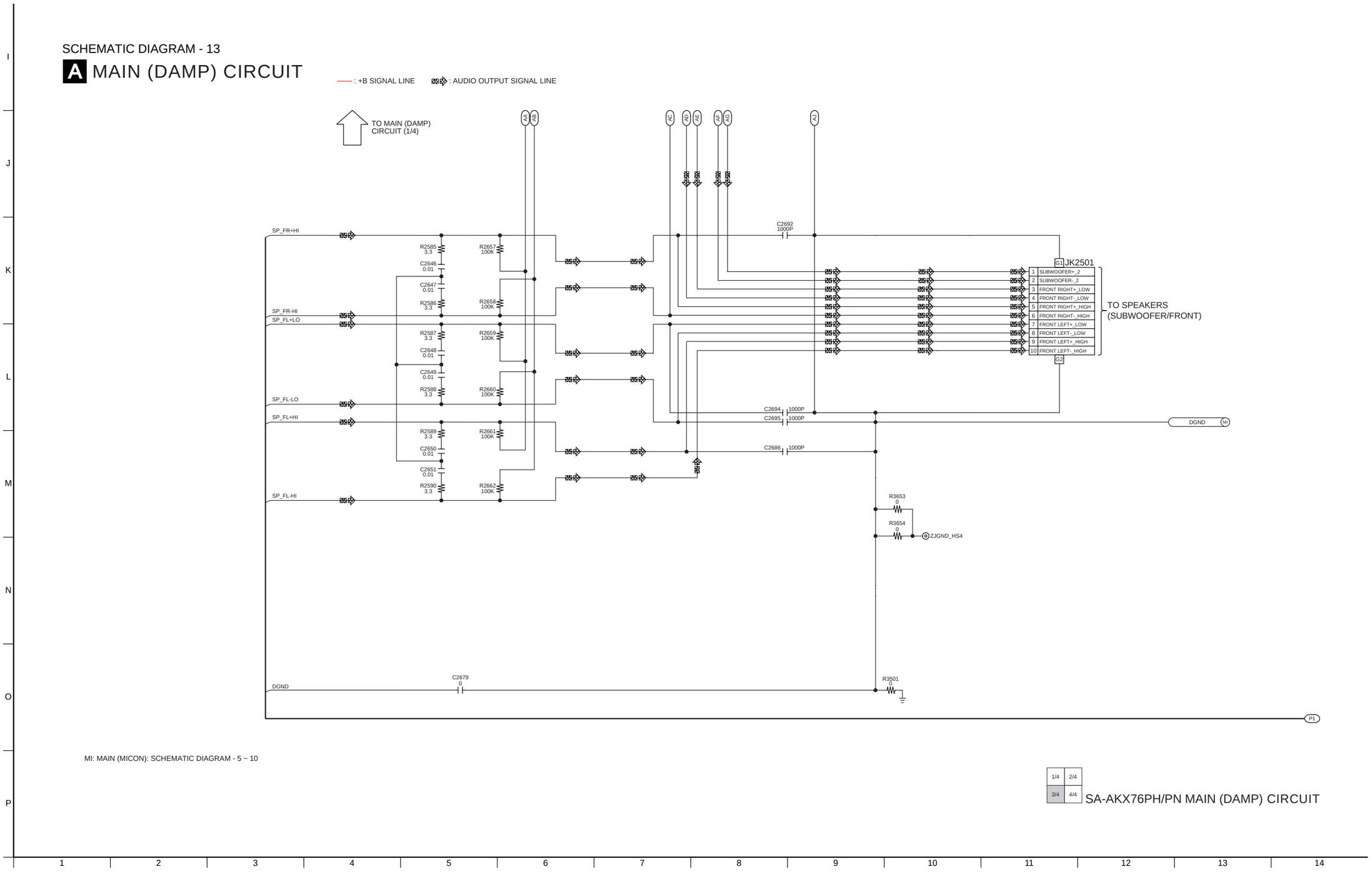


MI: MAIN (MICON): SCHEMATIC DIAGRAM - 5 ~ 10

| | |
|---|---|
| 1/4 | 2/4 |
| 3/4 | 4/4 |

SA-AKX76PH/PN MAIN (DAMP) CIRCUIT

SCHEMATIC DIAGRAM - 14

# A MAIN (DAMP) CIRCUIT

—— : +B SIGNAL LINE  ▷▷▷ : AUDIO OUTPUT SIGNAL LINE

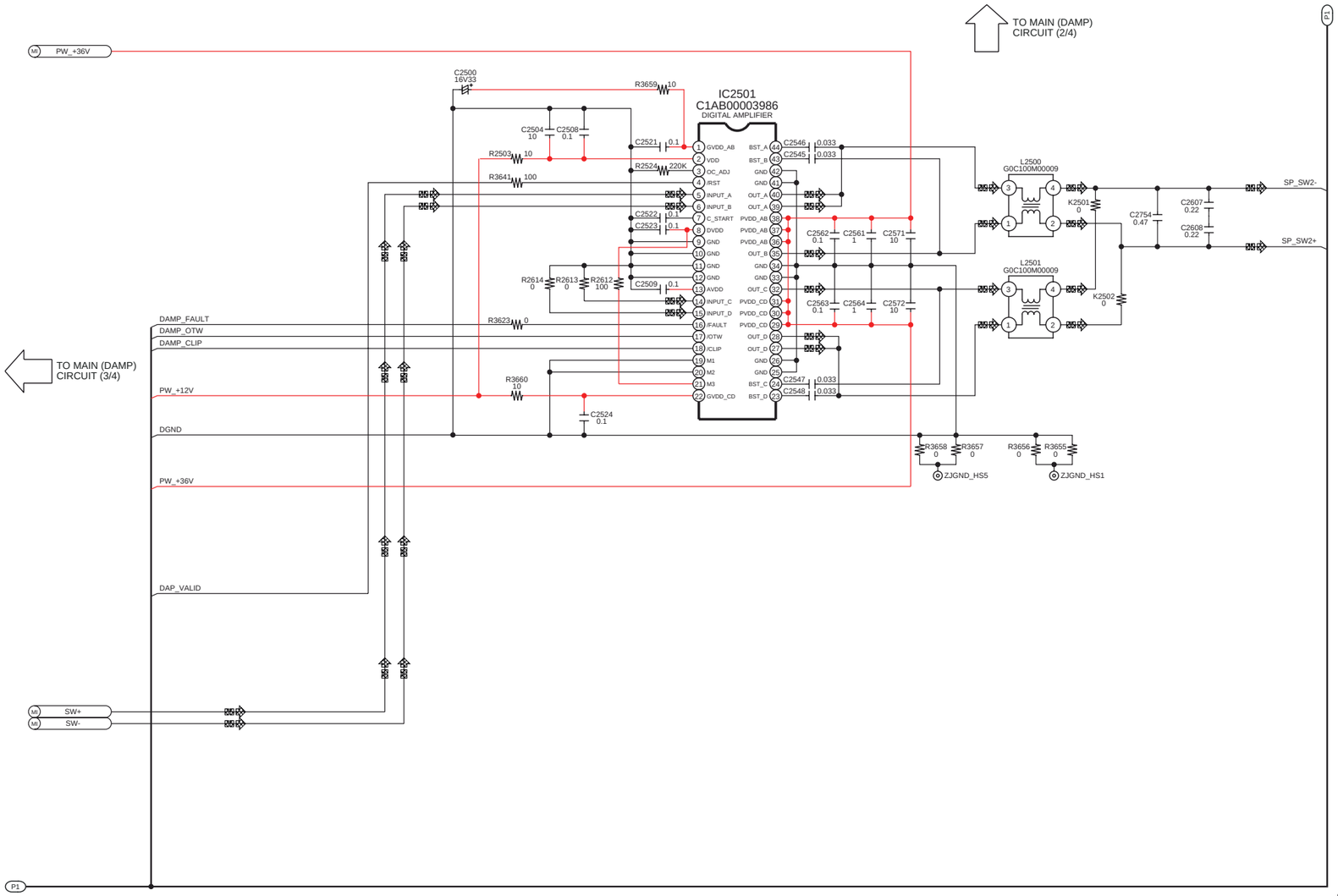


MI: MAIN (MICON): SCHEMATIC DIAGRAM - 5 ~ 10

| 1/4 | 2/4 |
|---|---|
| 3/4 | 4/4 |

SA-AKX76PH/PN MAIN (DAMP) CIRCUIT

## 14.3. Panel Circuit

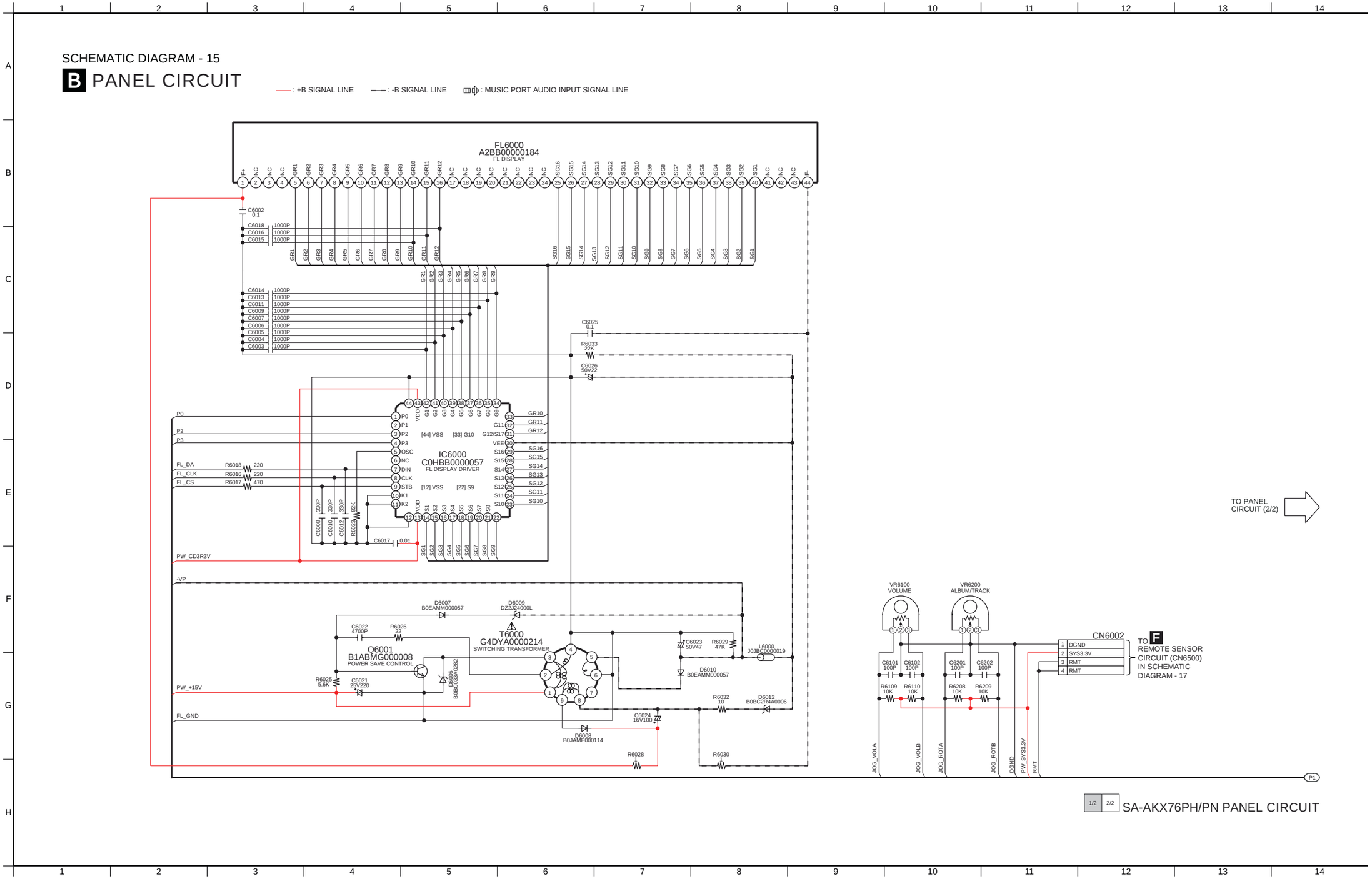

SCHEMATIC DIAGRAM - 16

# B PANEL CIRCUIT

: +B SIGNAL LINE  : -B SIGNAL LINE  : MUSIC PORT AUDIO INPUT SIGNAL LINE

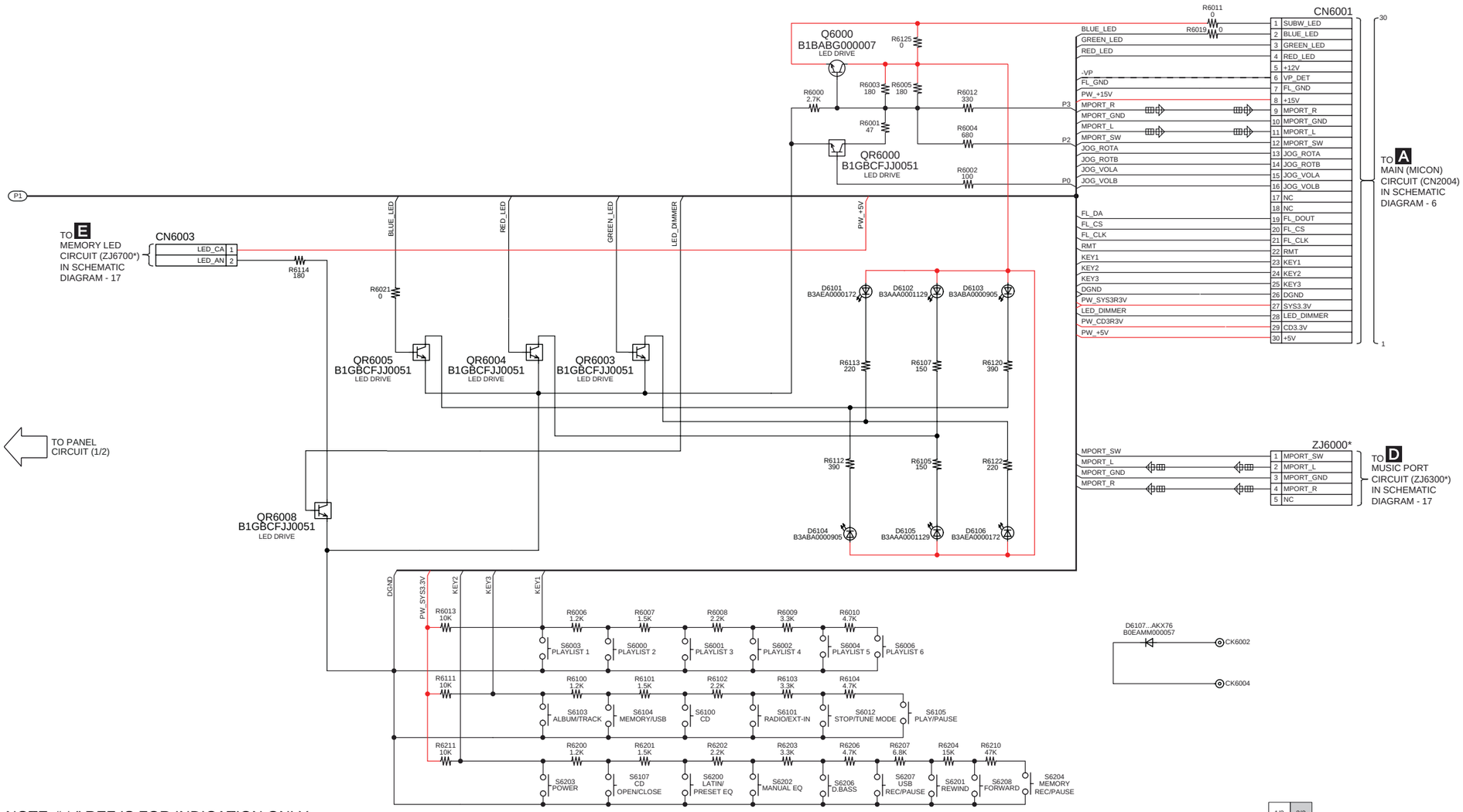


NOTE: " * " REF IS FOR INDICATION ONLY

1/2 2/2 SA-AKX76PH/PN PANEL CIRCUIT

## 14.4. USB, Music Port, Memory LED & Remote Sensor Circuit

SCHEMATIC DIAGRAM - 17

### C USB CIRCUIT

: +B SIGNAL LINE  : USB SIGNAL LINE

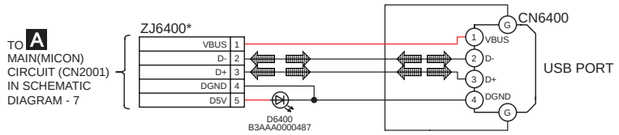


### D MUSIC PORT CIRCUIT

: MUSIC PORT AUDIO INPUT SIGNAL LINE

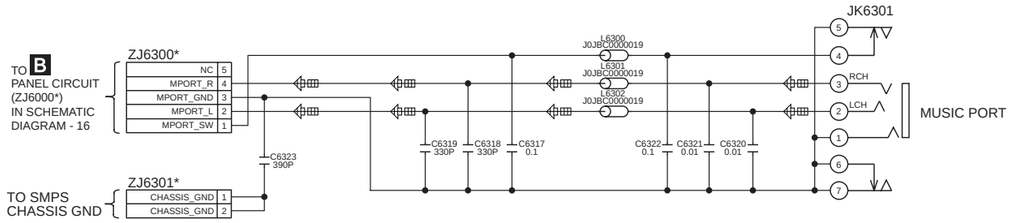


### E MEMORY LED CIRCUIT

: +B SIGNAL LINE

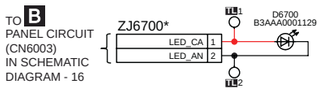


### F REMOTE SENSOR CIRCUIT

: +B SIGNAL LINE

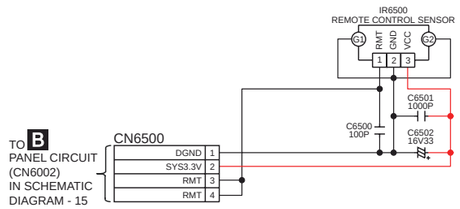


NOTE: " * " REF IS FOR INDICATION ONLY

SA-AKX76PH/PN USB / MUSIC PORT / MEMORY LED / REMOTE SENSOR CIRCUIT

## 14.5. SMPS Circuit

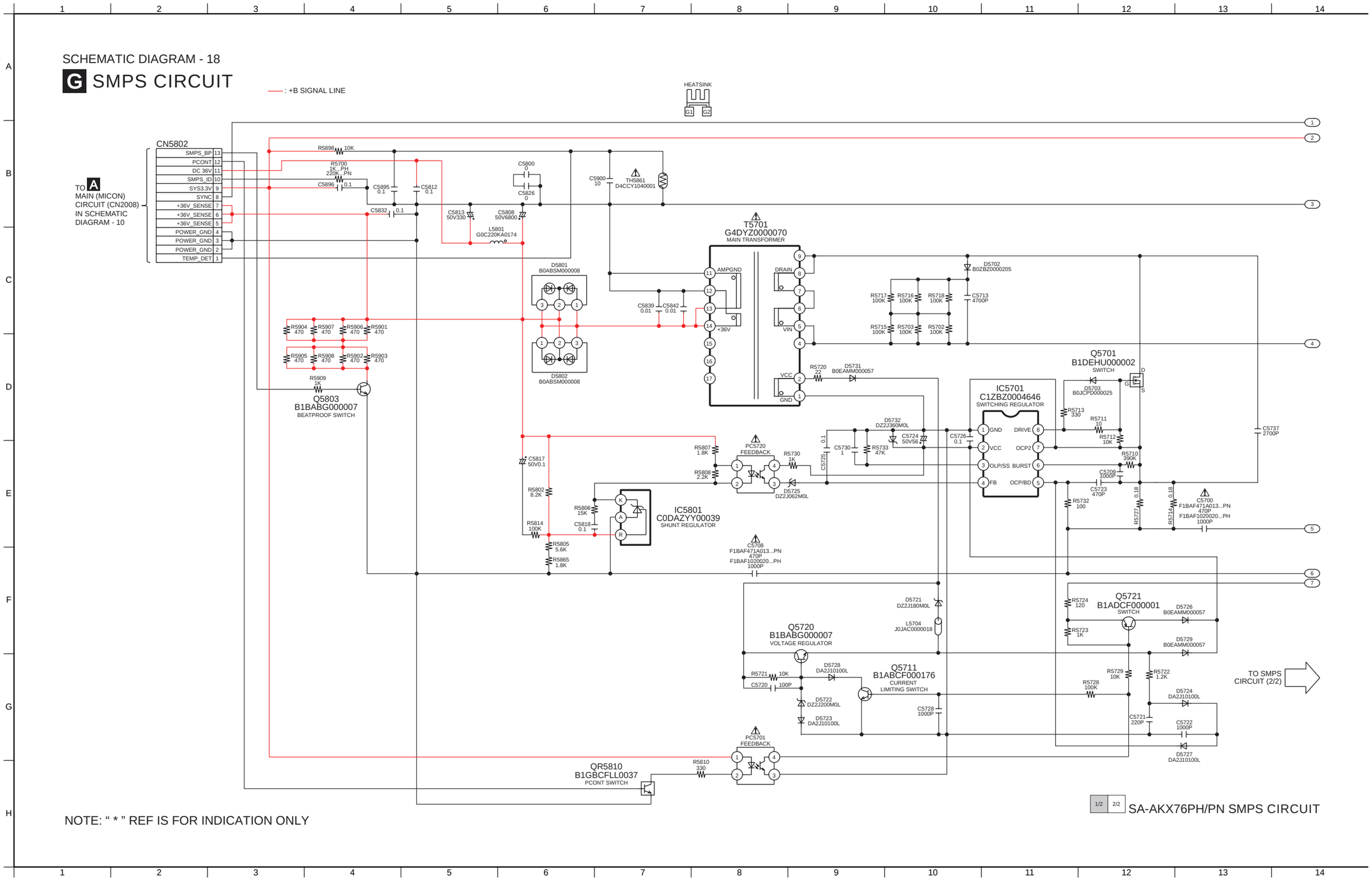

SCHEMATIC DIAGRAM - 19

# G SMPS CIRCUIT

—— : +B SIGNAL LINE

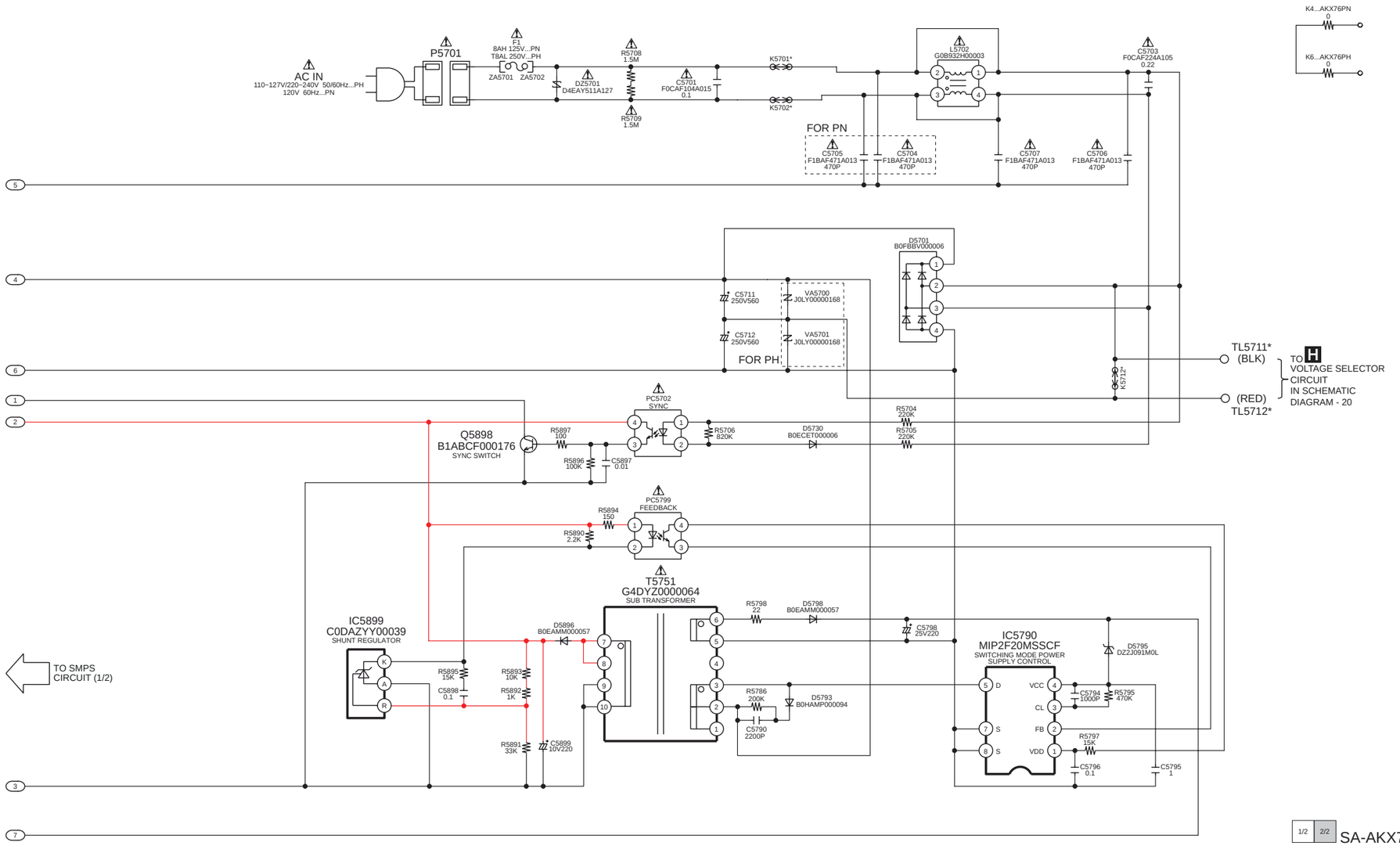


NOTE: " * " REF IS FOR INDICATION ONLY

1/2 2/2 SA-AKX76PH/PN SMPS CIRCUIT

## 14.6. Voltage Selector & CD Interface Circuit

SCHEMATIC DIAGRAM - 20

### H VOLTAGE SELECTOR CIRCUIT

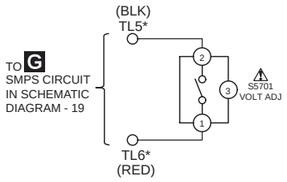


### I CD INTERFACE CIRCUIT

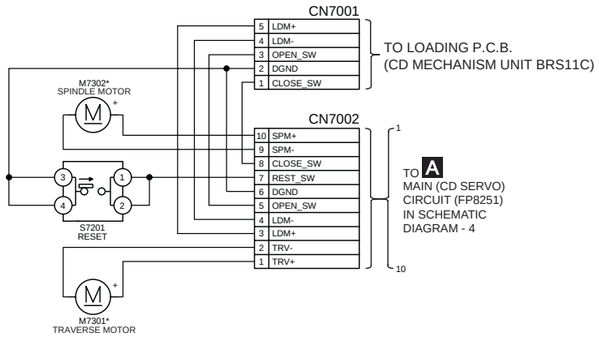


NOTE: " * " REF IS FOR INDICATION ONLY

SA-AKX76PH/PN VOLTAGE SELECTOR / CD INTERFACE CIRCUIT

# 15 Printed Circuit Board

## 15.1. Main P.C.B.

**A** MAIN P.C.B. (REP4882D...PH)
(REP4882C...PN)

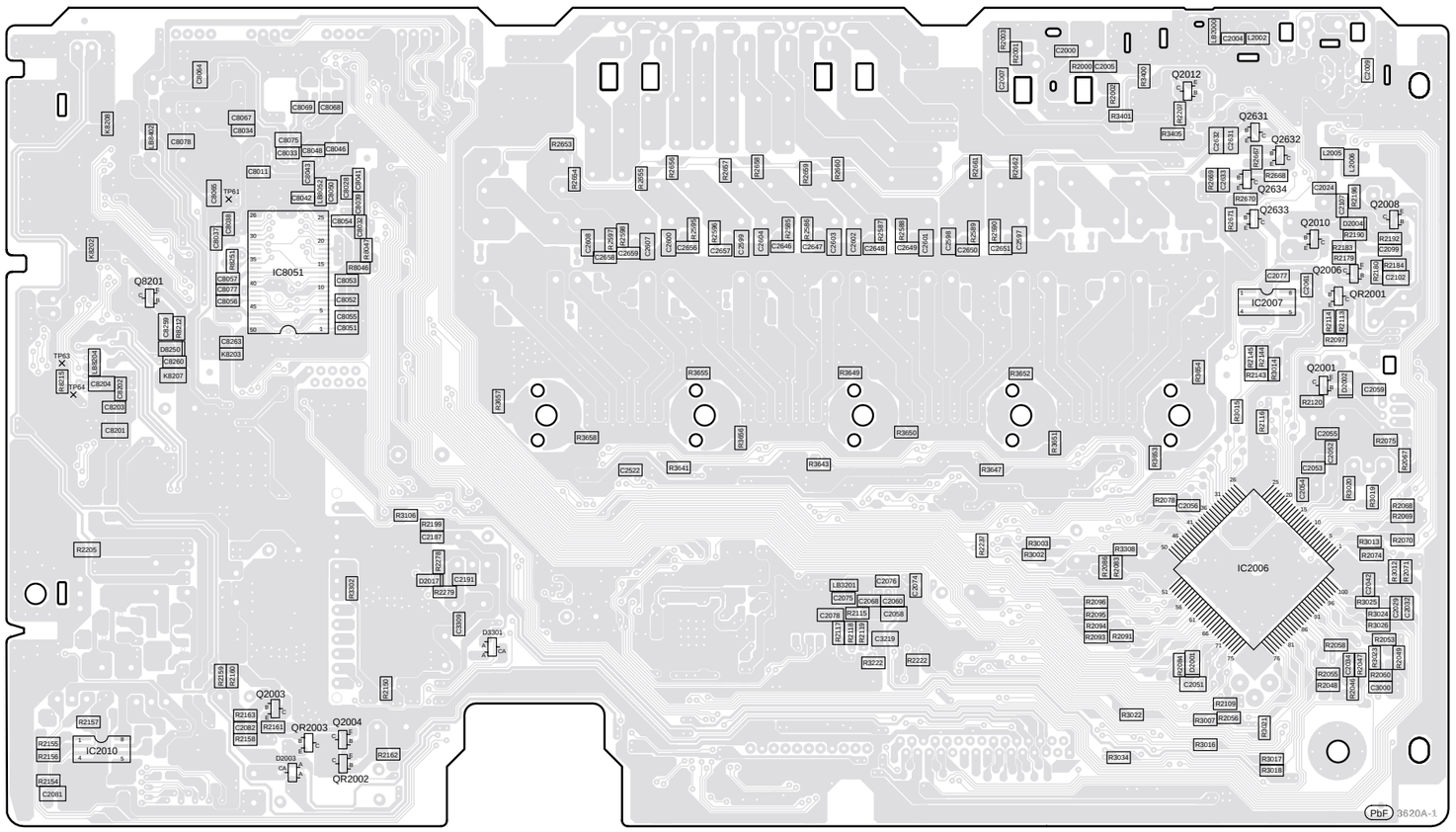


(SIDE A)

SA-AKX76PH/PN
MAIN P.C.B.

## A MAIN P.C.B. (REP4882D...PH)
(REP4882C...PN)

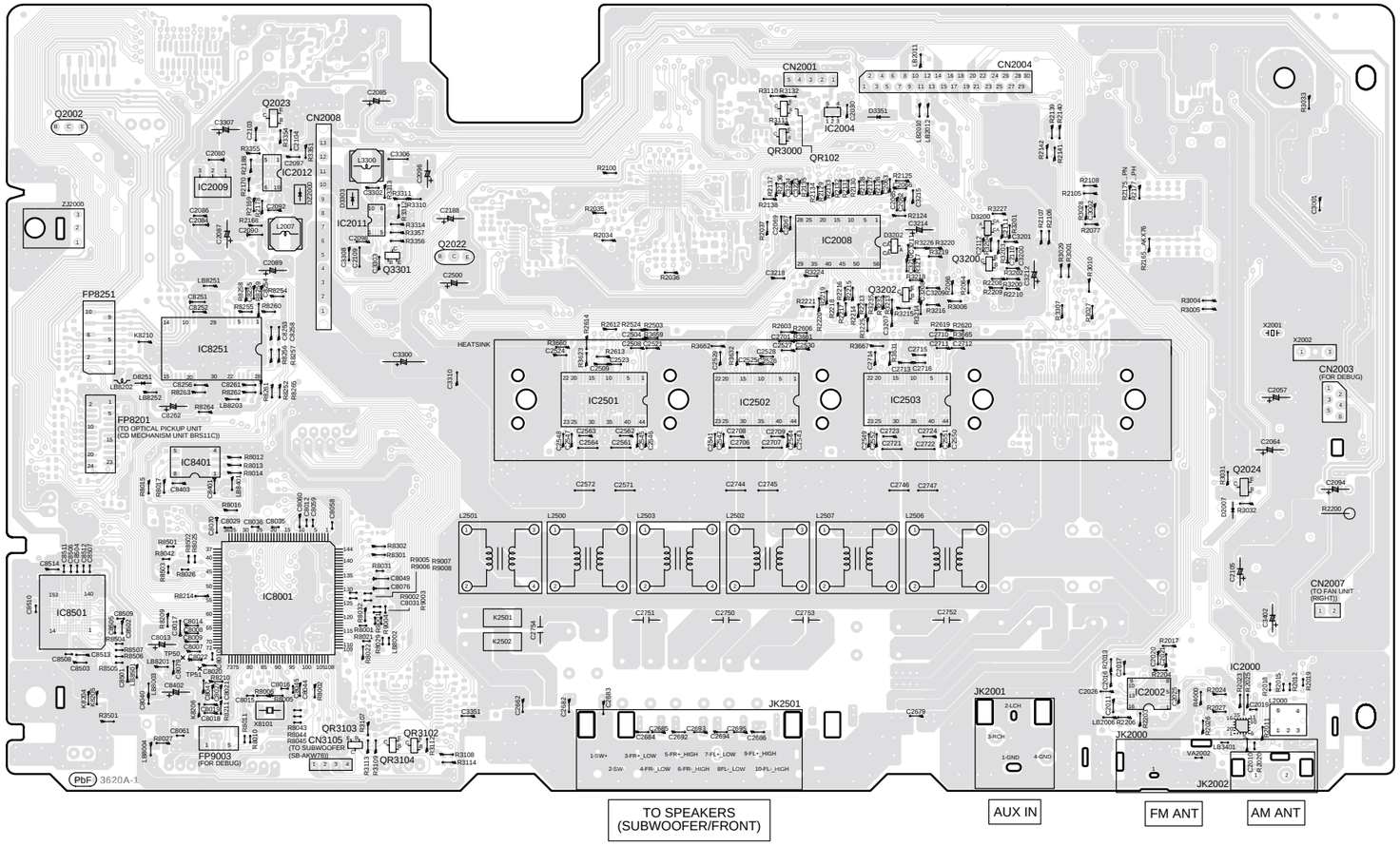


(SIDE B)

SA-AKX76PH/PN
MAIN P.C.B.

## 15.2. Panel, USB, Music Port & Memory LED P.C.B.

**B** PANEL P.C.B. (REP4884AA)

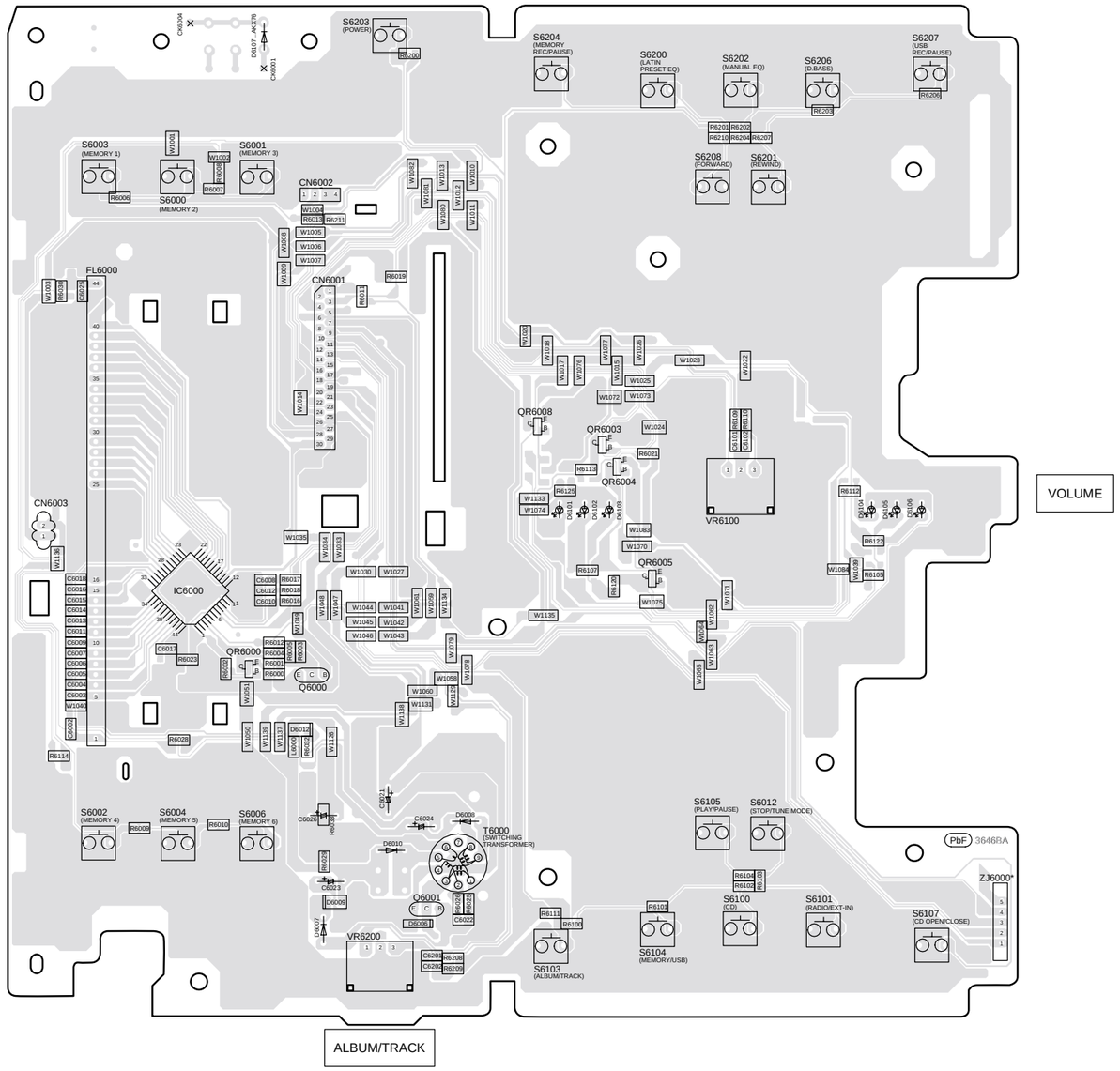


**C** USB P.C.B. (REP4884AB)

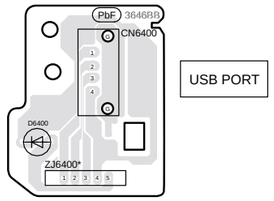


**D** MUSIC PORT P.C.B. (REP4884AA)

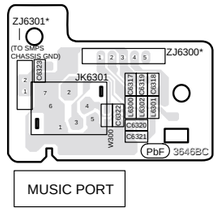


**E** MEMORY LED P.C.B. (REP4884AA)

NOTE: " * " REF IS FOR INDICATION ONLY

SA-AKX76PH/PN
PANEL / USB / MUSIC PORT / MEMORY LED P.C.B.

## 15.3. SMPS & Voltage Selector P.C.B.

**G** SMPS P.C.B. (REP4965F...PH)
(REP4965D...PN)

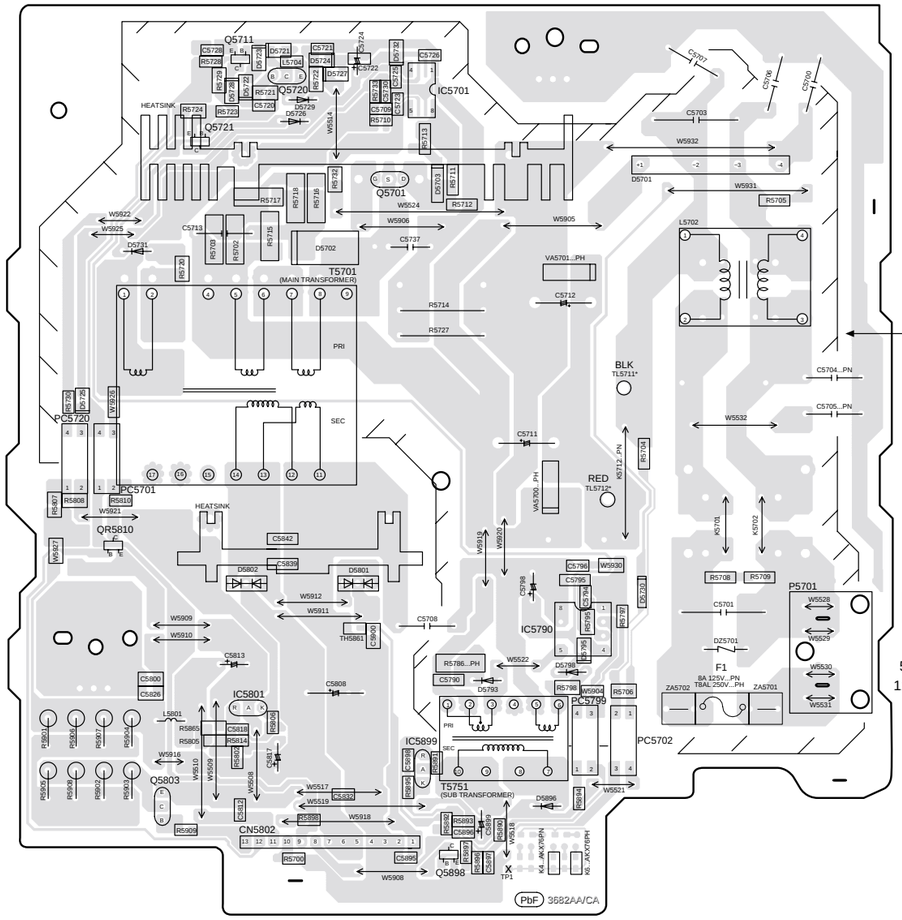


CAUTION
RISK OF ELECTRIC SHOCK
AC VOLTAGE LINE.
PLEASE DO NOT TOUCH THIS P.C.B

AC IN~
110-127V/
220-240V
50/60Hz...PH
120V 60Hz...PN

**H** VOLTAGE SELECTOR P.C.B. (REP4965F...PH)

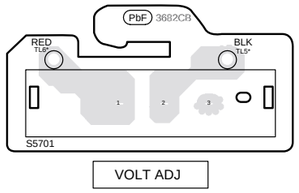


NOTE: " * " REF IS FOR INDICATION ONLY

SA-AKX76PH/PN
SMPS / VOLTAGE SELECTOR P.C.B.

## 15.4. Remote Sensor & CD Interface P.C.B.

**F** REMOTE SENSOR P.C.B. (REP4884AE)

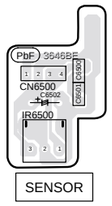


**I** CD INTERFACE P.C.B. (REP4945A)

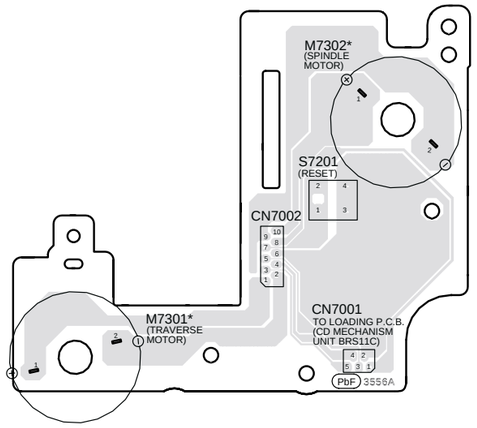


NOTE: " * " REF IS FOR INDICATION ONLY

SA-AKX76PH/PN
REMOTE SENSOR / CD INTERFACE P.C.B.

# 16 Appendix Information of Schematic Diagram

## 16.1. Voltage & Waveform Chart

**Note:**

- Indication Voltage Values are in standard values for the unit measured by the DC electronic circuit tester (high-impedance) with the chassis taken as standard.
  Therefore, there may exist some errors in voltage values, depending on the internal impedance of the DC circuit tester.
- Circuit voltage and waveform described herein shall be regarded as reference information when probing defect point because it may differ from actual measuring value due to difference of Measuring instrument and its measuring condition and product itself.

### 16.1.1. Main P.C.B. (1/6)

| REF NO. | IC2000 | | | | | | | | | | | | | | | | | | | |
|---|---|---|---|---|---|---|---|---|---|---|---|---|---|---|---|---|---|---|---|---|
| MODE | 1 | 2 | 3 | 4 | 5 | 6 | 7 | 8 | 9 | 10 | 11 | 12 | 13 | 14 | 15 | 16 | 17 | 18 | 19 | 20 |
| TUNER | 0 | 1.5 | 0 | 3.0 | 3.3 | 0 | 3.0 | 3.3 | 0 | 3.3 | 3.3 | 0 | 1.4 | 0.3 | 2.8 | 2.8 | 3.3 | 0 | 0 | 0 |

| REF NO. | IC2002 | | | | | | | | | | | | | | | | | | | |
|---|---|---|---|---|---|---|---|---|---|---|---|---|---|---|---|---|---|---|---|---|
| MODE | 1 | 2 | 3 | 4 | 5 | 6 | 7 | 8 | 9 | 10 | 11 | 12 | 13 | 14 | 15 | 16 | | | | |
| AUX IN | 2.8 | 0 | 3.0 | 0 | 2.0 | 0 | 0 | 0 | 0 | 3.0 | 0 | 2.8 | 3.0 | 2.0 | 0 | 12.0 | | | | |
| STANDBY | 2.8 | 0 | 3.0 | 0 | 2.0 | 0 | 0 | 0 | 0 | 3.0 | 0 | 2.8 | 3.0 | 2.0 | 0 | 12.0 | | | | |

| REF NO. | IC2004 | | | | | | | | | | | | | | | | | | | |
|---|---|---|---|---|---|---|---|---|---|---|---|---|---|---|---|---|---|---|---|---|
| MODE | 1 | 2 | 3 | 4 | 5 | | | | | | | | | | | | | | | |
| POWER ON | 3.3 | 0 | 3.3 | 5.1 | 5.1 | | | | | | | | | | | | | | | |
| STANDBY | 3.3 | 0 | 3.3 | 5.1 | 5.1 | | | | | | | | | | | | | | | |

| REF NO. | IC2006 | | | | | | | | | | | | | | | | | | | |
|---|---|---|---|---|---|---|---|---|---|---|---|---|---|---|---|---|---|---|---|---|
| MODE | 1 | 2 | 3 | 4 | 5 | 6 | 7 | 8 | 9 | 10 | 11 | 12 | 13 | 14 | 15 | 16 | 17 | 18 | 19 | 20 |
| POWER ON | 1.3 | 0.7 | 1.0 | 0 | 0.8 | 0 | 0 | 3.3 | 3.3 | 0 | 0 | 1.6 | 1.5 | 0 | 1.3 | 1.7 | 3.3 | 1.8 | 3.3 | 3.3 |
| STANDBY | 1.3 | 0.7 | 1.0 | 0 | 0.8 | 0 | 0 | 3.3 | 3.3 | 0 | 0 | 1.6 | 1.5 | 0 | 1.3 | 1.7 | 3.3 | 1.8 | 3.3 | 3.3 |

| REF NO. | IC2006 | | | | | | | | | | | | | | | | | | | |
|---|---|---|---|---|---|---|---|---|---|---|---|---|---|---|---|---|---|---|---|---|
| MODE | 21 | 22 | 23 | 24 | 25 | 26 | 27 | 28 | 29 | 30 | 31 | 32 | 33 | 34 | 35 | 36 | 37 | 38 | 39 | 40 |
| POWER ON | 3.3 | 0 | 0 | 0 | 3.3 | 3.3 | 0 | 3.3 | 3.3 | 1.8 | 0 | 0 | 5.0 | 3.3 | 3.3 | 3.3 | 1.8 | 3.3 | 0 | 3.3 |
| STANDBY | 3.3 | 0 | 0 | 0 | 3.3 | 3.3 | 0 | 3.3 | 3.3 | 1.8 | 0 | 0 | 5.0 | 3.3 | 3.3 | 3.3 | 1.8 | 3.3 | 0 | 3.3 |

| REF NO. | IC2006 | | | | | | | | | | | | | | | | | | | |
|---|---|---|---|---|---|---|---|---|---|---|---|---|---|---|---|---|---|---|---|---|
| MODE | 41 | 42 | 43 | 44 | 45 | 46 | 47 | 48 | 49 | 50 | 51 | 52 | 53 | 54 | 55 | 56 | 57 | 58 | 59 | 60 |
| CD PLAY | 3.3 | 3.3 | 3.3 | 0 | 0 | 3.3 | 3.3 | 3.3 | 0 | 3.3 | 0 | 0 | 3.3 | 3.2 | 0 | 0 | 3.3 | 3.3 | 2.8 | 2.8 |
| STANDBY | 3.3 | 3.3 | 3.3 | 0 | 0 | 3.3 | 3.3 | 3.3 | 0 | 3.3 | 0 | 0 | 3.3 | 3.2 | 0 | 0 | 3.3 | 3.3 | 2.8 | 2.8 |

| REF NO. | IC2006 | | | | | | | | | | | | | | | | | | | |
|---|---|---|---|---|---|---|---|---|---|---|---|---|---|---|---|---|---|---|---|---|
| MODE | 61 | 62 | 63 | 64 | 65 | 66 | 67 | 68 | 69 | 70 | 71 | 72 | 73 | 74 | 75 | 76 | 77 | 78 | 79 | 80 |
| CD PLAY | 3.3 | 3.3 | 0 | 0 | 0 | 0 | 3.3 | 3.3 | 3.3 | 0 | 3.3 | 3.3 | 3.3 | 3.3 | 3.3 | 3.3 | 3.3 | 3.3 | 0 | 3.3 |
| STANDBY | 3.3 | 3.3 | 0 | 0 | 0 | 0 | 3.3 | 3.3 | 3.3 | 0 | 3.3 | 3.3 | 3.3 | 3.3 | 3.3 | 3.3 | 3.3 | 3.3 | 0 | 3.3 |

| REF NO. | IC2006 | | | | | | | | | | | | | | | | | | | |
|---|---|---|---|---|---|---|---|---|---|---|---|---|---|---|---|---|---|---|---|---|
| MODE | 81 | 82 | 83 | 84 | 85 | 86 | 87 | 88 | 89 | 90 | 91 | 92 | 93 | 94 | 95 | 96 | 97 | 98 | 99 | 100 |
| CD PLAY | 3.3 | 3.3 | 3.3 | 3.3 | 0 | 3.3 | 0 | 1.6 | 3.3 | 3.3 | 0 | 0.4 | 0.6 | 3.3 | 1.7 | 3.3 | 2.6 | 3.3 | 3.0 | 3.3 |
| STANDBY | 3.3 | 3.3 | 3.3 | 3.3 | 0 | 3.3 | 0 | 1.6 | 3.3 | 3.3 | 0 | 0.4 | 0.6 | 3.3 | 1.7 | 3.3 | 2.6 | 3.3 | 3.0 | 3.3 |

| REF NO. | IC2007 | | | | | | | | | | | | | | | | | | | |
|---|---|---|---|---|---|---|---|---|---|---|---|---|---|---|---|---|---|---|---|---|
| MODE | 1 | 2 | 3 | 4 | 5 | 6 | 7 | 8 | | | | | | | | | | | | |
| POWER ON | 0 | 0 | 0 | 0 | 3.3 | 3.3 | 0 | 3.3 | | | | | | | | | | | | |
| STANDBY | 0 | 0 | 0 | 0 | 3.3 | 3.3 | 0 | 3.3 | | | | | | | | | | | | |

| REF NO. | IC2008 | | | | | | | | | | | | | | | | | | | |
|---|---|---|---|---|---|---|---|---|---|---|---|---|---|---|---|---|---|---|---|---|
| MODE | 1 | 2 | 3 | 4 | 5 | 6 | 7 | 8 | 9 | 10 | 11 | 12 | 13 | 14 | 15 | 16 | 17 | 18 | 19 | 20 |
| CD PLAY | 0 | 0 | 0 | 0 | 0 | 0.6 | 1.1 | 1.8 | 3.3 | 0 | 1.6 | 1.0 | 0 | 3.3 | 3.3 | 3.3 | 3.3 | 3.3 | 3.3 | 3.3 |
| STANDBY | 0 | 0 | 0 | 0 | 0 | 0.7 | 1.1 | 1.8 | 3.3 | 0 | 1.6 | 1.0 | 0 | 3.3 | 3.3 | 3.3 | 3.3 | 3.3 | 3.3 | 3.3 |

**SA-AKX76PH/PN MAIN P.C.B.**

## 16.1.2. Main P.C.B. (2/6)

| REF NO. | IC2008 | | | | | | | | | | | | | | | | | | | |
|---|---|---|---|---|---|---|---|---|---|---|---|---|---|---|---|---|---|---|---|---|
| MODE | 21 | 22 | 23 | 24 | 25 | 26 | 27 | 28 | 29 | 30 | 31 | 32 | 33 | 34 | 35 | 36 | 37 | 38 | 39 | 40 |
| CD PLAY | 3.3 | 1.7 | 1.6 | 0.8 | 0 | 0 | 0 | 1.8 | 1.2 | 1.6 | 1.6 | 0 | 0 | 3.3 | 3.3 | 0 | 3.3 | 1.6 | 1.6 | 1.6 |
| STANDBY | 3.3 | 1.7 | 1.6 | 0.8 | 0 | 0 | 0 | 1.8 | 1.2 | 1.6 | 1.6 | 0 | 0 | 3.3 | 3.3 | 0 | 3.3 | 1.6 | 1.6 | 1.6 |

| REF NO. | IC2008 | | | | | | | | | | | | | | | | | | | |
|---|---|---|---|---|---|---|---|---|---|---|---|---|---|---|---|---|---|---|---|---|
| MODE | 41 | 42 | 43 | 44 | 45 | 46 | 47 | 48 | 49 | 50 | 51 | 52 | 53 | 54 | 55 | 56 | | | | |
| CD PLAY | 1.6 | 1.6 | 1.6 | 1.6 | 1.6 | 1.6 | 0 | 1.6 | 1.6 | 3.3 | 0 | 1.8 | 0 | 1.6 | 0 | 0 | | | | |
| STANDBY | 1.6 | 1.6 | 1.6 | 1.6 | 1.6 | 1.6 | 0 | 1.6 | 1.6 | 3.3 | 0 | 1.8 | 0 | 1.6 | 0 | 0 | | | | |

| REF NO. | IC2009 | | | | | | | | | | | | | | | | | | | |
|---|---|---|---|---|---|---|---|---|---|---|---|---|---|---|---|---|---|---|---|---|
| MODE | 1 | 2 | 3 | | | | | | | | | | | | | | | | | |
| POWER ON | 0 | 3.3 | 5.4 | | | | | | | | | | | | | | | | | |
| STANDBY | 0 | 3.3 | 5.4 | | | | | | | | | | | | | | | | | |

| REF NO. | IC2010 | | | | | | | | | | | | | | | | | | | |
|---|---|---|---|---|---|---|---|---|---|---|---|---|---|---|---|---|---|---|---|---|
| MODE | 1 | 2 | 3 | 4 | 5 | 6 | 7 | 8 | | | | | | | | | | | | |
| POWER ON | 8.5 | 1.6 | 1.6 | 0 | 1.6 | 1.6 | 8.8 | 15.3 | | | | | | | | | | | | |
| STANDBY | 8.5 | 1.6 | 1.6 | 0 | 1.6 | 1.6 | 8.8 | 15.3 | | | | | | | | | | | | |

| REF NO. | IC2011 | | | | | | | | | | | | | | | | | | | |
|---|---|---|---|---|---|---|---|---|---|---|---|---|---|---|---|---|---|---|---|---|
| MODE | 1 | 2 | 3 | 4 | 5 | 6 | 7 | 8 | 9 | 10 | | | | | | | | | | |
| POWER ON | 18.7 | 37.4 | 5.0 | 2.0 | 0.5 | 0 | 0.8 | 0.9 | 0 | 12.6 | | | | | | | | | | |
| STANDBY | 18.7 | 37.4 | 4.5 | 2.2 | 0.5 | 0 | 0.8 | 0.8 | 0 | 12.6 | | | | | | | | | | |

| REF NO. | IC2012 | | | | | | | | | | | | | | | | | | | |
|---|---|---|---|---|---|---|---|---|---|---|---|---|---|---|---|---|---|---|---|---|
| MODE | 1 | 2 | 3 | 4 | 5 | 6 | 7 | 8 | 9 | 10 | | | | | | | | | | |
| POWER ON | 11.0 | 35.5 | 0 | 2.1 | 0.5 | 0 | 0 | 0 | 0 | 5.4 | | | | | | | | | | |
| STANDBY | 11.0 | 35.5 | 0 | 2.1 | 0.5 | 0 | 0 | 0 | 0 | 5.4 | | | | | | | | | | |

| REF NO. | IC2501 | | | | | | | | | | | | | | | | | | | |
|---|---|---|---|---|---|---|---|---|---|---|---|---|---|---|---|---|---|---|---|---|
| MODE | 1 | 2 | 3 | 4 | 5 | 6 | 7 | 8 | 9 | 10 | 11 | 12 | 13 | 14 | 15 | 16 | 17 | 18 | 19 | 20 |
| CD PLAY | 11.7 | 11.7 | 1.2 | 3.3 | 1.6 | 1.6 | 3.1 | 3.3 | 0 | 0 | 0 | 0 | 7.8 | 1.6 | 1.6 | 1.6 | 3.3 | 3.3 | 0 | 0 |
| STANDBY | 11.7 | 11.7 | 1.2 | 3.3 | 1.6 | 1.6 | 3.1 | 3.3 | 0 | 0 | 0 | 0 | 7.8 | 1.6 | 1.6 | 1.6 | 3.3 | 3.3 | 0 | 0 |

| REF NO. | IC2501 | | | | | | | | | | | | | | | | | | | |
|---|---|---|---|---|---|---|---|---|---|---|---|---|---|---|---|---|---|---|---|---|
| MODE | 21 | 22 | 23 | 24 | 25 | 26 | 27 | 28 | 29 | 30 | 31 | 32 | 33 | 34 | 35 | 36 | 37 | 38 | 39 | 40 |
| CD PLAY | 3.3 | 11.8 | 29.0 | 29.0 | 0 | 0 | 18.1 | 18.1 | 37.4 | 37.4 | 37.4 | 18.1 | 0 | 0 | 18.1 | 37.4 | 37.4 | 37.4 | 18.1 | 18.1 |
| STANDBY | 3.3 | 11.8 | 29.0 | 29.0 | 0 | 0 | 18.1 | 18.1 | 37.4 | 37.4 | 37.4 | 18.0 | 0 | 0 | 18.1 | 37.4 | 37.4 | 37.4 | 18.1 | 18.1 |

| REF NO. | IC2501 | | | | | | | | | | | | | | | | | | | |
|---|---|---|---|---|---|---|---|---|---|---|---|---|---|---|---|---|---|---|---|---|
| MODE | 41 | 42 | 43 | 44 | | | | | | | | | | | | | | | | |
| CD PLAY | 0 | 0 | 29.0 | 29.0 | | | | | | | | | | | | | | | | |
| STANDBY | 0 | 0 | 29.0 | 29.0 | | | | | | | | | | | | | | | | |

| REF NO. | IC2502 | | | | | | | | | | | | | | | | | | | |
|---|---|---|---|---|---|---|---|---|---|---|---|---|---|---|---|---|---|---|---|---|
| MODE | 1 | 2 | 3 | 4 | 5 | 6 | 7 | 8 | 9 | 10 | 11 | 12 | 13 | 14 | 15 | 16 | 17 | 18 | 19 | 20 |
| CD PLAY | 11.7 | 11.7 | 1.2 | 3.3 | 1.6 | 1.6 | 3.1 | 3.3 | 0 | 0 | 0 | 0 | 7.8 | 1.6 | 1.6 | 1.6 | 3.3 | 3.3 | 0 | 0 |
| STANDBY | 11.7 | 11.7 | 1.2 | 3.3 | 1.6 | 1.6 | 3.1 | 3.3 | 0 | 0 | 0 | 0 | 7.8 | 1.6 | 1.6 | 1.6 | 3.3 | 3.3 | 0 | 0 |

**SA-AKX76PH/PN MAIN P.C.B.**

## 16.1.3. Main P.C.B. (3/6)

| REF NO. | IC2502 | | | | | | | | | | | | | | | | | | | |
|---|---|---|---|---|---|---|---|---|---|---|---|---|---|---|---|---|---|---|---|---|
| MODE | 21 | 22 | 23 | 24 | 25 | 26 | 27 | 28 | 29 | 30 | 31 | 32 | 33 | 34 | 35 | 36 | 37 | 38 | 39 | 40 |
| CD PLAY | 0 | 11.8 | 29.0 | 29.0 | 0 | 0 | 18.1 | 18.1 | 37.4 | 37.4 | 37.4 | 18.1 | 0 | 0 | 18.1 | 37.4 | 37.4 | 37.4 | 18.1 | 18.1 |
| STANDBY | 0 | 11.8 | 29.0 | 29.0 | 0 | 0 | 18.1 | 18.1 | 37.4 | 37.4 | 37.4 | 18.0 | 0 | 0 | 18.1 | 37.4 | 37.4 | 37.4 | 18.1 | 18.1 |

| REF NO. | IC2502 | | | | | | | | | | | | | | | | | | | |
|---|---|---|---|---|---|---|---|---|---|---|---|---|---|---|---|---|---|---|---|---|
| MODE | 41 | 42 | 43 | 44 | | | | | | | | | | | | | | | | |
| CD PLAY | 0 | 0 | 29.0 | 29.0 | | | | | | | | | | | | | | | | |
| STANDBY | 0 | 0 | 29.0 | 29.0 | | | | | | | | | | | | | | | | |

| REF NO. | IC2503 | | | | | | | | | | | | | | | | | | | |
|---|---|---|---|---|---|---|---|---|---|---|---|---|---|---|---|---|---|---|---|---|
| MODE | 1 | 2 | 3 | 4 | 5 | 6 | 7 | 8 | 9 | 10 | 11 | 12 | 13 | 14 | 15 | 16 | 17 | 18 | 19 | 20 |
| CD PLAY | 11.7 | 11.7 | 1.2 | 3.3 | 1.6 | 1.6 | 3.1 | 3.3 | 0 | 0 | 0 | 0 | 7.8 | 1.6 | 1.6 | 1.6 | 3.3 | 3.3 | 0 | 0 |
| STANDBY | 11.7 | 11.7 | 1.2 | 3.3 | 1.6 | 1.6 | 3.1 | 3.3 | 0 | 0 | 0 | 0 | 7.8 | 1.6 | 1.6 | 1.6 | 3.3 | 3.3 | 0 | 0 |

| REF NO. | IC2503 | | | | | | | | | | | | | | | | | | | |
|---|---|---|---|---|---|---|---|---|---|---|---|---|---|---|---|---|---|---|---|---|
| MODE | 21 | 22 | 23 | 24 | 25 | 26 | 27 | 28 | 29 | 30 | 31 | 32 | 33 | 34 | 35 | 36 | 37 | 38 | 39 | 40 |
| CD PLAY | 0 | 11.8 | 29.0 | 29.0 | 0 | 0 | 18.1 | 18.1 | 37.4 | 37.4 | 37.4 | 18.1 | 0 | 0 | 18.1 | 37.4 | 37.4 | 37.4 | 18.1 | 18.1 |
| STANDBY | 0 | 11.8 | 29.0 | 29.0 | 0 | 0 | 18.1 | 18.1 | 37.4 | 37.4 | 37.4 | 18.1 | 0 | 0 | 18.1 | 37.4 | 37.4 | 37.4 | 18.1 | 18.1 |

| REF NO. | IC2503 | | | | | | | | | | | | | | | | | | | |
|---|---|---|---|---|---|---|---|---|---|---|---|---|---|---|---|---|---|---|---|---|
| MODE | 41 | 42 | 43 | 44 | | | | | | | | | | | | | | | | |
| CD PLAY | 0 | 0 | 29.0 | 29.0 | | | | | | | | | | | | | | | | |
| STANDBY | 0 | 0 | 29.0 | 29.0 | | | | | | | | | | | | | | | | |

| REF NO. | IC8001 | | | | | | | | | | | | | | | | | | | |
|---|---|---|---|---|---|---|---|---|---|---|---|---|---|---|---|---|---|---|---|---|
| MODE | 1 | 2 | 3 | 4 | 5 | 6 | 7 | 8 | 9 | 10 | 11 | 12 | 13 | 14 | 15 | 16 | 17 | 18 | 19 | 20 |
| CD PLAY | 3.2 | 1.3 | 1.1 | 1.2 | 1.2 | 1.3 | 3.2 | 1.2 | 0 | 3.2 | 3.2 | 3.2 | 0 | 0 | 0 | 0 | 0 | 3.2 | 0 | 0 |
| STANDBY | 3.2 | 1.3 | 1.1 | 1.2 | 1.2 | 1.3 | 3.2 | 1.2 | 0 | 3.2 | 3.2 | 3.2 | 0 | 0 | 0 | 0 | 0 | 3.2 | 0 | 0 |

| REF NO. | IC8001 | | | | | | | | | | | | | | | | | | | |
|---|---|---|---|---|---|---|---|---|---|---|---|---|---|---|---|---|---|---|---|---|
| MODE | 21 | 22 | 23 | 24 | 25 | 26 | 27 | 28 | 29 | 30 | 31 | 32 | 33 | 34 | 35 | 36 | 37 | 38 | 39 | 40 |
| CD PLAY | 0 | 0 | 0 | 0 | 3.2 | 3.2 | 1.3 | 3.2 | 3.2 | 3.2 | 3.2 | 3.2 | 0.6 | 3.0 | 3.2 | 0 | 1.2 | 1.2 | 1.2 | 0.8 |
| STANDBY | 0 | 0 | 0 | 0 | 3.2 | 3.2 | 1.3 | 3.2 | 3.2 | 3.2 | 3.2 | 3.2 | 0.6 | 3.0 | 3.2 | 0 | 1.2 | 1.2 | 1.2 | 0.8 |

| REF NO. | IC8001 | | | | | | | | | | | | | | | | | | | |
|---|---|---|---|---|---|---|---|---|---|---|---|---|---|---|---|---|---|---|---|---|
| MODE | 41 | 42 | 43 | 44 | 45 | 46 | 47 | 48 | 49 | 50 | 51 | 52 | 53 | 54 | 55 | 56 | 57 | 58 | 59 | 60 |
| CD PLAY | 0 | 0 | 0.8 | 0.8 | 3.2 | 0 | 1.2 | 1.7 | 1.7 | 1.5 | 0 | 1.5 | 1.6 | 3.3 | 1.6 | 1.6 | 1.9 | 0 | 1.7 | 1.7 |
| STANDBY | 0 | 0 | 0.8 | 0.8 | 3.2 | 0 | 1.2 | 1.7 | 1.7 | 1.5 | 0 | 1.5 | 1.6 | 3.3 | 1.6 | 1.6 | 1.9 | 0 | 1.7 | 1.7 |

| REF NO. | IC8001 | | | | | | | | | | | | | | | | | | | |
|---|---|---|---|---|---|---|---|---|---|---|---|---|---|---|---|---|---|---|---|---|
| MODE | 61 | 62 | 63 | 64 | 65 | 66 | 67 | 68 | 69 | 70 | 71 | 72 | 73 | 74 | 75 | 76 | 77 | 78 | 79 | 80 |
| CD PLAY | 1.7 | 3.2 | 0 | 3.3 | 3.2 | 3.2 | 0.8 | 1.0 | 0 | 1.0 | 1.2 | 1.6 | 1.6 | 1.4 | 1.4 | 0.4 | 0 | 3.3 | 3.3 | 0 |
| STANDBY | 1.7 | 3.2 | 0 | 3.3 | 3.2 | 3.2 | 0.8 | 1.0 | 0 | 1.0 | 1.2 | 1.6 | 1.6 | 1.4 | 1.4 | 0.4 | 0 | 3.3 | 3.3 | 0 |

| REF NO. | IC8001 | | | | | | | | | | | | | | | | | | | |
|---|---|---|---|---|---|---|---|---|---|---|---|---|---|---|---|---|---|---|---|---|
| MODE | 81 | 82 | 83 | 84 | 85 | 86 | 87 | 88 | 89 | 90 | 91 | 92 | 93 | 94 | 95 | 96 | 97 | 98 | 99 | 100 |
| CD PLAY | 0 | 0 | 0 | 0 | 0 | 0 | 1.2 | 3.3 | 1.2 | 1.2 | 0 | 3.3 | 0 | 0 | 0 | 1.6 | 3.2 | 0 | 0 | 0 |
| STANDBY | 0 | 0 | 0 | 0 | 0 | 0 | 1.2 | 3.3 | 1.2 | 1.2 | 0 | 3.3 | 0 | 0 | 0 | 1.6 | 3.2 | 0 | 0 | 0 |

**SA-AKX76PH/PN MAIN P.C.B.**

## 16.1.4. Main P.C.B. (4/6)

| REF NO. | IC8001 | | | | | | | | | | | | | | | | | | | |
|---|---|---|---|---|---|---|---|---|---|---|---|---|---|---|---|---|---|---|---|---|
| MODE | 101 | 102 | 103 | 104 | 105 | 106 | 107 | 108 | 109 | 110 | 111 | 112 | 113 | 114 | 115 | 116 | 117 | 118 | 119 | 120 |
| CD PLAY | 1.2 | 0 | 3.2 | 3.1 | 3.0 | 3.2 | 3.1 | 3.1 | 0 | 0 | 0 | 3.2 | 3.1 | 3.0 | 1.6 | 1.4 | 0.8 | 1.0 | 3.2 | 3.2 |
| STANDBY | 1.2 | 0 | 3.2 | 3.1 | 3.0 | 3.2 | 3.1 | 3.1 | 0 | 0 | 0 | 3.2 | 3.1 | 3.0 | 1.6 | 1.4 | 0.8 | 1.0 | 3.2 | 3.2 |

| REF NO. | IC8001 | | | | | | | | | | | | | | | | | | | |
|---|---|---|---|---|---|---|---|---|---|---|---|---|---|---|---|---|---|---|---|---|
| MODE | 121 | 122 | 123 | 124 | 125 | 126 | 127 | 128 | 129 | 130 | 131 | 132 | 133 | 134 | 135 | 136 | 137 | 138 | 139 | 140 |
| CD PLAY | 1.2 | 0 | 3.0 | 3.2 | 3.0 | 0 | 0 | 3.2 | 3.0 | 0 | 3.2 | 0 | 0 | 3.2 | 0 | 1.6 | 1.6 | 1.6 | 0 | 0 |
| STANDBY | 1.2 | 0 | 3.0 | 3.2 | 3.0 | 0 | 0 | 3.2 | 3.0 | 0 | 3.2 | 0 | 0 | 3.2 | 0 | 1.6 | 1.6 | 1.6 | 0 | 0 |

| REF NO. | IC8001 | | | | | | | | | | | | | | | | | | | |
|---|---|---|---|---|---|---|---|---|---|---|---|---|---|---|---|---|---|---|---|---|
| MODE | 141 | 142 | 143 | 144 | | | | | | | | | | | | | | | | |
| CD PLAY | 0 | 1.0 | 1.1 | 1.1 | | | | | | | | | | | | | | | | |
| STANDBY | 0 | 1.0 | 1.1 | 1.1 | | | | | | | | | | | | | | | | |

| REF NO. | IC8051 | | | | | | | | | | | | | | | | | | | |
|---|---|---|---|---|---|---|---|---|---|---|---|---|---|---|---|---|---|---|---|---|
| MODE | 1 | 2 | 3 | 4 | 5 | 6 | 7 | 8 | 9 | 10 | 11 | 12 | 13 | 14 | 15 | 16 | 17 | 18 | 19 | 20 |
| CD PLAY | 3.3 | 0 | 1.3 | 0 | 0.6 | 1.2 | 3.3 | 1.4 | 1.3 | 0 | 1.4 | 0.8 | 3.3 | 3.2 | 3.3 | 3.2 | 3.2 | 0 | 0 | 0 |
| STANDBY | 3.3 | 0 | 0 | 0 | 0 | 0 | 3.3 | 0 | 0 | 0 | 0 | 0 | 3.3 | 3.3 | 3.3 | 3.3 | 3.3 | 0 | 0 | 0 |

| REF NO. | IC8051 | | | | | | | | | | | | | | | | | | | |
|---|---|---|---|---|---|---|---|---|---|---|---|---|---|---|---|---|---|---|---|---|
| MODE | 21 | 22 | 23 | 24 | 25 | 26 | 27 | 28 | 29 | 30 | 31 | 32 | 33 | 34 | 35 | 36 | 37 | 38 | 39 | 40 |
| CD PLAY | 0 | 1.8 | 1.8 | 1.6 | 3.3 | 0 | 1.7 | 1.7 | 1.7 | 1.7 | 3.3 | 3.3 | 0 | 3.3 | 1.4 | 3.3 | 0 | 3.3 | 0.5 | 0.6 |
| STANDBY | 0 | 0 | 3.3 | 0 | 3.3 | 0 | 3.3 | 3.3 | 0 | 3.3 | 3.3 | 3.3 | 0 | 3.3 | 1.4 | 3.3 | 0 | 3.3 | 0 | 0 |

| REF NO. | IC8051 | | | | | | | | | | | | | | | | | | | |
|---|---|---|---|---|---|---|---|---|---|---|---|---|---|---|---|---|---|---|---|---|
| MODE | 41 | 42 | 43 | 44 | 45 | 46 | 47 | 48 | 49 | 50 | | | | | | | | | | |
| CD PLAY | 0 | 0 | 0.6 | 3.3 | 1.3 | 0.6 | 0 | 0.6 | 1.3 | 0 | | | | | | | | | | |
| STANDBY | 0 | 0 | 0 | 3.3 | 0 | 0 | 0 | 0 | 0 | 0 | | | | | | | | | | |

| REF NO. | IC8251 | | | | | | | | | | | | | | | | | | | |
|---|---|---|---|---|---|---|---|---|---|---|---|---|---|---|---|---|---|---|---|---|
| MODE | 1 | 2 | 3 | 4 | 5 | 6 | 7 | 8 | 9 | 10 | 11 | 12 | 13 | 14 | 15 | 16 | 17 | 18 | 19 | 20 |
| CD PLAY | 1.7 | 0 | 0 | 0 | 0 | 3.3 | 3.3 | 5.6 | 0 | 0 | 2.9 | 2.9 | 2.7 | 3.0 | 2.8 | 2.9 | 2.3 | 3.3 | 5.6 | 0 |
| STANDBY | 1.7 | 0 | 0 | 0 | 0 | 3.3 | 3.3 | 5.6 | 0 | 0 | 2.9 | 2.9 | 2.9 | 2.9 | 2.9 | 2.9 | 2.9 | 2.8 | 5.6 | 0 |

| REF NO. | IC8251 | | | | | | | | | | | | | | | | | | | |
|---|---|---|---|---|---|---|---|---|---|---|---|---|---|---|---|---|---|---|---|---|
| MODE | 21 | 22 | 23 | 24 | 25 | 26 | 27 | 28 | | | | | | | | | | | | |
| CD PLAY | 1.5 | 0 | 1.5 | 0 | 0 | 1.7 | 1.7 | 3.3 | | | | | | | | | | | | |
| STANDBY | 1.5 | 0 | 1.7 | 0 | 0 | 1.7 | 1.7 | 3.3 | | | | | | | | | | | | |

| REF NO. | IC8401 | | | | | | | | | | | | | | | | | | | |
|---|---|---|---|---|---|---|---|---|---|---|---|---|---|---|---|---|---|---|---|---|
| MODE | 1 | 2 | 3 | 4 | 5 | 6 | 7 | 8 | | | | | | | | | | | | |
| CD PLAY | 1.6 | 2.4 | 3.3 | 0 | 3.2 | 0.9 | 3.3 | 3.3 | | | | | | | | | | | | |
| STANDBY | 2.3 | 2.8 | 3.3 | 0 | 3.2 | 0.5 | 3.3 | 3.3 | | | | | | | | | | | | |

| REF NO. | IC8501 | | | | | | | | | | | | | | | | | | | |
|---|---|---|---|---|---|---|---|---|---|---|---|---|---|---|---|---|---|---|---|---|
| MODE | 1 | 2 | 3 | 4 | 5 | 6 | 7 | 8 | 9 | 10 | 11 | 12 | 13 | 14 | 15 | 16 | 17 | 18 | 19 | 20 |
| CD PLAY | 0 | 1.0 | 1.2 | 1.2 | 1.2 | 0 | 0 | 3.3 | 0 | 0 | 0 | 0 | 0 | 0 | 0 | 1.2 | 0 | 0 | 0 | 0 |
| STANDBY | 0 | 1.0 | 1.2 | 1.2 | 1.2 | 0 | 0 | 3.3 | 0 | 0 | 0 | 0 | 0 | 0 | 0 | 1.2 | 0 | 0 | 0 | 0 |

**SA-AKX76PH/PN MAIN P.C.B.**

## 16.1.5. Main P.C.B. (5/6)

| REF NO. | IC8501 | | | | | | | | | | | | | | | | | | | |
|---|---|---|---|---|---|---|---|---|---|---|---|---|---|---|---|---|---|---|---|---|
| MODE | 21 | 22 | 23 | 24 | 25 | 26 | 27 | 28 | 29 | 30 | 31 | 32 | 33 | 34 | 35 | 36 | 37 | 38 | 39 | 40 |
| CD PLAY | 0 | 3.3 | 0 | 0 | 0 | 0 | 0 | 0 | 0 | 0 | 0 | 0 | 0 | 3.3 | 3.3 | 3.3 | 0 | 0 | 0 | 0 |
| STANDBY | 0 | 3.3 | 0 | 0 | 0 | 0 | 0 | 0 | 0 | 0 | 0 | 0 | 0 | 3.3 | 3.3 | 3.3 | 0 | 0 | 0 | 0 |

| REF NO. | IC8501 | | | | | | | | | | | | | | | | | | | |
|---|---|---|---|---|---|---|---|---|---|---|---|---|---|---|---|---|---|---|---|---|
| MODE | 41 | 42 | 43 | 44 | 45 | 46 | 47 | 48 | 49 | 50 | 51 | 52 | 53 | 54 | 55 | 56 | 57 | 58 | 59 | 60 |
| CD PLAY | 0 | 0 | 0 | 0 | 0 | 0 | 0 | 0 | 0 | 0 | 0 | 0 | 0 | 3.3 | 0 | 0 | 0 | 0 | 0 | 0 |
| STANDBY | 0 | 0 | 0 | 0 | 0 | 0 | 0 | 0 | 0 | 0 | 0 | 0 | 0 | 3.3 | 0 | 0 | 0 | 0 | 0 | 0 |

| REF NO. | IC8501 | | | | | | | | | | | | | | | | | | | |
|---|---|---|---|---|---|---|---|---|---|---|---|---|---|---|---|---|---|---|---|---|
| MODE | 61 | 62 | 63 | 64 | 65 | 66 | 67 | 68 | 69 | 70 | 71 | 72 | 73 | 74 | 75 | 76 | 77 | 78 | 79 | 80 |
| CD PLAY | 0 | 3.3 | 3.3 | 3.3 | 3.3 | 0 | 0 | 0 | 0 | 0 | 0 | 0 | 0 | 0 | 0 | 0 | 0 | 0 | 0 | 0 |
| STANDBY | 0 | 3.3 | 3.3 | 3.3 | 3.3 | 0 | 0 | 0 | 0 | 0 | 0 | 0 | 0 | 0 | 0 | 0 | 0 | 0 | 0 | 0 |

| REF NO. | IC8501 | | | | | | | | | | | | | | | | | | | |
|---|---|---|---|---|---|---|---|---|---|---|---|---|---|---|---|---|---|---|---|---|
| MODE | 81 | 82 | 83 | 84 | 85 | 86 | 87 | 88 | 89 | 90 | 91 | 92 | 93 | 94 | 95 | 96 | 97 | 98 | 99 | 100 |
| CD PLAY | 0 | 0 | 0 | 0 | 0 | 3.3 | 3.3 | 3.3 | 3.3 | 3.3 | 3.3 | 3.3 | 3.3 | 0 | 0 | 0 | 0 | 3.3 | 0 | 0 |
| STANDBY | 0 | 0 | 0 | 0 | 0 | 3.3 | 3.3 | 3.3 | 3.3 | 3.3 | 3.3 | 3.3 | 3.3 | 0 | 0 | 0 | 0 | 3.3 | 0 | 0 |

| REF NO. | IC8501 | | | | | | | | | | | | | | | | | | | |
|---|---|---|---|---|---|---|---|---|---|---|---|---|---|---|---|---|---|---|---|---|
| MODE | 101 | 102 | 103 | 104 | 105 | 106 | 107 | 108 | 109 | 110 | 111 | 112 | 113 | 114 | 115 | 116 | 117 | 118 | 119 | 120 |
| CD PLAY | 3.3 | 0 | 0 | 0 | 0 | 3.3 | 3.3 | 3.3 | 0 | 0 | 0 | 0 | 0 | 0 | 3.3 | 3.3 | 3.3 | 0 | 0 | 0 |
| STANDBY | 3.3 | 0 | 0 | 0 | 0 | 3.3 | 3.3 | 3.3 | 0 | 0 | 0 | 0 | 0 | 0 | 3.3 | 3.3 | 3.3 | 0 | 0 | 0 |

| REF NO. | IC8501 | | | | | | | | | | | | | | | | | | | |
|---|---|---|---|---|---|---|---|---|---|---|---|---|---|---|---|---|---|---|---|---|
| MODE | 121 | 122 | 123 | 124 | 125 | 126 | 127 | 128 | 129 | 130 | 131 | 132 | 133 | 134 | 135 | 136 | 137 | 138 | 139 | 140 |
| CD PLAY | 0 | 3.3 | 0 | 0 | 0 | 0 | 0 | 3.3 | 3.3 | 0 | 0 | 0 | 0 | 0 | 0 | 3.3 | 0 | 0 | 0 | 0 |
| STANDBY | 0 | 3.3 | 0 | 0 | 0 | 0 | 0 | 3.3 | 3.3 | 0 | 0 | 0 | 0 | 0 | 0 | 3.3 | 0 | 0 | 0 | 0 |

| REF NO. | IC8501 | | | | | | | | | | | | | | | | | | | |
|---|---|---|---|---|---|---|---|---|---|---|---|---|---|---|---|---|---|---|---|---|
| MODE | 141 | 142 | 143 | 144 | 145 | 146 | 147 | 148 | 149 | 150 | 151 | 152 | 153 | | | | | | | |
| CD PLAY | 0 | 3.3 | 0 | 3.3 | 0 | 0 | 0 | 0 | 0 | 3.3 | 0 | 0 | 0 | | | | | | | |
| STANDBY | 0 | 3.3 | 0 | 3.3 | 0 | 0 | 0 | 0 | 0 | 3.3 | 0 | 0 | 0 | | | | | | | |

| REF NO. | Q2001 | | | | Q2002 | | | | Q2003 | | | | Q2004 | | | | Q2006 | | | |
|---|---|---|---|---|---|---|---|---|---|---|---|---|---|---|---|---|---|---|---|---|
| MODE | E | C | B | | E | C | B | | E | C | B | | E | C | B | | E | C | B | |
| POWER ON | 0 | 3.3 | 0 | | 7.8 | 15.3 | 8.4 | | 15.3 | 0 | 15.3 | | 0 | 3.3 | 0 | | 0 | 11.6 | 1.0 | |
| STANDBY | 0 | 3.3 | 0 | | 7.8 | 15.3 | 8.4 | | 15.4 | 0 | 15.3 | | 0 | 3.3 | 0 | | 0 | 11.6 | 1.0 | |

| REF NO. | Q2008 | | | | Q2010 | | | | Q2012 | | | | Q2022 | | | | Q2024 | | | |
|---|---|---|---|---|---|---|---|---|---|---|---|---|---|---|---|---|---|---|---|---|
| MODE | E | C | B | | E | C | B | | E | C | B | | E | C | B | | E | C | B | |
| POWER ON | 0 | 0 | 11.6 | | 0 | 3.3 | 0 | | 0 | 12.2 | 0.8 | | 12.3 | 15.4 | 12.9 | | 0 | 1.8 | 30.0 | |
| STANDBY | 0 | 0 | 11.6 | | 0 | 3.2 | 0 | | 0 | 12.2 | 0.8 | | 12.3 | 15.4 | 12.9 | | 0 | 1.8 | 30.0 | |

| REF NO. | Q2631 | | | | Q2632 | | | | Q2633 | | | | Q2634 | | | | Q3301 | | | |
|---|---|---|---|---|---|---|---|---|---|---|---|---|---|---|---|---|---|---|---|---|
| MODE | E | C | B | | E | C | B | | E | C | B | | E | C | B | | E | C | B | |
| POWER ON | 18.1 | 37.4 | 18.1 | | 18.1 | 37.4 | 18.1 | | 0 | 3.3 | 0 | | 37.4 | 0 | 37.3 | | 0 | 0.5 | 0 | |
| STANDBY | 18.1 | 37.4 | 18.1 | | 18.1 | 37.4 | 18.1 | | 0 | 3.3 | 0 | | 37.4 | 0 | 37.3 | | 0 | 0.5 | 0 | |

**SA-AKX76PH/PN MAIN P.C.B.**

## 16.1.6. Main P.C.B. (6/6)

| REF NO. | QR2001 | | | | QR2002 | | | | QR2003 | | | | | | | | | | | |
|---|---|---|---|---|---|---|---|---|---|---|---|---|---|---|---|---|---|---|---|---|
| MODE | E | C | B | | E | C | B | | E | C | B | | | | | | | | | |
| POWER ON | 0 | 0 | 3.3 | | 0 | 3.3 | 0 | | 0 | 3.3 | 0 | | | | | | | | | |
| STANDBY | 0 | 0 | 3.3 | | 0 | 3.3 | 0 | | 0 | 3.3 | 0 | | | | | | | | | |

| REF NO. | Q2023 | | | | Q3200 | | | | Q3202 | | | | Q8201 | | | | QR102 | | | |
|---|---|---|---|---|---|---|---|---|---|---|---|---|---|---|---|---|---|---|---|---|
| MODE | E | C | B | | E | C | B | | E | C | B | | E | C | B | | E | C | B | |
| CD PLAY | 0 | 0.6 | 0 | | 0 | 12.0 | 1.0 | | 0 | 12.0 | 1.2 | | 3.1 | 0 | 2.4 | | 5.1 | 0 | 5.4 | |
| STANDBY | 0 | 0.6 | 0 | | 0 | 12.0 | 1.0 | | 0 | 12.0 | 1.2 | | 3.3 | 0 | 3.3 | | 5.1 | 0 | 5.4 | |

| REF NO. | QR3000 | | | | QR3102 | | | | QR3103 | | | | QR3104 | | | | | | | |
|---|---|---|---|---|---|---|---|---|---|---|---|---|---|---|---|---|---|---|---|---|
| MODE | E | C | B | | E | C | B | | E | C | B | | E | C | B | | | | | |
| CD PLAY | 0 | 5.3 | 0 | | 0 | 5.0 | 5.0 | | 0 | 5.0 | 5.0 | | 0 | 5.0 | 2.0 | | | | | |
| STANDBY | 0 | 5.3 | 0 | | 0 | 5.0 | 5.0 | | 0 | 5.0 | 5.0 | | 0 | 5.0 | 2.0 | | | | | |

**SA-AKX76PH/PN MAIN P.C.B.**

## 16.1.7. Panel P.C.B.

| REF NO. | IC6000 | | | | | | | | | | | | | | | | | | | |
|---|---|---|---|---|---|---|---|---|---|---|---|---|---|---|---|---|---|---|---|---|
| MODE | 1 | 2 | 3 | 4 | 5 | 6 | 7 | 8 | 9 | 10 | 11 | 12 | 13 | 14 | 15 | 16 | 17 | 18 | 19 | 20 |
| CD PLAY | 0 | 0 | 0 | 0 | 1.9 | 0 | 0 | 0 | 0.7 | 0 | 0 | 0 | 3.3 | -16.1 | -14.1 | -21.5 | -21.5 | -19.7 | -21.5 | -17.8 |
| STANDBY | 0 | 0 | 0 | 0 | 1.9 | 0 | 0 | 0 | 0.7 | 0 | 0 | 0 | 3.3 | -16.1 | -14.1 | -21.5 | -21.5 | -19.7 | -21.5 | -17.8 |

| REF NO. | IC6000 | | | | | | | | | | | | | | | | | | | |
|---|---|---|---|---|---|---|---|---|---|---|---|---|---|---|---|---|---|---|---|---|
| MODE | 21 | 22 | 23 | 24 | 25 | 26 | 27 | 28 | 29 | 30 | 31 | 32 | 33 | 34 | 35 | 36 | 37 | 38 | 39 | 40 |
| CD PLAY | -19.5 | -21.5 | -23.4 | -21.5 | -15.9 | -19.6 | -17.8 | -21.5 | -21.5 | -21.5 | -21.5 | -21.5 | -21.5 | -21.5 | -21.5 | -21.5 | -21.5 | -21.5 | -21.5 | -21.5 |
| STANDBY | -19.5 | -21.5 | -23.4 | -21.5 | -15.9 | -19.6 | -17.8 | -21.5 | -21.5 | -21.5 | -21.5 | -21.5 | -21.5 | -21.5 | -21.5 | -21.5 | -21.5 | -21.5 | -21.5 | -21.5 |

| REF NO. | IC6000 | | | | | | | | | | | | | | | | | | | |
|---|---|---|---|---|---|---|---|---|---|---|---|---|---|---|---|---|---|---|---|---|
| MODE | 41 | 42 | 43 | 44 | | | | | | | | | | | | | | | | |
| CD PLAY | -21.6 | -21.9 | 3.3 | 0 | | | | | | | | | | | | | | | | |
| STANDBY | -21.6 | -21.9 | 3.3 | 0 | | | | | | | | | | | | | | | | |

| REF NO. | Q6000 | | | | Q6001 | | | | QR6000 | | | | QR6003 | | | | QR6004 | | | |
|---|---|---|---|---|---|---|---|---|---|---|---|---|---|---|---|---|---|---|---|---|
| MODE | E | C | B | | E | C | B | | E | C | B | | E | C | B | | E | C | B | |
| CD PLAY | 5.0 | 5.0 | 0 | | 0 | 15.1 | 0 | | 0 | 5.0 | 0 | | 0 | 0 | 3.3 | | 0 | 0 | 3.3 | |
| STANDBY | 5.0 | 5.0 | 0 | | 0 | 15.1 | 0 | | 0 | 5.0 | 0 | | 0 | 0 | 3.3 | | 0 | 0 | 3.3 | |

| REF NO. | QR6005 | | | | QR6008 | | | | | | | | | | | | | | | |
|---|---|---|---|---|---|---|---|---|---|---|---|---|---|---|---|---|---|---|---|---|
| MODE | E | C | B | | E | C | B | | | | | | | | | | | | | |
| CD PLAY | 0 | 0 | 5.0 | | 0 | 0 | 1.0 | | | | | | | | | | | | | |
| STANDBY | 0 | 0 | 5.0 | | 0 | 0 | 1.0 | | | | | | | | | | | | | |

**SA-AKX76PH/PN PANEL P.C.B.**

## 16.1.8. SMPS P.C.B.

| REF NO. | IC5701 | | | | | | | | | | | | | | | | | | | |
|---|---|---|---|---|---|---|---|---|---|---|---|---|---|---|---|---|---|---|---|---|
| MODE | 1 | 2 | 3 | 4 | 5 | 6 | 7 | 8 | | | | | | | | | | | | |
| POWER ON | 0 | 28.0 | 0 | 1.4 | 3.1 | 3.1 | 0 | 8.0 | | | | | | | | | | | | |
| STANDBY | 0 | 28.0 | 0 | 1.4 | 3.1 | 3.1 | 0 | 8.0 | | | | | | | | | | | | |

| REF NO. | IC5790 | | | | | | | | | | | | | | | | | | | |
|---|---|---|---|---|---|---|---|---|---|---|---|---|---|---|---|---|---|---|---|---|
| MODE | 1 | 2 | 3 | 4 | 5 | 6 | 7 | 8 | | | | | | | | | | | | |
| POWER ON | 5.9 | 1.0 | 2.3 | 11.0 | 160.2 | 0 | 0 | 0 | | | | | | | | | | | | |
| STANDBY | 5.9 | 1.0 | 2.3 | 11.0 | 160.2 | 0 | 0 | 0 | | | | | | | | | | | | |

| REF NO. | IC5801 | | | | | | | | | | | | | | | | | | | |
|---|---|---|---|---|---|---|---|---|---|---|---|---|---|---|---|---|---|---|---|---|
| MODE | K | A | R | | | | | | | | | | | | | | | | | |
| POWER ON | 32.0 | 0 | 2.5 | | | | | | | | | | | | | | | | | |
| STANDBY | 32.0 | 0 | 2.5 | | | | | | | | | | | | | | | | | |

| REF NO. | IC5899 | | | | | | | | | | | | | | | | | | | |
|---|---|---|---|---|---|---|---|---|---|---|---|---|---|---|---|---|---|---|---|---|
| MODE | K | A | R | | | | | | | | | | | | | | | | | |
| POWER ON | 32.0 | 0 | 2.5 | | | | | | | | | | | | | | | | | |
| STANDBY | 32.0 | 0 | 2.5 | | | | | | | | | | | | | | | | | |

| REF NO. | Q5701 | | | | Q5711 | | | | Q5720 | | | | Q5721 | | | | Q5803 | | | |
|---|---|---|---|---|---|---|---|---|---|---|---|---|---|---|---|---|---|---|---|---|
| MODE | S | D | G | | E | C | B | | E | C | B | | E | C | B | | E | C | B | |
| POWER ON | 0 | 3.1 | 8.0 | | 0 | 0 | 2.0 | | 28.0 | 28.0 | 0 | | 0 | 28.0 | 2.0 | | 0 | 32.0 | 0.5 | |
| STANDBY | 0 | 3.1 | 8.0 | | 0 | 0 | 2.0 | | 28.0 | 28.0 | 0 | | 0 | 28.0 | 2.0 | | 0 | 32.0 | 0.5 | |

| REF NO. | Q5898 | | | | QR5810 | | | | | | | | | | | | | | | |
|---|---|---|---|---|---|---|---|---|---|---|---|---|---|---|---|---|---|---|---|---|
| MODE | E | C | B | | E | C | B | | | | | | | | | | | | | |
| POWER ON | 0 | 2.0 | 2.8 | | 0 | 0 | 3.0 | | | | | | | | | | | | | |
| STANDBY | 0 | 2.0 | 2.8 | | 0 | 0 | 3.0 | | | | | | | | | | | | | |

**SA-AKX76PH/PN SMPS P.C.B.**

## 16.1.9. Waveform Table

| | | | |
|---|---|---|---|
| WF No. IC2006-12 (PLAY)<br> 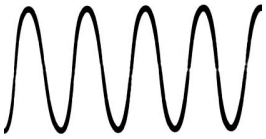 <br>3.8Vp-p(50nsec/div) | WF No. IC2006-13 (PLAY)<br> <br>4Vp-p(50nsec/div) | WF No. IC2006-15 (PLAY)<br> <br>2Vp-p(10usec/div) | WF No. IC2006-16 (PLAY)<br> <br>3.8Vp-p(10usec/div) |
| WF No. IC2008-24 (PLAY)<br> 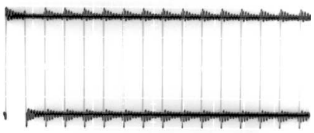 <br>1.8Vp-p(50usec/div) | WF No. IC2008-27 (PLAY)<br> 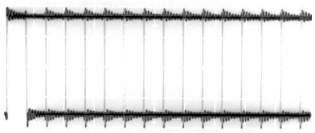 <br>3.2Vp-p(1usec/div) | WF No. IC2008-38,39,40,41,42,43,44,45,46,48,49 (PLAY)<br> 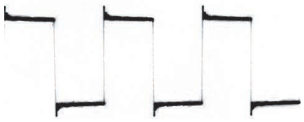 <br>3.2Vp-p(1usec/div) | WF No. IC2501-5,6,14,15 (PLAY)<br> 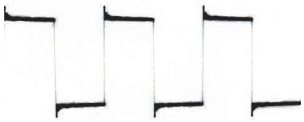 <br>3.2Vp-p(1usec/div) |
| WF No. IC2501-27,28,32,35 (PLAY)<br> 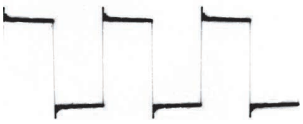 <br>36Vp-p(500nsec/div) | WF No. IC2501-39,40 (PLAY)<br> 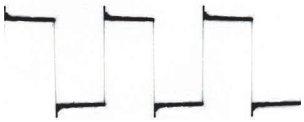 <br>36Vp-p(1usec/div) | WF No. IC2502-5,6,14,15 (PLAY)<br> 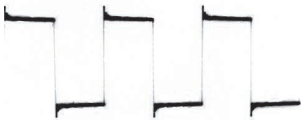 <br>3.2Vp-p(1usec/div) | WF No. IC2502-27,28,32,35 (PLAY)<br> 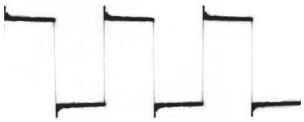 <br>36Vp-p(500nsec/div) |
| WF No. IC2502-39,40 (PLAY)<br> 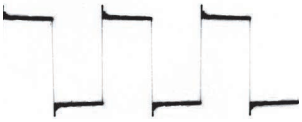 <br>36Vp-p(1usec/div) | WF No. IC2503-5,6,14,15 (PLAY)<br> 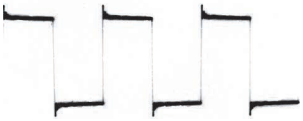 <br>3.2Vp-p(1usec/div) | WF No. IC2503-27,28,32,35 (PLAY)<br> 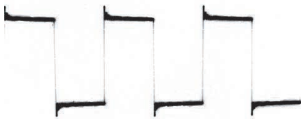 <br>36Vp-p(500nsec/div) | WF No. IC2503-39,40 (PLAY)<br> 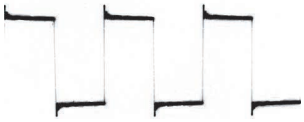 <br>36Vp-p(1usec/div) |

# 17 Exploded View and Replacement Parts List

## 17.1. Exploded View and Mechanical replacement Part List

### 17.1.1. Cabinet Parts Location

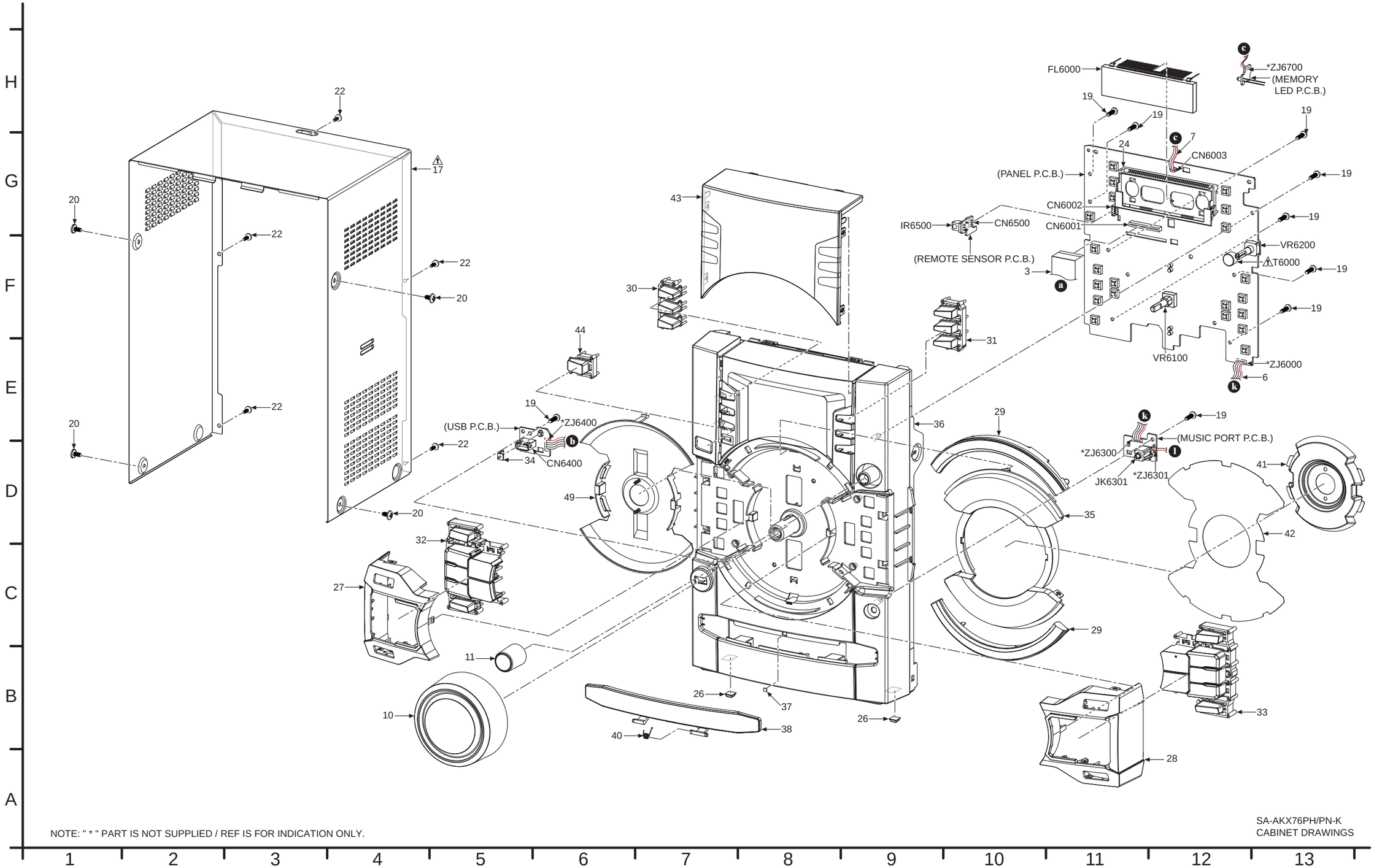


NOTE: " * " PART IS NOT SUPPLIED / REF IS FOR INDICATION ONLY.

SA-AKX76PH/PN-K
CABINET DRAWINGS

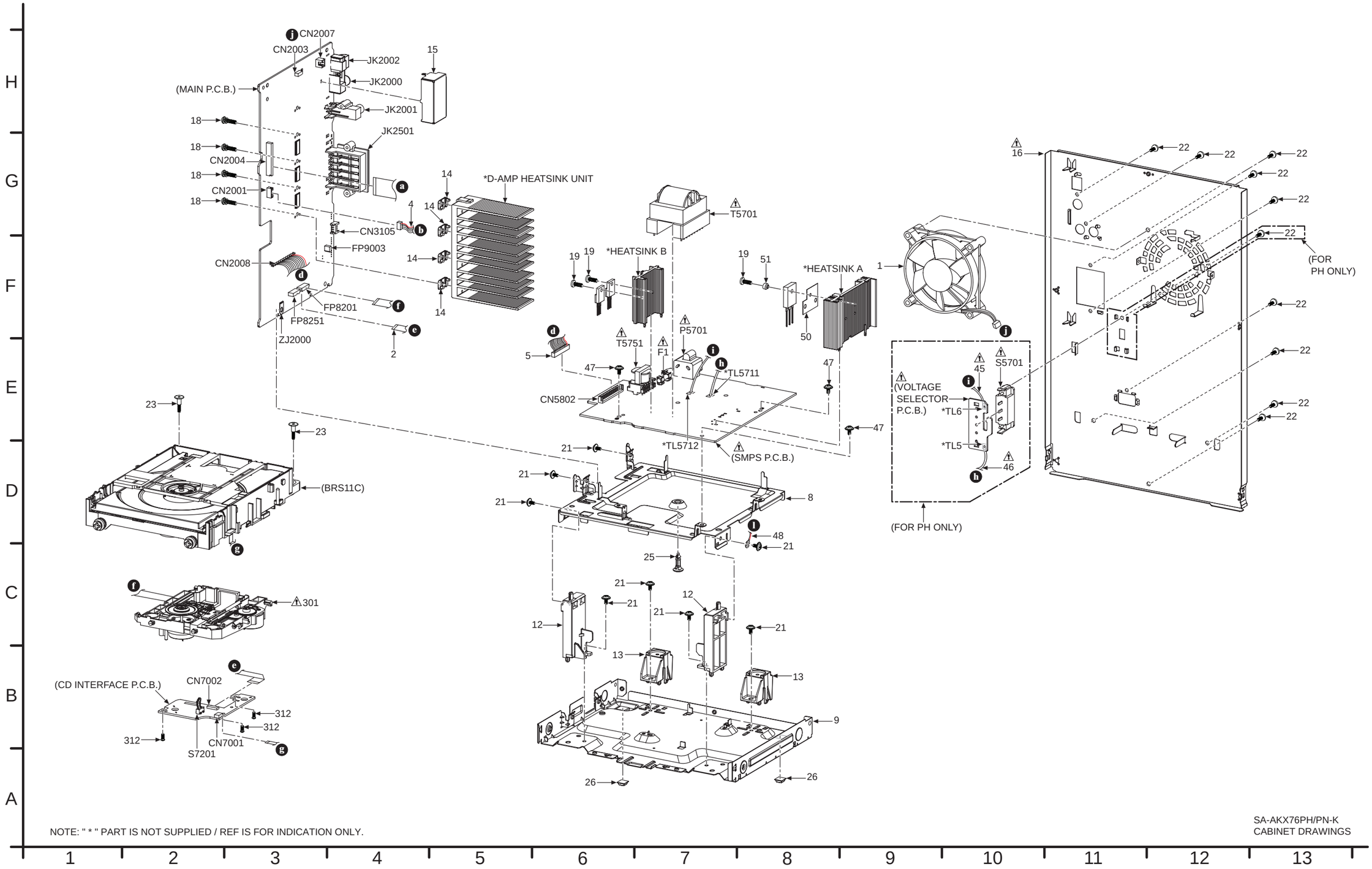


NOTE: " * " PART IS NOT SUPPLIED / REF IS FOR INDICATION ONLY.

SA-AKX76PH/PN-K
CABINET DRAWINGS

### 17.1.2. Packaging

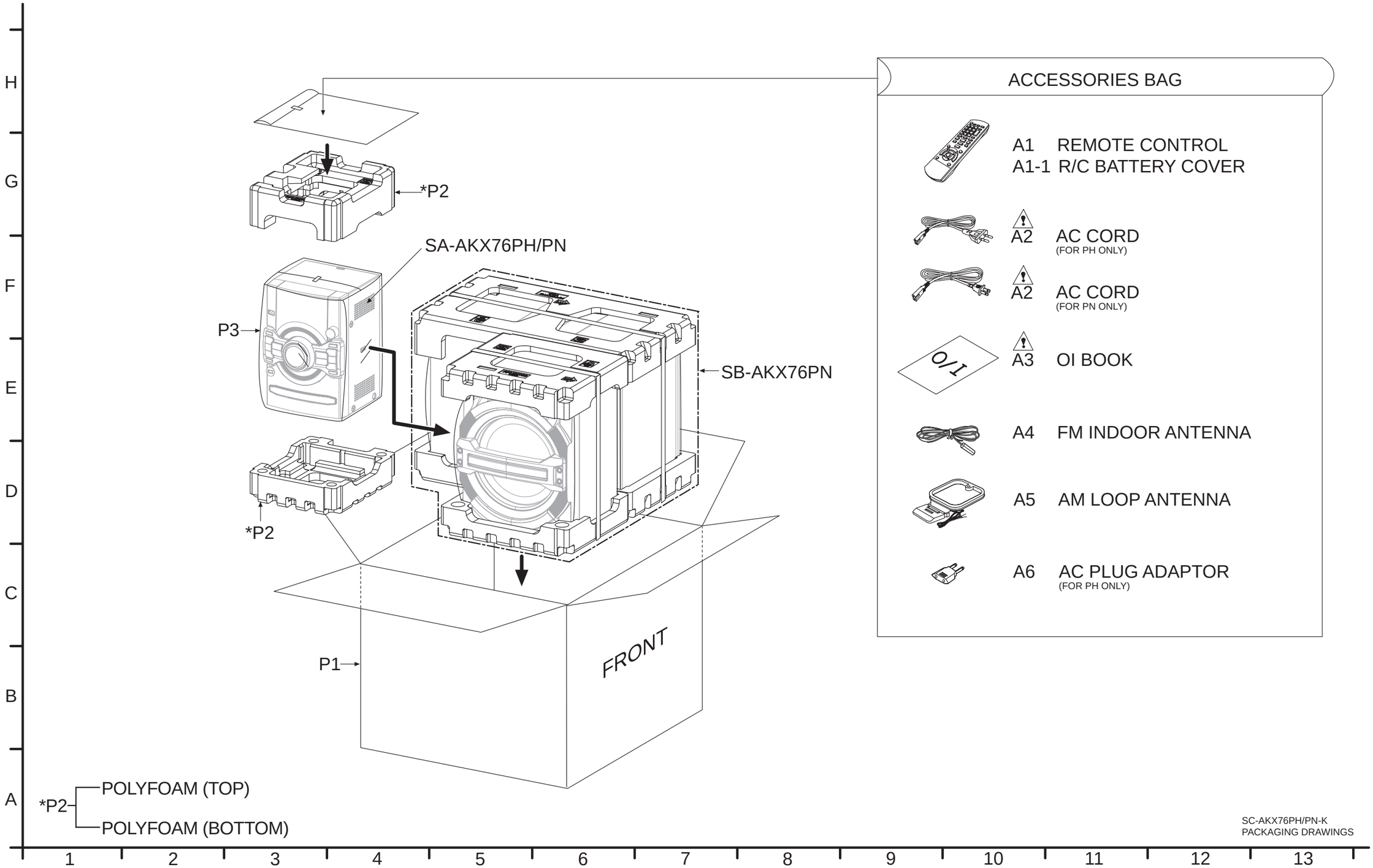

## 17.1.3. Mechanical Replacement Part List

**Important Safety Notice**

*Components identified by ⚠ mark have special characteristics important for safety.*
*When replacing any of these components, use only manufacturer's specified parts.*

**RTL (Retention Time Limited)**

**Note:** The marking (RTL) indicates that the Retention Time is Limited for this item.
After the discontinuation of this assembly in production, the item will continue to be available for a specific period of time. The retention period of availability is dependant on the type of assembly, and in accordance with the laws governing part and product retention. After the end of this period, the assembly will no longer be available.

**Note:**

- When replacing any of these components, be sure to use only manufacturer's specified parts shown in the replacement part list.
- The parenthesized indications on the Remarks column specify the destination & product color (Refer to the cover page for the information).
- Parts without these indications shall be used for all areas.
- This product uses a laser diode. Refer to "Precaution of Laser Diode".
- All parts mentioned are supplied by PAVCJM unless indicated likewise.
- Reference for O/I book languages are as follows:

| | | | | | | | |
|---|---|---|---|---|---|---|---|
| Ar: | Arabic | Du: | Dutch | It: | Italian | Sp: | Spanish |
| Cf: | Canadian French | En: | English | Ko: | Korean | Sw: | Swedish |
| Cz: | Czech | Fr: | French | Po: | Polish | Co: | Traditional Chinese |
| Da: | Danish | Ge: | German | Ru: | Russian | Cn: | Simplified Chinese |
| Pe: | Persian | Ur: | Ukraine | Pr: | Portuguese | Fi: | Finnish |

| Safety | Ref. No. | Part No. | Part Name & Description | Qty | Remarks |
|---|---|---|---|---|---|
| | | | | | |
| | | | CABINET AND CHASSIS | | |
| | | | | | |
| | 1 | L6FALEFH0030 | FAN UNIT | 1 | |
| | 2 | REE1730 | 10P FFC (MAIN-CD INTERFACE) | 1 | |
| | 3 | REE1761 | 30P FFC (MAIN-PANEL) | 1 | |
| | 4 | REX1589 | 5P CABLE WIRE (USB-MAIN) | 1 | |
| | 5 | REX1562-1 | 13P CABLE WIRE (SMPS-MAIN) | 1 | |
| | 6 | REX1587 | 5P CABLE WIRE (MUSIC PORT-PANEL) | 1 | |
| | 7 | REX1594 | 2P CABLE WIRE (MEMORY LED-PANEL) | 1 | |
| | 8 | RMK0841 | INNER CHASSIS | 1 | |
| | 9 | RMKX1031A-1 | BOTTOM CHASSIS | 1 | |
| | 10 | RGW0428-S1 | VOLUME KNOB | 1 | |
| | 11 | RGW0435-K | SKIP KNOB | 1 | |
| | 12 | RMA2442 | CHASSIS SUPPORT | 2 | |
| | 13 | RMQ2134 | MECHA HOLDER | 2 | |
| | 14 | RMZX1022 | HEATSINK SPACER | 4 | |
| | 15 | RSC1230 | TUNER SHIELD | 1 | |
| ⚠ | 16 | RGR0443E-A1 | REAR PANEL | 1 | PN |
| ⚠ | 16 | RGR0443F-A1 | REAR PANEL | 1 | PH |
| ⚠ | 17 | RKM0713-K1 | TOP CABINET | 1 | |
| | 18 | RHD26043-1 | SCREW | 4 | |

| Safety | Ref. No. | Part No. | Part Name & Description | Qty | Remarks |
|---|---|---|---|---|---|
| | 19 | RHD26046-L | SCREW | 12 | |
| | 20 | RHD30007-K2J | SCREW | 4 | |
| | 21 | RHD30111-31 | SCREW | 8 | |
| | 22 | RHD30119-S | SCREW | 14 | PN |
| | 22 | RHD30119-S | SCREW | 15 | PH |
| | 23 | RHDX031008 | SCREW | 2 | |
| | 24 | RMNV0079-1 | FL HOLDER | 1 | |
| | 25 | RMNX0298 | PCB SPACER | 1 | |
| | 26 | RKAX0042-K | LEG CUSHION | 4 | |
| | 27 | RGK2479-S | LEFT FUNCTION ORNAMENT | 1 | |
| | 28 | RGK2480-S | RIGHT FUNCTION ORNAMENT | 1 | |
| | 29 | RGK2449-S | RING ORNAMENT TOP/BOTTOM | 2 | |
| | 30 | RGU2851-S | LEFT PLAYLIST BUTTON | 1 | |
| | 31 | RGU2852-S | RIGHT PLAYLIST BUTTON | 1 | |
| | 32 | RGU2882A-S | LEFT FUNCTION BUTTON | 1 | |
| | 33 | RGU2883-S | RIGHT FUNCTION BUTTON | 1 | |
| | 34 | RGL0785-Q | USB REC LIGHT PCS | 1 | |
| | 35 | RKW1027-Q | CENTER ORNAMENT | 1 | |
| | 36 | RFKGAKX76LK | FRONT PANEL ASS'Y | 1 | |
| | 37 | RMGX0033A-K | CD LID CUSHION | 1 | |
| | 38 | RGK2438-K | CD LID | 1 | |
| | 40 | RMB0930 | CD LID SPRING | 1 | |
| | 41 | RGQ0741-W | VOULME LIGHT DIFFUSER | 1 | |

| Safety | Ref. No. | Part No. | Part Name & Description | Qty | Remarks |
|---|---|---|---|---|---|
| | 42 | RGQ0744-W | VOLUME LIGHT SHEET | 1 | |
| | 43 | RKW1025-Q | FL WINDOW | 1 | |
| | 44 | RGU2848-K | POWER BUTTON | 1 | |
| ⚠ | 45 | REXX1123-K | 1P RED WIRE (VOLTAGE SELEC-TOR-SMPS) | 1 | PH |
| ⚠ | 46 | REXX1122-K | 1P BLACK WIRE (VOLTAGE SELEC-TOR-SMPS) | 1 | PH |
| | 47 | RHDX30005-J | SCREW | 3 | |
| | 48 | REXX1159-1 | 2P GRD WIRE (MUSIC PORT - INNER CHASSIS) | 1 | |
| | 49 | RGC0050-W1 | VOLUME LIGHT REFLECTOR | 1 | |
| | 50 | RMZ1362 | IC INSULATION SHEET | 1 | |
| | 51 | RMZ1363 | IN INSULATION TUBE | 1 | |
| | | | | | |
| | | | TRAVERSE DECK | | |
| | | | | | |
| ⚠ | 301 | RAE1036Z-V | TRAVERSE ASS'Y | 1 | |
| | 312 | XTN2+6GFJ | SCREW | 3 | |
| | | | | | |
| | | | PACKING MATERI-ALS | | |
| | | | | | |
| | P1 | RPG0E03 | PACKING CASE | 1 | PN |
| | P1 | RPG0E04 | PACKING CASE | 1 | PH |
| | P2 | RPN2516 | POLYFOAM | 1 | |
| | P3 | RPFX0198-1 | MIRAMAT | 1 | |
| | | | | | |
| | | | ACCESSORIES | | |
| | | | | | |
| | A1 | N2QAYB000850 | REMOTE CONTROL | 1 | |
| | A1-1 | RKK-PM500EBK | R/C BATTERY COVER | 1 | |
| ⚠ | A2 | K2CB2CB00022 | AC CORD | 1 | PN |
| ⚠ | A2 | K2CQ2YY00119 | AC CORD | 1 | PH |
| ⚠ | A3 | RQT9798-M | O/I BOOK (Sp/En) | 1 | |
| | A4 | RSAX0002 | FM INDOOR ANTENNA | 1 | |
| | A5 | N1DYYYY00011 | AM LOOP ANTENNA | 1 | |
| | A6 | K2DAYYY00002 | AC PLUG ADAPTOR | 1 | PH |

## 17.2. Electrical Replacement Part List

**Important Safety Notice**

*Components identified by ⚠ mark have special characteristics important for safety.*
*When replacing any of these components, use only manufacturer's specified parts.*

**RTL (Retention Time Limited)**

**Note:** The marking (RTL) indicates that the Retention Time is Limited for this item.
After the discontinuation of this assembly in production, the item will continue to be available for a specific period of time. The retention period of availability is dependant on the type of assembly, and in accordance with the laws governing part and product retention. After the end of this period, the assembly will no longer be available.

**Note:**

- When replacing any of these components, be sure to use only manufacturer's specified parts shown in the replacement part list.
- The parenthesized indications on the Remarks column specify the destination & product color (Refer to the cover page for the information).
- Parts without these indications shall be used for all areas.
- This product uses a laser diode. Refer to "Precaution of Laser Diode".
- Capacitor value are in microfarads (uF) unless specified otherwise, P=Pico-farads (pF), F=Farads.
- Resistance values are in ohms, unless specified otherwise, 1K=1000 (OHM).
- All parts mentioned are supplied by PAVCJM unless indicated likewise.
- Parts mentioned [SPG] in the Remarks column are supplied by JAPAN.

**E.S.D. standards for Electrostatically Sensitive Devices, refer to "PREVENTION OF ELECTROSTATIC DISCHARGE (ESD) TO ELECTROSTATIC SENSITIVE (ES) DEVICES" section.**

| Safety | Ref. No. | Part No. | Part Name & Description | Qty | Remarks |
|---|---|---|---|---|---|
| | | | | | |
| | | | PRINTED CIRCUIT BOARDS | | |
| | | | | | |
| | PCB1 | REP4882D | MAIN P.C.B. | 1 | (RTL) PH |
| | PCB2 | REP4882C | MAIN P.C.B. | 1 | (RTL) PN |
| | PCB3 | REP4884AA | PANEL P.C.B. | 1 | (RTL) |
| | PCB4 | REP4884AB | USB P.C.B. | 1 | (RTL) |
| | PCB5 | REP4884AA | MUSIC PORT P.C.B. | 1 | (RTL) |
| | PCB6 | REP4884AA | MEMORY LED P.C.B. | 1 | (RTL) |
| | PCB7 | REP4884AE | REMOTE SENSOR P.C.B. | 1 | (RTL) |
| ⚠ | PCB8 | REP4965F | SMPS P.C.B. | 1 | (RTL) PH |
| | PCB9 | REP4965F | VOLTAGE SELECTOR P.C.B. | 1 | (RTL) PH |
| ⚠ | PCB10 | REP4965D | SMPS P.C.B. | 1 | (RTL) PN |
| | PCB11 | REP4945A | CD INTERFACE P.C.B. | 1 | (RTL) |
| | PCB12 | REP4676A | CD LOADING P.C.B. | 1 | (RTL) |
| | | | | | |
| | | | INTEGRATED CIRCUITS | | |
| | | | | | |
| | IC2000 | VUEALLPT056 | IC | 1 | (E.S.D), [SPG] |
| | IC2002 | C0JBAR000367 | IC | 1 | (E.S.D) |
| | IC2004 | C0DBZYY00592 | IC | 1 | (E.S.D) |

| Safety | Ref. No. | Part No. | Part Name & Description | Qty | Remarks |
|---|---|---|---|---|---|
| | IC2006 | RFKWMAKX56LM | IC | 1 | (E.S.D), JIGS & ADJ |
| | IC2007 | C3EBEY000037 | IC | 1 | (E.S.D) |
| | IC2008 | C1AB00004003 | IC | 1 | (E.S.D) |
| | IC2009 | C0DBGYY03056 | IC | 1 | (E.S.D) |
| | IC2010 | C0ABBB000067 | IC | 1 | (E.S.D) |
| | IC2011 | C0DBAYY01594 | IC | 1 | (E.S.D) |
| | IC2012 | C0DBAYY01594 | IC | 1 | (E.S.D) |
| | IC2501 | C1AB00003986 | IC | 1 | (E.S.D) |
| | IC2502 | C1AB00003986 | IC | 1 | (E.S.D) |
| | IC2503 | C1AB00003986 | IC | 1 | (E.S.D) |
| | IC5701 | C1ZBZ0004646 | IC | 1 | (E.S.D) |
| | IC5790 | MIP2F20MSSCF | IC | 1 | (E.S.D) |
| | IC5801 | C0DAZYY00039 | IC | 1 | (E.S.D) |
| | IC5899 | C0DAZYY00039 | IC | 1 | (E.S.D) |
| | IC6000 | C0HBB0000057 | IC | 1 | (E.S.D) |
| | IC8001 | MN6627992AB | IC | 1 | (E.S.D) |
| | IC8051 | C3ABMY000027 | IC | 1 | (E.S.D) |
| | IC8251 | C0GBY0000117 | IC | 1 | (E.S.D) |
| | IC8401 | C3FBMY000309 | IC | 1 | (E.S.D) |
| | IC8501 | C3FBXY000042 | IC | 1 | (E.S.D) |
| | | | | | |
| | | | TRANSISTORS | | |
| | | | | | |
| | Q2001 | B1GBCFLL0037 | TRANSISTOR | 1 | (E.S.D) |
| | Q2002 | B1AAJC000019 | TRANSISTOR | 1 | (E.S.D) |
| | Q2003 | B1ADCE000012 | TRANSISTOR | 1 | (E.S.D) |
| | Q2004 | B1GBCFJJ0051 | TRANSISTOR | 1 | (E.S.D) |
| | Q2006 | B1ABCF000231 | TRANSISTOR | 1 | (E.S.D) |
| | Q2008 | B1ABCF000231 | TRANSISTOR | 1 | (E.S.D) |
| | Q2010 | B1ABCF000231 | TRANSISTOR | 1 | (E.S.D) |
| | Q2012 | B1GBCFJJ0041 | TRANSISTOR | 1 | (E.S.D) |
| | Q2022 | B1BACG000023 | TRANSISTOR | 1 | (E.S.D) |
| | Q2023 | B1GBCFJJ0041 | TRANSISTOR | 1 | (E.S.D) |

| Safety | Ref. No. | Part No. | Part Name & Description | Qty | Remarks |
|---|---|---|---|---|---|
| | Q2024 | B1GBCFJJ0041 | TRANSISTOR | 1 | (E.S.D) |
| | Q2631 | B1ABCF000231 | TRANSISTOR | 1 | (E.S.D) |
| | Q2632 | B1ABCF000231 | TRANSISTOR | 1 | (E.S.D) |
| | Q2633 | B1ABCF000231 | TRANSISTOR | 1 | (E.S.D) |
| | Q2634 | B1ADCE000012 | TRANSISTOR | 1 | (E.S.D) |
| | Q3200 | B1ABCF000176 | TRANSISTOR | 1 | (E.S.D) |
| | Q3202 | B1ABCF000176 | TRANSISTOR | 1 | (E.S.D) |
| | Q3301 | B1GBCFJJ0041 | TRANSISTOR | 1 | (E.S.D) |
| | Q5701 | B1DEHU000002 | TRANSISTOR | 1 | (E.S.D) |
| | Q5711 | B1ABCF000176 | TRANSISTOR | 1 | (E.S.D) |
| | Q5720 | B1BABG000007 | TRANSISTOR | 1 | (E.S.D) |
| | Q5721 | B1ADCF000001 | TRANSISTOR | 1 | (E.S.D) |
| | Q5803 | B1BABG000007 | TRANSISTOR | 1 | (E.S.D) |
| | Q5898 | B1ABCF000176 | TRANSISTOR | 1 | (E.S.D) |
| | Q6000 | B1BABG000007 | TRANSISTOR | 1 | (E.S.D) |
| | Q6001 | B1ABMG000008 | TRANSISTOR | 1 | (E.S.D) |
| | Q8201 | B1ADCF000001 | TRANSISTOR | 1 | (E.S.D) |
| | QR102 | B1ADCE000012 | TRANSISTOR | 1 | (E.S.D) |
| | QR2001 | B1GBCFJJ0051 | TRANSISTOR | 1 | (E.S.D) |
| | QR2002 | B1GBCFJJ0051 | TRANSISTOR | 1 | (E.S.D) |
| | QR2003 | B1GBCFJJ0051 | TRANSISTOR | 1 | (E.S.D) |
| | QR3000 | B1GBCFGN0016 | TRANSISTOR | 1 | (E.S.D) |
| | QR3102 | B1GBCFGN0016 | TRANSISTOR | 1 | (E.S.D) |
| | QR3103 | B1GBCFGN0016 | TRANSISTOR | 1 | (E.S.D) |
| | QR3104 | B1GBCFGN0016 | TRANSISTOR | 1 | (E.S.D) |
| | QR5810 | B1GBCFLL0037 | TRANSISTOR | 1 | (E.S.D) |
| | QR6000 | B1GBCFJJ0051 | TRANSISTOR | 1 | (E.S.D) |
| | QR6003 | B1GBCFJJ0051 | TRANSISTOR | 1 | (E.S.D) |
| | QR6004 | B1GBCFJJ0051 | TRANSISTOR | 1 | (E.S.D) |
| | QR6005 | B1GBCFJJ0051 | TRANSISTOR | 1 | (E.S.D) |
| | QR6008 | B1GBCFJJ0051 | TRANSISTOR | 1 | (E.S.D) |
| | | | | | |
| | | | DIODES | | |
| | | | | | |
| | D2001 | DA2J10100L | DIODE | 1 | (E.S.D) |
| | D2002 | DA2J10100L | DIODE | 1 | (E.S.D) |
| | D2003 | B0ADDJ000032 | DIODE | 1 | (E.S.D) |
| | D2004 | DA2J10100L | DIODE | 1 | (E.S.D) |
| | D2007 | DZ2J130M0L | DIODE | 1 | (E.S.D) |
| | D2017 | DZ2J130M0L | DIODE | 1 | (E.S.D) |
| | D3200 | B0ADCC000002 | DIODE | 1 | (E.S.D) |
| | D3202 | B0ADCC000002 | DIODE | 1 | (E.S.D) |
| | D3301 | B0ADDJ000032 | DIODE | 1 | (E.S.D) |
| | D3303 | B0JCPG000030 | DIODE | 1 | (E.S.D) |
| | D3351 | B0ECKM000008 | DIODE | 1 | (E.S.D) |
| | D5701 | B0FBBV000006 | DIODE | 1 | (E.S.D) |
| | D5702 | B0ZBZ0000205 | DIODE | 1 | (E.S.D) |
| | D5703 | B0JCPD000025 | DIODE | 1 | (E.S.D) |
| | D5721 | DZ2J180M0L | DIODE | 1 | (E.S.D) |
| | D5722 | DZ2J200M0L | DIODE | 1 | (E.S.D) |
| | D5723 | DA2J10100L | DIODE | 1 | (E.S.D) |
| | D5724 | DA2J10100L | DIODE | 1 | (E.S.D) |
| | D5725 | DZ2J062M0L | DIODE | 1 | (E.S.D) |
| | D5726 | B0EAMM000057 | DIODE | 1 | (E.S.D) |
| | D5727 | DA2J10100L | DIODE | 1 | (E.S.D) |
| | D5728 | DA2J10100L | DIODE | 1 | (E.S.D) |
| | D5729 | B0EAMM000057 | DIODE | 1 | (E.S.D) |
| | D5730 | B0ECET000006 | DIODE | 1 | (E.S.D) |
| | D5731 | B0EAMM000057 | DIODE | 1 | (E.S.D) |
| | D5732 | DZ2J360M0L | DIODE | 1 | (E.S.D) |
| | D5793 | B0HAMP000094 | DIODE | 1 | (E.S.D) |
| | D5795 | DZ2J091M0L | DIODE | 1 | (E.S.D) |
| | D5798 | B0EAMM000057 | DIODE | 1 | (E.S.D) |
| | D5801 | B0ABSM000008 | DIODE | 1 | (E.S.D) |
| | D5802 | B0ABSM000008 | DIODE | 1 | (E.S.D) |
| | D5896 | B0EAMM000057 | DIODE | 1 | (E.S.D) |
| | D6006 | B0BC033A0282 | DIODE | 1 | (E.S.D) |
| | D6007 | B0EAMM000057 | DIODE | 1 | (E.S.D) |
| | D6008 | B0JAME000114 | DIODE | 1 | (E.S.D) |
| | D6009 | DZ2J24000L | DIODE | 1 | (E.S.D) |
| | D6010 | B0EAMM000057 | DIODE | 1 | (E.S.D) |
| | D6012 | B0BC2R4A0006 | DIODE | 1 | (E.S.D) |
| | D6101 | B3AEA0000172 | DIODE | 1 | (E.S.D) |

| Safety | Ref. No. | Part No. | Part Name & Description | Qty | Remarks |
|---|---|---|---|---|---|
| | D6102 | B3AAA0001129 | DIODE | 1 | (E.S.D) |
| | D6103 | B3ABA0000905 | DIODE | 1 | (E.S.D) |
| | D6104 | B3ABA0000905 | DIODE | 1 | (E.S.D) |
| | D6105 | B3AAA0001129 | DIODE | 1 | (E.S.D) |
| | D6106 | B3AEA0000172 | DIODE | 1 | (E.S.D) |
| | D6107 | B0EAMM000057 | DIODE | 1 | (E.S.D) |
| | D6400 | B3AAA0000487 | DIODE | 1 | (E.S.D) |
| | D6700 | B3AAA0001129 | DIODE | 1 | (E.S.D) |
| | D8250 | DZ2J056M0L | DIODE | 1 | (E.S.D) |
| | D8251 | DA2J10100L | DIODE | 1 | (E.S.D) |
| | DZ2000 | B0JCPG000030 | DIODE | 1 | (E.S.D) |
| ⚠ | DZ5701 | D4EAY511A127 | VARISTOR | 1 | (E.S.D) |
| | | | | | |
| | | | VARIABLE RESIS-TORS | | |
| | | | | | |
| | VR6100 | EVEKE2F3524B | VOLUME JOG | 1 | |
| | VR6200 | K9AA012Y0012 | CONTROL JOG | 1 | |
| | | | | | |
| | | | VARISTOR | | |
| | | | | | |
| | VA2002 | EZAEG2A50AX | VARISTOR | 1 | |
| | | | | | |
| | | | SWITCHES | | |
| | | | | | |
| ⚠ | S5701 | K0ABCA000007 | AC VOLTAGE SELECTOR | 1 | PH |
| | S6000 | EVQ21405RJ | SW PLAYLIST 2 | 1 | |
| | S6001 | EVQ21405RJ | SW PLAYLIST 3 | 1 | |
| | S6002 | EVQ21405RJ | SW PLAYLIST 4 | 1 | |
| | S6003 | EVQ21405RJ | SW PLAYLIST 1 | 1 | |
| | S6004 | EVQ21405RJ | SW PLAYLIST 5 | 1 | |
| | S6006 | EVQ21405RJ | SW PLAYLIST 6 | 1 | |
| | S6012 | EVQ21405RJ | SW STOP | 1 | |
| | S6100 | EVQ21405RJ | SW CD | 1 | |
| | S6101 | EVQ21405RJ | SW RADIO/EXT-IN | 1 | |
| | S6103 | EVQ21405RJ | SW ALBUM/TRACK | 1 | |
| | S6104 | EVQ21405RJ | SW MEMORY/USB | 1 | |
| | S6105 | EVQ21405RJ | SW PLAY/PAUSE | 1 | |
| | S6107 | EVQ21405RJ | SW CD OPEN | 1 | |
| | S6200 | EVQ21405RJ | SW LATIN/PRESET EQ | 1 | |
| | S6201 | EVQ21405RJ | SW REWIND | 1 | |
| | S6202 | EVQ21405RJ | SW MANUAL EQ | 1 | |
| | S6203 | EVQ21405RJ | SW POWER | 1 | |
| | S6204 | EVQ21405RJ | SW MEMORY REC | 1 | |
| | S6206 | EVQ21405RJ | SW D.BASS | 1 | |
| | S6207 | EVQ21405RJ | SW USB REC | 1 | |
| | S6208 | EVQ21405RJ | SW FORWARD | 1 | |
| | S7201 | K0L1BA000158 | SW RESET | 1 | |
| | | | | | |
| | | | CONNECTORS | | |
| | | | | | |
| | CN2001 | K1KA05AA0193 | 5P CONNECTOR | 1 | |
| | CN2003 | K1MY06AA0124 | 6P CONNECTOR | 1 | |
| | CN2004 | K1MY30AA0124 | 30P CONNECTOR | 1 | |
| | CN2007 | K1KA02AA0186 | 2P CONNECTOR | 1 | |
| | CN2008 | K1YZ13000002 | 13P CONNECTOR | 1 | |
| | CN3105 | K1KA04BA0061 | 4P CONNECTOR | 1 | |
| | CN5802 | K1KA13AA0181 | 13P CONNECTOR | 1 | |
| | CN6001 | K1MY30AA0124 | 30P CONNECTOR | 1 | |
| | CN6002 | K1KA04A00553 | 4P CONNECTOR | 1 | |
| | CN6003 | K1YZ02000015 | 2P WIRE HOLDER | 1 | |
| | CN6400 | K1FY104A0034 | USB CONNECTOR | 1 | |
| | CN6500 | K1KB04B00043 | 4P CONNECTOR | 1 | |
| | CN7001 | K1MY05BA0539 | 5P CONNECTOR | 1 | |
| | CN7002 | K1MN10B00016 | 10P CONNECTOR | 1 | |
| | FP8201 | K1MN24A00062 | 24P CONNECTOR | 1 | |
| | FP8251 | K1MN10AA0076 | 10P CONNECTOR | 1 | |
| | FP9003 | K1KA05AA0051 | 5P CONNECTOR | 1 | |
| | | | | | |
| | | | COILS AND INDUC-TORS | | |
| | | | | | |

| Safety | Ref. No. | Part No. | Part Name & Description | Qty | Remarks |
|---|---|---|---|---|---|
| | L2000 | G2A380Y00002 | ANTENNA COIL | 1 | |
| | L2002 | G1CR18JA0020 | INDUCTOR | 1 | |
| | L2006 | G1C1R0MA0204 | INDUCTOR | 1 | |
| | L2007 | G1C330MA0291 | INDUCTOR | 1 | |
| | L2500 | G0C100M00009 | INDUCTOR | 1 | |
| | L2501 | G0C100M00009 | INDUCTOR | 1 | |
| | L2502 | G0C100M00009 | INDUCTOR | 1 | |
| | L2503 | G0C100M00009 | INDUCTOR | 1 | |
| | L2506 | G0C100M00009 | INDUCTOR | 1 | |
| | L2507 | G0C100M00009 | INDUCTOR | 1 | |
| | L3300 | G1C470MA0291 | INDUCTOR | 1 | |
| ⚠ | L5702 | G0B932H00003 | LINE FILTER | 1 | |
| | L5704 | J0JAC0000018 | INDUCTOR | 1 | |
| | L5801 | G0C220KA0174 | INDUCTOR | 1 | |
| | L6000 | J0JBC0000019 | INDUCTOR | 1 | |
| | L6300 | J0JBC0000019 | INDUCTOR | 1 | |
| | L6301 | J0JBC0000019 | INDUCTOR | 1 | |
| | L6302 | J0JBC0000019 | INDUCTOR | 1 | |
| | LB2000 | J0JBC0000134 | INDUCTOR | 1 | |
| | LB2006 | J0JBC0000134 | INDUCTOR | 1 | |
| | LB3201 | J0JBC0000134 | INDUCTOR | 1 | |
| | LB3401 | J0JYC0000118 | INDUCTOR | 1 | |
| | LB8002 | J0JCC0000407 | INDUCTOR | 1 | |
| | LB8003 | J0JHC0000045 | INDUCTOR | 1 | |
| | LB8004 | J0JHC0000045 | INDUCTOR | 1 | |
| | LB8052 | J0JHC0000045 | INDUCTOR | 1 | |
| | LB8201 | J0JHC0000045 | INDUCTOR | 1 | |
| | LB8202 | G1C100KA0101 | INDUCTOR | 1 | |
| | LB8203 | J0JBC0000134 | INDUCTOR | 1 | |
| | LB8204 | J0JBC0000134 | INDUCTOR | 1 | |
| | LB8251 | J0JHC0000045 | INDUCTOR | 1 | |
| | LB8252 | J0JHC0000045 | INDUCTOR | 1 | |
| | LB8401 | J0JHC0000045 | INDUCTOR | 1 | |
| | LB8402 | J0JHC0000045 | INDUCTOR | 1 | |
| | LB8501 | J0JHC0000045 | INDUCTOR | 1 | |
| | R8012 | J0JHC0000045 | INDUCTOR | 1 | |
| | R8016 | J0JHC0000045 | INDUCTOR | 1 | |
| | R8017 | J0JHC0000045 | INDUCTOR | 1 | |
| | | | | | |
| | | | TRANSFORMERS | | |
| | | | | | |
| ⚠ | T5701 | G4DYZ0000070 | TRANSFORMER | 1 | |
| ⚠ | T5751 | G4DYZ0000064 | TRANSFORMER | 1 | |
| ⚠ | T6000 | G4DYA0000214 | TRANSFORMER | 1 | |
| | | | | | |
| | | | FUSES | | |
| | | | | | |
| ⚠ | F1 | K5D802APA008 | FUSE | 1 | PN |
| ⚠ | F1 | K5D802BK0004 | FUSE | 1 | PH |
| | | | | | |
| | | | PHOTO COUPLERS | | |
| | | | | | |
| ⚠ | PC5701 | B3PBA0000579 | PHOTO COUPLER | 1 | |
| ⚠ | PC5702 | B3PBA0000579 | PHOTO COUPLER | 1 | |
| ⚠ | PC5720 | B3PBA0000579 | PHOTO COUPLER | 1 | |
| ⚠ | PC5799 | B3PBA0000579 | PHOTO COUPLER | 1 | |
| | | | | | |
| | | | FILTERS | | |
| | | | | | |
| | VA5700 | J0LY00000168 | FILTER | 1 | PH |
| | VA5701 | J0LY00000168 | FILTER | 1 | PH |
| | | | | | |
| | | | TERMINAL | | |
| | | | | | |
| | ZJ2000 | K9ZZ00001279 | TERMINAL | 1 | |
| | | | | | |
| | | | OSCILLATORS | | |
| | | | | | |
| | X2001 | H0A327200181 | OSCILLATOR | 1 | |
| | X2002 | H2B800400007 | OSCILLATOR | 1 | |
| | X8101 | H0J338300002 | OSCILLATOR | 1 | |
| | | | | | |

| Safety | Ref. No. | Part No. | Part Name & Description | Qty | Remarks |
|---|---|---|---|---|---|
| | | | REMOTE SENSOR | | |
| | | | | | |
| | IR6500 | B3RAB0000110 | REMOTE SENSOR | 1 | |
| | | | | | |
| | | | LCD DISPLAY | | |
| | | | | | |
| | FL6000 | A2BB00000184 | LCD DISPLAY | 1 | |
| | | | | | |
| | | | FUSE HOLDERS | | |
| | | | | | |
| | ZA5701 | K3GE1ZZ00001 | FUSE HOLDER | 1 | |
| | ZA5702 | K3GE1ZZ00001 | FUSE HOLDER | 1 | |
| | | | | | |
| | | | THERMISTOR | | |
| | | | | | |
| | TH5861 | D4CCY1040001 | THERMISTOR | 1 | |
| | | | | | |
| | | | JACKS | | |
| | | | | | |
| | JK2000 | K4ZZ02000103 | JK FM ANT | 1 | |
| | JK2001 | K2HA204B0153 | JK AUX IN | 1 | |
| | JK2002 | K4AC02B00042 | JK AM ANT | 1 | |
| | JK2501 | K4AZ10A00003 | JK SPEAKER | 1 | |
| | JK6301 | K2HC103A0031 | JK MUSIC PORT | 1 | |
| ⚠ | P5701 | K2AA2B000011 | AC INLET | 1 | PH |
| ⚠ | P5701 | K2AB2B000007 | AC INLET | 1 | PN |
| | | | | | |
| | | | CHIP JUMPERS | | |
| | | | | | |
| | K4 | D0GBR00J0004 | 0 1/10W | 1 | PN |
| | K6 | D0GBR00J0004 | 0 1/10W | 1 | PH |
| | K2501 | D0YRR0000001 | 0 31.5W | 1 | |
| | K2502 | D0YRR0000001 | 0 31.5W | 1 | |
| | K8202 | D0GBR00J0004 | 0 1/10W | 1 | |
| | K8203 | D0GBR00J0004 | 0 1/10W | 1 | |
| | K8204 | D0GBR00J0004 | 0 1/10W | 1 | |
| | K8205 | D0GBR00J0004 | 0 1/10W | 1 | |
| | K8206 | D0GBR00J0004 | 0 1/10W | 1 | |
| | K8207 | D0GDR00JA017 | 0 1/8W | 1 | |
| | K8208 | D0GBR00J0004 | 0 1/10W | 1 | |
| | K8210 | D0GBR00J0004 | 0 1/10W | 1 | |
| | L2005 | D0GBR00J0004 | 0 1/10W | 1 | |
| | LB2010 | D0GBR00J0004 | 0 1/10W | 1 | |
| | LB2011 | D0GBR00J0004 | 0 1/10W | 1 | |
| | LB2012 | D0GBR00J0004 | 0 1/10W | 1 | |
| | W300 | D0GBR00JA008 | 0 1/10W | 1 | |
| | W1001 | D0GDR00JA017 | 0 1/8W | 1 | |
| | W1002 | D0GBR00JA008 | 0 1/10W | 1 | |
| | W1003 | D0GDR00JA017 | 0 1/8W | 1 | |
| | W1004 | D0GBR00JA008 | 0 1/10W | 1 | |
| | W1005 | D0GFR00JA017 | 0 1/4W | 1 | |
| | W1006 | D0GFR00JA017 | 0 1/4W | 1 | |
| | W1007 | D0GFR00JA017 | 0 1/4W | 1 | |
| | W1008 | D0GFR00JA017 | 0 1/4W | 1 | |
| | W1009 | D0GDR00JA017 | 0 1/8W | 1 | |
| | W1010 | D0GFR00JA017 | 0 1/4W | 1 | |
| | W1011 | D0GFR00JA017 | 0 1/4W | 1 | |
| | W1012 | D0GFR00JA017 | 0 1/4W | 1 | |
| | W1013 | D0GFR00JA017 | 0 1/4W | 1 | |
| | W1014 | D0GDR00JA017 | 0 1/8W | 1 | |
| | W1015 | D0GFR00JA017 | 0 1/4W | 1 | |
| | W1017 | D0GFR00JA017 | 0 1/4W | 1 | |
| | W1018 | D0GFR00JA017 | 0 1/4W | 1 | |
| | W1020 | D0GBR00JA008 | 0 1/10W | 1 | |
| | W1022 | D0GFR00JA017 | 0 1/4W | 1 | |
| | W1023 | D0GFR00JA017 | 0 1/4W | 1 | |
| | W1024 | D0GDR00JA017 | 0 1/8W | 1 | |
| | W1025 | D0GFR00JA017 | 0 1/4W | 1 | |
| | W1026 | D0GFR00JA017 | 0 1/4W | 1 | |
| | W1027 | D0GFR00JA017 | 0 1/4W | 1 | |
| | W1030 | D0GFR00JA017 | 0 1/4W | 1 | |
| | W1033 | D0GFR00JA017 | 0 1/4W | 1 | |
| | W1034 | D0GFR00JA017 | 0 1/4W | 1 | |

| Safety | Ref. No. | Part No. | Part Name & Description | Qty | Remarks |
|---|---|---|---|---|---|
| | W1035 | D0GDR00JA017 | 0 1/8W | 1 | |
| | W1039 | D0GDR00JA017 | 0 1/8W | 1 | |
| | W1040 | D0GBR00JA008 | 0 1/10W | 1 | |
| | W1041 | D0GFR00JA017 | 0 1/4W | 1 | |
| | W1042 | D0GFR00JA017 | 0 1/4W | 1 | |
| | W1043 | D0GFR00JA017 | 0 1/4W | 1 | |
| | W1044 | D0GFR00JA017 | 0 1/4W | 1 | |
| | W1045 | D0GFR00JA017 | 0 1/4W | 1 | |
| | W1046 | D0GFR00JA017 | 0 1/4W | 1 | |
| | W1047 | D0GFR00JA017 | 0 1/4W | 1 | |
| | W1048 | D0GFR00JA017 | 0 1/4W | 1 | |
| | W1049 | D0GBR00JA008 | 0 1/10W | 1 | |
| | W1050 | D0GFR00JA017 | 0 1/4W | 1 | |
| | W1051 | D0GDR00JA017 | 0 1/8W | 1 | |
| | W1058 | D0GDR00JA017 | 0 1/8W | 1 | |
| | W1059 | D0GFR00JA017 | 0 1/4W | 1 | |
| | W1060 | D0GFR00JA017 | 0 1/4W | 1 | |
| | W1061 | D0GFR00JA017 | 0 1/4W | 1 | |
| | W1062 | D0GFR00JA017 | 0 1/4W | 1 | |
| | W1063 | D0GFR00JA017 | 0 1/4W | 1 | |
| | W1064 | D0GBR00JA008 | 0 1/10W | 1 | |
| | W1065 | D0GFR00JA017 | 0 1/4W | 1 | |
| | W1070 | D0GFR00JA017 | 0 1/4W | 1 | |
| | W1071 | D0GFR00JA017 | 0 1/4W | 1 | |
| | W1072 | D0GDR00JA017 | 0 1/8W | 1 | |
| | W1073 | D0GFR00JA017 | 0 1/4W | 1 | |
| | W1074 | D0GFR00JA017 | 0 1/4W | 1 | |
| | W1075 | D0GDR00JA017 | 0 1/8W | 1 | |
| | W1076 | D0GFR00JA017 | 0 1/4W | 1 | |
| | W1077 | D0GFR00JA017 | 0 1/4W | 1 | |
| | W1078 | D0GFR00JA017 | 0 1/4W | 1 | |
| | W1079 | D0GFR00JA017 | 0 1/4W | 1 | |
| | W1080 | D0GFR00JA017 | 0 1/4W | 1 | |
| | W1081 | D0GFR00JA017 | 0 1/4W | 1 | |
| | W1082 | D0GFR00JA017 | 0 1/4W | 1 | |
| | W1083 | D0GDR00JA017 | 0 1/8W | 1 | |
| | W1084 | D0GBR00JA008 | 0 1/10W | 1 | |
| | W1126 | D0GFR00JA017 | 0 1/4W | 1 | |
| | W1129 | D0GBR00JA008 | 0 1/10W | 1 | |
| | W1131 | D0GDR00JA017 | 0 1/8W | 1 | |
| | W1133 | D0GFR00JA017 | 0 1/4W | 1 | |
| | W1134 | D0GFR00JA017 | 0 1/4W | 1 | |
| | W1135 | D0GFR00JA017 | 0 1/4W | 1 | |
| | W1136 | D0GDR00JA017 | 0 1/8W | 1 | |
| | W1137 | D0GFR00JA017 | 0 1/4W | 1 | |
| | W1138 | D0GDR00JA017 | 0 1/8W | 1 | |
| | W1139 | D0GFR00JA017 | 0 1/4W | 1 | |
| | W5904 | D0GBR00JA008 | 0 1/10W | 1 | |
| | W5926 | D0GFR00JA017 | 0 1/4W | 1 | |
| | W5927 | D0GDR00JA017 | 0 1/8W | 1 | |
| | W5930 | D0GDR00JA017 | 0 1/8W | 1 | |
| | | | | | |
| | | | RESISTORS | | |
| | | | | | |
| | R2000 | D0GB103JA008 | 10K 1/10W | 1 | |
| | R2001 | D0GB103JA008 | 10K 1/10W | 1 | |
| | R2002 | D0GB103JA008 | 10K 1/10W | 1 | |
| | R2003 | D0GB103JA008 | 10K 1/10W | 1 | |
| | R2011 | D0GBR00JA008 | 0 1/10W | 1 | |
| | R2012 | D0GA472JA023 | 4.7K 1/16W | 1 | |
| | R2013 | D0GBR00JA008 | 0 1/10W | 1 | |
| | R2015 | D0GA472JA023 | 4.7K 1/16W | 1 | |
| | R2017 | D0GBR00JA008 | 0 1/10W | 1 | |
| | R2018 | D0GA221JA023 | 220 1/16W | 1 | |
| | R2019 | D0GA221JA023 | 220 1/16W | 1 | |
| | R2020 | D0GA102JA023 | 1K 1/16W | 1 | |
| | R2023 | D0GB222JA008 | 2.2K 1/10W | 1 | |
| | R2024 | D0GBR00J0004 | 0 1/10W | 1 | |
| | R2025 | D0GB561JA008 | 560 1/10W | 1 | |
| | R2026 | D0GB222JA008 | 2.2K 1/10W | 1 | |
| | R2027 | D0GBR00J0004 | 0 1/10W | 1 | |
| | R2034 | D0GBR00JA008 | 0 1/10W | 1 | |
| | R2035 | D0GBR00JA008 | 0 1/10W | 1 | |

| Safety | Ref. No. | Part No. | Part Name & Description | Qty | Remarks |
|---|---|---|---|---|---|
| | R2036 | D0GBR00JA008 | 0 1/10W | 1 | |
| | R2037 | D0GBR00JA008 | 0 1/10W | 1 | |
| | R2046 | D0GB103JA008 | 10K 1/10W | 1 | |
| | R2047 | D0GB102JA008 | 1K 1/10W | 1 | |
| | R2048 | D0GB101JA008 | 100 1/10W | 1 | |
| | R2049 | D0GBR00JA008 | 0 1/10W | 1 | |
| | R2053 | D0GB104JA008 | 100K 1/10W | 1 | PH |
| | R2053 | D0GB222JA008 | 2.2K 1/10W | 1 | PN |
| | R2055 | D0GB104JA008 | 100K 1/10W | 1 | |
| | R2056 | D0GB103JA008 | 10K 1/10W | 1 | |
| | R2058 | D0GB103JA008 | 10K 1/10W | 1 | |
| | R2060 | D0GB153JA008 | 15K 1/10W | 1 | PN |
| | R2060 | D0GB223JA008 | 22K 1/10W | 1 | PH |
| | R2064 | D0GBR00JA008 | 0 1/10W | 1 | |
| | R2066 | D0GBR00JA008 | 0 1/10W | 1 | |
| | R2067 | D0GB153JA008 | 15K 1/10W | 1 | |
| | R2068 | D0GB153JA008 | 15K 1/10W | 1 | |
| | R2069 | D0GB103JA008 | 10K 1/10W | 1 | |
| | R2070 | D0GB472JA008 | 4.7K 1/10W | 1 | |
| | R2071 | D0GB392JA008 | 3.9K 1/10W | 1 | |
| | R2074 | D0GBR00JA008 | 0 1/10W | 1 | |
| | R2075 | D0GB472JA008 | 4.7K 1/10W | 1 | |
| | R2077 | D0GB473JA008 | 47K 1/10W | 1 | |
| | R2078 | D0GB101JA008 | 100 1/10W | 1 | |
| | R2083 | D0GB473JA008 | 47K 1/10W | 1 | |
| | R2084 | D0GB564JA008 | 560K 1/10W | 1 | |
| | R2086 | D0GB104JA008 | 100K 1/10W | 1 | |
| | R2091 | D0GB101JA008 | 100 1/10W | 1 | |
| | R2093 | D0GB101JA008 | 100 1/10W | 1 | |
| | R2094 | D0GB101JA008 | 100 1/10W | 1 | |
| | R2095 | D0GB101JA008 | 100 1/10W | 1 | |
| | R2096 | D0GB101JA008 | 100 1/10W | 1 | |
| | R2097 | D0GB332JA008 | 3.3K 1/10W | 1 | |
| | R2100 | D0GBR00JA008 | 0 1/10W | 1 | |
| | R2105 | D0GB103JA008 | 10K 1/10W | 1 | |
| | R2106 | D0GB103JA008 | 10K 1/10W | 1 | |
| | R2107 | D0GB103JA008 | 10K 1/10W | 1 | |
| | R2108 | D0GB103JA008 | 10K 1/10W | 1 | |
| | R2109 | D0GB103JA008 | 10K 1/10W | 1 | |
| | R2113 | D0GB332JA008 | 3.3K 1/10W | 1 | |
| | R2114 | D0GB683JA008 | 68K 1/10W | 1 | |
| | R2115 | D0GB1R0JA008 | 1 1/10W | 1 | |
| | R2116 | D0GB103JA008 | 10K 1/10W | 1 | |
| | R2117 | D0GB103JA008 | 10K 1/10W | 1 | |
| | R2118 | D0GB103JA008 | 10K 1/10W | 1 | |
| | R2119 | D0GB103JA008 | 10K 1/10W | 1 | |
| | R2120 | D0GB473JA008 | 47K 1/10W | 1 | |
| | R2124 | D0GB471JA008 | 470 1/10W | 1 | |
| | R2125 | D0GB471JA008 | 470 1/10W | 1 | |
| | R2126 | D0GBR00JA008 | 0 1/10W | 1 | |
| | R2127 | D0GBR00JA008 | 0 1/10W | 1 | |
| | R2128 | D0GB183JA008 | 18K 1/10W | 1 | |
| | R2129 | D0GBR00JA008 | 0 1/10W | 1 | |
| | R2130 | D0GBR00JA008 | 0 1/10W | 1 | |
| | R2131 | D0GB103JA008 | 10K 1/10W | 1 | |
| | R2132 | D0GB103JA008 | 10K 1/10W | 1 | |
| | R2133 | D0GBR00JA008 | 0 1/10W | 1 | |
| | R2134 | D0GBR00JA008 | 0 1/10W | 1 | |
| | R2135 | D0GBR00JA008 | 0 1/10W | 1 | |
| | R2136 | D0GBR00JA008 | 0 1/10W | 1 | |
| | R2137 | D0GBR00JA008 | 0 1/10W | 1 | |
| | R2138 | D0GBR00JA008 | 0 1/10W | 1 | |
| | R2139 | D0GB332JA008 | 3.3K 1/10W | 1 | |
| | R2140 | D0GB332JA008 | 3.3K 1/10W | 1 | |
| | R2141 | D0GB332JA008 | 3.3K 1/10W | 1 | |
| | R2142 | D0GB332JA008 | 3.3K 1/10W | 1 | |
| | R2143 | D0GBR00JA008 | 0 1/10W | 1 | |
| | R2144 | D0GB472JA008 | 4.7K 1/10W | 1 | |
| | R2145 | D0GB472JA008 | 4.7K 1/10W | 1 | |
| | R2150 | D0GBR00JA008 | 0 1/10W | 1 | |
| | R2154 | D0GBR00JA008 | 0 1/10W | 1 | |
| | R2155 | D0GB681JA008 | 680 1/10W | 1 | |
| | R2156 | D0GB473JA008 | 47K 1/10W | 1 | |

| Safety | Ref. No. | Part No. | Part Name & Description | Qty | Remarks |
|---|---|---|---|---|---|
| | R2157 | D0GB123JA008 | 12K 1/10W | 1 | |
| | R2158 | D0GB2R2JA007 | 2.2 1/10W | 1 | |
| | R2159 | D0GB2R2JA007 | 2.2 1/10W | 1 | |
| | R2160 | D0GB2R2JA007 | 2.2 1/10W | 1 | |
| | R2161 | D0GB123JA008 | 12K 1/10W | 1 | |
| | R2162 | D0GB153JA008 | 15K 1/10W | 1 | |
| | R2163 | D0GB271JA008 | 270 1/10W | 1 | |
| | R2165 | D0GBR00JA008 | 0 1/10W | 1 | |
| | R2168 | D0HB392ZA002 | 3.9K 1/16W | 1 | |
| | R2169 | ERJ3RBD563V | 56K 1/16W | 1 | |
| | R2170 | ERJ3RBD103V | 10K 1/16W | 1 | |
| | R2175 | D0GBR00JA008 | 0 1/10W | 1 | PN |
| | R2177 | D0GBR00JA008 | 0 1/10W | 1 | PH |
| | R2178 | D0GB103JA008 | 10K 1/10W | 1 | |
| | R2179 | D0GB274JA007 | 270K 1/10W | 1 | |
| | R2180 | D0GB823JA008 | 82K 1/10W | 1 | |
| | R2183 | D0GB682JA008 | 6.8K 1/10W | 1 | |
| | R2184 | D0GB221JA007 | 220 1/10W | 1 | |
| | R2188 | D0GB274JA007 | 270K 1/10W | 1 | |
| | R2190 | D0GB104JA008 | 100K 1/10W | 1 | |
| | R2192 | D0GB101JA008 | 100 1/10W | 1 | |
| | R2196 | D0GB474JA008 | 470K 1/10W | 1 | |
| | R2199 | D0GBR00JA008 | 0 1/10W | 1 | |
| | R2200 | D0AF270JA039 | 27 1/4W | 1 | |
| | R2203 | D0GBR00JA008 | 0 1/10W | 1 | |
| | R2204 | D0GBR00JA008 | 0 1/10W | 1 | |
| | R2205 | D0GDR00JA017 | 0 1/8W | 1 | |
| | R2206 | D0GB103JA008 | 10K 1/10W | 1 | |
| | R2207 | D0GB102JA008 | 1K 1/10W | 1 | |
| | R2208 | D0GB101JA008 | 100 1/10W | 1 | |
| | R2209 | D0GB392JA008 | 3.9K 1/10W | 1 | |
| | R2210 | D0GB334JA008 | 330K 1/10W | 1 | |
| | R2213 | D0GB101JA008 | 100 1/10W | 1 | |
| | R2214 | D0GB101JA008 | 100 1/10W | 1 | |
| | R2215 | D0GB101JA008 | 100 1/10W | 1 | |
| | R2216 | D0GB101JA008 | 100 1/10W | 1 | |
| | R2217 | D0GB101JA008 | 100 1/10W | 1 | |
| | R2218 | D0GB101JA008 | 100 1/10W | 1 | |
| | R2219 | D0GB101JA008 | 100 1/10W | 1 | |
| | R2220 | D0GB101JA008 | 100 1/10W | 1 | |
| | R2221 | D0GB472JA008 | 4.7K 1/10W | 1 | |
| | R2222 | D0GB103JA008 | 10K 1/10W | 1 | |
| | R2237 | D0GB103JA008 | 10K 1/10W | 1 | |
| | R2278 | D0GB821JA008 | 820 1/10W | 1 | |
| | R2279 | D0GB101JA008 | 100 1/10W | 1 | |
| | R2503 | D0GB100JA008 | 10 1/10W | 1 | |
| | R2524 | D0GB223JA008 | 22K 1/10W | 1 | |
| | R2585 | ERJ3GEYJ3R3V | 3.3 1/10W | 1 | |
| | R2586 | ERJ3GEYJ3R3V | 3.3 1/10W | 1 | |
| | R2587 | ERJ3GEYJ3R3V | 3.3 1/10W | 1 | |
| | R2588 | ERJ3GEYJ3R3V | 3.3 1/10W | 1 | |
| | R2589 | ERJ3GEYJ3R3V | 3.3 1/10W | 1 | |
| | R2590 | ERJ3GEYJ3R3V | 3.3 1/10W | 1 | |
| | R2595 | ERJ3GEYJ3R3V | 3.3 1/10W | 1 | |
| | R2596 | ERJ3GEYJ3R3V | 3.3 1/10W | 1 | |
| | R2597 | ERJ3GEYJ3R3V | 3.3 1/10W | 1 | |
| | R2598 | ERJ3GEYJ3R3V | 3.3 1/10W | 1 | |
| | R2603 | D0GB223JA008 | 22K 1/10W | 1 | |
| | R2606 | D0GB100JA008 | 10 1/10W | 1 | |
| | R2612 | D0GB101JA008 | 100 1/10W | 1 | |
| | R2613 | D0GBR00JA008 | 0 1/10W | 1 | |
| | R2614 | D0GBR00JA008 | 0 1/10W | 1 | |
| | R2619 | D0GB223JA008 | 22K 1/10W | 1 | |
| | R2620 | D0GB100JA008 | 10 1/10W | 1 | |
| | R2653 | D0GB104JA008 | 100K 1/10W | 1 | |
| | R2654 | D0GB104JA008 | 100K 1/10W | 1 | |
| | R2655 | D0GB104JA008 | 100K 1/10W | 1 | |
| | R2656 | D0GB104JA008 | 100K 1/10W | 1 | |
| | R2657 | D0GB104JA008 | 100K 1/10W | 1 | |
| | R2658 | D0GB104JA008 | 100K 1/10W | 1 | |
| | R2659 | D0GB104JA008 | 100K 1/10W | 1 | |
| | R2660 | D0GB104JA008 | 100K 1/10W | 1 | |
| | R2661 | D0GB104JA008 | 100K 1/10W | 1 | |

| Safety | Ref. No. | Part No. | Part Name & Description | Qty | Remarks |
|---|---|---|---|---|---|
| | R2662 | D0GB104JA008 | 100K 1/10W | 1 | |
| | R2667 | D0GB822JA008 | 8.2K 1/10W | 1 | |
| | R2668 | D0GB104JA008 | 100K 1/10W | 1 | |
| | R2669 | D0GB223JA008 | 22K 1/10W | 1 | |
| | R2670 | D0GB104JA008 | 100K 1/10W | 1 | |
| | R2671 | D0GB472JA008 | 4.7K 1/10W | 1 | |
| | R3001 | D0GB103JA008 | 10K 1/10W | 1 | |
| | R3002 | D0GB101JA008 | 100 1/10W | 1 | |
| | R3003 | D0GB101JA008 | 100 1/10W | 1 | |
| | R3004 | D0GB101JA008 | 100 1/10W | 1 | |
| | R3005 | D0GB101JA008 | 100 1/10W | 1 | |
| | R3006 | D0GB101JA008 | 100 1/10W | 1 | |
| | R3007 | D0GB101JA008 | 100 1/10W | 1 | |
| | R3010 | D0GB473JA008 | 47K 1/10W | 1 | |
| | R3012 | D0GBR00JA008 | 0 1/10W | 1 | |
| | R3013 | D0GBR00JA008 | 0 1/10W | 1 | |
| | R3014 | D0GBR00JA008 | 0 1/10W | 1 | |
| | R3015 | D0GBR00JA008 | 0 1/10W | 1 | |
| | R3016 | D0GBR00JA008 | 0 1/10W | 1 | |
| | R3017 | D0GBR00JA008 | 0 1/10W | 1 | |
| | R3018 | D0GBR00JA008 | 0 1/10W | 1 | |
| | R3019 | D0GBR00JA008 | 0 1/10W | 1 | |
| | R3020 | D0GBR00JA008 | 0 1/10W | 1 | |
| | R3021 | D0GBR00JA008 | 0 1/10W | 1 | |
| | R3022 | D0GBR00JA008 | 0 1/10W | 1 | |
| | R3023 | D0GBR00JA008 | 0 1/10W | 1 | |
| | R3024 | D0GBR00JA008 | 0 1/10W | 1 | |
| | R3025 | D0GBR00JA008 | 0 1/10W | 1 | |
| | R3026 | D0GBR00JA008 | 0 1/10W | 1 | |
| | R3027 | D0GBR00JA008 | 0 1/10W | 1 | |
| | R3028 | D0GBR00JA008 | 0 1/10W | 1 | |
| | R3029 | D0GB103JA008 | 10K 1/10W | 1 | |
| | R3031 | D0GB103JA008 | 10K 1/10W | 1 | |
| | R3032 | D0GB102JA008 | 1K 1/10W | 1 | |
| | R3033 | D0GBR00JA008 | 0 1/10W | 1 | |
| | R3034 | D0GBR00JA008 | 0 1/10W | 1 | |
| | R3106 | D0GBR00JA008 | 0 1/10W | 1 | |
| | R3107 | D0GBR00JA008 | 0 1/10W | 1 | |
| | R3108 | D0GBR00JA008 | 0 1/10W | 1 | |
| | R3109 | D0GBR00JA008 | 0 1/10W | 1 | |
| | R3110 | D0GB331JA008 | 330 1/10W | 1 | |
| | R3111 | D0GB104JA008 | 100K 1/10W | 1 | |
| | R3112 | D0GB102JA008 | 1K 1/10W | 1 | |
| | R3113 | D0GB102JA008 | 1K 1/10W | 1 | |
| | R3114 | D0GB102JA008 | 1K 1/10W | 1 | |
| | R3132 | D0GBR00JA008 | 0 1/10W | 1 | |
| | R3200 | D0GB101JA008 | 100 1/10W | 1 | |
| | R3201 | D0GB103JA008 | 10K 1/10W | 1 | |
| | R3202 | D0GB823JA008 | 82K 1/10W | 1 | |
| | R3203 | D0GB101JA008 | 100 1/10W | 1 | |
| | R3204 | D0GB101JA008 | 100 1/10W | 1 | |
| | R3213 | D0GB101JA008 | 100 1/10W | 1 | |
| | R3214 | D0GB334JA008 | 330K 1/10W | 1 | |
| | R3215 | D0GB392JA008 | 3.9K 1/10W | 1 | |
| | R3216 | D0GB823JA008 | 82K 1/10W | 1 | |
| | R3217 | D0GB101JA008 | 100 1/10W | 1 | |
| | R3218 | D0GB101JA008 | 100 1/10W | 1 | |
| | R3219 | D0GB101JA008 | 100 1/10W | 1 | |
| | R3220 | D0GB103JA008 | 10K 1/10W | 1 | |
| | R3222 | D0GB103JA008 | 10K 1/10W | 1 | |
| | R3224 | D0GB103JA008 | 10K 1/10W | 1 | |
| | R3225 | D0GBR00JA008 | 0 1/10W | 1 | |
| | R3226 | D0GB333JA008 | 33K 1/10W | 1 | |
| | R3227 | D0GB562JA008 | 5.6K 1/10W | 1 | |
| | R3232 | D0GB101JA008 | 100 1/10W | 1 | |
| | R3235 | D0GB101JA008 | 100 1/10W | 1 | |
| | R3302 | D0GB124JA008 | 120K 1/10W | 1 | |
| | R3307 | D0GBR00JA008 | 0 1/10W | 1 | |
| | R3308 | D0GBR00JA008 | 0 1/10W | 1 | |
| | R3310 | ERJ3RBD823V | 82K 1/16W | 1 | |
| | R3311 | ERJ3RBD104V | 100K 1/16W | 1 | |
| | R3312 | ERJ3RBD103V | 10K 1/16W | 1 | |
| | R3313 | D0GB682JA008 | 6.8K 1/10W | 1 | |

| Safety | Ref. No. | Part No. | Part Name & Description | Qty | Remarks |
|---|---|---|---|---|---|
| | R3314 | D0GB184JA008 | 180K 1/10W | 1 | |
| | R3351 | D0GBR00JA008 | 0 1/10W | 1 | |
| | R3354 | D0GB102JA008 | 1K 1/10W | 1 | |
| | R3355 | ERJ3GEYJ185V | 1.8M 1/10W | 1 | |
| | R3356 | D0GB102JA008 | 1K 1/10W | 1 | |
| | R3357 | ERJ3GEYJ185V | 1.8M 1/10W | 1 | |
| | R3400 | D0GBR00JA008 | 0 1/10W | 1 | |
| | R3401 | D0GBR00JA008 | 0 1/10W | 1 | |
| | R3405 | D0GB103JA008 | 10K 1/10W | 1 | |
| | R3501 | D0GBR00JA008 | 0 1/10W | 1 | |
| | R3623 | D0GBR00JA008 | 0 1/10W | 1 | |
| | R3631 | D0GBR00JA008 | 0 1/10W | 1 | |
| | R3632 | D0GBR00JA008 | 0 1/10W | 1 | |
| | R3641 | D0GB101JA008 | 100 1/10W | 1 | |
| | R3643 | D0GB101JA008 | 100 1/10W | 1 | |
| | R3647 | D0GB101JA008 | 100 1/10W | 1 | |
| | R3649 | D0GBR00JA008 | 0 1/10W | 1 | |
| | R3650 | D0GBR00JA008 | 0 1/10W | 1 | |
| | R3651 | D0GBR00JA008 | 0 1/10W | 1 | |
| | R3652 | D0GBR00JA008 | 0 1/10W | 1 | |
| | R3653 | D0GBR00JA008 | 0 1/10W | 1 | |
| | R3654 | D0GBR00JA008 | 0 1/10W | 1 | |
| | R3655 | D0GBR00JA008 | 0 1/10W | 1 | |
| | R3656 | D0GBR00JA008 | 0 1/10W | 1 | |
| | R3657 | D0GBR00JA008 | 0 1/10W | 1 | |
| | R3658 | D0GBR00JA008 | 0 1/10W | 1 | |
| | R3659 | D0GB100JA008 | 10 1/10W | 1 | |
| | R3660 | D0GB100JA008 | 10 1/10W | 1 | |
| | R3661 | D0GB100JA008 | 10 1/10W | 1 | |
| | R3662 | D0GB100JA008 | 10 1/10W | 1 | |
| | R3665 | D0GB100JA008 | 10 1/10W | 1 | |
| | R3667 | D0GB100JA008 | 10 1/10W | 1 | |
| | R4000 | D0GB222JA008 | 2.2K 1/10W | 1 | |
| | R5700 | D0GB104JA065 | 100K 1/10W | 1 | PH |
| | R5700 | D0GB222JA065 | 2.2K 1/10W | 1 | PN |
| | R5702 | D0GZ104JA012 | 100K 1W | 1 | |
| | R5703 | D0GZ104JA012 | 100K 1W | 1 | |
| | R5704 | D0GF224JA048 | 220K 1/4W | 1 | |
| | R5705 | D0GF224JA048 | 220K 1/4W | 1 | |
| | R5706 | D0GD824JA052 | 820K 1/8W | 1 | |
| ⚠ | R5708 | D0GF155JA048 | 1.5M 1/4W | 1 | |
| ⚠ | R5709 | D0GF155JA048 | 1.5M 1/4W | 1 | |
| | R5710 | D0GB394JA065 | 390K 1/10W | 1 | |
| | R5711 | D0GF100JA048 | 10 1/4W | 1 | |
| | R5712 | D0GF103JA048 | 10K 1/4W | 1 | |
| | R5713 | D0GF331JA048 | 330 1/4W | 1 | |
| | R5714 | ERX2SZJR18P | 0.18 2W | 1 | |
| | R5715 | D0GZ104JA012 | 100K 1W | 1 | |
| | R5716 | D0GZ104JA012 | 100K 1W | 1 | |
| | R5717 | D0GZ104JA012 | 100K 1W | 1 | |
| | R5718 | D0GZ104JA012 | 100K 1W | 1 | |
| | R5720 | D0GD220JA052 | 22 1/8W | 1 | |
| | R5721 | D0GD103JA052 | 10K 1/8W | 1 | |
| | R5722 | D0GD122JA052 | 1.2K 1/8W | 1 | |
| | R5723 | D0GB102JA065 | 1K 1/10W | 1 | |
| | R5724 | D0GD121JA052 | 120 1/8W | 1 | |
| | R5727 | ERX2SZJR18P | 0.18 2W | 1 | |
| | R5728 | D0GB104JA065 | 100K 1/10W | 1 | |
| | R5729 | D0GD103JA052 | 10K 1/8W | 1 | |
| | R5730 | D0GB102JA065 | 1K 1/10W | 1 | |
| | R5732 | D0GD101JA052 | 100 1/8W | 1 | |
| | R5733 | D0GB473JA065 | 47K 1/10W | 1 | |
| | R5786 | D0GZ204JA012 | 200K 1W | 1 | PH |
| | R5795 | D0GD474JA052 | 470K 1/8W | 1 | |
| | R5797 | D0GB153JA065 | 15K 1/10W | 1 | |
| | R5798 | D0GD220JA052 | 22 1/8W | 1 | |
| | R5802 | D1BB8202A074 | 82K 1/10W | 1 | |
| | R5805 | D1BB5601A074 | 5.6K 1/10W | 1 | |
| | R5806 | D1BB1502A074 | 15K 1/10W | 1 | |
| | R5807 | D0GD182JA052 | 1.8K 1/8W | 1 | |
| | R5808 | D0GD222JA052 | 2.2K 1/8W | 1 | |
| | R5810 | D0GB331JA065 | 330 1/10W | 1 | |
| | R5814 | D0GB104JA065 | 100K 1/10W | 1 | |

| Safety | Ref. No. | Part No. | Part Name & Description | Qty | Remarks |
|---|---|---|---|---|---|
| | R5865 | D1BD1800A066 | 1.8K 1/8W | 1 | |
| | R5890 | D0GB222JA065 | 2.2K 1/10W | 1 | |
| | R5891 | D1BB3302A074 | 33K 1/10W | 1 | |
| | R5892 | D1BB1001A074 | 1K 1/10W | 1 | |
| | R5893 | D1BB1002A074 | 10K 1/10W | 1 | |
| | R5894 | D0GB151JA065 | 150 1/10W | 1 | |
| | R5895 | D0GB153JA065 | 15K 1/10W | 1 | |
| | R5896 | D0GB104JA065 | 100K 1/10W | 1 | |
| | R5897 | D0GB101JA065 | 100 1/10W | 1 | |
| | R5898 | D1BB1002A074 | 10K 1/10W | 1 | |
| | R5901 | ERG2SJ471E | 470 2W | 1 | |
| | R5902 | ERG2SJ471E | 470 2W | 1 | |
| | R5903 | ERG2SJ471E | 470 2W | 1 | |
| | R5904 | ERG2SJ471E | 470 2W | 1 | |
| | R5905 | ERG2SJ471E | 470 2W | 1 | |
| | R5906 | ERG2SJ471E | 470 2W | 1 | |
| | R5907 | ERG2SJ471E | 470 2W | 1 | |
| | R5908 | ERG2SJ471E | 470 2W | 1 | |
| | R5909 | D0GB102JA065 | 1K 1/10W | 1 | |
| | R6000 | D0GB272JA008 | 2.7K 1/10W | 1 | |
| | R6001 | D0GB470JA008 | 47 1/10W | 1 | |
| | R6002 | D0GB101JA008 | 100 1/10W | 1 | |
| | R6003 | D0GB181JA008 | 180 1/10W | 1 | |
| | R6004 | D0GB681JA008 | 680 1/10W | 1 | |
| | R6005 | D0GB181JA008 | 180 1/10W | 1 | |
| | R6006 | D0GB122JA008 | 1.2K 1/10W | 1 | |
| | R6007 | D0GB152JA008 | 1.5K 1/10W | 1 | |
| | R6008 | D0GB222JA008 | 2.2K 1/10W | 1 | |
| | R6009 | D0GB332JA008 | 3.3K 1/10W | 1 | |
| | R6010 | D0GB472JA008 | 4.7K 1/10W | 1 | |
| | R6011 | D0GBR00JA008 | 0 1/10W | 1 | |
| | R6012 | D0GB331JA008 | 330 1/10W | 1 | |
| | R6013 | D0GB103JA008 | 10K 1/10W | 1 | |
| | R6016 | D0GB221JA007 | 220 1/10W | 1 | |
| | R6017 | D0GB471JA008 | 470 1/10W | 1 | |
| | R6018 | D0GB221JA007 | 220 1/10W | 1 | |
| | R6019 | D0GBR00JA008 | 0 1/10W | 1 | |
| | R6021 | D0GBR00JA008 | 0 1/10W | 1 | |
| | R6023 | D0GB823JA008 | 82K 1/10W | 1 | |
| | R6025 | D0GB562JA008 | 5.6K 1/10W | 1 | |
| | R6026 | D0GB220JA008 | 22 1/10W | 1 | |
| | R6028 | D0GB1R0JA008 | 1 1/10W | 1 | |
| | R6029 | D0GB473JA008 | 47K 1/10W | 1 | |
| | R6030 | D0GB1R0JA008 | 1 1/10W | 1 | |
| | R6032 | D0GB100JA008 | 10 1/10W | 1 | |
| | R6033 | D0GB223JA008 | 22K 1/10W | 1 | |
| | R6100 | D0GB122JA008 | 1.2K 1/10W | 1 | |
| | R6101 | D0GB152JA008 | 1.5K 1/10W | 1 | |
| | R6102 | D0GB222JA008 | 2.2K 1/10W | 1 | |
| | R6103 | D0GB332JA008 | 3.3K 1/10W | 1 | |
| | R6104 | D0GB472JA008 | 4.7K 1/10W | 1 | |
| | R6105 | D0GB151JA008 | 150 1/10W | 1 | |
| | R6107 | D0GB151JA008 | 150 1/10W | 1 | |
| | R6109 | D0GB103JA008 | 10K 1/10W | 1 | |
| | R6110 | D0GB103JA008 | 10K 1/10W | 1 | |
| | R6111 | D0GB103JA008 | 10K 1/10W | 1 | |
| | R6112 | D0GB391JA008 | 390 1/10W | 1 | |
| | R6113 | D0GB221JA007 | 220 1/10W | 1 | |
| | R6114 | D0GB181JA008 | 180 1/10W | 1 | |
| | R6120 | D0GB391JA008 | 390 1/10W | 1 | |
| | R6122 | D0GB221JA007 | 220 1/10W | 1 | |
| | R6125 | D0GBR00JA008 | 0 1/10W | 1 | |
| | R6200 | D0GB122JA008 | 1.2K 1/10W | 1 | |
| | R6201 | D0GB152JA008 | 1.5K 1/10W | 1 | |
| | R6202 | D0GB222JA008 | 2.2K 1/10W | 1 | |
| | R6203 | D0GB332JA008 | 3.3K 1/10W | 1 | |
| | R6204 | D0GB153JA008 | 15K 1/10W | 1 | |
| | R6206 | D0GB472JA008 | 4.7K 1/10W | 1 | |
| | R6207 | D0GB682JA008 | 6.8K 1/10W | 1 | |
| | R6208 | D0GB103JA008 | 10K 1/10W | 1 | |
| | R6209 | D0GB103JA008 | 10K 1/10W | 1 | |
| | R6210 | D0GB473JA008 | 47K 1/10W | 1 | |
| | R6211 | D0GB103JA008 | 10K 1/10W | 1 | |

| Safety | Ref. No. | Part No. | Part Name & Description | Qty | Remarks |
|---|---|---|---|---|---|
| | R8001 | ERJ2GE0R00X | 0 1/16W | 1 | |
| | R8002 | D0GB103JA065 | 10K 1/10W | 1 | |
| | R8005 | D0GB105JA065 | 1M 1/10W | 1 | |
| | R8006 | D0GB221JA065 | 220 1/10W | 1 | |
| | R8010 | D0GA104JA023 | 100K 1/16W | 1 | |
| | R8011 | D0GA104JA023 | 100K 1/16W | 1 | |
| | R8013 | D0GB330JA008 | 33 1/10W | 1 | |
| | R8014 | D0GB330JA008 | 33 1/10W | 1 | |
| | R8015 | D0GB330JA008 | 33 1/10W | 1 | |
| | R8021 | D0GA330JA023 | 33 1/16W | 1 | |
| | R8022 | D0GB100JA065 | 10 1/10W | 1 | |
| | R8025 | ERJ2GE0R00X | 0 1/16W | 1 | |
| | R8026 | ERJ2GE0R00X | 0 1/16W | 1 | |
| | R8027 | D0GB100JA065 | 10 1/10W | 1 | |
| | R8029 | D0GA330JA023 | 33 1/16W | 1 | |
| | R8031 | D0GA103JA023 | 10K 1/16W | 1 | |
| | R8032 | D0GBR00J0004 | 0 1/10W | 1 | |
| | R8042 | D0GA103JA023 | 10K 1/16W | 1 | |
| | R8043 | ERJ2GE0R00X | 0 1/16W | 1 | |
| | R8044 | ERJ2GE0R00X | 0 1/16W | 1 | |
| | R8045 | ERJ2GE0R00X | 0 1/16W | 1 | |
| | R8046 | D0GB103JA065 | 10K 1/10W | 1 | |
| | R8047 | D0GB103JA065 | 10K 1/10W | 1 | |
| | R8209 | D0GB225JA065 | 2.2M 1/10W | 1 | |
| | R8210 | D0GB821JA065 | 820 1/10W | 1 | |
| | R8211 | D0GB272JA065 | 2.7K 1/10W | 1 | |
| | R8212 | D0GB4R7JA065 | 4.7 1/10W | 1 | |
| | R8214 | D0GB103JA065 | 10K 1/10W | 1 | |
| | R8215 | D0GB5R6JA065 | 5.6 1/10W | 1 | |
| | R8251 | D0GB330JA065 | 33 1/10W | 1 | |
| | R8252 | D0GB102JA065 | 1K 1/10W | 1 | |
| | R8254 | D0GB562JA065 | 5.6K 1/10W | 1 | |
| | R8255 | D0GB332JA065 | 3.3K 1/10W | 1 | |
| | R8256 | D0GB101JA065 | 100 1/10W | 1 | |
| | R8257 | D0GB562JA065 | 5.6K 1/10W | 1 | |
| | R8258 | D0GB273JA065 | 27K 1/10W | 1 | |
| | R8259 | D0GB472JA065 | 4.7K 1/10W | 1 | |
| | R8260 | D0GB473JA065 | 47K 1/10W | 1 | |
| | R8261 | D0GB101JA065 | 100 1/10W | 1 | |
| | R8262 | D0GB100JA065 | 10 1/10W | 1 | |
| | R8263 | D0GB102JA065 | 1K 1/10W | 1 | |
| | R8264 | D0GB122JA065 | 1.2K 1/10W | 1 | |
| | R8265 | D0GB104JA065 | 100K 1/10W | 1 | |
| | R8301 | D0GBR00J0004 | 0 1/10W | 1 | |
| | R8302 | D0GBR00J0004 | 0 1/10W | 1 | |
| | R8501 | ERJ2GE0R00X | 0 1/16W | 1 | |
| | R8502 | D0GA473JA023 | 47K 1/16W | 1 | |
| | R8503 | D0GA473JA023 | 47K 1/16W | 1 | |
| | R8504 | D0GA473JA023 | 47K 1/16W | 1 | |
| | R8505 | D0GA473JA023 | 47K 1/16W | 1 | |
| | R8506 | D0GA473JA023 | 47K 1/16W | 1 | |
| | R8507 | D0GA473JA023 | 47K 1/16W | 1 | |
| | R9001 | ERJ2RKD300X | 30 1/16W | 1 | |
| | R9002 | ERJ2RKD300X | 30 1/16W | 1 | |
| | R9003 | D0GA153JA023 | 15K 1/16W | 1 | |
| | R9004 | D0GA153JA023 | 15K 1/16W | 1 | |
| | R9005 | ERJ2RKD300X | 30 1/16W | 1 | |
| | R9006 | ERJ2RKD300X | 30 1/16W | 1 | |
| | R9007 | D0GA153JA023 | 15K 1/16W | 1 | |
| | R9008 | D0GA153JA023 | 15K 1/16W | 1 | |
| | | | | | |
| | | | CAPACITORS | | |
| | | | | | |
| | C2000 | F1H1H104B047 | 0.1uF 50V | 1 | |
| | C2004 | F1H1H102B047 | 1000pF 50V | 1 | |
| | C2005 | F1H1E105A153 | 1uF 25V | 1 | |
| | C2007 | F1H1E105A153 | 1uF 25V | 1 | |
| | C2009 | F1H1C474A178 | 0.47uF 16V | 1 | |
| | C2010 | F1H1H104B047 | 0.1uF 50V | 1 | |
| | C2011 | F1H1H104B047 | 0.1uF 50V | 1 | |
| | C2016 | F1H1E105A153 | 1uF 25V | 1 | |
| | C2017 | F1H1H561B052 | 560pF 50V | 1 | |
| | C2019 | F1G1C104A077 | 0.1uF 16V | 1 | |

| Safety | Ref. No. | Part No. | Part Name & Description | Qty | Remarks |
|---|---|---|---|---|---|
| | C2020 | F1H1H561B052 | 560pF 50V | 1 | |
| | C2021 | F1H1E105A153 | 1uF 25V | 1 | |
| | C2024 | F1H1E105A153 | 1uF 25V | 1 | |
| | C2025 | F1H1E105A153 | 1uF 25V | 1 | |
| | C2026 | F1H1E105A153 | 1uF 25V | 1 | |
| | C2029 | F1H1H104B047 | 0.1uF 50V | 1 | |
| | C2030 | F1H1H104B047 | 0.1uF 50V | 1 | |
| | C2032 | F1H1H104B047 | 0.1uF 50V | 1 | |
| | C2034 | F1H1H104B047 | 0.1uF 50V | 1 | |
| | C2042 | F1H1H104B047 | 0.1uF 50V | 1 | |
| | C2051 | F1J1A106A043 | 10uF 10V | 1 | |
| | C2052 | F1H1H180A230 | 18pF 50V | 1 | |
| | C2053 | F1H1H180A230 | 18pF 50V | 1 | |
| | C2054 | F1H1H104B047 | 0.1uF 50V | 1 | |
| | C2055 | F1H1H104B047 | 0.1uF 50V | 1 | |
| | C2056 | F1H1H104B047 | 0.1uF 50V | 1 | |
| | C2057 | F2A0J2220055 | 2200uF 6.3V | 1 | |
| | C2058 | F1J1A106A043 | 10uF 10V | 1 | |
| | C2059 | F1H1E105A153 | 1uF 25V | 1 | |
| | C2060 | F1H1H104B047 | 0.1uF 50V | 1 | |
| | C2061 | F1H1H104B047 | 0.1uF 50V | 1 | |
| | C2062 | F1H1H473B047 | 0.047uF 50V | 1 | |
| | C2063 | F1H1H473B047 | 0.047uF 50V | 1 | |
| | C2064 | F2A1H3R3A213 | 3.3uF 50V | 1 | |
| | C2065 | F1H1H472B047 | 4700pF 50V | 1 | |
| | C2066 | F1H1H472B047 | 4700pF 50V | 1 | |
| | C2067 | F1H1H103B047 | 0.01uF 50V | 1 | |
| | C2068 | F1H1H103B047 | 0.01uF 50V | 1 | |
| | C2069 | F1J1A106A043 | 10uF 10V | 1 | |
| | C2074 | F1H1H104B047 | 0.1uF 50V | 1 | |
| | C2075 | F1H1H104B047 | 0.1uF 50V | 1 | |
| | C2076 | F1H1H104B047 | 0.1uF 50V | 1 | |
| | C2077 | F1H1H331B052 | 330pF 50V | 1 | |
| | C2078 | F1J1A106A043 | 10uF 10V | 1 | |
| | C2080 | F1J1A106A043 | 10uF 10V | 1 | |
| | C2081 | F1J1A106A043 | 10uF 10V | 1 | |
| | C2082 | F1H1H104B047 | 0.1uF 50V | 1 | |
| | C2084 | F1J1A106A043 | 10uF 10V | 1 | |
| | C2085 | F2A0J102A247 | 1000uF 6.3V | 1 | |
| | C2086 | F1H1H104B047 | 0.1uF 50V | 1 | |
| | C2087 | F2A1A221B161 | 220uF 10V | 1 | |
| | C2089 | F2A1A101B138 | 100uF 10V | 1 | |
| | C2090 | F1J1A106A043 | 10uF 10V | 1 | |
| | C2092 | F1H1H472B047 | 4700pF 50V | 1 | |
| | C2094 | F2A0J101A181 | 100uF 6.3V | 1 | |
| | C2096 | F2A1E330B389 | 33uF 25V | 1 | |
| | C2097 | F1H1H104B047 | 0.1uF 50V | 1 | |
| | C2098 | F1H1H104B047 | 0.1uF 50V | 1 | |
| | C2099 | F1H1E105A153 | 1uF 25V | 1 | |
| | C2102 | F1J1A106A043 | 10uF 10V | 1 | |
| | C2103 | F1H1H103B047 | 0.01uF 50V | 1 | |
| | C2104 | F1K1H475A256 | 4.7uF 50V | 1 | |
| | C2105 | F2A0J221B034 | 220uF 6.3V | 1 | |
| | C2107 | F1H1H104B047 | 0.1uF 50V | 1 | |
| | C2109 | F1K1H475A256 | 4.7uF 50V | 1 | |
| | C2110 | F1J1A106A043 | 10uF 10V | 1 | |
| | C2111 | F1H1E105A153 | 1uF 25V | 1 | |
| | C2112 | F1H1E105A153 | 1uF 25V | 1 | |
| | C2187 | F1H1H103A219 | 0.01uF 50V | 1 | |
| | C2188 | F2A1C221B456 | 220uF 16V | 1 | |
| | C2191 | F1H1H103A219 | 0.01uF 50V | 1 | |
| | C2500 | F2A1C330B453 | 33uF 16V | 1 | |
| | C2504 | F1J1C106A059 | 10uF 16V | 1 | |
| | C2508 | F1H1H104B047 | 0.1uF 50V | 1 | |
| | C2509 | F1H1H104B047 | 0.1uF 50V | 1 | |
| | C2521 | F1H1H104B047 | 0.1uF 50V | 1 | |
| | C2522 | F1H1H104B047 | 0.1uF 50V | 1 | |
| | C2523 | F1H1H104B047 | 0.1uF 50V | 1 | |
| | C2524 | F1H1H104B047 | 0.1uF 50V | 1 | |
| | C2525 | F1H1H104B047 | 0.1uF 50V | 1 | |
| | C2526 | F1H1H104B047 | 0.1uF 50V | 1 | |
| | C2527 | F1H1H104B047 | 0.1uF 50V | 1 | |
| | C2528 | F1H1H104B047 | 0.1uF 50V | 1 | |

| Safety | Ref. No. | Part No. | Part Name & Description | Qty | Remarks |
|---|---|---|---|---|---|
| | C2529 | F1H1H104B047 | 0.1uF 50V | 1 | |
| | C2530 | F1H1H104B047 | 0.1uF 50V | 1 | |
| | C2541 | F1H1H333B055 | 0.033uF 50V | 1 | |
| | C2542 | F1H1H333B055 | 0.033uF 50V | 1 | |
| | C2543 | F1H1H333B055 | 0.033uF 50V | 1 | |
| | C2544 | F1H1H333B055 | 0.033uF 50V | 1 | |
| | C2545 | F1H1H333B055 | 0.033uF 50V | 1 | |
| | C2546 | F1H1H333B055 | 0.033uF 50V | 1 | |
| | C2547 | F1H1H333B055 | 0.033uF 50V | 1 | |
| | C2548 | F1H1H333B055 | 0.033uF 50V | 1 | |
| | C2549 | F1H1H333B055 | 0.033uF 50V | 1 | |
| | C2550 | F1H1H333B055 | 0.033uF 50V | 1 | |
| | C2551 | F1H1H333B055 | 0.033uF 50V | 1 | |
| | C2552 | F1H1H333B055 | 0.033uF 50V | 1 | |
| | C2561 | F1K1H105A138 | 1uF 50V | 1 | |
| | C2562 | F1H1H104B047 | 0.1uF 50V | 1 | |
| | C2563 | F1H1H104B047 | 0.1uF 50V | 1 | |
| | C2564 | F1K1H105A138 | 1uF 50V | 1 | |
| | C2571 | F1K1H105A138 | 1uF 50V | 1 | |
| | C2572 | F1K1H105A138 | 1uF 50V | 1 | |
| | C2597 | F1J1H2240017 | 0.22uF 50V | 1 | |
| | C2598 | F1J1H2240017 | 0.22uF 50V | 1 | |
| | C2599 | F1J1H2240017 | 0.22uF 50V | 1 | |
| | C2600 | F1J1H2240017 | 0.22uF 50V | 1 | |
| | C2601 | F1J1H2240017 | 0.22uF 50V | 1 | |
| | C2602 | F1J1H2240017 | 0.22uF 50V | 1 | |
| | C2603 | F1J1H2240017 | 0.22uF 50V | 1 | |
| | C2604 | F1J1H2240017 | 0.22uF 50V | 1 | |
| | C2607 | F1J1H2240017 | 0.22uF 50V | 1 | |
| | C2608 | F1J1H2240017 | 0.22uF 50V | 1 | |
| | C2631 | F1J1A106A043 | 10uF 10V | 1 | |
| | C2632 | F1J1A106A043 | 10uF 10V | 1 | |
| | C2633 | F1H1E105A153 | 1uF 25V | 1 | |
| | C2646 | F1H1H103B047 | 0.01uF 50V | 1 | |
| | C2647 | F1H1H103B047 | 0.01uF 50V | 1 | |
| | C2648 | F1H1H103B047 | 0.01uF 50V | 1 | |
| | C2649 | F1H1H103B047 | 0.01uF 50V | 1 | |
| | C2650 | F1H1H103B047 | 0.01uF 50V | 1 | |
| | C2651 | F1H1H103B047 | 0.01uF 50V | 1 | |
| | C2656 | F1H1H103B047 | 0.01uF 50V | 1 | |
| | C2657 | F1H1H103B047 | 0.01uF 50V | 1 | |
| | C2658 | F1H1H103B047 | 0.01uF 50V | 1 | |
| | C2659 | F1H1H103B047 | 0.01uF 50V | 1 | |
| | C2662 | D0GBR00J0004 | 0 1/10W | 1 | |
| | C2679 | D0GBR00J0004 | 0 1/10W | 1 | |
| | C2682 | F1H1H102B047 | 1000pF 50V | 1 | |
| | C2683 | F1H1H102B047 | 1000pF 50V | 1 | |
| | C2684 | F1H1H102B047 | 1000pF 50V | 1 | |
| | C2685 | F1H1H102B047 | 1000pF 50V | 1 | |
| | C2686 | F1H1H102B047 | 1000pF 50V | 1 | |
| | C2692 | F1H1H102B047 | 1000pF 50V | 1 | |
| | C2693 | F1H1H102B047 | 1000pF 50V | 1 | |
| | C2694 | F1H1H102B047 | 1000pF 50V | 1 | |
| | C2695 | F1H1H102B047 | 1000pF 50V | 1 | |
| | C2701 | F1J1C106A059 | 10uF 16V | 1 | |
| | C2706 | F1K1H105A138 | 1uF 50V | 1 | |
| | C2707 | F1K1H105A138 | 1uF 50V | 1 | |
| | C2708 | F1H1H104B047 | 0.1uF 50V | 1 | |
| | C2709 | F1H1H104B047 | 0.1uF 50V | 1 | |
| | C2710 | F1J1C106A059 | 10uF 16V | 1 | |
| | C2711 | F1H1H104B047 | 0.1uF 50V | 1 | |
| | C2712 | F1H1H104B047 | 0.1uF 50V | 1 | |
| | C2713 | F1H1H104B047 | 0.1uF 50V | 1 | |
| | C2714 | F1H1H104B047 | 0.1uF 50V | 1 | |
| | C2715 | F1H1H104B047 | 0.1uF 50V | 1 | |
| | C2716 | F1H1H104B047 | 0.1uF 50V | 1 | |
| | C2721 | F1K1H105A138 | 1uF 50V | 1 | |
| | C2722 | F1K1H105A138 | 1uF 50V | 1 | |
| | C2723 | F1H1H104B047 | 0.1uF 50V | 1 | |
| | C2724 | F1H1H104B047 | 0.1uF 50V | 1 | |
| | C2744 | F1K1H105A138 | 1uF 50V | 1 | |
| | C2745 | F1K1H105A138 | 1uF 50V | 1 | |
| | C2746 | F1K1H105A138 | 1uF 50V | 1 | |

| Safety | Ref. No. | Part No. | Part Name & Description | Qty | Remarks |
|---|---|---|---|---|---|
| | C2747 | F1K1H105A138 | 1uF 50V | 1 | |
| | C2750 | ECQV1H474JL3 | 0.47uF 50V | 1 | |
| | C2751 | ECQV1H474JL3 | 0.47uF 50V | 1 | |
| | C2752 | ECQV1H474JL3 | 0.47uF 50V | 1 | |
| | C2753 | ECQV1H474JL3 | 0.47uF 50V | 1 | |
| | C2754 | ECQV1H474JL3 | 0.47uF 50V | 1 | |
| | C3000 | F1H1H104B047 | 0.1uF 50V | 1 | |
| | C3001 | F1H1E105A153 | 1uF 25V | 1 | |
| | C3002 | F1H1H104B047 | 0.1uF 50V | 1 | |
| | C3200 | F1H1H473B047 | 0.047uF 50V | 1 | |
| | C3201 | F1H1H473B047 | 0.047uF 50V | 1 | |
| | C3207 | F1H1H473B047 | 0.047uF 50V | 1 | |
| | C3208 | F1J1A106A043 | 10uF 10V | 1 | |
| | C3209 | F1H1H473B047 | 0.047uF 50V | 1 | |
| | C3210 | F1H1E105A153 | 1uF 25V | 1 | |
| | C3211 | F1H1E105A153 | 1uF 25V | 1 | |
| | C3212 | F2A1C100A234 | 10uF 16V | 1 | |
| | C3214 | F2A1C100A234 | 10uF 16V | 1 | |
| | C3215 | F1H1H103B047 | 0.01uF 50V | 1 | |
| | C3218 | F1H1H180A230 | 18pF 50V | 1 | |
| | C3219 | F1J1A106A043 | 10uF 10V | 1 | |
| | C3223 | F1H1H470B052 | 47pF 50V | 1 | |
| | C3224 | F1H1H470B052 | 47pF 50V | 1 | |
| | C3300 | F2A1H1020067 | 1000uF 50V | 1 | |
| | C3302 | F1H1H562B047 | 5600pF 50V | 1 | |
| | C3303 | F1H1H103B047 | 0.01uF 50V | 1 | |
| | C3306 | F1K1E106A078 | 10uF 25V | 1 | |
| | C3307 | F2A0J102A247 | 1000uF 6.3V | 1 | |
| | C3308 | F1H1H104B047 | 0.1uF 50V | 1 | |
| | C3309 | F1H1H104B047 | 0.1uF 50V | 1 | |
| | C3310 | F1H1H104B047 | 0.1uF 50V | 1 | |
| | C3351 | F1H1H104B047 | 0.1uF 50V | 1 | |
| | C3402 | F2A0J221B034 | 220uF 6.3V | 1 | |
| ⚠ | C5700 | F1BAF1020020 | 1000pF | 1 | PH |
| ⚠ | C5700 | F1BAF471A013 | 470pF | 1 | PN |
| ⚠ | C5701 | F0CAF104A105 | 0.1uF | 1 | |
| ⚠ | C5703 | F0CAF224A105 | 0.22uF | 1 | |
| ⚠ | C5704 | F1BAF471A013 | 470pF | 1 | PN |
| ⚠ | C5705 | F1BAF471A013 | 470pF | 1 | PN |
| ⚠ | C5706 | F1BAF471A013 | 470pF | 1 | |
| ⚠ | C5707 | F1BAF471A013 | 470pF | 1 | |
| ⚠ | C5708 | F1BAF1020020 | 1000pF | 1 | PH |
| ⚠ | C5708 | F1BAF471A013 | 470pF | 1 | PN |
| | C5709 | F1H1H102B047 | 1000pF 50V | 1 | |
| | C5711 | F2B2E5610014 | 560uF 250V | 1 | |
| | C5712 | F2B2E5610014 | 560uF 250V | 1 | |
| | C5713 | F0C3A4720001 | 4700pF 1000V | 1 | |
| | C5720 | F1H1H101B052 | 100pF 50V | 1 | |
| | C5721 | F1H1H221B047 | 220pF 50V | 1 | |
| | C5722 | F1H1H102B047 | 1000pF 50V | 1 | |
| | C5723 | F1H1H471A219 | 470pF 50V | 1 | |
| | C5724 | F2A1H5600009 | 56uF 50V | 1 | |
| | C5725 | F1H1H104B047 | 0.1uF 50V | 1 | |
| | C5726 | F1H1H104B047 | 0.1uF 50V | 1 | |
| | C5728 | F1H1H102B047 | 1000pF 50V | 1 | |
| | C5730 | F1H1E105A153 | 1uF 25V | 1 | |
| | C5737 | F1B3D272A084 | 2700pF 2000V | 1 | |
| | C5790 | F1K2J2220002 | 2200pF 630V | 1 | |
| | C5794 | F1H1H102B047 | 1000pF 50V | 1 | |
| | C5795 | F1K1H105A251 | 1uF 50V | 1 | |
| | C5796 | F1H1H104B047 | 0.1uF 50V | 1 | |
| | C5798 | F2A1E221B422 | 220uF 25V | 1 | |
| | C5800 | D0GDR00J0004 | 0 1/8W | 1 | |
| | C5808 | F2A1H682C089 | 6800uF 50V | 1 | |
| | C5812 | F1H1H104B047 | 0.1uF 50V | 1 | |
| | C5813 | F2A1H331B416 | 330uF 50V | 1 | |
| | C5817 | F2A1HR10B411 | 0.10uF 50V | 1 | |
| | C5818 | F1H1H104B047 | 0.1uF 50V | 1 | |
| | C5826 | D0GDR00J0004 | 0 1/8W | 1 | |
| | C5832 | F1H1H104B047 | 0.1uF 50V | 1 | |
| | C5839 | F1K2J1030001 | 0.01uF 630V | 1 | |
| | C5842 | F1K2J1030001 | 0.01uF 630V | 1 | |

| Safety | Ref. No. | Part No. | Part Name & Description | Qty | Remarks |
|---|---|---|---|---|---|
| | C5895 | F1H1H104B047 | 0.1uF 50V | 1 | |
| | C5896 | F1H1H104B047 | 0.1uF 50V | 1 | |
| | C5897 | F1H1H103B047 | 0.01uF 50V | 1 | |
| | C5898 | F1H1H104B047 | 0.1uF 50V | 1 | |
| | C5899 | F2A1A221B161 | 220uF 10V | 1 | |
| | C5900 | F1J1A106A043 | 10uF 10V | 1 | |
| | C6002 | F1H1H104B047 | 0.1uF 50V | 1 | |
| | C6003 | F1H1H102B047 | 1000pF 50V | 1 | |
| | C6004 | F1H1H102B047 | 1000pF 50V | 1 | |
| | C6005 | F1H1H102B047 | 1000pF 50V | 1 | |
| | C6006 | F1H1H102B047 | 1000pF 50V | 1 | |
| | C6007 | F1H1H102B047 | 1000pF 50V | 1 | |
| | C6008 | F1H1H331B052 | 330pF 50V | 1 | |
| | C6009 | F1H1H102B047 | 1000pF 50V | 1 | |
| | C6010 | F1H1H331B052 | 330pF 50V | 1 | |
| | C6011 | F1H1H102A219 | 1000pF 50V | 1 | |
| | C6012 | F1H1H331B052 | 330pF 50V | 1 | |
| | C6013 | F1H1H102B047 | 1000pF 50V | 1 | |
| | C6014 | F1H1H102B047 | 1000pF 50V | 1 | |
| | C6015 | F1H1H102B047 | 1000pF 50V | 1 | |
| | C6016 | F1H1H102B047 | 1000pF 50V | 1 | |
| | C6017 | F1H1H103A219 | 0.01uF 50V | 1 | |
| | C6018 | F1H1H102B047 | 1000pF 50V | 1 | |
| | C6021 | F2A1E221B422 | 220uF 25V | 1 | |
| | C6022 | F1H1H472A219 | 4700pF 50V | 1 | |
| | C6023 | F2A1H470B412 | 47uF 50V | 1 | |
| | C6024 | F2A1C101A115 | 100uF 16V | 1 | |
| | C6025 | F1H1H104B047 | 0.1uF 50V | 1 | |
| | C6026 | F2A1H220B411 | 22uF 50V | 1 | |
| | C6101 | F1H1H101B052 | 100pF 50V | 1 | |
| | C6102 | F1H1H101B052 | 100pF 50V | 1 | |
| | C6201 | F1H1H101B052 | 100pF 50V | 1 | |
| | C6202 | F1H1H101B052 | 100pF 50V | 1 | |
| | C6317 | F1H1H104B047 | 0.1uF 50V | 1 | |
| | C6318 | F1H1H331B052 | 330pF 50V | 1 | |
| | C6319 | F1H1H331B052 | 330pF 50V | 1 | |
| | C6320 | F1H1H103B047 | 0.01uF 50V | 1 | |
| | C6321 | F1H1H103B047 | 0.01uF 50V | 1 | |
| | C6322 | F1H1H104B047 | 0.1uF 50V | 1 | |
| | C6323 | F1H1H391A889 | 390pF 50V | 1 | |
| | C6500 | F1H1H101B052 | 100pF 50V | 1 | |
| | C6501 | F1H1H102A219 | 1000pF 50V | 1 | |
| | C6502 | F2A1C330B453 | 33uF 16V | 1 | |
| | C8007 | F1H1A334A025 | 0.33uF 10V | 1 | |
| | C8008 | F1H1H223A219 | 0.022uF 50V | 1 | |
| | C8009 | F1H1H680A230 | 68pF 50V | 1 | |
| | C8010 | F1G1A1040006 | 0.1uF 10V | 1 | |
| | C8011 | F1H1C104A008 | 0.1uF 16V | 1 | |
| | C8012 | F1G1A1040006 | 0.1uF 10V | 1 | |
| | C8013 | F2A0J101A181 | 100uF 6.3V | 1 | |
| | C8014 | F1H1H103A885 | 0.01uF 50V | 1 | |
| | C8015 | F1G1H120A565 | 12pF 50V | 1 | |
| | C8016 | F1G1H120A565 | 12pF 50V | 1 | |
| | C8017 | F1J1A106A043 | 10uF 10V | 1 | |
| | C8018 | F1H1A334A028 | 0.33uF 10V | 1 | |
| | C8019 | F1H1H102A219 | 1000pF 50V | 1 | |
| | C8020 | F1H1H681B047 | 680pF 50V | 1 | |
| | C8021 | F1H1C823A178 | 0.082uF 16V | 1 | |
| | C8022 | F1H0J4750005 | 4.7uF 6.3V | 1 | |
| | C8027 | F1H1H102A219 | 1000pF 50V | 1 | |
| | C8028 | F1H1C104A008 | 0.1uF 16V | 1 | |
| | C8029 | F1G1A1040006 | 0.1uF 10V | 1 | |
| | C8031 | F1G1A1040006 | 0.1uF 10V | 1 | |
| | C8032 | F1H1C104A008 | 0.1uF 16V | 1 | |
| | C8033 | F1H1C104A008 | 0.1uF 16V | 1 | |
| | C8034 | F1H1C104A008 | 0.1uF 16V | 1 | |
| | C8035 | F1G1A1040006 | 0.1uF 10V | 1 | |
| | C8036 | F1G1A1040006 | 0.1uF 10V | 1 | |
| | C8037 | F1H1C104A008 | 0.1uF 16V | 1 | |
| | C8038 | F1H1C104A008 | 0.1uF 16V | 1 | |
| | C8039 | F1H1C104A008 | 0.1uF 16V | 1 | |
| | C8040 | F1G1A1040006 | 0.1uF 10V | 1 | |
| | C8041 | F1H1C104A008 | 0.1uF 16V | 1 | |

| Safety | Ref. No. | Part No. | Part Name & Description | Qty | Remarks |
|---|---|---|---|---|---|
| | C8042 | F1H1C104A008 | 0.1uF 16V | 1 | |
| | C8043 | F1H1C104A008 | 0.1uF 16V | 1 | |
| | C8044 | F1H0J4750005 | 4.7uF 6.3V | 1 | |
| | C8045 | F1G1A1040006 | 0.1uF 10V | 1 | |
| | C8046 | F1H1C104A008 | 0.1uF 16V | 1 | |
| | C8047 | F1H1H153A885 | 0.015uF 50V | 1 | |
| | C8048 | F1H1C104A008 | 0.1uF 16V | 1 | |
| | C8049 | F1J1A106A043 | 10uF 10V | 1 | |
| | C8050 | F1H1A105A025 | 1uF 10V | 1 | |
| | C8051 | F1H1A105A004 | 1uF 10V | 1 | |
| | C8052 | F1H1C104A120 | 0.1uF 16V | 1 | |
| | C8053 | F1H1C104A120 | 0.1uF 16V | 1 | |
| | C8054 | F1H1A105A004 | 1uF 10V | 1 | |
| | C8055 | F1H1C104A120 | 0.1uF 16V | 1 | |
| | C8056 | F1H1C104A120 | 0.1uF 16V | 1 | |
| | C8057 | F1H1H103A885 | 0.01uF 50V | 1 | |
| | C8058 | F1G1A1040006 | 0.1uF 10V | 1 | |
| | C8059 | F1G1A1040006 | 0.1uF 10V | 1 | |
| | C8060 | F1H1A105A025 | 1uF 10V | 1 | |
| | C8061 | F1G1A1040006 | 0.1uF 10V | 1 | |
| | C8064 | F1J1A106A043 | 10uF 10V | 1 | |
| | C8065 | F1J1A106A043 | 10uF 10V | 1 | |
| | C8067 | F1J1A106A043 | 10uF 10V | 1 | |
| | C8068 | F1H1H332B047 | 3300pF 50V | 1 | |
| | C8069 | F1H1H332B047 | 3300pF 50V | 1 | |
| | C8070 | F1J1A106A043 | 10uF 10V | 1 | |
| | C8075 | F1J1A106A043 | 10uF 10V | 1 | |
| | C8076 | F1J1A106A043 | 10uF 10V | 1 | |
| | C8077 | F1H1C104A120 | 0.1uF 16V | 1 | |
| | C8078 | F1J1A106A043 | 10uF 10V | 1 | |
| | C8079 | F1H1C104A008 | 0.1uF 16V | 1 | |
| | C8201 | F1J1A106A043 | 10uF 10V | 1 | |
| | C8202 | F1H1C104A008 | 0.1uF 16V | 1 | |
| | C8203 | F1H1H103A885 | 0.01uF 50V | 1 | |
| | C8204 | F1J1A106A043 | 10uF 10V | 1 | |
| | C8251 | F1J1A106A043 | 10uF 10V | 1 | |
| | C8252 | F1H1H103A885 | 0.01uF 50V | 1 | |
| | C8253 | F1H1A154A107 | 0.15uF 10V | 1 | |
| | C8254 | F1H1H153A885 | 0.015uF 50V | 1 | |
| | C8255 | F1H1H182A219 | 1800pF 50V | 1 | |
| | C8256 | F1H1H102A219 | 1000pF 50V | 1 | |
| | C8258 | F1H1H122A219 | 1200pF 50V | 1 | |
| | C8259 | F1J1A106A043 | 10uF 10V | 1 | |
| | C8260 | F1H1H103A885 | 0.01uF 50V | 1 | |
| | C8261 | F1H1A105A025 | 1uF 10V | 1 | |
| | C8262 | F2A1A101B138 | 100uF 10V | 1 | |
| | C8263 | D0GBR00J0004 | 0 1/10W | 1 | |
| | C8401 | F1J1A106A043 | 10uF 10V | 1 | |
| | C8402 | F2A0J101A181 | 100uF 6.3V | 1 | |
| | C8403 | F1H1H103A885 | 0.01uF 50V | 1 | |
| | C8501 | F1J1A106A043 | 10uF 10V | 1 | |
| | C8502 | F1H1A105A025 | 1uF 10V | 1 | |
| | C8503 | F1H1A105A025 | 1uF 10V | 1 | |
| | C8504 | F1G1A1040006 | 0.1uF 10V | 1 | |
| | C8505 | F1G1A1040006 | 0.1uF 10V | 1 | |
| | C8506 | F1G1A1040006 | 0.1uF 10V | 1 | |
| | C8507 | F1G1A1040006 | 0.1uF 10V | 1 | |
| | C8508 | F1G1A1040006 | 0.1uF 10V | 1 | |
| | C8509 | F1G1A1040006 | 0.1uF 10V | 1 | |
| | C8510 | F1G1A1040006 | 0.1uF 10V | 1 | |
| | C8511 | F1G1A1040006 | 0.1uF 10V | 1 | |
| | C8512 | F1G1A1040006 | 0.1uF 10V | 1 | |
| | C8513 | F1H0J4750005 | 4.7uF 6.3V | 1 | |
| | C8514 | F1H0J4750005 | 4.7uF 6.3V | 1 | |