PSG1503007CE

Service Manual

CD Stereo System

Model No. SA-AKX600PN
SA-AKX600PS
SA-AKX800PN
SA-AKX800PS

This illustration shows SC-AKX800.

Product Color: (K)...Black Type

Please refer to the original service manual for:
- **CD Mechanism Unit (BRS12C) , Order No. PSG1303059AE**
- **Speaker system SB-AKX800PNK, SB-AKW800PNK Order No. PSG1503010CE**

⚠ WARNING

This service information is designed for experienced repair technicians only and is not designed for use by the general public.
It does not contain warnings or cautions to advise non-technical individuals of potential dangers in attempting to service a product.
Products powered by electricity should be serviced or repaired only by experienced professional technicians. Any attempt to service or repair the product or products dealt with in this service information by anyone else could result in serious injury or death.

IMPORTANT SAFETY NOTICE

There are special components used in this equipment which are important for safety. These parts are marked by ⚠ in the Schematic Diagrams, Circuit Board Diagrams, Exploded Views and Replacement Parts List. It is essential that these critical parts should be replaced with manufacturer's specified parts to prevent shock, fire or other hazards. Do not modify the original design without permission of manufacturer.

TABLE OF CONTENTS

PAGE

1 Safety Precautions ---------- 3
- 1.1. General Guidelines ---------- 3
- 1.2. Before Repair and Adjustment ---------- 4
- 1.3. Protection Circuitry ---------- 4
- 1.4. Power Supply using SMPS Module ---------- 5
- 1.5. Safety Parts Information ---------- 6

2 Warning ---------- 7
- 2.1. Prevention of Electrostatic Discharge (ESD) to Electrostatically Sensitive (ES) Devices ---------- 7
- 2.2. Precaution of Laser Diode ---------- 7
- 2.3. General description about Lead Free Solder (PbF) ---------- 8
- 2.4. Handling Precautions for Traverse Unit ---------- 8
- 2.5. Grounding for electrostatic breakdown prevention ---------- 9

3 Service Navigation ---------- 10
- 3.1. Service Information ---------- 10

PAGE

4 Specifications ---------- 11

5 Location of Controls and Components ---------- 12
- 5.1. Remote Control Key Button Operation ---------- 12
- 5.2. Main Unit Key Button Operation ---------- 13

6 Service Mode ---------- 14
- 6.1. Cold-Start ---------- 14
- 6.2. Sales Demonstration Lock Function ---------- 14
- 6.3. Doctor Mode Table ---------- 15
- 6.4. Self-Diagnostic Mode ---------- 17
- 6.5. Self-Diagnostic Error Code Table ---------- 17

7 Troubleshooting Guide ---------- 19

8 Disassembly and Assembly Instructions ---------- 20
- 8.1. Types of Screws ---------- 20
- 8.2. Disassembly Flow Chart ---------- 21
- 8.3. Main Components and P.C.B. Locations ---------- 21
- 8.4. Disassembly of Top Cabinet ---------- 22
- 8.5. Disassembly of Front Panel Unit ---------- 22

Panasonic®

© Panasonic Corporation 2015. All rights reserved. Unauthorized copying and distribution is a violation of law.

8.6. Disassembly of Panel P.C.B. ---------- 23
8.7. Disassembly of USB P.C.B. ---------- 24
8.8. Disassembly of Music Port P.C.B. ---------- 24
8.9. Disassembly of Rear Panel ---------- 24
8.10. Disassembly of Main P.C.B. ---------- 25
8.11. Disassembly of SMPS Module ---------- 26
8.12. Disassembly of Tuner P.C.B. ---------- 26
8.13. Disassembly of CD Mechanism Unit ---------- 27
8.14. Disassembly of CD Interface P.C.B. ---------- 28
9 Service Position ---------- 29
9.1. Checking of Panel P.C.B. ---------- 29
9.2. Checking of Main P.C.B. and SMPS Module ---------- 29
10 Block Diagram ---------- 31
10.1. System Control ---------- 31
10.2. Audio ---------- 34
10.3. Power Supply ---------- 36
11 Wiring Connection Diagram ---------- 38
12 Schematic Diagram ---------- 39
12.1. Schematic Diagram Notes ---------- 39
12.2. Main (CD Motor Driver) Circuit ---------- 41
12.3. Main (USB EMMC) Circuit ---------- 42
12.4. Main (SOC IO Expander) Circuit (1/2) ---------- 43
12.5. Main (SOC IO Expander) Circuit (2/2) ---------- 44
12.6. Main (Damp) Circuit (1/2) ---------- 45
12.7. Main (Damp) Circuit (2/2) ---------- 46
12.8. Main (Connector) Circuit ---------- 47
12.9. Main (DSP) Circuit ---------- 48
12.10. Main (VREG Fan) Circuit (1/2) ---------- 49
12.11. Main (VREG Fan) Circuit (2/2) ---------- 50
12.12. Tuner Circuit ---------- 51
12.13. Panel Circuit ---------- 52
12.14. USB, CD Interface and Music Port Circuit ---------- 53
13 Printed Circuit Board ---------- 54
13.1. Main P.C.B. (Side A) ---------- 54
13.2. Main P.C.B. (Side B) ---------- 55
13.3. Tuner and CD Interface P.C.B. ---------- 56
13.4. Panel, USB and Music Port P.C.B. ---------- 57
14 Voltage and Waveform Measurement ---------- 59
14.1. Voltage Measurement ---------- 59
14.2. Waveform Chart ---------- 62
15 Exploded View and Replacement Parts List ---------- 63
15.1. Cabinet Parts Location 1 ---------- 63
15.2. Cabinet Parts Location 2 ---------- 64
15.3. Packaging (For SC-AKX600PN/PS) ---------- 65
15.4. Packaging (For SC-AKX800PN/PS) ---------- 66
15.5. Mechanical Replacement Part List ---------- 67
15.6. Electrical Replacement Parts List ---------- 69

1 Safety Precautions

1.1. General Guidelines

1. **IMPORTANT SAFETY NOTICE**
   There are special components used in this equipment which are important for safety. These parts are marked by ⚠ in the Schematic Diagrams, Circuit Board Layout, Exploded Views and Replacement Parts List. It is essential that these critical parts should be replaced with manufacturer's specified parts to prevent X-RADIATION, shock, fire, or other hazards. Do not modify the original design without permission of manufacturer.
2. An Isolation Transformer should always be used during the servicing of AC Adaptor whose chassis is not isolated from the AC power line. Use a transformer of adequate power rating as this protects the technician from accidents resulting in personal injury from electrical shocks. It will also protect AC Adaptor from being damaged by accidental shorting that may occur during servicing.
3. When servicing, observe the original lead dress. If a short circuit is found, replace all parts which have been overheated or damaged by the short circuit.
4. After servicing, see to it that all the protective devices such as insulation barriers, insulation papers shields are properly installed.
5. After servicing, make the following leakage current checks to prevent the customer from being exposed to shock hazards.

1.1.1. Leakage Current Cold Check

1. Unplug the AC cord and connect a jumper between the two prongs on the plug.
2. Measure the resistance value, with an ohmmeter, between the jumpered AC plug and each exposed metallic cabinet part on the equipment such as screwheads, connectors, control shafts, etc. When the exposed metallic part has a return path to the chassis, the reading should be between 1MΩ and 5.2MΩ.
   When the exposed metal does not have a return path to the chassis, the reading must be ∞

1.1.2. Leakage Current Hot Check

1. Plug the AC cord directly into the AC outlet. Do not use an isolation transformer for this check.
2. Connect a 1.5kΩ, 10 watts resistor, in parallel with a 0.15μF capacitors, between each exposed metallic part on the set and a good earth ground such as a water pipe, as shown in Figure 1-1.
3. Use an AC voltmeter, with 1000 ohms/volt or more sensitivity, to measure the potential across the resistor.
4. Check each exposed metallic part, and measure the voltage at each point.
5. Reverse the AC plug in the AC outlet and repeat each of the above measurements.
6. The potential at any point should not exceed 0.75 volts RMS. A leakage current tester (Simpson Model 229 or equivalent) may be used to make the hot checks, leakage current must not exceed 1/2 milliamp. In case a measurement is outside of the limits specified, there is a possibility of a shock hazard, and the equipment should be repaired and rechecked before it is returned to the customer.

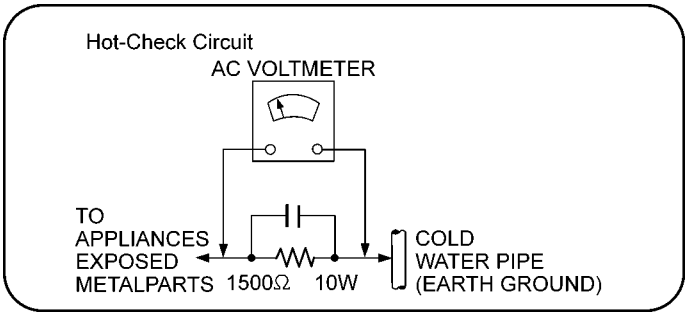

Figure 1-1

1.2. Before Repair and Adjustment

Disconnect AC power to discharge AC capacitor (in SMPS Module) as indicate below diagram through a 10 Ω, 10 W resistor to ground.

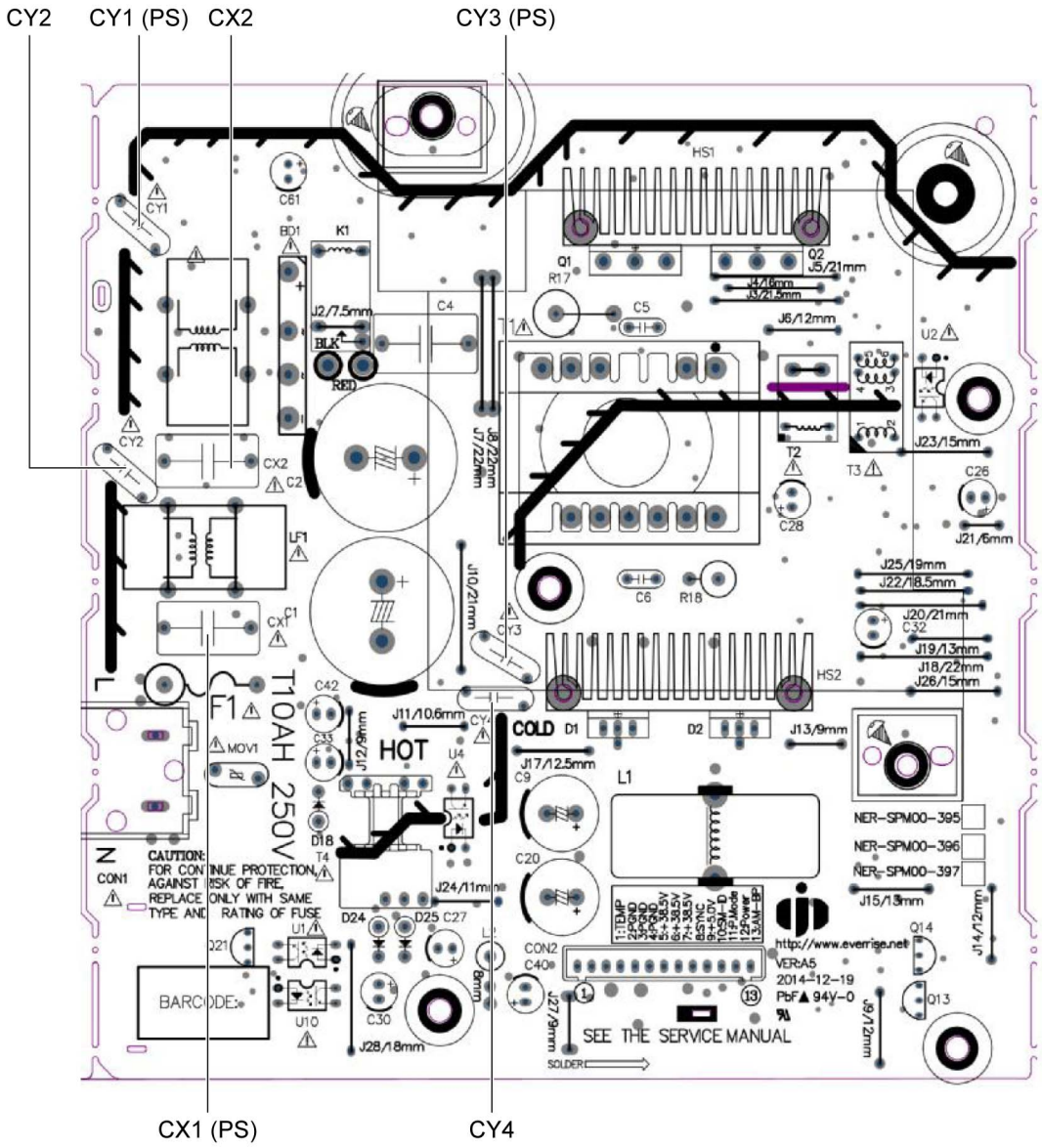

Figure 1-2

Caution:

DO NOT SHORT-CIRCUIT DIRECTLY (with a screwdriver blade, for instance), as this may destroy solid state devices.

After repairs are completed, restore power gradually using a variac to avoid overcurrent.

Current consumption at AC 120 V, 60 Hz in Power ON, FM Tuner at volume minimal mode should be ~ 750 mA (PN).

Current consumption at AC 220~240 V, 50/60 Hz in Power ON, FM Tuner at volume minimal mode should be ~ 750 mA (PS).

1.3. Protection Circuitry

The protection circuitry may have operated if either of the following conditions are noticed:

- No sound is heard when the power is turned on.
- Sound stops during a performance.

The function of this circuitry is to prevent circuitry damage if, for example, the positive and negative speaker connection wires are “shorted”, or if speaker systems with an impedance less than the indicated rated impedance of the amplifier are used.

If this occurs, follow the procedure outlines below:

1. Turn off the power.
2. Determine the cause of the problem and correct it.
3. Turn on the power once again after one minute.

Note:

When the protection circuitry functions, the unit will not operate unless the power is first turned off and then on again.

1.4. Power Supply using SMPS Module

This model uses Switching Mode Power Supply (SMPS Module) to provide the power supply to the unit. Here is the supplied part no. for the Module

1) N0AB2GP00003 (PN)
2) N0AC2GP00004 (PS)

1.4.1. Method to Identify the Correct SMPS Module

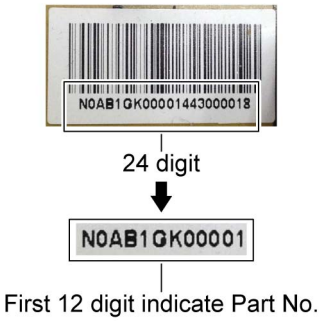

Figure 1-3

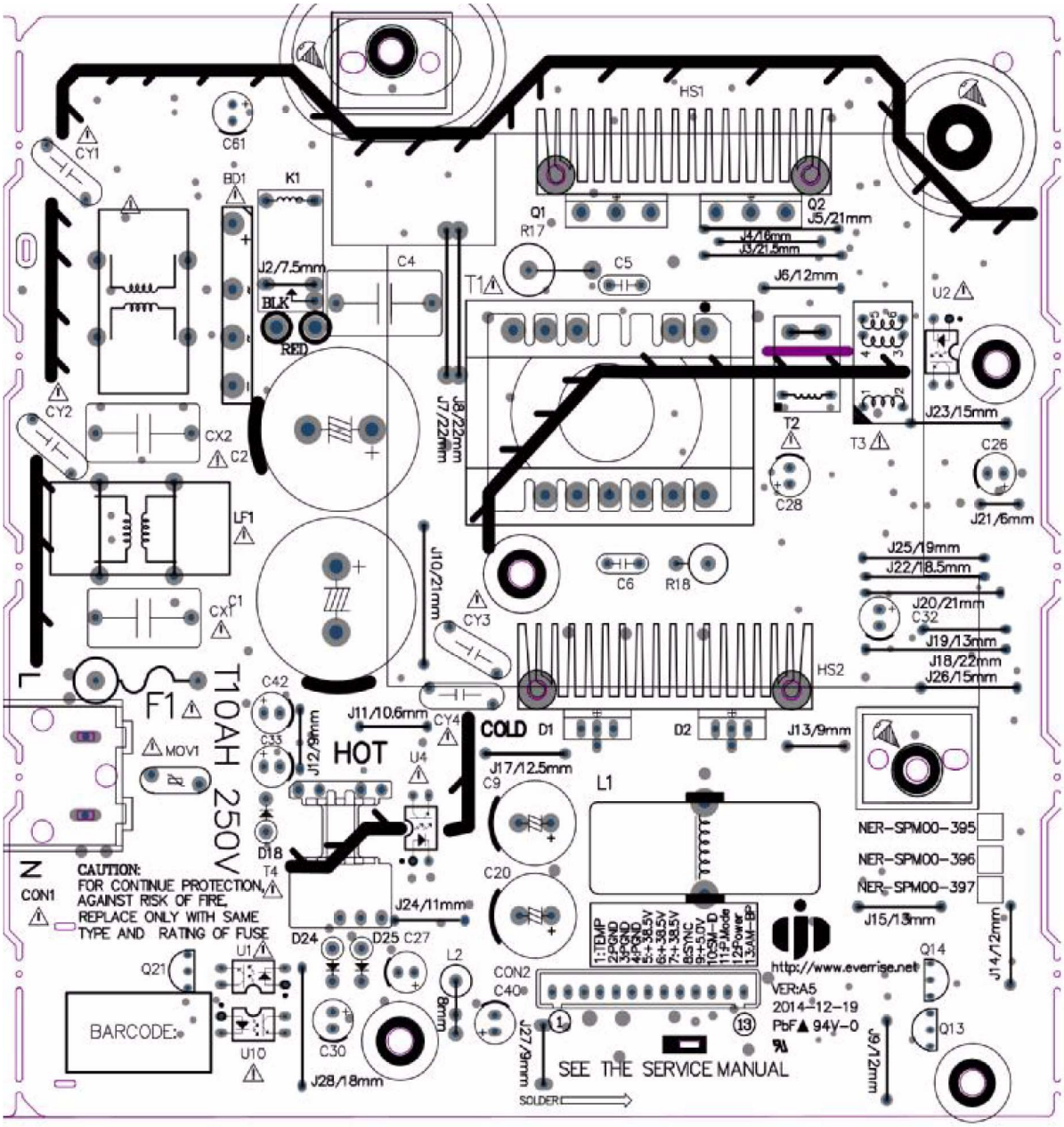

Figure 1-4

1.5. Safety Parts Information

Safety Parts List:

There are special components used in this equipment which are important for safety.

These parts are marked by ⚠ in the Schematic Diagrams, Exploded View & Replacement Parts List. It is essential that these critical parts should be replaced with manufacturer's specified parts to prevent shock, fire or other hazards. Do not modify the original design without permission of manufacturer.

Safety	Ref No.	Part No.	Part Name & Description	Remarks
⚠	12	RGR0473B-AA	REAR PANEL	AKX600PN
⚠	12	RGR0473B-BA	REAR PANEL	AKX600PS
⚠	12	RGR0473C-AA	REAR PANEL	AKX800PN
⚠	12	RGR0473C-BA	REAR PANEL	AKX800PS
⚠	20	RKM0765-K	TOP CABINET	
⚠	301	RAE1047Z-V	TRAVERSE UNIT	(E.S.D)
⚠	A2	K2CB2CB00022	AC CORD	PN
⚠	A2	K2CQ2YY00119	AC CORD	PS
⚠	A3	RQT9970-M	O/I BOOK (Sp)	
⚠	A3	RQT9974-B	O/I BOOK (En)	
⚠	PCB7	N0AB2GP00003	SMPS MODULE	PN
⚠	PCB7	N0AC2GP00004	SMPS MODULE	PS

2 Warning

2.1. Prevention of Electrostatic Discharge (ESD) to Electrostatically Sensitive (ES) Devices

Some semiconductor (solid state) devices can be damaged easily by static electricity. Such components commonly are called Electrostatically Sensitive (ES) Devices.

Examples of typical ES devices are IC (integrated circuits) and some field-effect transistors and semiconductor "chip" components.

The following techniques should be used to help reduce the incidence of component damage caused by electrostatic discharge (ESD).

1. Immediately before handling any semiconductor component or semiconductor-equipped assembly, drain off any ESD on your body by touching a known earth ground. Alternatively, obtain and wear a commercially available discharging ESD wrist strap, which should be removed for potential shock reasons prior to applying power to the unit under test.
2. After removing an electrical assembly equipped with ES devices, place the assembly on a conductive surface such as aluminum foil, to prevent electrostatic charge buildup or exposure of the assembly.
3. Use only a grounded-tip soldering iron to solder or unsolder ES devices.
4. Use only an anti-static solder removal device. Some solder removal devices not classified as “anti-static (ESD protected)” can generate electrical charge sufficient to damage ES devices.
5. Do not use freon-propelled chemicals. These can generate electrical charges sufficient to damage ES devices.
6. Do not remove a replacement ES device from its protective package until immediately before you are ready to install it. (Most replacement ES devices are packaged with leads electrically shorted together by conductive foam, aluminum foil or comparable conductive material).
7. Immediately before removing the protective material from the leads of a replacement ES device, touch the protective material to the chassis or circuit assembly into which the device will be installed.
   CAUTION:
   Be sure no power is applied to the chassis or circuit, and observe all other safety precautions.
8. Minimize bodily motions when handling unpackaged replacement ES devices. (Otherwise harmless motion such as the brushing together of your clothes fabric or the lifting of your foot from a carpeted floor can generate static electricity (ESD) sufficient to damage an ES device).

IMPORTANT SAFETY NOTICE

There are special components used in this equipment which are important for safety. These parts are marked by ⚠ in the Schematic Diagrams, Circuit Board Diagrams, Exploded Views and Replacement Parts List. It is essential that these critical parts should be replaced with manufacturer's specified parts to prevent shock, fire or other hazards. Do not modify the original design without permission of manufacturer.

2.2. Precaution of Laser Diode

CAUTION:
THIS PRODUCT UTILIZES A LASER.
USE OF CONTROLS OR ADJUSTMENTS OR PERFORMANCE OF PROCEDURES OTHER THAN THOSE SPECIFIED HEREIN MAY RESULT IN HAZARDOUS RADIATION EXPOSURE.

Caution:

This product utilizes a laser diode with the unit turned “on”, invisible laser radiation is emitted from the pickup lens.
Wavelength: 790 nm (CD)
Maximum output radiation power from pickup: 100 μW/VDE
Laser radiation from the pickup unit is safety level, but be sure the followings:

1. Do not disassemble the pickup unit, since radiation from exposed laser diode is dangerous.
2. Do not adjust the variable resistor on the pickup unit. It was already adjusted.
3. Do not look at the focus lens using optical instruments.
4. Recommend not to look at pickup lens for a long time.

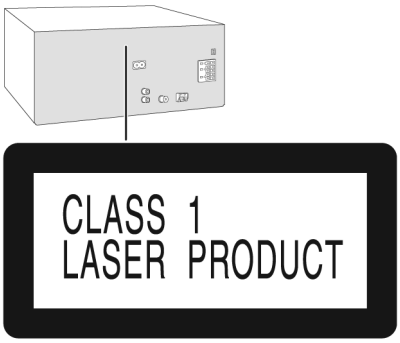

Figure 2-1

2.3. General description about Lead Free Solder (PbF)

The lead free solder has been used in the mounting process of all electrical components on the printed circuit boards used for this equipment in considering the globally environmental conservation.

The normal solder is the alloy of tin (Sn) and lead (Pb). On the other hand, the lead free solder is the alloy mainly consists of tin (Sn), silver (Ag) and Copper (Cu), and the melting point of the lead free solder is higher approx.30 degrees C (86°F) more than that of the normal solder.

Definition of PCB Lead Free Solder being used

The letter of “PbF” is printed either foil side or components side on the PCB using the lead free solder. (See right figure)	PbF

Service caution for repair work using Lead Free Solder (PbF)

- The lead free solder has to be used when repairing the equipment for which the lead free solder is used.
  (Definition: The letter of “PbF” is printed on the PCB using the lead free solder.)
- To put lead free solder, it should be well molten and mixed with the original lead free solder.
- Remove the remaining lead free solder on the PCB cleanly for soldering of the new IC.
- Since the melting point of the lead free solder is higher than that of the normal lead solder, it takes the longer time to melt the lead free solder.
- Use the soldering iron (more than 70W) equipped with the temperature control after setting the temperature at 350±30 degrees C (662±86°F).

Recommended Lead Free Solder (Service Parts Route.)

- The following 3 types of lead free solder are available through the service parts route.
  RFKZ03D01K----------(0.3mm 100g Reel)
  RFKZ06D01K----------(0.6mm 100g Reel)
  RFKZ10D01K----------(1.0mm 100g Reel)

Note

* Ingredient: tin (Sn), 96.5%, silver (Ag) 3.0%, Copper (Cu) 0.5%, Cobalt (Co) / Germanium (Ge) 0.1 to 0.3%

2.4. Handling Precautions for Traverse Unit

The laser diode in the optical pickup unit may break down due to static electricity of clothes or human body. Special care must be taken avoid caution to electrostatic breakdown when servicing and handling the laser diode in the traverse unit.

2.4.1. Cautions to Be Taken in Handling the Optical Pickup Unit

The laser diode in the optical pickup unit may be damaged due to electrostatic discharge generating from clothes or human body. Special care must be taken avoid caution to electrostatic discharge damage when servicing the laser diode.

1. Do not give a considerable shock to the optical pickup unit as it has an extremely high-precise structure.
2. To prevent the laser diode from the electrostatic discharge damage, the flexible cable of the optical pickup unit removed should be short-circuited with a short pin or a clip.
3. The flexible cable may be cut off if an excessive force is applied to it. Use caution when handling the flexible cable.
4. The antistatic FFC is connected to the new optical pickup unit. After replacing the optical pickup unit and connecting the flexi-

ble cable, cut off the antistatic FFC.

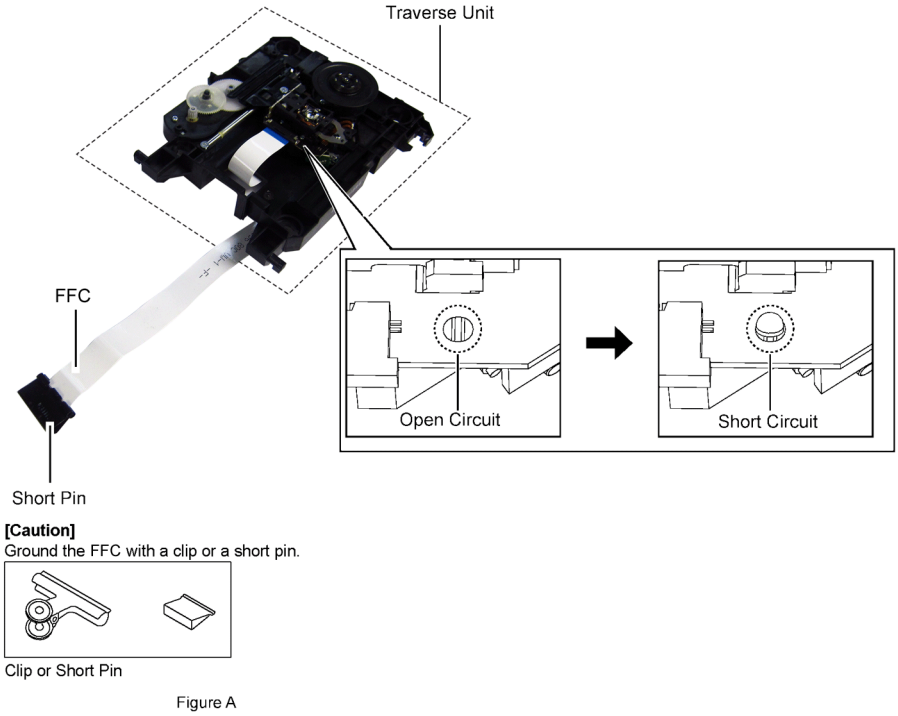

Figure 2-2

2.5. Grounding for electrostatic breakdown prevention

- As for parts that use optical pick-up (laser diode), the optical pick-up is destroyed by the static electricity of the working environment.
  Repair in the working environment that is grounded.

2.5.1. Worktable grounding

- Put a conductive material (sheet) or iron sheet on the area where the optical pickup is placed and ground the sheet.

2.5.2. Human body grounding

- Use the anti-static wrist strap to discharge the static electricity form your body (Figure 2-3).

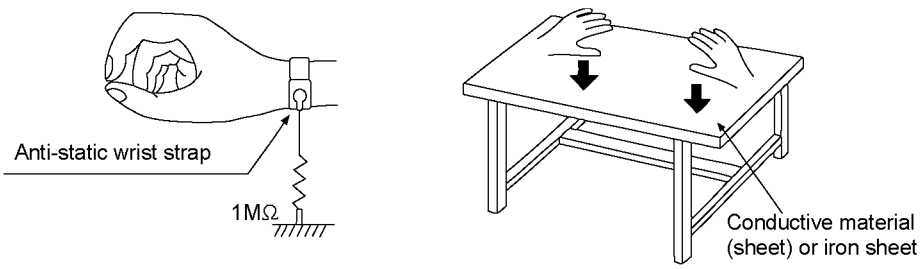

Figure 2-3

3 Service Navigation

3.1. Service Information

This service manual contains technical information which will allow service personnel's to understand and service this model.
Please place orders using the parts list and not the drawing reference numbers.
If the circuit is changed or modified, this information will be followed by supplement service manual to be filed with original service manual.

3.1.1. Software Update Procedure

UPDATE PROCEDURE

Perform the following steps.
● Step 1: Preparing USB device
● Step 2: Software Update

Step 1: Preparing USB device

Before start creating the update USB, it is nessesary to check the update file.
It is important to use the correct file otherwise USB version up process will not working.

Note: Please do not rename the file as the updating process will look for above naming. If different name, version up process will not work.

To create USB update, copy the desired FRM file (depends on model) into USB device.
Please make sure there is no other files inside the USB device.

Step 2: Software Update

<Caution>
► During the update process, do not disconnect the AC power supply cord.
► Do not press any buttons, except as instructed. Failure to do so may result in the set becoming unresponsive which will require repair.

Step:
► Set need to be turn ON in order to support USB update process.
► Go to USB selector until the display show "NODEVICE".
1. Insert USB device (With FRM file inside)
2. During the update process, the below message will shown on the display.

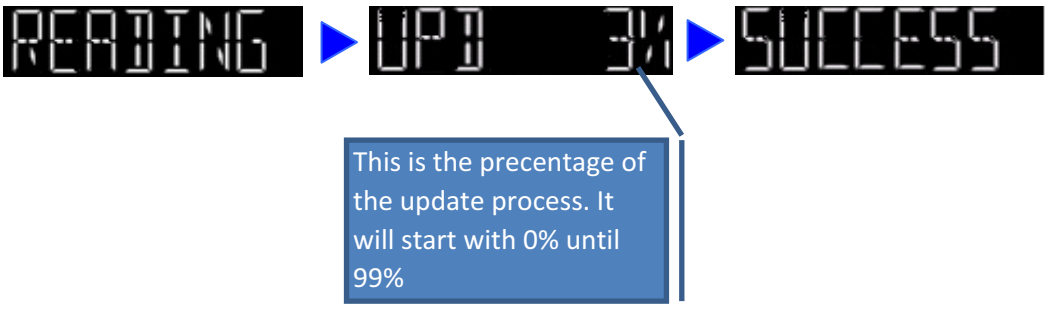

3. When "SUCCESS" display appear, unplug USB then ac out supply. Firmware updation process completed.

4 Specifications

■ Amplifier section

RMS output power stereo mode

Front Hi	340 W per channel (3 Ω), 1 kHz, 30% THD (for AKX600) 295 W per channel (3 Ω), 1 kHz, 30% THD (for AKX800)
Front Lo	460 W per channel (2 Ω), 100 Hz, 30% THD (for AKX600) 470 W per channel (2 Ω), 100 Hz, 30% THD (for AKX800)
Subwoofer Ch (for AKX800)	470 W per channel (2 Ω), 100 Hz, 30% THD
Total RMS stereo mode power	1600 W (for AKX600) 2000 W (for AKX800)

■ Tuner, terminals section

Preset memory	FM 30 stations AM 15 stations
Frequency modulation (FM)	
Frequency range	87.5 MHz to 108.0 MHz (100 kHz step) (for PN) 87.9 MHz to 107.9 MHz (200 kHz step) (for PN) 87.50 MHz to 108.00 MHz (50 kHz step) (for PS)
Antenna terminals	75 Ω (unbalanced)
Amplitude modulation (AM)	
Frequency range	520 kHz to 1710 kHz (10 kHz step) (for PN) 522 kHz to 1629 kHz (9 kHz step) (for PS) 520 kHz to 1630 kHz (10 kHz step) (for PS)
AUX 1	
Audio input	Pin jack (1 system)
AUX 2	
Sensitivity	100 mV, 4.7 k Ω

■ Disc section

Discs played (8 cm or 12 cm)	CD, CD-R/RW (CD-DA, MP3*)

* MPEG-1 Layer 3

Pick up	
Wavelength	790 nm (CD)

■ USB section

USB Port	
USB standard	USB 2.0 full speed
Media file format support	MP3 (*.mp3)
USB device file system	FAT12, FAT16, FAT32
USB recording	
Bit rate	128 kbps
USB recording speed	1x, 3x (CD only)
Recording file format	MP3 (*.mp3)

■ Internal memory section

Memory	
Memory size	2 GB
Media file format support	MP3 (*.mp3)
Memory recording	
Bit rate	128 kbps
Memory recording speed	1x, 3x (CD only)
Recording file format	MP3 (*. Mp3)

■ Bluetooth® section

Version	Bluetooth® Ver.2.1 + EDR
Class	Class 2
Supported profiles	A2DP, AVRCP, SPP OPP, FTP
Operating frequency	2.4 GHz band, FH-SS
Operating distance	10 m line of sight

■ General

Power supply	AC 120 V, 60 Hz (for PN) AC 220 to 240 V, 50/60 Hz (for PS)
Power consumption	173 W
Dimensions (W x H x D)	348 mm x 192 mm x 303 mm
Mass	3.6 kg
Operating temperature range	0 °C to +40 °C
Operating humidity range	35% to 80% RH (no condensation)
Power Consumption in standby mode (approximate)	0.3 W (for PN) 0.4 W (for PS)
Power Consumption in standby mode (approximate) (With "BLUETOOTH STANDBY" set to "ON")	0.4 W (for PN) 0.6 W (for PS)

Note:

1. Specifications are subject to change without notice. Mass and dimension are appropriate
2. Total harmonic distortion is measured by the digital spectrum analyzer.

■ System: SC-AKX600PNK

Main Unit: SA-AKX600PNK
Speakers: SB-AKX800PNK

■ System: SC-AKX600PSK

Main Unit: SA-AKX600PSK
Speakers: SB-AKX800PNK

■ System: SC-AKX800PNK

Main Unit: SA-AKX800PNK
Speakers: SB-AKX800PNK
Subwoofer: SB-AKW800PNK

■ System: SC-AKX800PSK

Main Unit: SA-AKX800PSK
Speakers: SB-AKX800PNK
Subwoofer: SB-AKW800PNK

5 Location of Controls and Components

5.1. Remote Control Key Button Operation

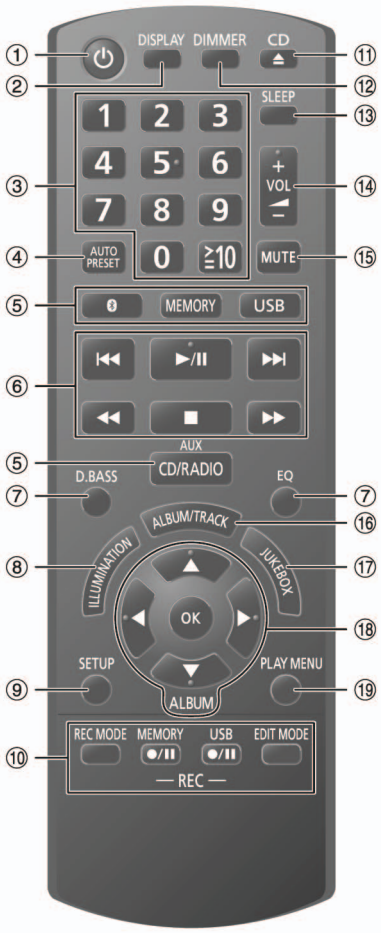

① **Standby/on switch [⏻], [⏻/I]**
Press to switch the unit from on to standby mode or vice versa. In standby mode, the unit is still consuming a small amount of power.

② View the content information

③ **Numeric buttons**
To select a 2-digit number
Example: 16: [≧10]→[1]→[6]

④ Auto preset the radio station

⑤ **Select the audio source**
On the main unit:
To start Bluetooth® pairing, press and hold [–PAIRING].

⑥ Basic playback control

⑦ Select the sound effects

⑧ Select the illumination effects

⑨ View the setup menu

⑩ Recording operation control

⑪ Open or close the disc tray

⑫ **Decrease the brightness of the display panel**
To cancel, press the button again.

⑬ Set the sleep timer

⑭ Adjust the volume level

⑮ **Mute the sound**
To cancel, press the button again.
"MUTE" is also canceled when you adjust the volume or when you switch off the system.

⑯ Select MP3 album or track

⑰ Select DJ jukebox

⑱ Select or confirm the option

⑲ View the play menu

5.2. Main Unit Key Button Operation

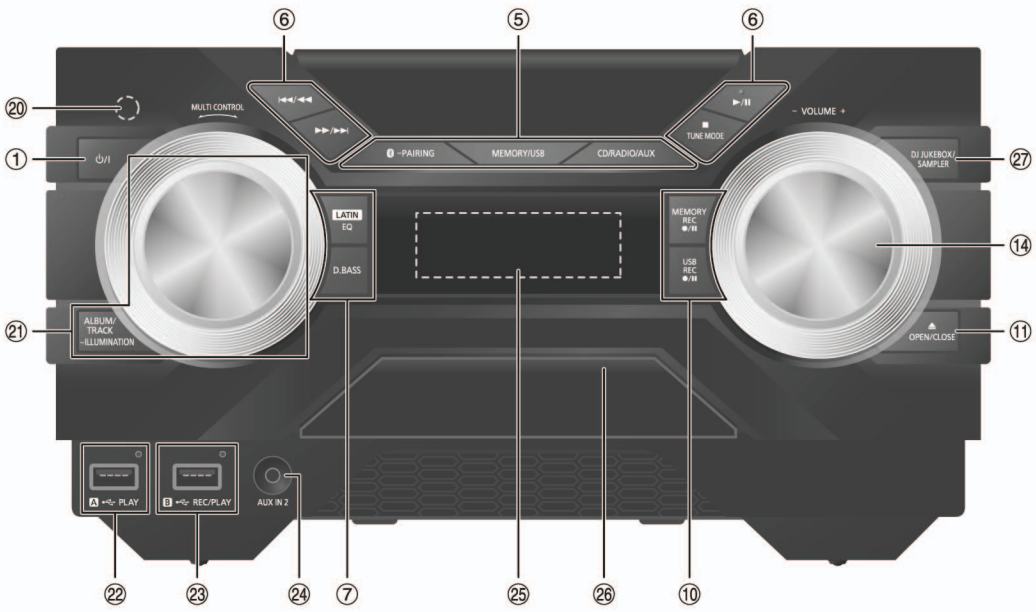

① **Standby/on switch [⏻], [⏻/I]**
Press to switch the unit from on to standby mode or vice versa. In standby mode, the unit is still consuming a small amount of power.

⑤ **Select the audio source**
On the main unit:
To start Bluetooth® pairing, press and hold [–PAIRING].

⑥ Basic playback control

⑦ Select the sound effects

⑩ Recording operation control

⑪ Open or close the disc tray

⑭ Adjust the volume level

⑳ **Remote control sensor**
Distance: Within approximately 7 m
Angle: Approximately 20° up and down, 30° left and right

㉑ **Select MP3 album or track**
Press [ALBUM/TRACK] to select album or track.
Browse tracks or albums
Turn [MULTI CONTROL] to browse.
To start playback from the selection, press [▶/II].
Select the illumination effects
Press and hold [–ILLUMINATION] and then turn [MULTI CONTROL] to select the setting.

㉒ **USB A**
USB port (•⭠)
USB status indicator
Play MP3 tracks.

㉓ **USB B**
USB port (•⭠)
USB status indicator
Play MP3 tracks.
Record sound or music tracks.

㉔ AUX IN 2 jack

㉕ Display panel

㉖ Disc tray

㉗ Select the DJ functions

6 Service Mode

6.1. Cold-Start

Item		FL Display	Key Operation
Mode Name	Description		Front Key
Cold Start	To carry out cold-start or initialize to shipping mode	- - - - - - - -	1. Unplug AC power cord. 2. Press & hold [POWER] button. 3. Plug in AC power cord while [POWER] button being pressed. 4. Release [POWER] button.

6.2. Sales Demonstration Lock Function

Item		FL Display	Key Operation
Mode Name	Description		Front Key
Entering into Sales Demonstration Lock Mode	To enter into sales demonstration lock mode.	-- -- LOCK -- --	1. Turn on the unit. 2. Select to any mode function. 3. Press and hold [⏏OPEN/CLOSE] and [CD/RADIO/AUX] keys for 5 sec or more. The display will show upon entering into this mode for 2 sec. Note: [⏏OPEN/CLOSE] button is invalid and the main unit displays "LOCKED" while the lock function mode is entered.
Cancellation of Sales Demonstration Lock Mode	To cancel sales demonstration lock mode.	-- UNLOCK --	1. Turn on the unit. 2. Select to CD mode function. 3. Set volume to Vol 19. 4. Press and hold [⏏OPEN/CLOSE] and [CD/RADIO/AUX] keys for 5 sec or more. The display will show upon entering into this mode for 2 sec.

6.3. Doctor Mode Table

6.3.1. Doctor Mode Table 1

Item		FL Display	Key Operation
Mode Name	Description		Front Key
Doctor Mode	To enter into Doctor Mode	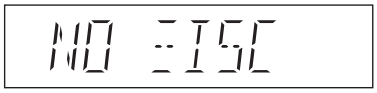	In CD Mode: 1. Press [■] button on main unit follow by [4] and [7] on remote control. 2. To exit, press [DELETE] button on remote control or, press [POWER,⏻/I] button on Main Unit
EEPROM checksum check	Displaying of 1. Year Develop. 2. Model Type. 3. ROM Type. 4. Firmware Version.	(Display 1) (For AKX600) 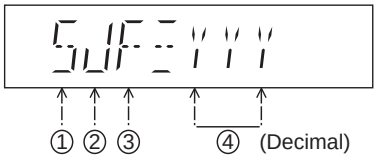 ① ② ③ ④ (Decimal) (Display 2) (For AKX800) 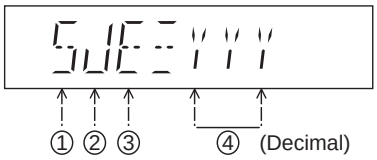 ① ② ③ ④ (Decimal) Version No. (001 ~ 999) → specific for each firmware	In CD mode: 1. Enter into Doctor Mode
Cold Start	To active cold start upon next AC power up when reset start is execute the next time.	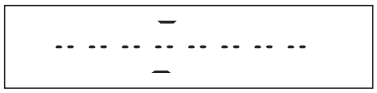	In Doctor Mode: 1. Press [4] button on the remote control.

6.3.2. Doctor Mode Table 2

Item		FL Display	Key Operation
Mode Name	Description		Front Key
Volume Setting Check	To check volume setting of the main unit.	VOL 50 Volume Press [7]: VOL50 Press [8]: VOL35 Press [9]: VOL0	In Doctor Mode: 1. Press [7], [8], [9] button on the remote control.
FL Display Check	To check FL segment display. All segments will light up while all LED blink at 0.5s intervals.	M.EQ D.BASS TAG MONO ST RDS AUTO OFF MEMORY USB REC MP3 ALL 1-ALB 1-TR RND PGM SLEEP REC PLAY	In Doctor mode: 1. Press [1] button on the remote control. 2. To cancel this mode, press [0] button on the remote control.
Traverse Test	To determine traverse unit operation for inner & outer access track. In this mode, ensure the CD is in the main unit.	00000000 The counter will increment by one. When reach 99999999 will change to 00000000 Cancellation Display CANCEL	In Doctor Mode: 1. Press [10]→[1]→[2] button on the remote control. 2. To cancel this mode, press [0] button on the remote control.
Reliability Test (Combination)	To determine traverse unit operation & open/close operation of the mechanism. In this mode, ensure the CD is in the main unit.	00000000 The counter will increment by one. When reach 99999999 will change to 00000000 Cancellation Display CANCEL	In Doctor Mode: 1. Press [10]→[1]→[5] button on the remote control. 2. To cancel this mode, press [0] button on the remote control.
Loading Test	To determine open & close operation of the CD Mechanism Unit. In this mode, the tray will open & close automatically.	00000000 The counter will increment by one. When reach 99999999 will change to 00000000 Cancellation Display CANCEL	In Doctor Mode: 1. Press [10]→[2]→[1] button on the remote control. 2. To cancel this mode, press [0] button on the remote control.

6.4. Self-Diagnostic Mode

Item		FL Display	Key Operation
Mode Name	Description		Front Key
Self Diagnostic Mode	To enter into self diagnostic checking		Step 1: Select CD mode (Ensure no disc is inserted). Step 2: Press & hold [■] button follow by [▶▶/▶▶I] on main unit for 2 seconds.
Error Code Information	System will perform a check on any unusual/error code from the memory	Example: F61	Step 1: In self diagnostic mode, Press [■] on main unit. To exit, press [⏻/I] on main unit or remote control.
Delete error code	To clear the stored in memory (EEPROM IC)	CLEAR	Step 1: In self diagnostic mode, Press [0] on remote control. To exit, press [⏻/I] on main unit or remote control.

6.5. Self-Diagnostic Error Code Table

Self-Diagnostic Function provides information on any problems occurring for the unit and its respective components by displaying the error codes. These error code such as U**, H** and F** are stored in memory and held unless it is cleared.
The error code is automatically display after entering into self-diagnostic mode.

6.5.1. Power Supply Error Code Table

Item		FL Display	Key Operation
Mode Name	Description		Front Key
Error Code F61	Diagnosis Contents: Power Amp IC output abnormal. Upon power on, PCONT=HIGH, DC_DET_AMP after checking LSI.	F61	Press [■] on main unit for next error.
Error Code F76	Diagnosis Contents: Power Amp IC output abnormal. DC_DET_PWR.	F76	Press [■] on main unit for next error.
Error Code F61-76	Diagnosis Contents: Power Amp IC output abnormal. Both DCDET (NG).	F61--F76	Press [■] on main unit for next error.

6.5.2. CD Mechanism Error Code Table

Item		FL Display	Key Operation
Mode Name	Description		Front Key
Error Code CD H15	Diagnosis Contents: CD Open Abnormal. During operation POS_SW_R On fail to be detected within 4 sec. Error No. shall be clear by force or during cold start.	CD H15	Press [■] on main unit for next error.
Error Code CD H16	Diagnosis Contents: CD Closing Abnormal. During operation POS_SW_CEN On fail to be detected within 4 sec. Error No. shall be clear by force or during cold start.	CD H16	Press [■] on main unit for next error.
Error Code F26	Diagnosis Contents: Communication between CD servo LSI and micro-p abnormal. During switch to CD function, if SENSE = “L” within fail safe time of 20ms.	F-26	Press [■] on main unit for next error.

6.5.3. Bluetooth Error Code Table

Item		FL Display	Key Operation
Mode Name	Description		Front Key
Error Code F70	Diagnosis Contents: Bluetooth Communication. Communication between Bluetooth module and micro-p abnormal.	F-70	Press [■] on main unit for next error.
Error Code F77	Diagnosis Contents: Bluetooth Address Error If there is no valid Bluetooth address stored in the EEPROM IC.	F-77	Press [■] on main unit for next error.

7 Troubleshooting Guide

“Contents for this section is not available at time of issue”

8 Disassembly and Assembly Instructions

- **Illustration is based on SA-AKX800PN/PS.**

Caution Note:

- **This section describes the disassembly and/or assembly procedures for all major printed circuit boards & main components for the unit. (You may refer to the section of "Main components and P.C.B Locations" as described in the service manual)**
- **Before carrying out the disassembly process, please ensure all the safety precautions & procedures are followed.**
- **During the disassembly and/or assembly process, please handle with care as there may be chassis components with sharp edges.**
- **Avoid touching heatsinks due to its high temperature after prolong use. (See caution as described below)**

CAUTION: HOT!!
PLEASE DO NOT
TOUCH THE HEAT SINK

- **During disassembly and assembly, please ensure proper service tools, equipments or jigs is being used.**
- **During replacement of component parts, please refer to the section of "Replacement Parts List" as described in the service manual.**
- **Select items from the following indexes when disassembly or replacement are required.**
- Disassembly of Top Cabinet
- Disassembly of Front Panel Unit
- Disassembly of Panel P.C.B.
- Disassembly of USB P.C.B.
- Disassembly of Music Port P.C.B.
- Disassembly of Rear Panel
- Disassembly of Main P.C.B.
- Disassembly of SMPS Module
- Disassembly of Tuner P.C.B.
- Disassembly of CD Mechanism Unit
- Disassembly of CD Interface P.C.B.

8.1. Types of Screws

CAUTION NOTE:
Please use original screw and at correct locations.

Below shown is part no. of different screw types used:

- a :RHD30007-K2J
- b :RHD30119-S
- c :RHD26046-L
- d :RHD30111-31
- e :RHDX30005-J
- f :RHDX031008
- g :XTN2+6GFJ

8.2. Disassembly Flow Chart

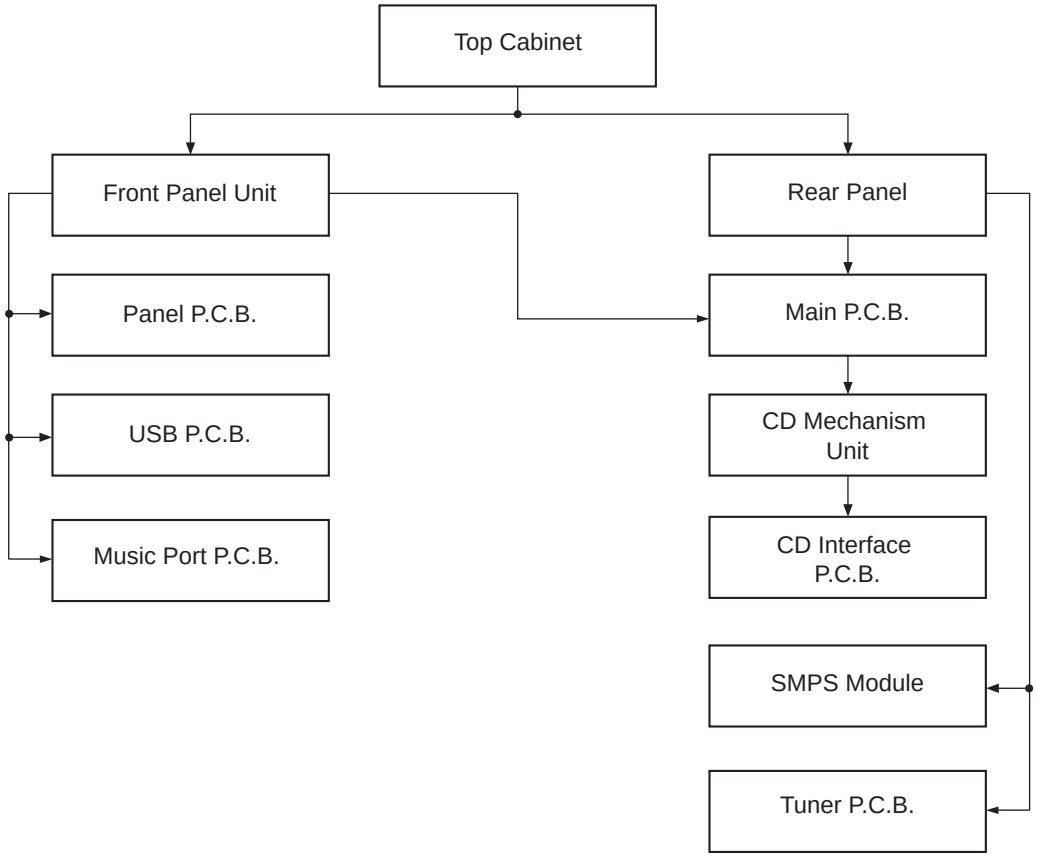

8.3. Main Components and P.C.B. Locations

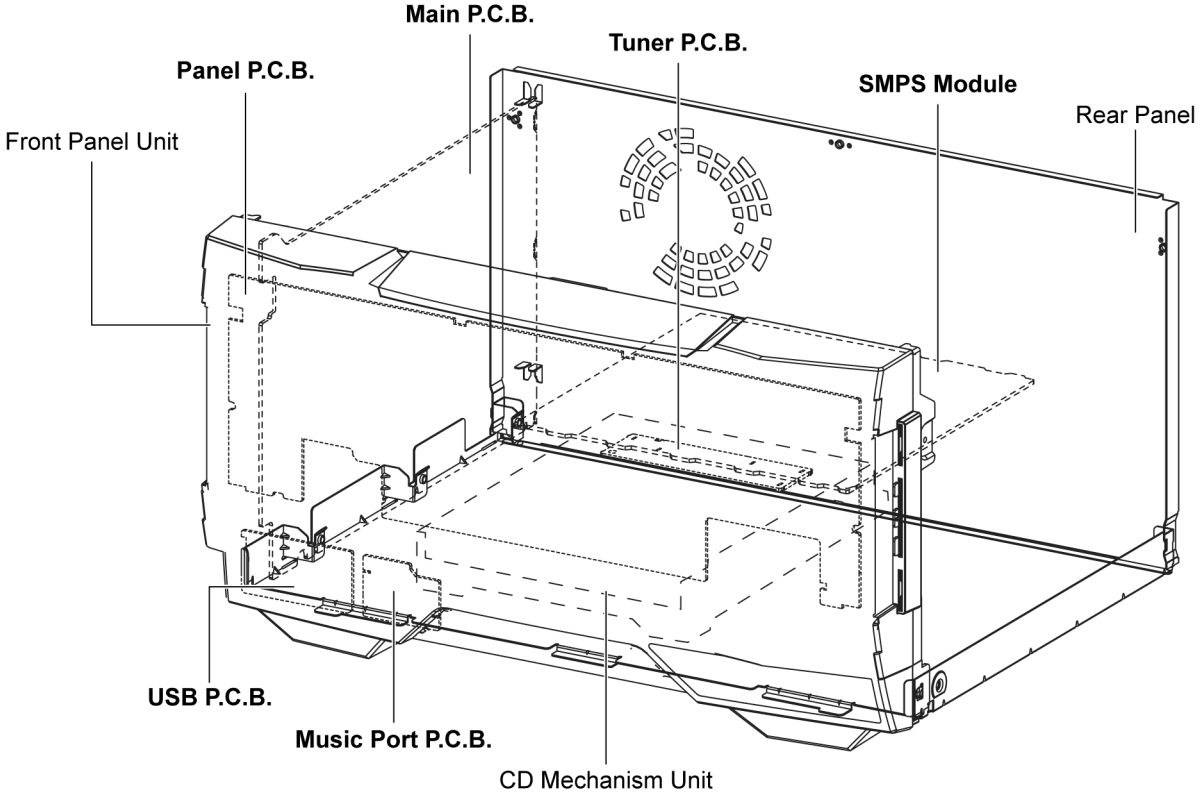

8.4. Disassembly of Top Cabinet

Step 1 Remove 2 screws.

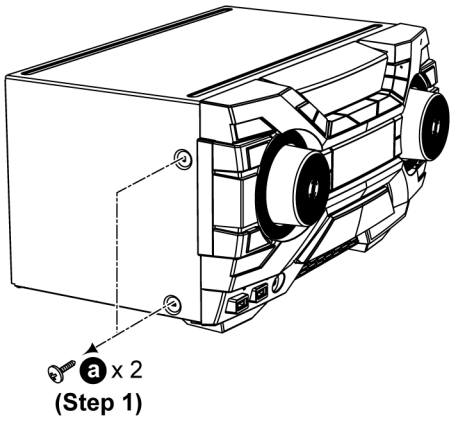

Step 2 Remove 2 screws.

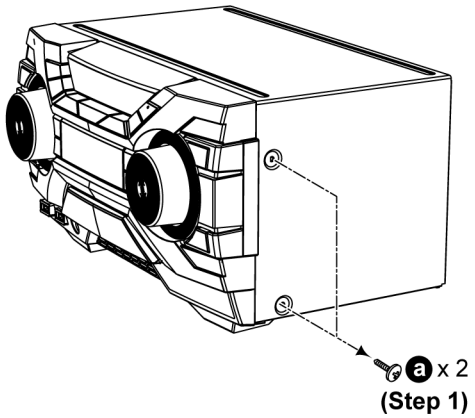

Step 3 Remove 5 screws.
Step 4 Slightly release both sides of Top Cabinet.

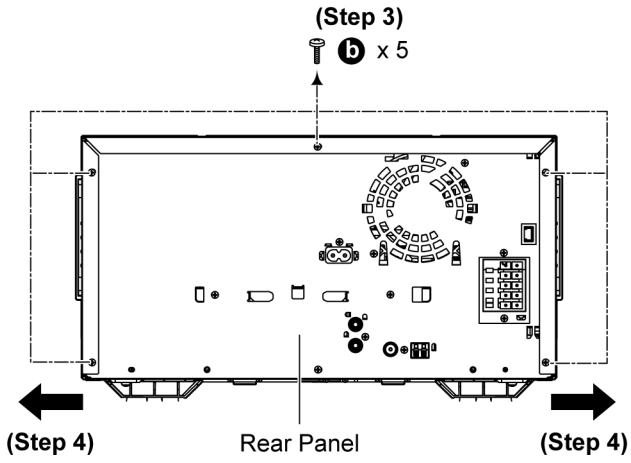

Step 5 Slightly lift up to remove Top Cabinet.

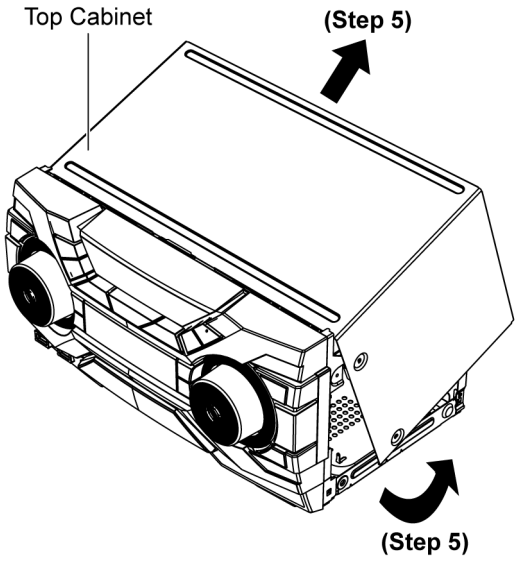

8.5. Disassembly of Front Panel Unit

- **Refer to "Disassembly of Top Cabinet".**

Step 1 Detach 9P Cable at connector (CN2511) on Main P.C.B..
Step 2 Detach 22P FFC at connector (CN2506) on Main P.C.B..
Step 3 Detach 4P Cable at connector (CN2507) on Main P.C.B..

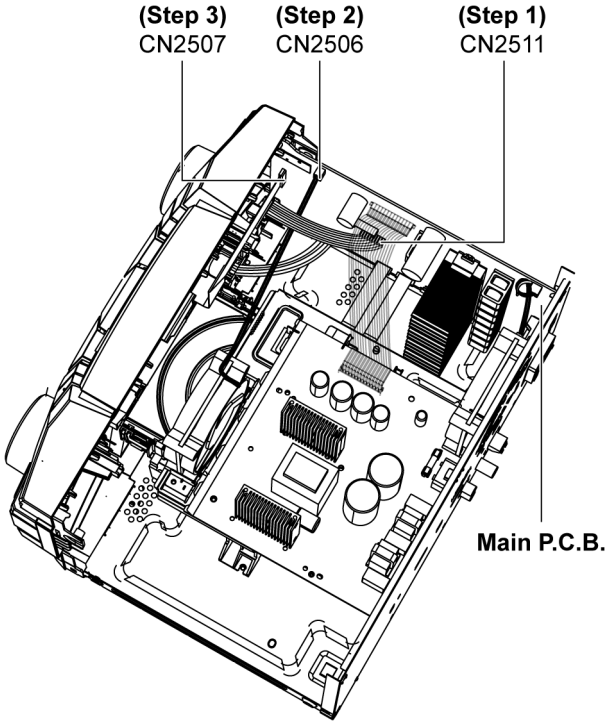

Step 4 Release tabs on both sides of Front Panel Unit and at bottom of unit.
Step 5 Detach to remove Front Panel Unit.

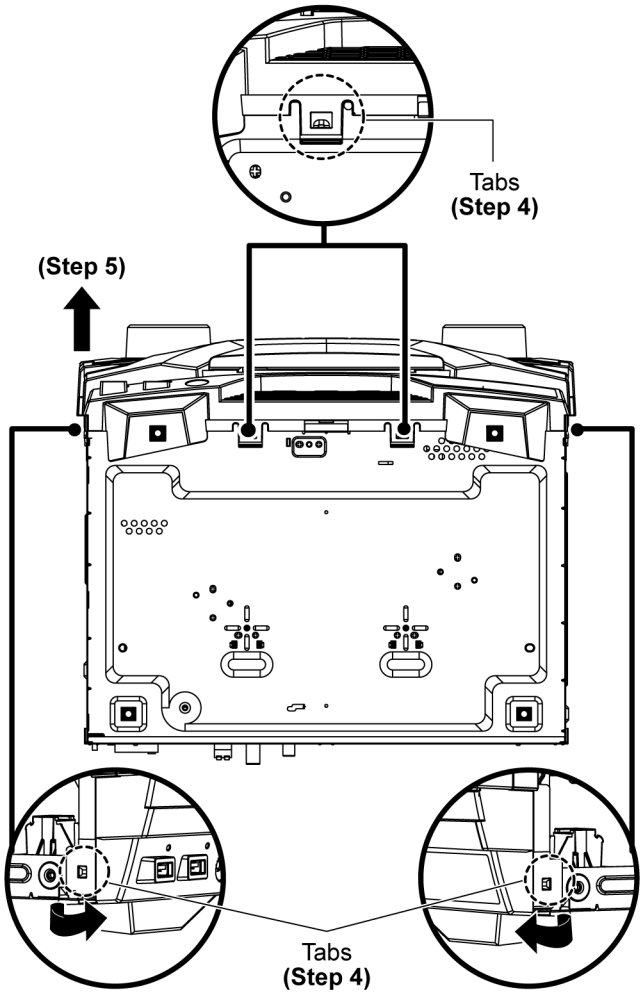

8.6. Disassembly of Panel P.C.B.

- **Refer to "Disassembly of Top Cabinet".**
- **Refer to "Disassembly of Front Panel Unit".**

Step 1 Remove Volume Knob.

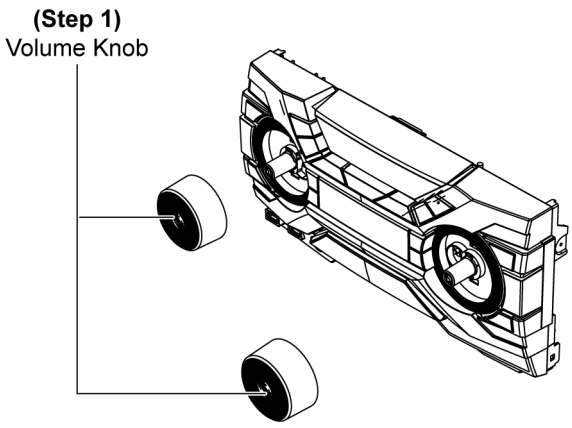

Step 2 Remove 2 screws.
Step 3 Release catches.
Step 4 Lift up to remove Panel P.C.B..

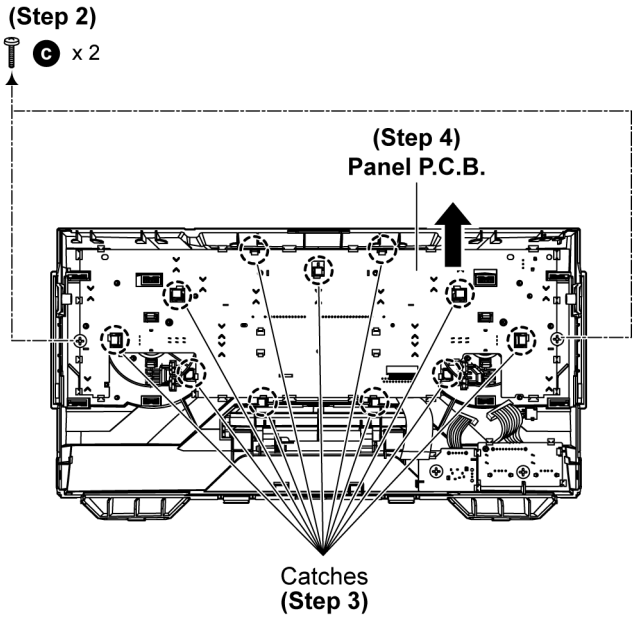

8.7. Disassembly of USB P.C.B.

- **Refer to “Disassembly of Top Cabinet”.**
- **Refer to “Disassembly of Front Panel Unit”.**

Step 1 Remove screw.
Step 2 Release catch.
Step 3 Lift up to remove USB P.C.B..

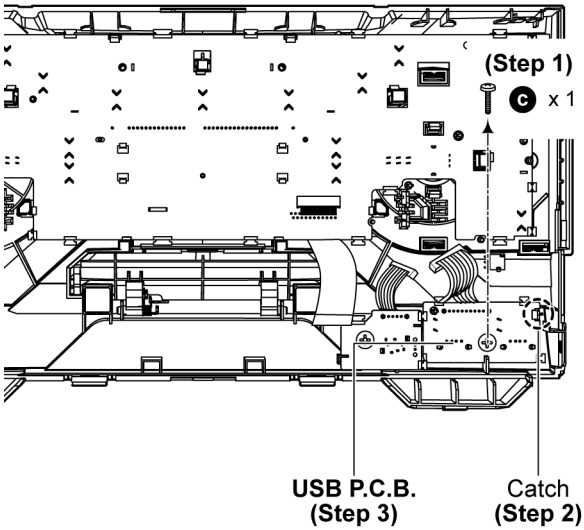

8.8. Disassembly of Music Port P.C.B.

- **Refer to “Disassembly of Top Cabinet”.**
- **Refer to “Disassembly of Front Panel Unit”.**

Step 1 Remove screw.
Step 2 Lift up to remove Music Port P.C.B..

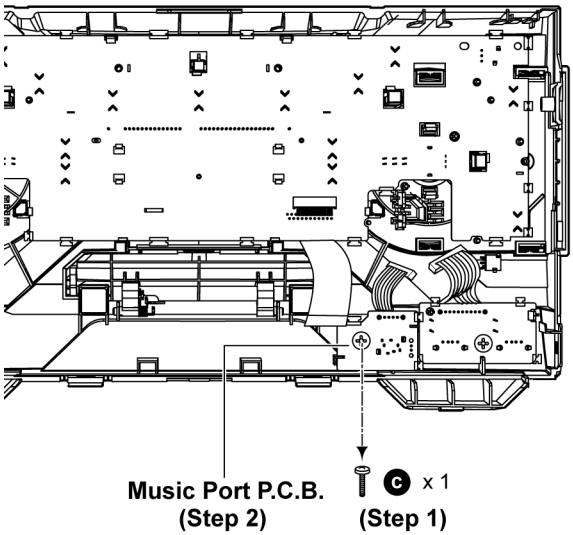

8.9. Disassembly of Rear Panel

- **Refer to “Disassembly of Top Cabinet”.**

Step 1 Remove 10 screws.

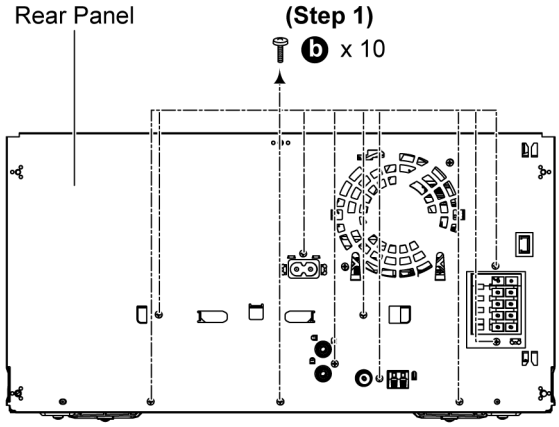

Step 2 Lift up Wire Clamper.
Step 3 Detach 2P Wire at connector (CN2102) on Main P.C.B..

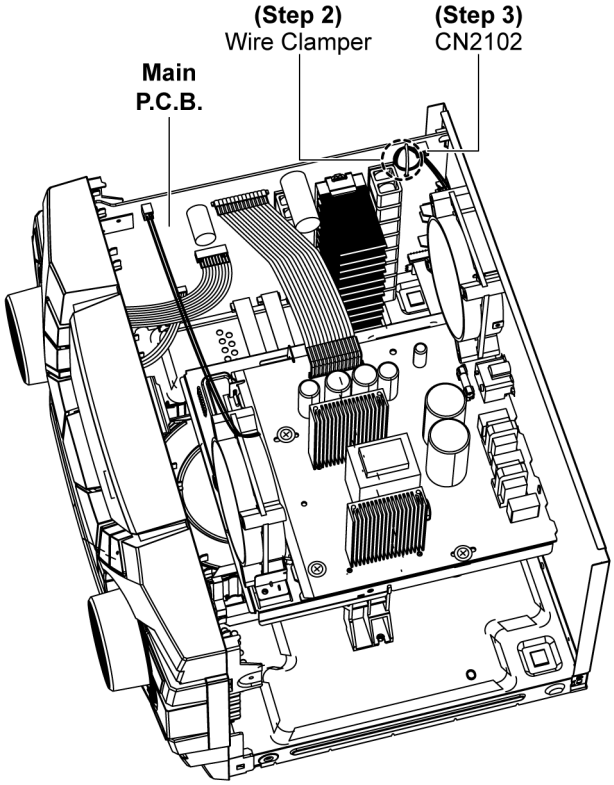

Step 4 Release tabs.
Step 5 Remove Rear Panel.

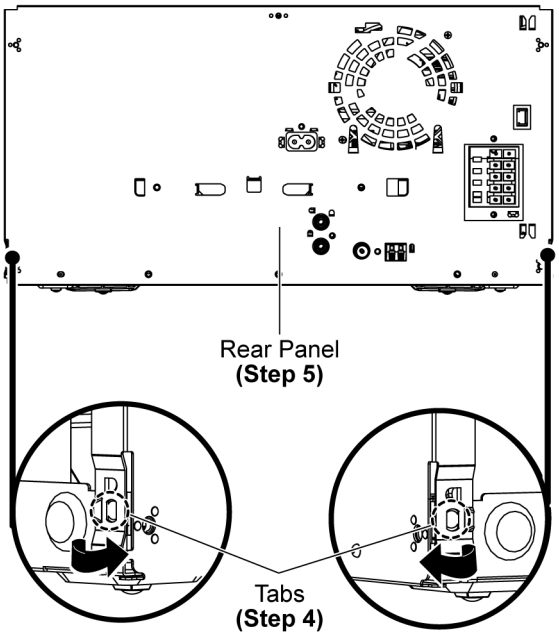

8.10. Disassembly of Main P.C.B.

- **Refer to "Disassembly of Top Cabinet".**
- **Refer to "Disassembly of Front Panel Unit".**
- **Refer to "Disassembly of Rear Panel".**

Step 1 Detach 13P Cable at connector (CON2) on SMPS Module.
Step 2 Detach 2P Wire at connector (CN2101) on Main P.C.B..
Step 3 Detach 15P FFC at connector (CN6100) on Main P.C.B..

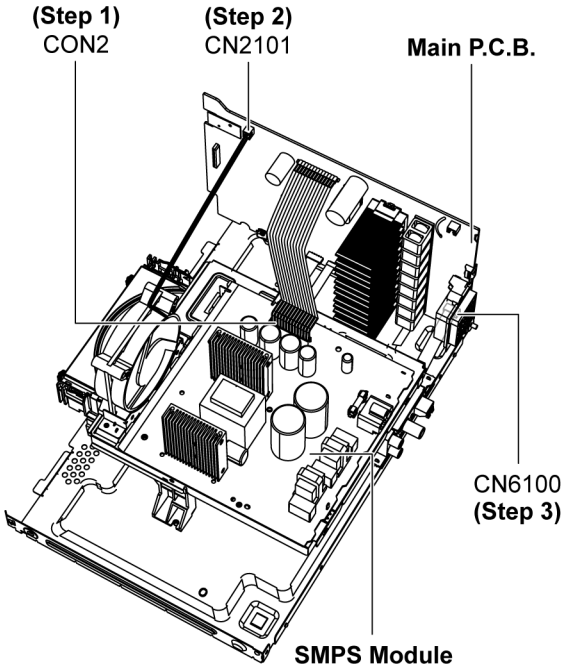

Step 4 Remove 3 screws.
Step 5 Lift up to detach Main P.C.B..

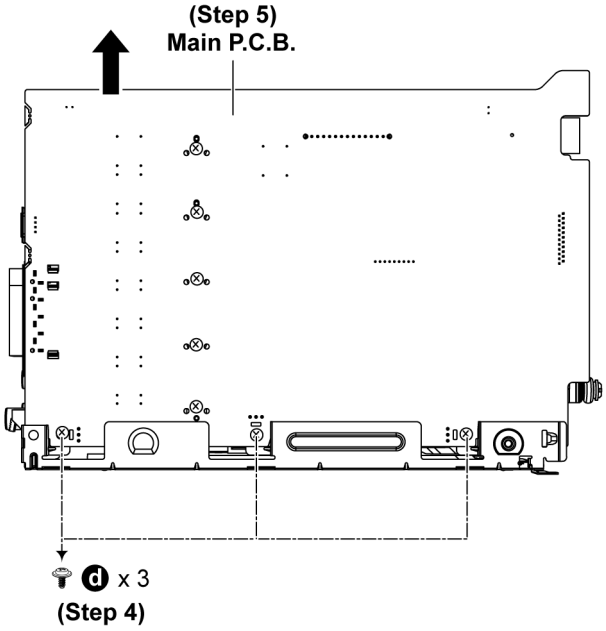

Step 6 Detach 10 FFC at connector (P5102) on Main P.C.B..
Step 7 Detach 24P FFC at connector (P5002) on Main P.C.B..
Step 8 Remove Main P.C.B..

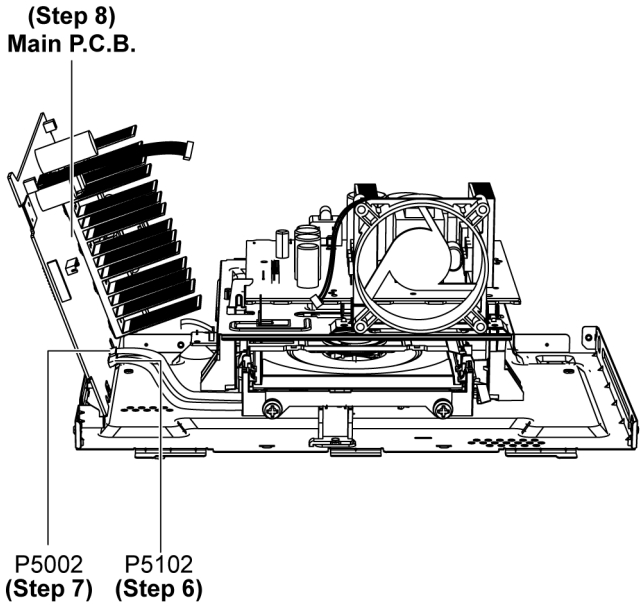

8.11. Disassembly of SMPS Module

- **Refer to “Disassembly of Top Cabinet”.**
- **Refer to “Disassembly of Rear Panel”.**

Step 1 Detach 13P Cable at connector (CON2) on SMPS Module.
Step 2 Remove 3 screws.
Step 3 Release P.C.B. Spacer.
Step 4 Remove SMPS Module.

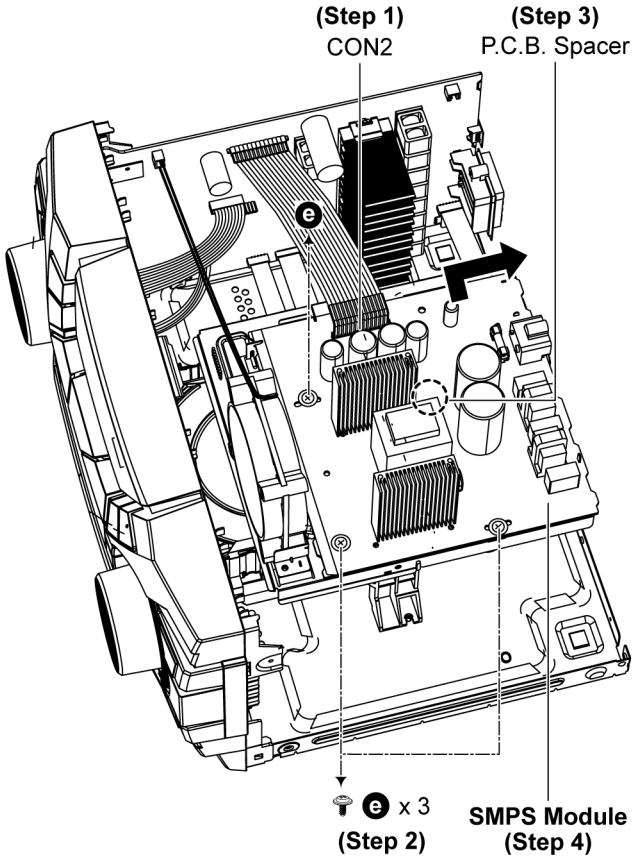

8.12. Disassembly of Tuner P.C.B.

- **Refer to “Disassembly of Top Cabinet”.**
- **Refer to “Disassembly of Rear Panel”.**

Step 1 Remove screw.
Step 2 Detach 15P FFC at connector (CN51) on Tuner P.C.B..
Step 3 Remove Tuner P.C.B..

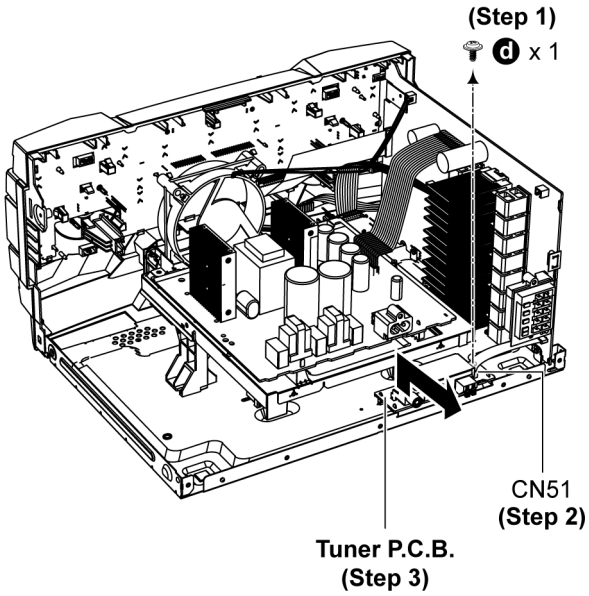

8.13. Disassembly of CD Mechanism Unit

- **Refer to “Disassembly of Top Cabinet”.**
- **Refer to “Disassembly of Front Panel Unit”.**
- **Refer to “Disassembly of Rear Panel”.**
- **Refer to “Disassembly of Main P.C.B.”.**

Step 1 Remove screw.

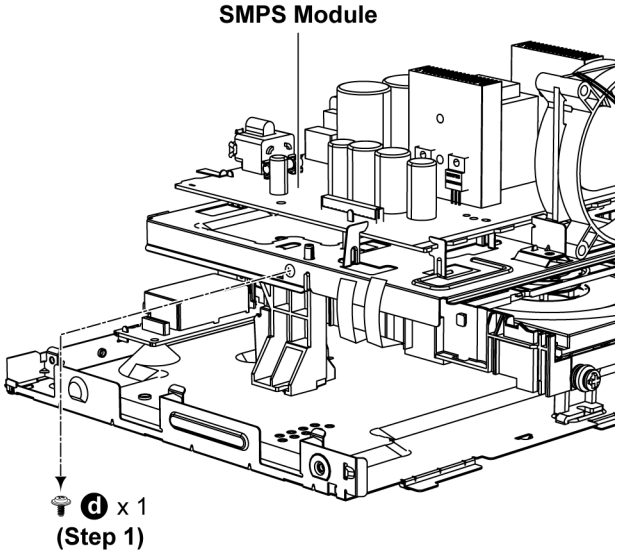

Step 2 Remove screw.

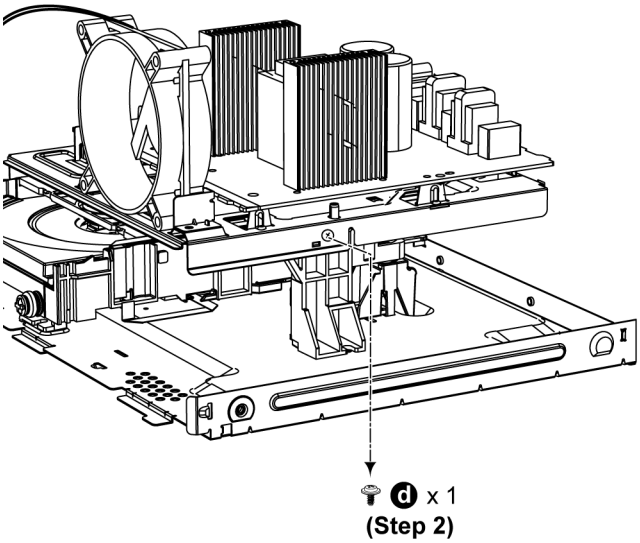

Step 3 Release catches.
Step 4 Lift up to remove Inner Chassis Unit.

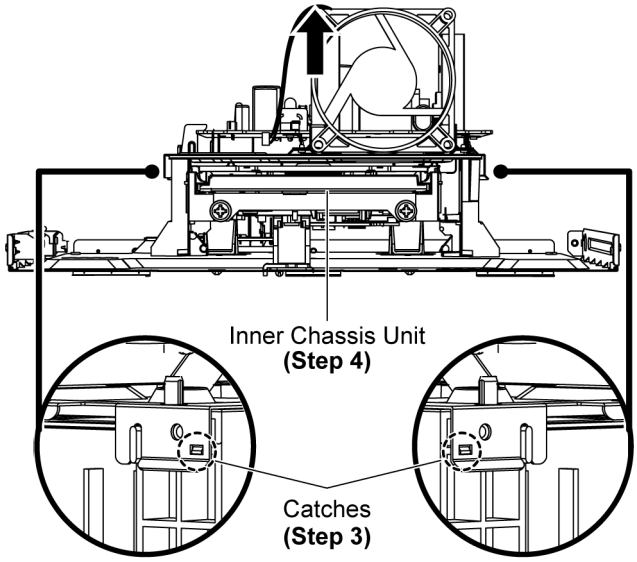

Step 5 Remove 2 screws.
Step 6 Remove CD Mechanism Unit.

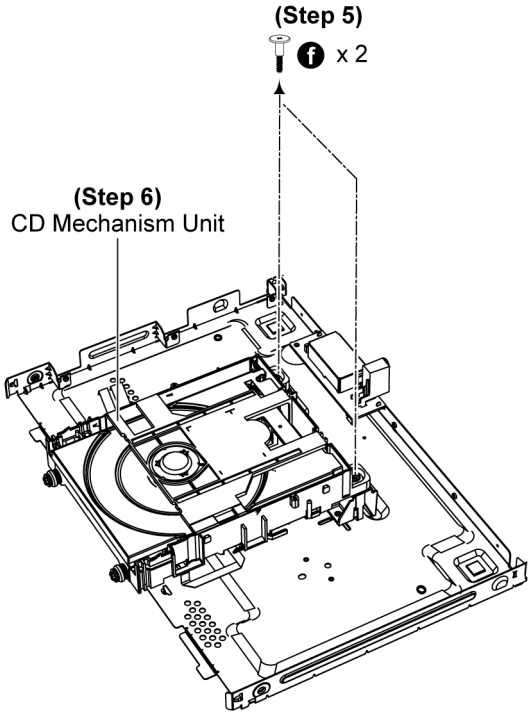

8.14. Disassembly of CD Interface P.C.B.

- **Refer to “Disassembly of Top Cabinet”.**
- **Refer to “Disassembly of Front Panel Unit”.**
- **Refer to “Disassembly of Rear Panel”.**
- **Refer to “Disassembly of Main P.C.B.”.**
- **Refer to “Disassembly of CD Mechanism Unit”.**

Step 1 Remove 2 screws.
Step 2 Desolder pins of the motor (M7301).
Step 3 Desolder pins of the motor (M7302).
Step 4 Remove CD Interface P.C.B..

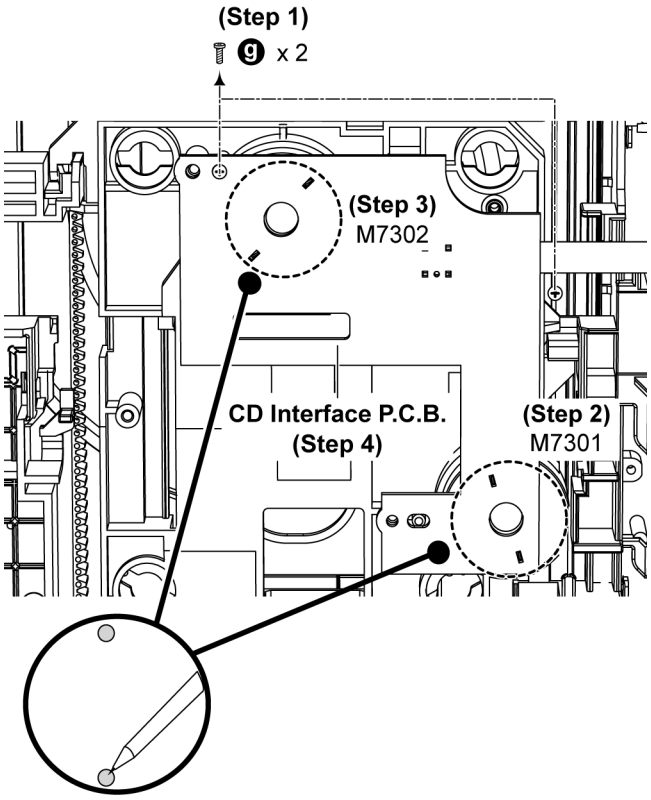

9 Service Position

Note: For description of the disassembly procedures, see the Section 8.

9.1. Checking of Panel P.C.B.

Step 1 Remove Top Cabinet.
Step 2 Detach Front Panel Unit.
Step 3 Attach 22P FFC at connector (CN2506) on Main P.C.B..
Step 4 Panel P.C.B. can be checked as diagram shown.

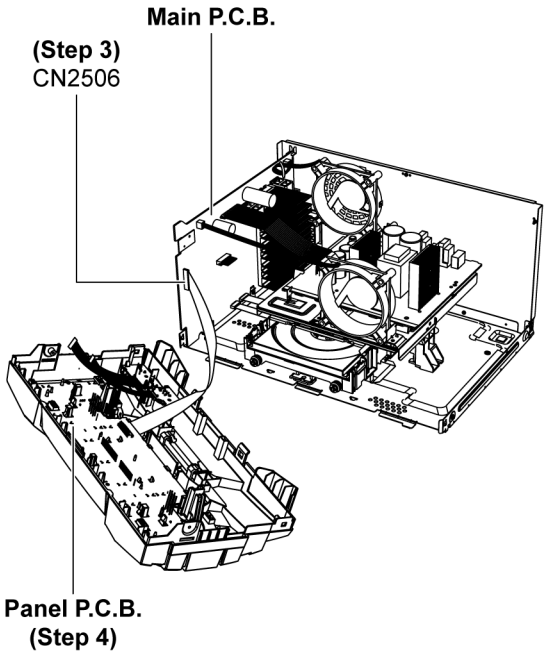

9.2. Checking of Main P.C.B. and SMPS Module

Step 1 Remove Top Cabinet.
Step 2 Detach Front Panel Unit.
Step 3 Remove Rear Panel.
Step 4 Remove Main P.C.B..
Step 5 Remove SMPS Module.
Step 6 Remove 2 screws.
Step 7 Remove fan.

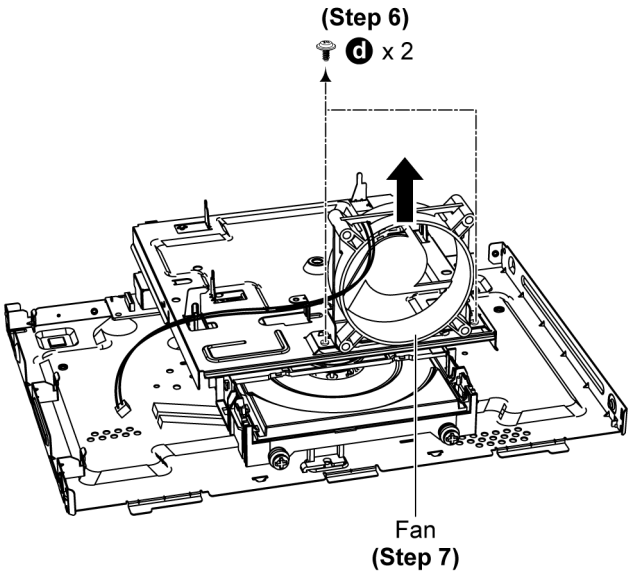

Step 8 Place Main P.C.B. and SMPS Module on the insulated material.
Step 9 Attach 22P FFC at connector (CN2506) on Main P.C.B..
Step 10 Attach 10 FFC at connector (P5102) on Main P.C.B..
Step 11 Attach 24P FFC at connector (P5002) on Main P.C.B..
Step 12 Attach 13P Cable at connector (CON2) on SMPS Module.
Step 13 Attach 2P Wire at connector (CN2101) on Main P.C.B..
Step 14 Attach 2P Wire at connector (CN2102) on Main P.C.B..
Step 15 Main P.C.B. and SMPS Module can be checked as diagram shown.

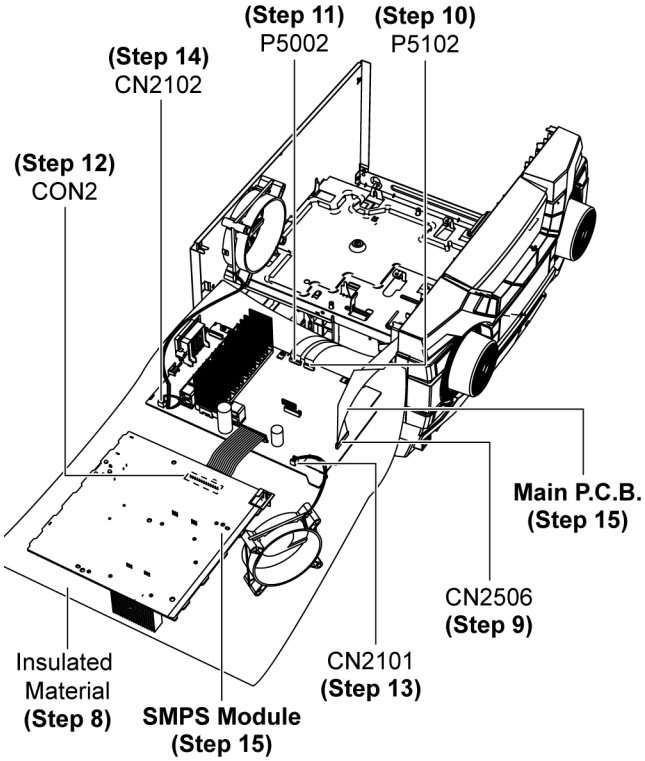

10 Block Diagram

10.1. System Control

: CD INPUT SIGNAL LINE : TUNER/AUX INPUT SIGNAL LINE : USB SIGNAL LINE

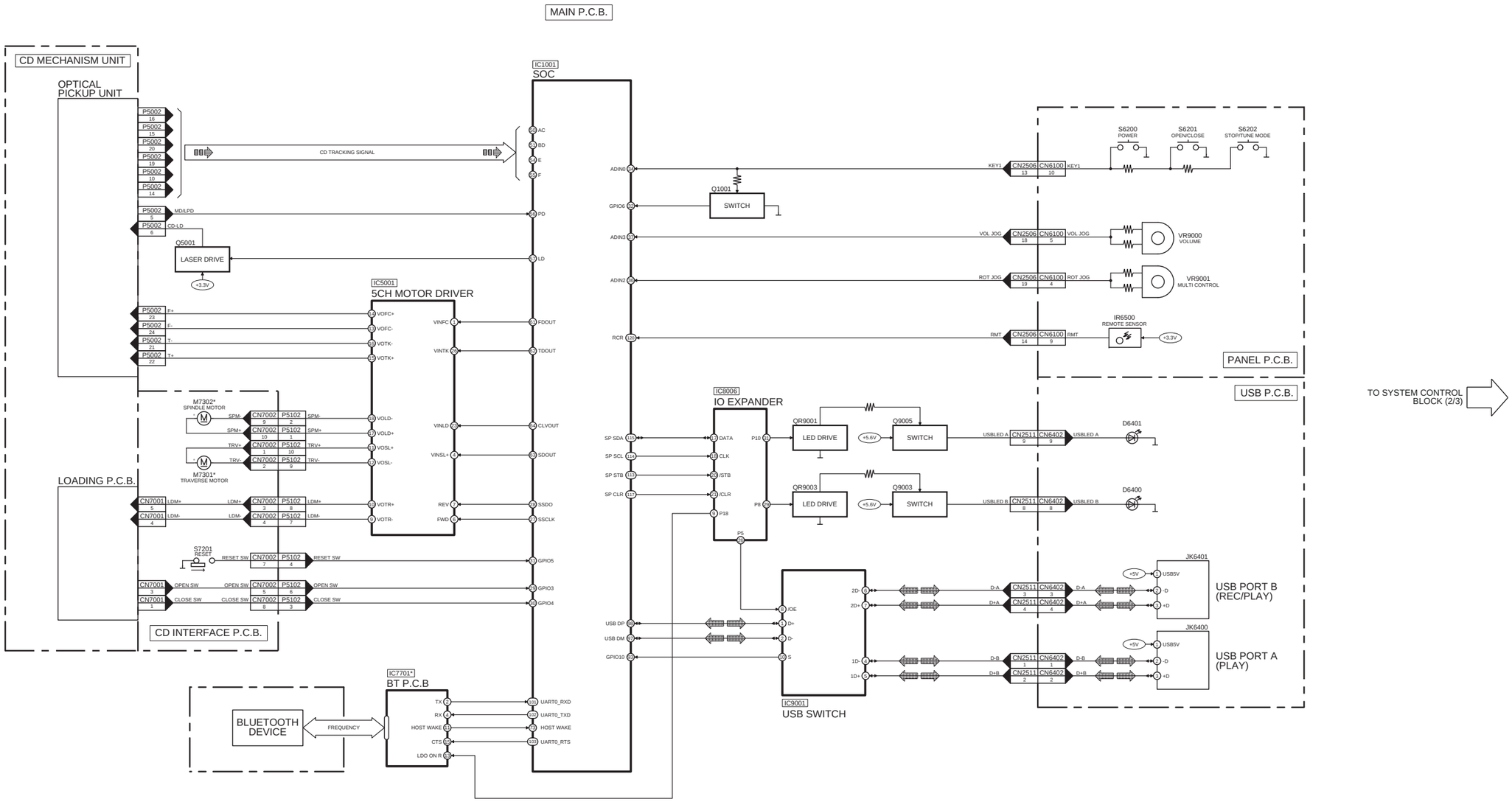

NOTE: “ * ” REF IS FOR INDICATION ONLY

SA-AKX600PN/PS,SA-AKX800PN/PS SYSTEM CONTROL (1/3) BLOCK DIAGRAM

: CD INPUT SIGNAL LINE : TUNER/AUX INPUT SIGNAL LINE : USB SIGNAL LINE

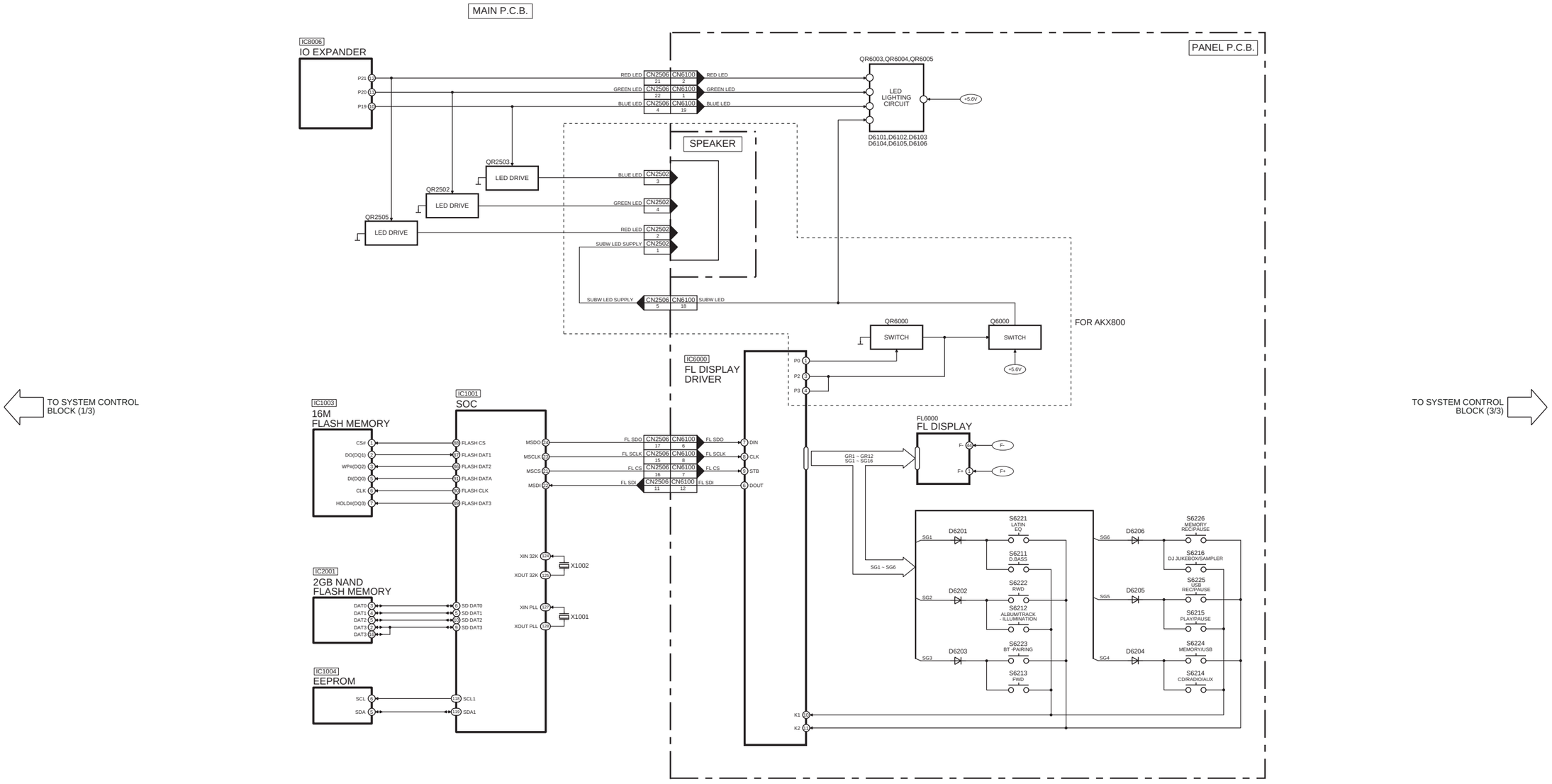

SA-AKX600PN/PS,SA-AKX800PN/PS SYSTEM CONTROL (2/3) BLOCK DIAGRAM

: CD INPUT SIGNAL LINE : TUNER/AUX INPUT SIGNAL LINE : USB SIGNAL LINE

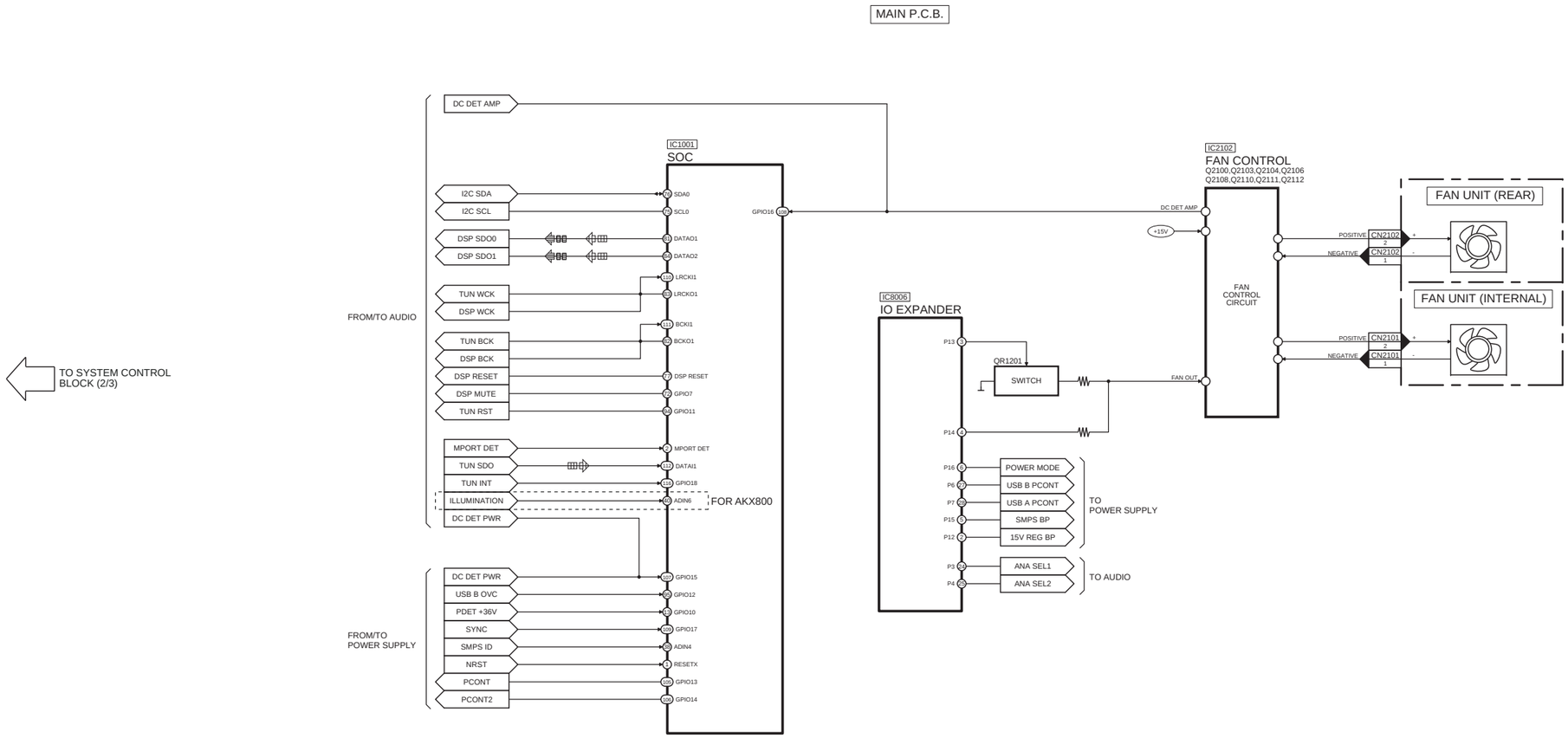

SA-AKX600PN/PS,SA-AKX800PN/PS SYSTEM CONTROL (3/3) BLOCK DIAGRAM

10.2. Audio

: CD INPUT SIGNAL LINE : TUNER/AUX INPUT SIGNAL LINE : AUDIO OUTPUT SIGNAL LINE : AM SIGNAL LINE : FM SIGNAL LINE

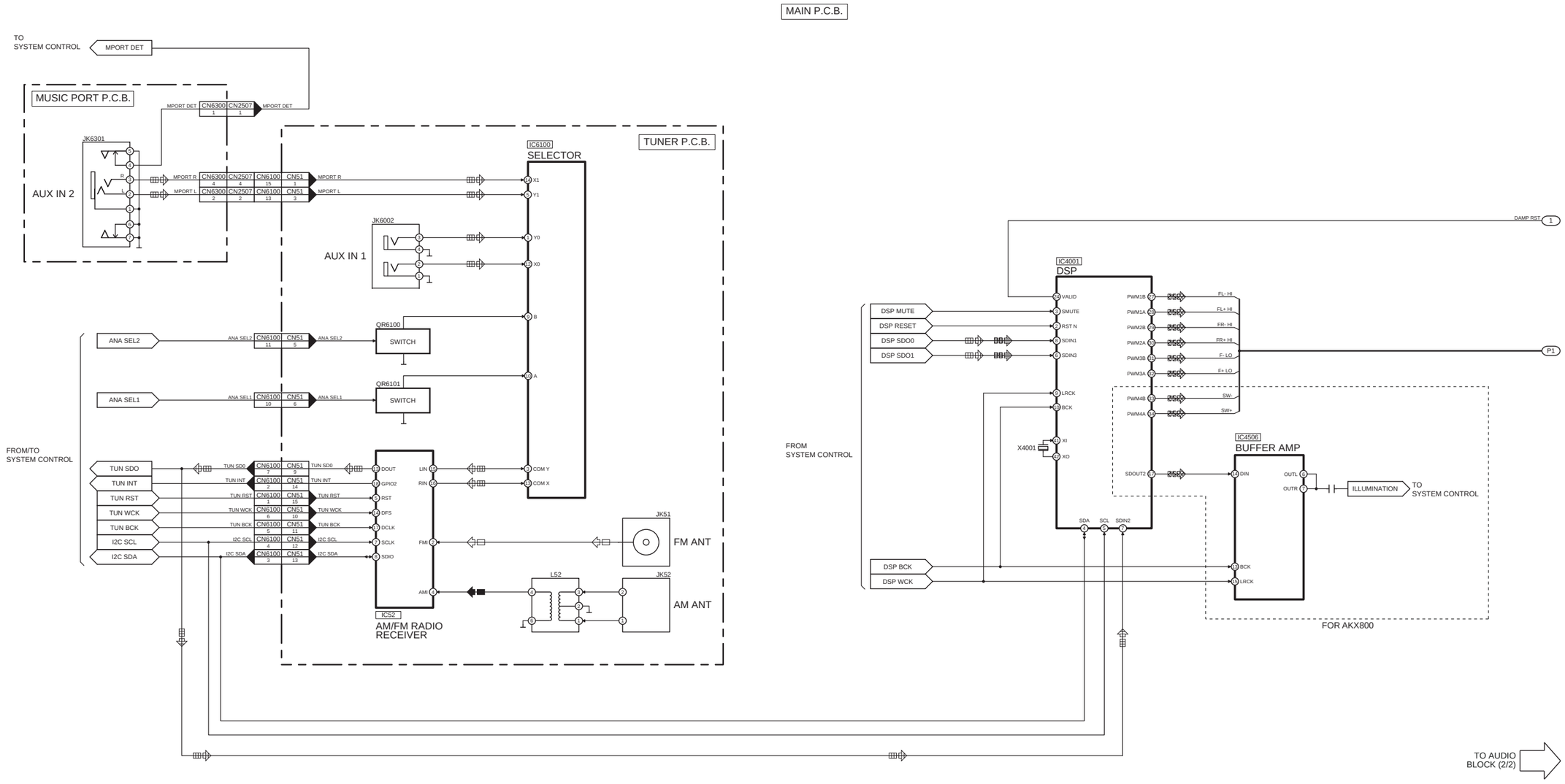

SA-AKX600PN/PS,SA-AKX800PN/PS AUDIO (1/2) BLOCK DIAGRAM

: CD INPUT SIGNAL LINE : TUNER/AUX INPUT SIGNAL LINE : AUDIO OUTPUT SIGNAL LINE : AM SIGNAL LINE : FM SIGNAL LINE

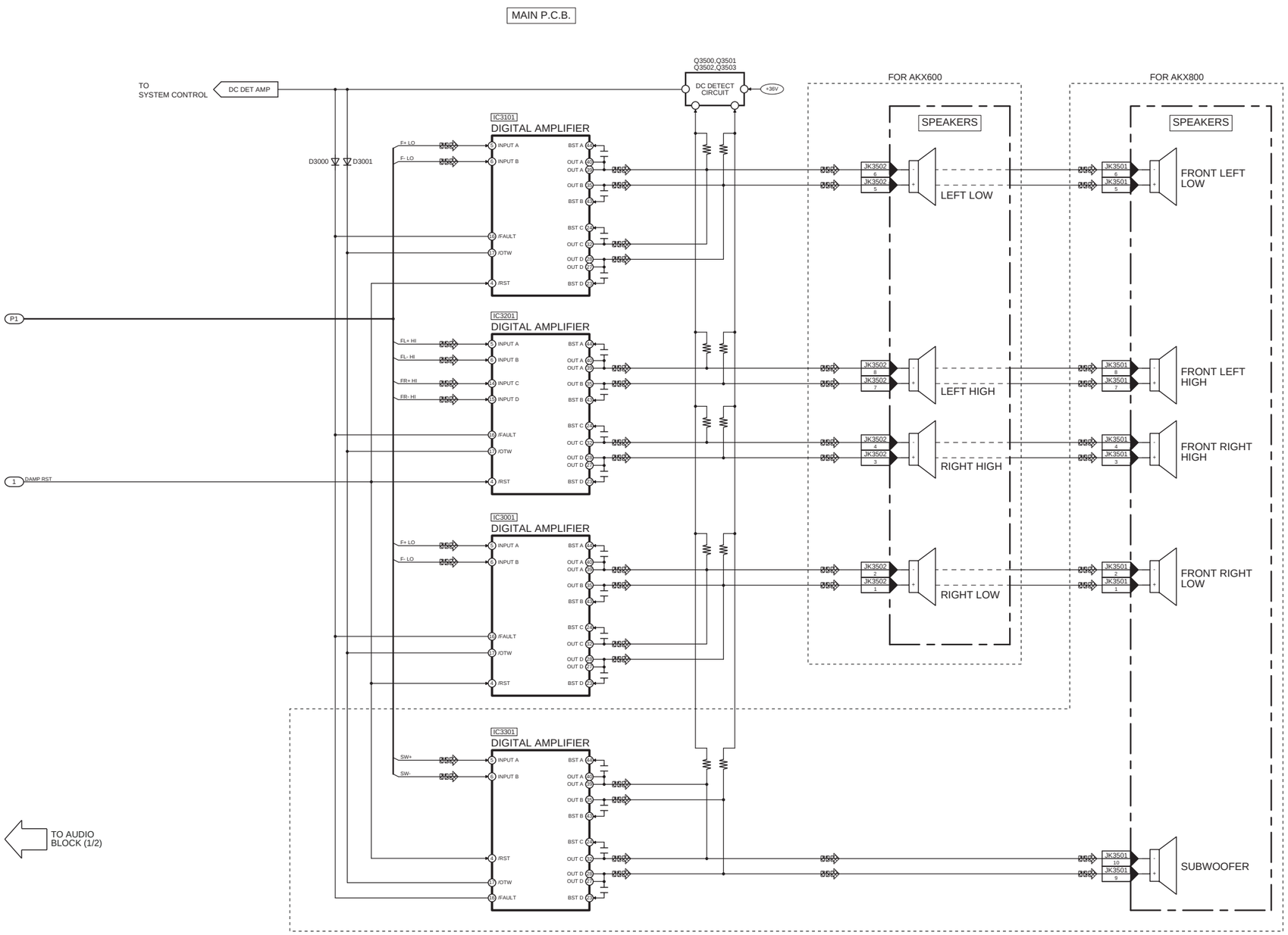

SA-AKX600PN/PS,SA-AKX800PN/PS AUDIO (2/2) BLOCK DIAGRAM

10.3. Power Supply

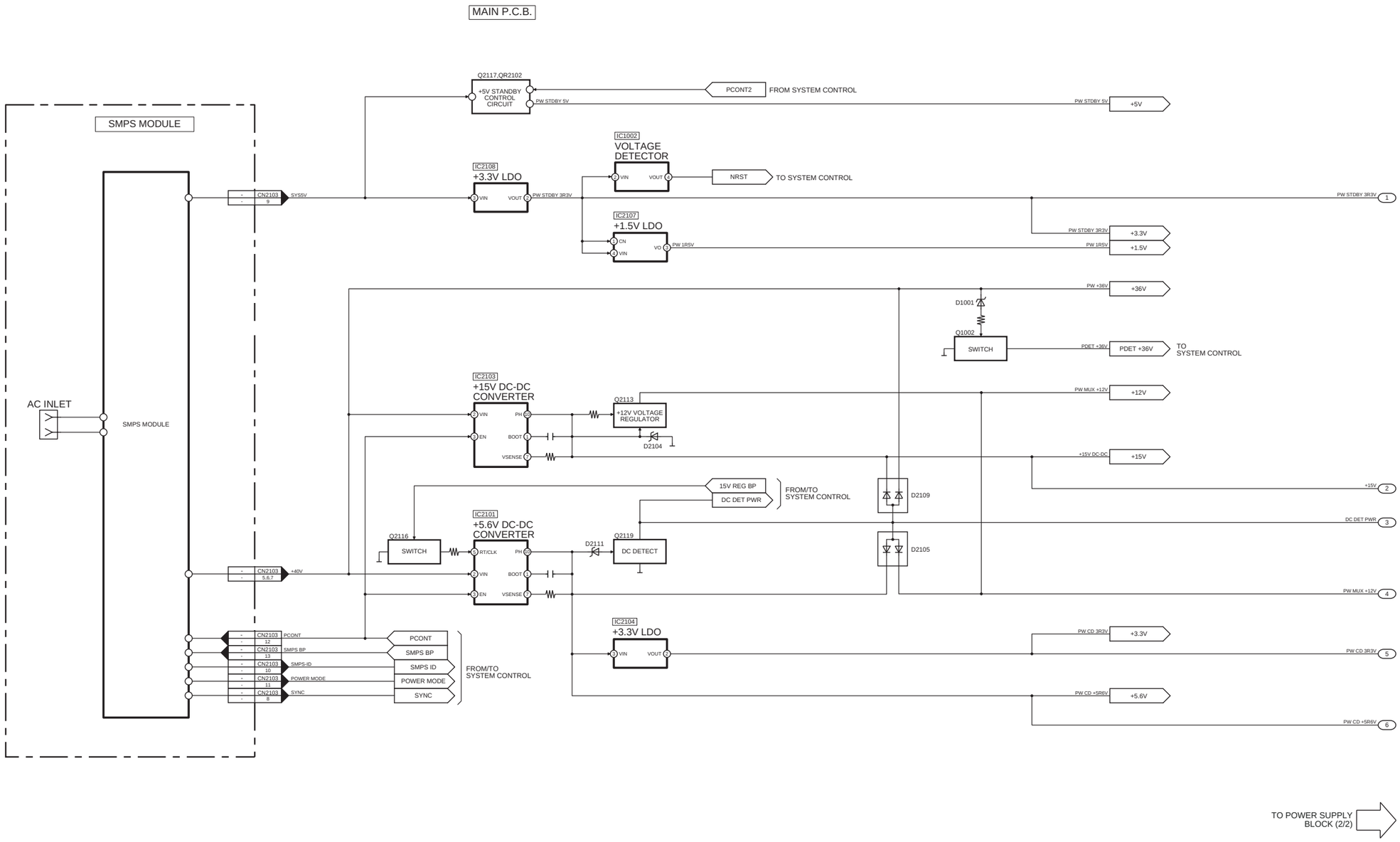

SA-AKX600PN/PS,SA-AKX800PN/PS POWER SUPPLY (1/2) BLOCK DIAGRAM

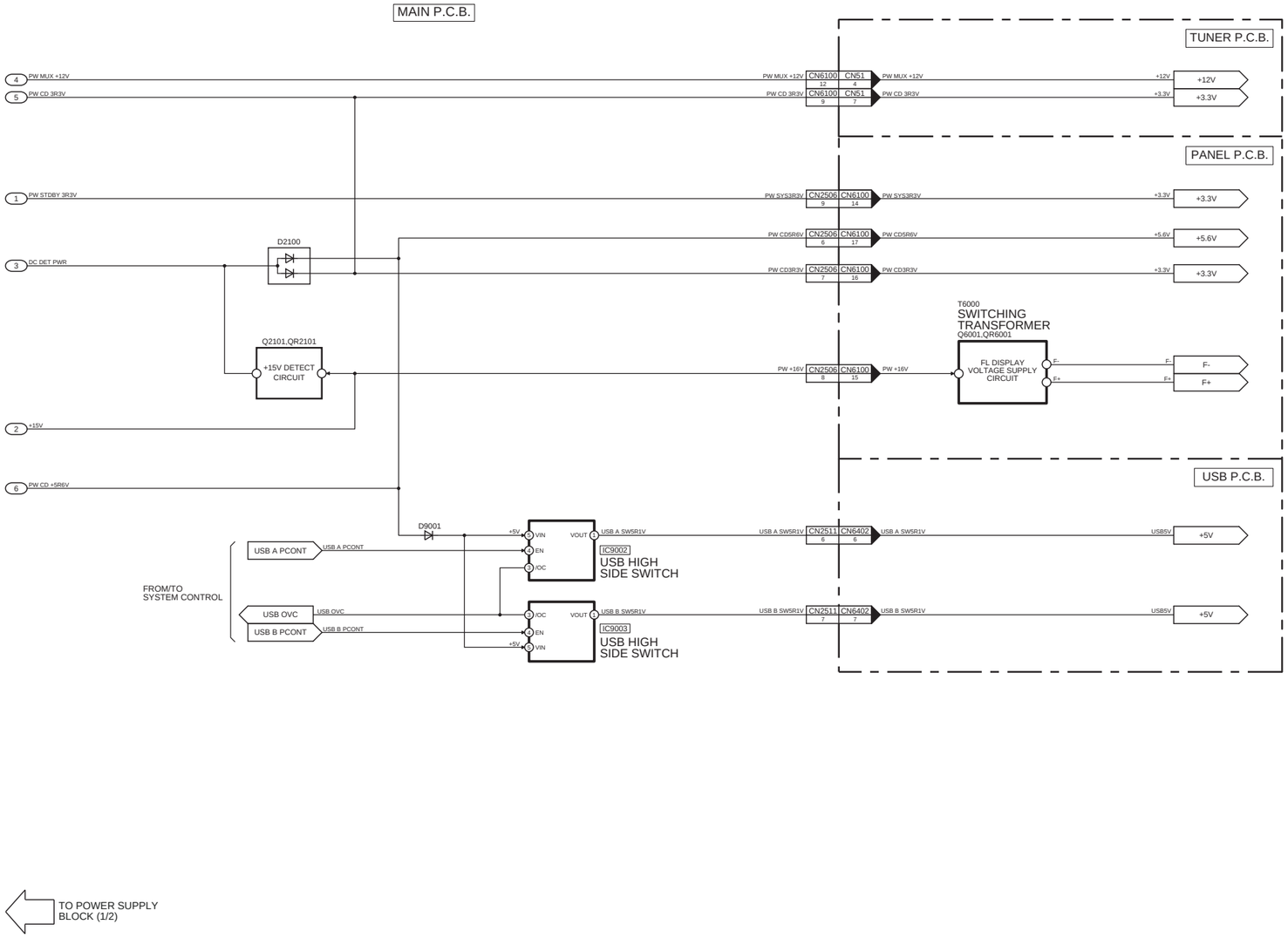

SA-AKX600PN/PS,SA-AKX800PN/PS POWER SUPPLY (2/2) BLOCK DIAGRAM

11 Wiring Connection Diagram

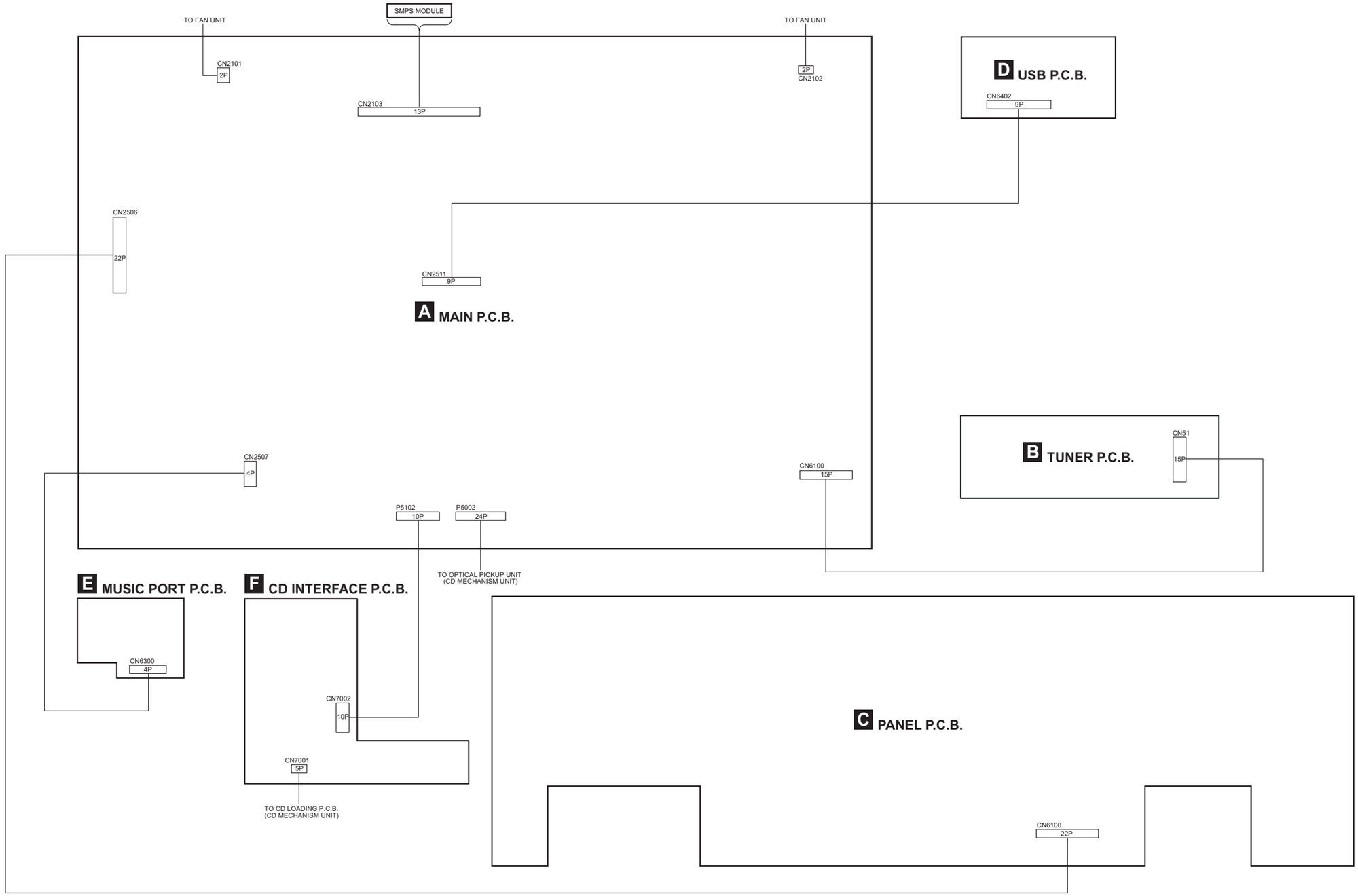

SA-AKX600PN/PS, SA-AKX800PN/PS WIRING CONNECTION DIAGRAM

12 Schematic Diagram

12.1. Schematic Diagram Notes

- **This schematic diagram may be modified at any time with the development of new technology.**

Notes:

S6200:	Power switch (⏻/I).
S6201:	Open/Close switch (⏏).
S6202:	Stop/Tune (■) switch.
S6211:	D.Bass switch.
S6212:	Album/Track-Illumination switch.
S6213:	Forward (▶▶/▶▶I) switch.
S6214:	CD/Radio/AUX switch.
S6215:	Play/Pause (▶/❚❚) switch.
S6216:	DJ Jukebox/Sampler switch.
S6221:	Latin/EQ switch.
S6222:	Rewind (I◀◀/◀◀) switch.
S6223:	Bluetooth/-Pairing switch.
S6224:	Memory/USB switch.
S6225:	USB Rec switch.
S6226:	Memory Rec switch.
S7201:	Reset switch
VR9000:	Volume Jog.
VR9001:	Multi Control Jog.

- Important safety notice:

  Components identified by ⚠ mark have special characteristics important for safety.
  Furthermore, special parts which have purposes of fire-retardant (resistors), high quality sound (capacitors), low-noise (resistors), etc are used.
  When replacing any of components, be sure to use only manufacturer's specified parts shown in the parts list.

- **Resistor**
  Unit of resistance is OHM [Ω] (K=1,000, M=1,000,000).

- **Capacitor**
  Unit of capacitance is μF, unless otherwise noted. F=Farads, pF=pico-Farad.

- **Coil**
  Unit of inductance is H, unless otherwise noted.

- *****
  REF IS FOR INDICATION ONLY.

- Voltage and signal line

	: +B signal line
	: -B signal line
	: CD input signal line
	: Tuner/AUX/Mic input signal line
	: Audio output signal line
	: USB signal line
	: FM signal line
	: AM signal line

12.2. Main (CD Motor Driver) Circuit

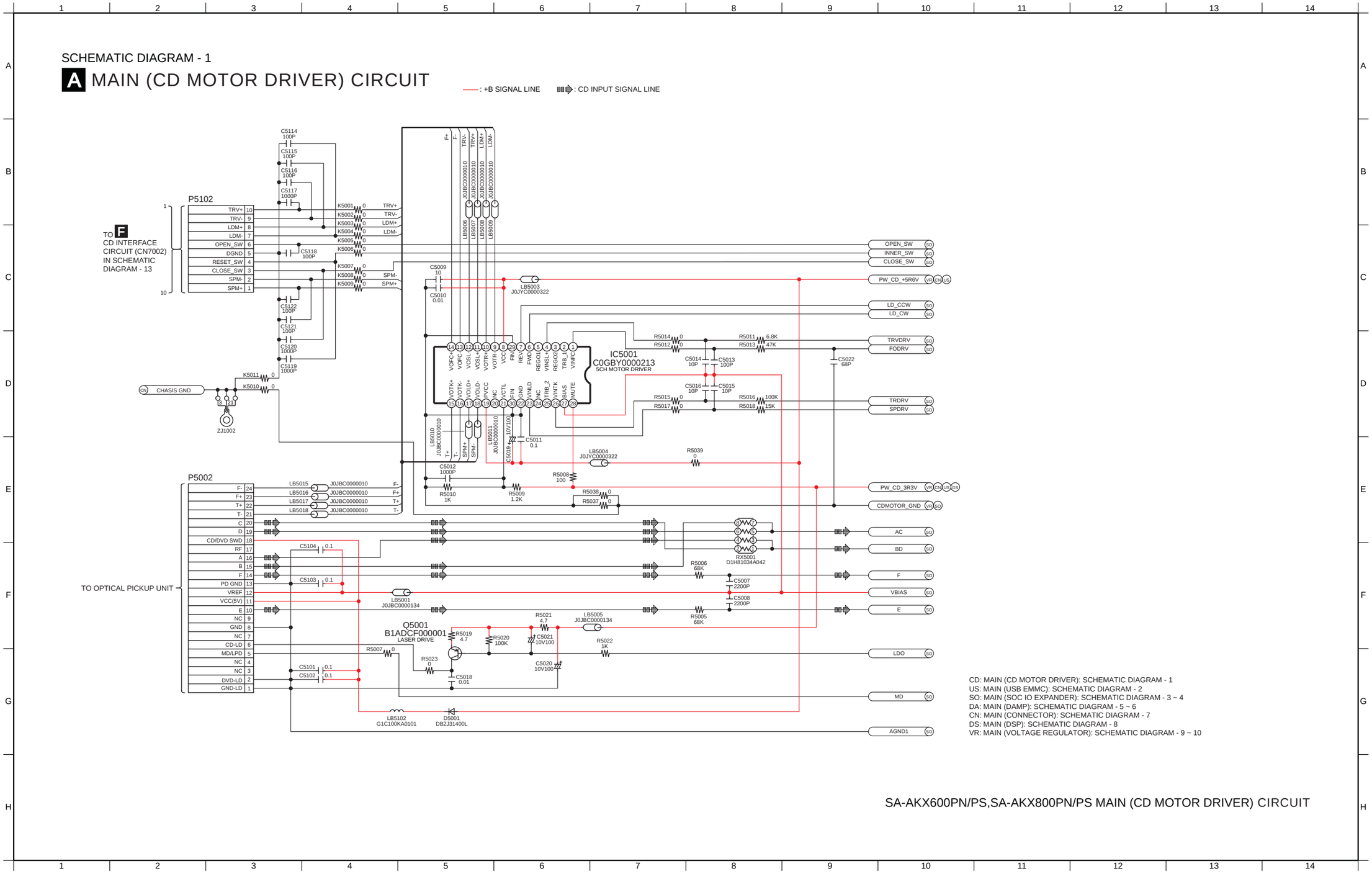

12.3. Main (USB EMMC) Circuit

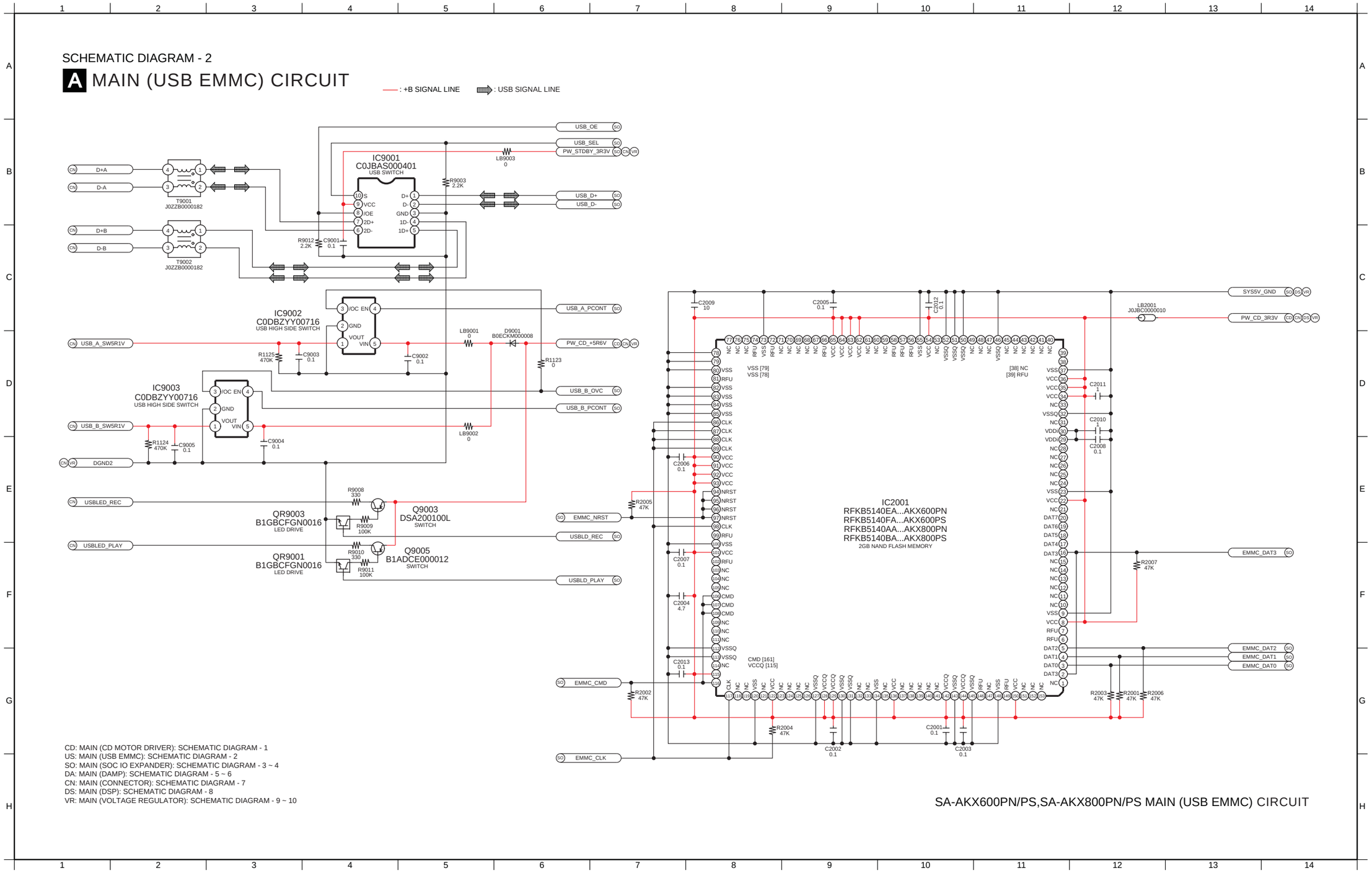

12.4. Main (SOC IO Expander) Circuit (1/2)

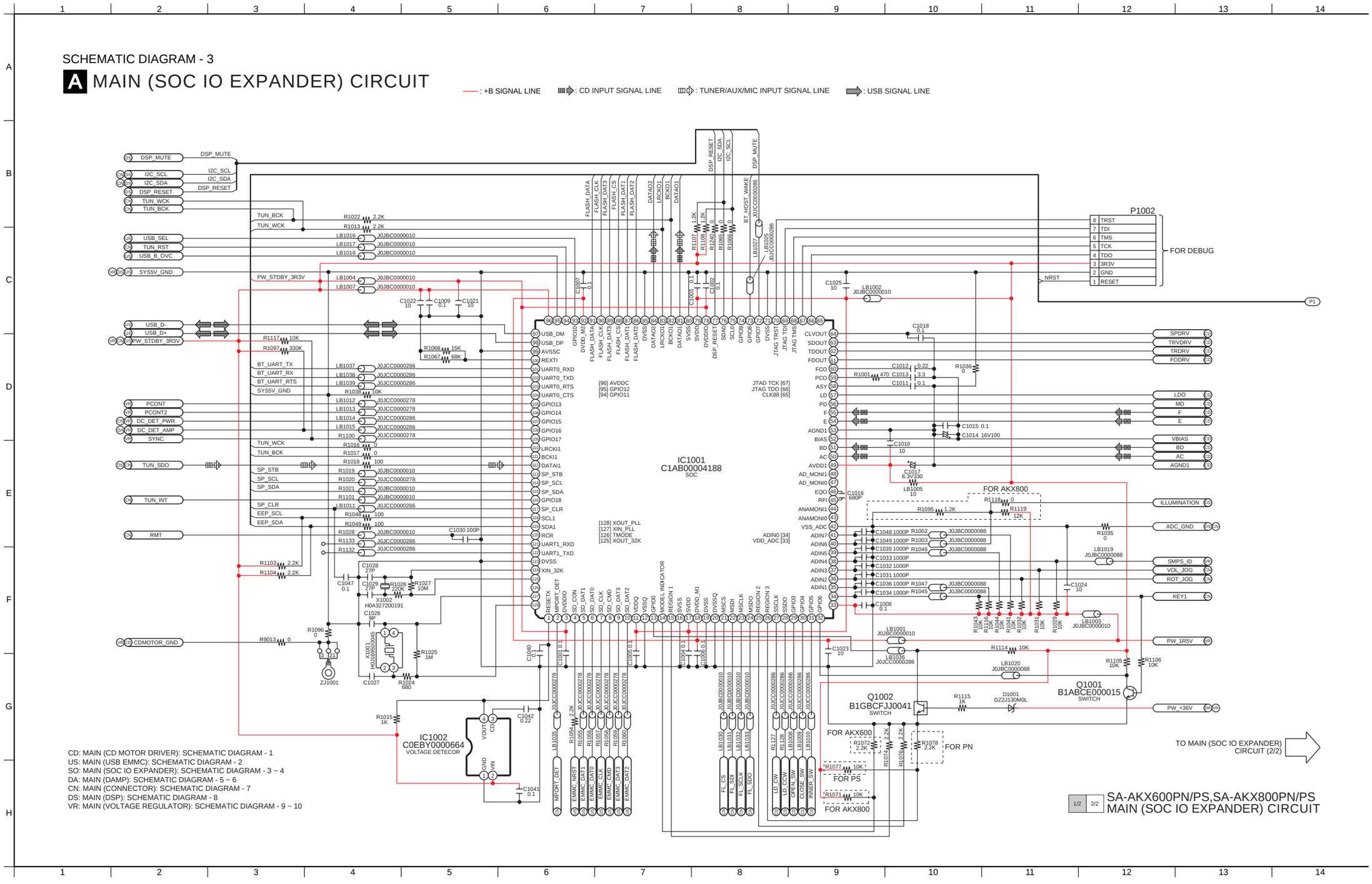

12.5. Main (SOC IO Expander) Circuit (2/2)

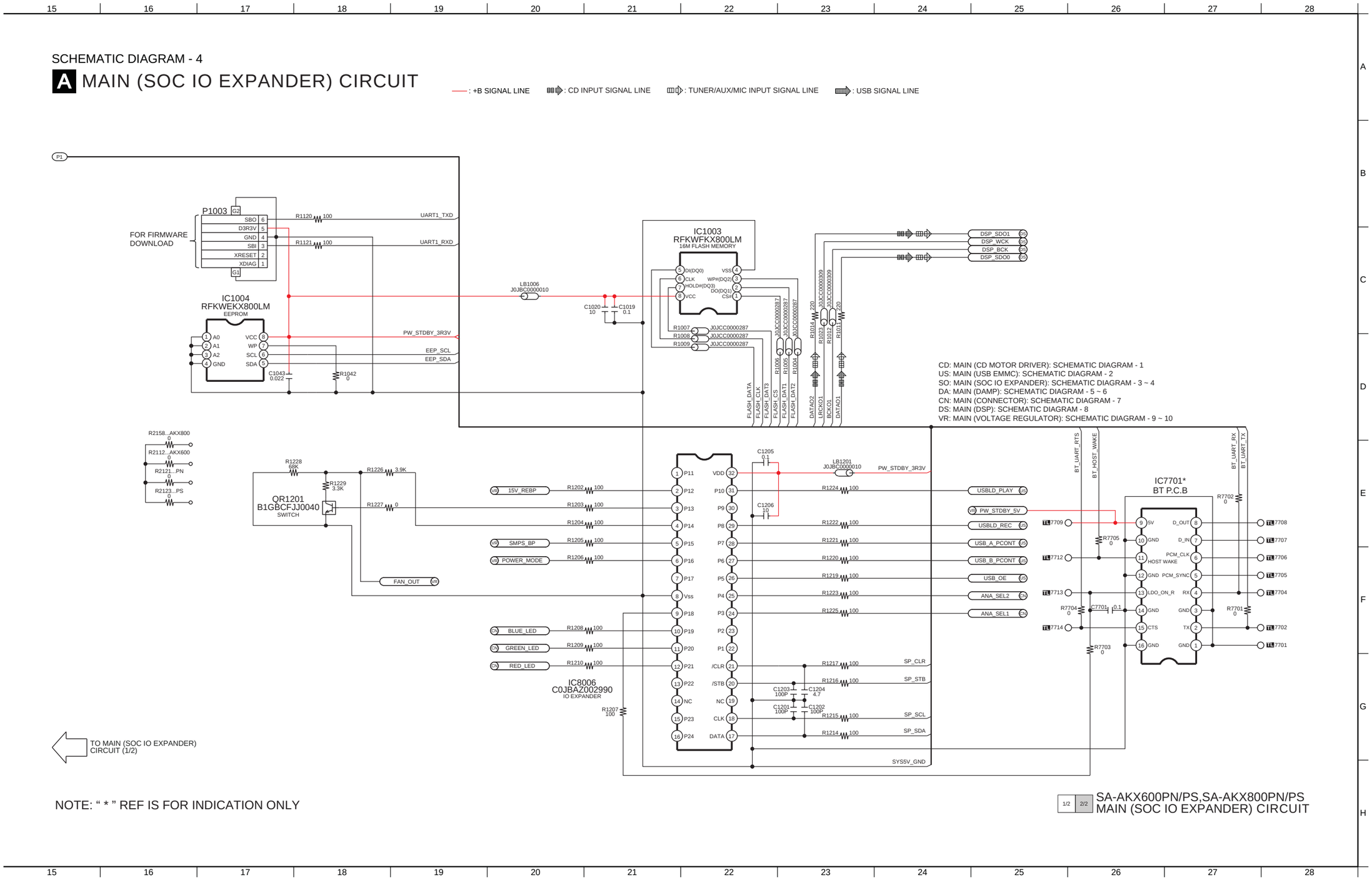

12.6. Main (Damp) Circuit (1/2)

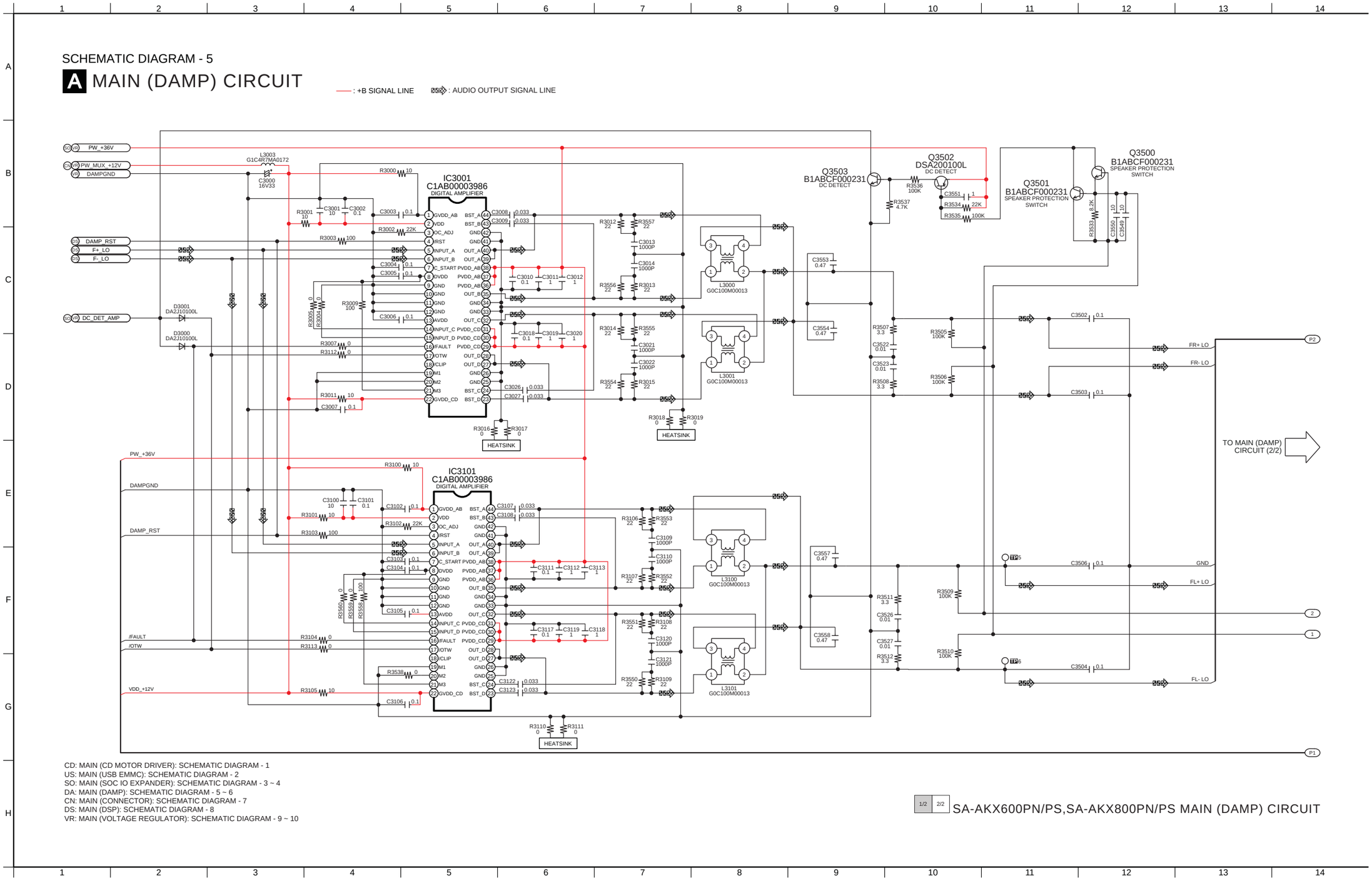

CD: MAIN (CD MOTOR DRIVER): SCHEMATIC DIAGRAM - 1
US: MAIN (USB EMMC): SCHEMATIC DIAGRAM - 2
SO: MAIN (SOC IO EXPANDER): SCHEMATIC DIAGRAM - 3 ~ 4
DA: MAIN (DAMP): SCHEMATIC DIAGRAM - 5 ~ 6
CN: MAIN (CONNECTOR): SCHEMATIC DIAGRAM - 7
DS: MAIN (DSP): SCHEMATIC DIAGRAM - 8
VR: MAIN (VOLTAGE REGULATOR): SCHEMATIC DIAGRAM - 9 ~ 10

1/2 2/2 SA-AKX600PN/PS,SA-AKX800PN/PS MAIN (DAMP) CIRCUIT

12.7. Main (Damp) Circuit (2/2)

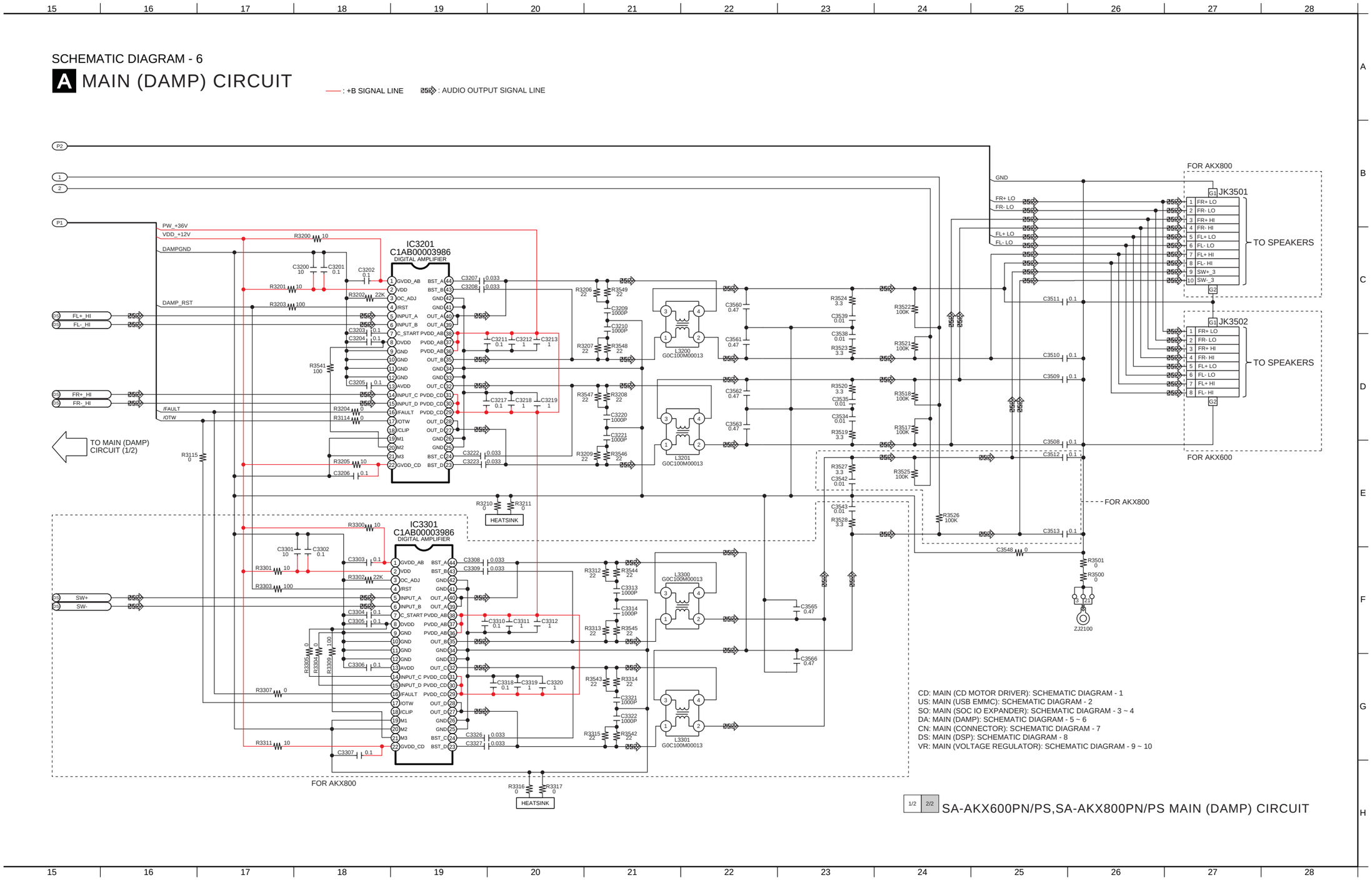

12.8. Main (Connector) Circuit

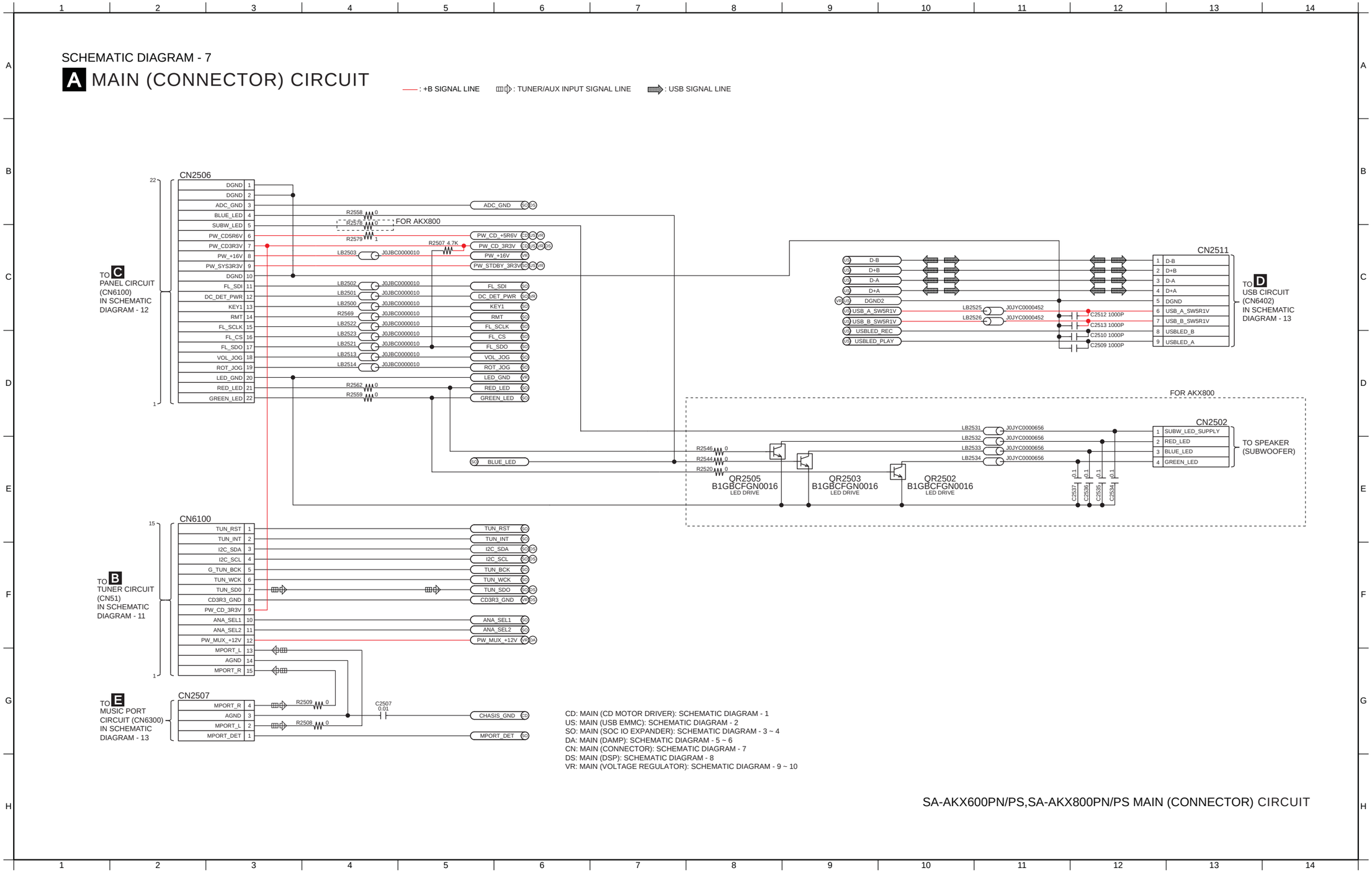

12.9. Main (DSP) Circuit

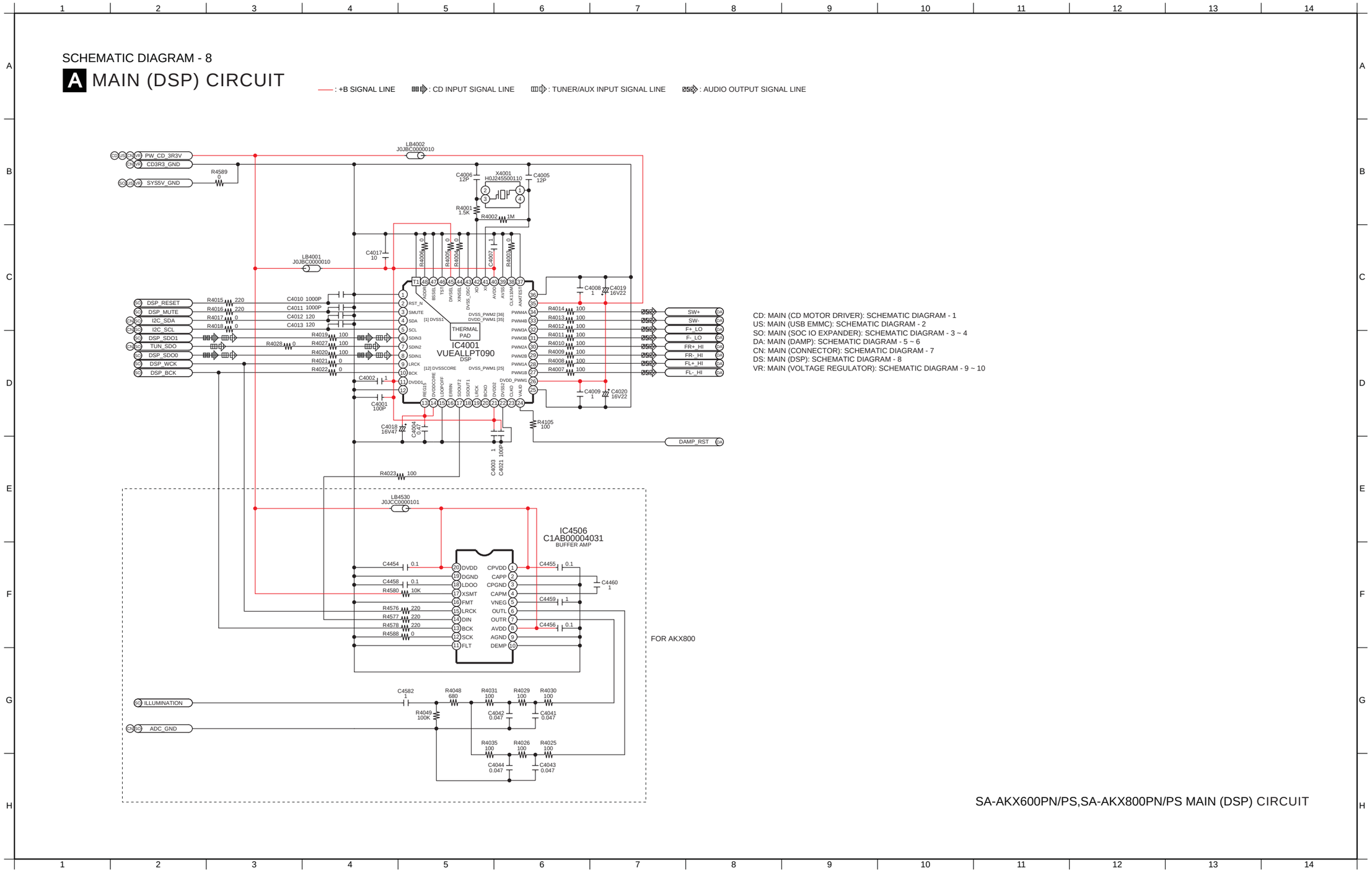

12.10. Main (VREG Fan) Circuit (1/2)

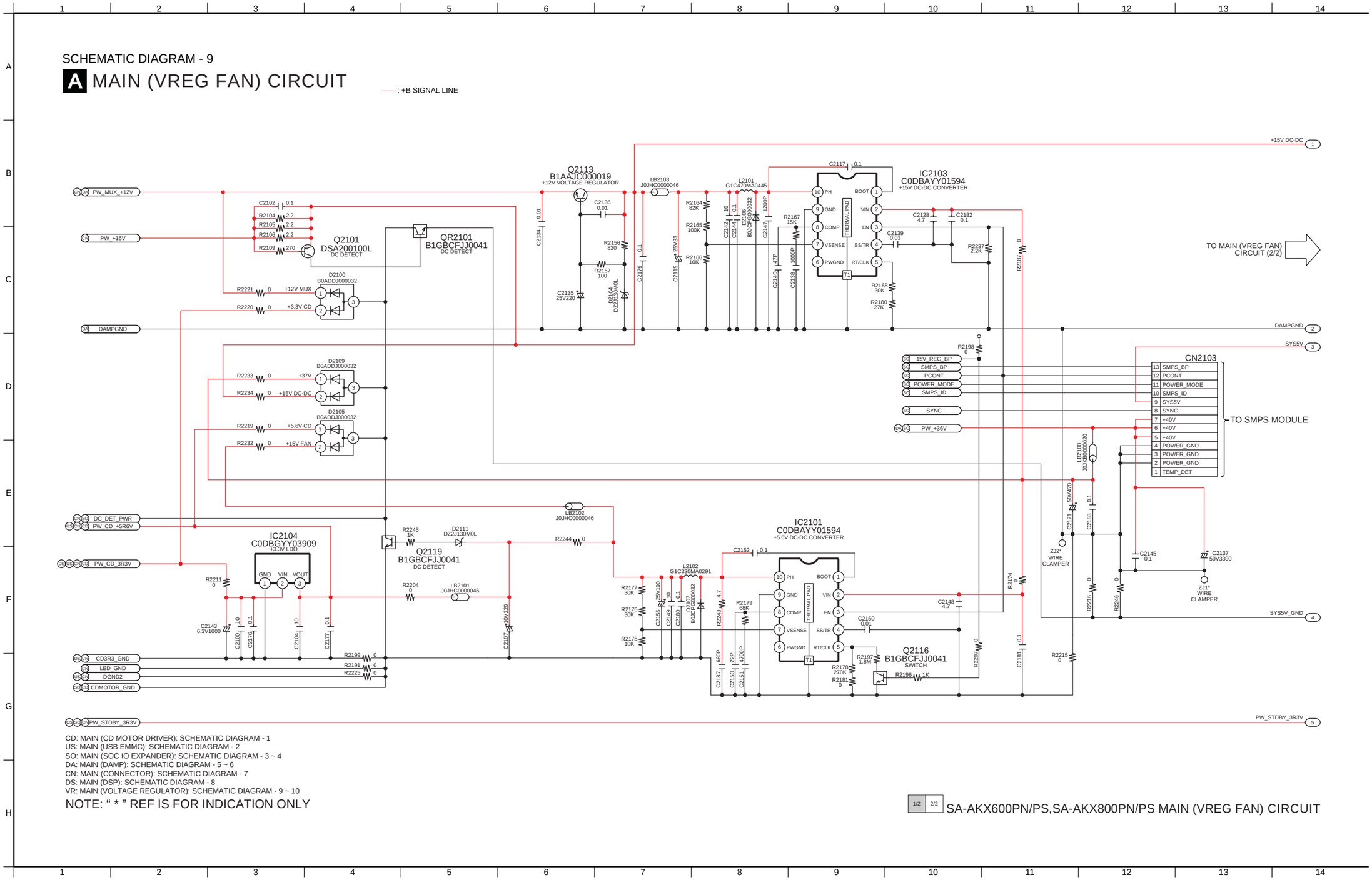

CD: MAIN (CD MOTOR DRIVER): SCHEMATIC DIAGRAM - 1
US: MAIN (USB EMMC): SCHEMATIC DIAGRAM - 2
SO: MAIN (SOC IO EXPANDER): SCHEMATIC DIAGRAM - 3 ~ 4
DA: MAIN (DAMP): SCHEMATIC DIAGRAM - 5 ~ 6
CN: MAIN (CONNECTOR): SCHEMATIC DIAGRAM - 7
DS: MAIN (DSP): SCHEMATIC DIAGRAM - 8
VR: MAIN (VOLTAGE REGULATOR): SCHEMATIC DIAGRAM - 9 ~ 10

NOTE: " * " REF IS FOR INDICATION ONLY

1/2 2/2 SA-AKX600PN/PS,SA-AKX800PN/PS MAIN (VREG FAN) CIRCUIT

12.11. Main (VREG Fan) Circuit (2/2)

SCHEMATIC DIAGRAM - 10

A MAIN (VREG FAN) CIRCUIT

—— : +B SIGNAL LINE

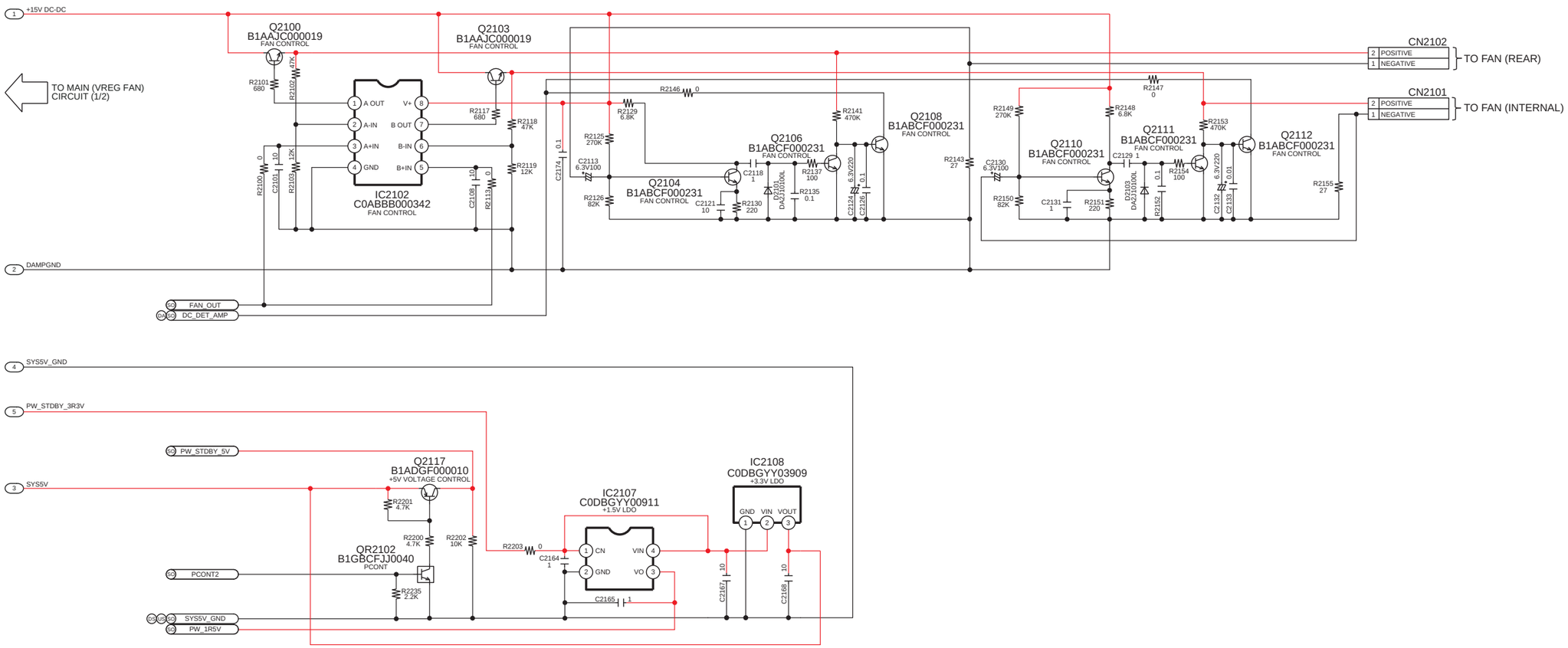

CD: MAIN (CD MOTOR DRIVER): SCHEMATIC DIAGRAM - 1
US: MAIN (USB EMMC): SCHEMATIC DIAGRAM - 2
SO: MAIN (SOC IO EXPANDER): SCHEMATIC DIAGRAM - 3 ~ 4
DA: MAIN (DAMP): SCHEMATIC DIAGRAM - 5 ~ 6
CN: MAIN (CONNECTOR): SCHEMATIC DIAGRAM - 7
DS: MAIN (DSP): SCHEMATIC DIAGRAM - 8
VR: MAIN (VOLTAGE REGULATOR): SCHEMATIC DIAGRAM - 9 ~ 10

1/2 2/2 SA-AKX600PN/PS,SA-AKX800PN/PS MAIN (VREG FAN) CIRCUIT

12.12. Tuner Circuit

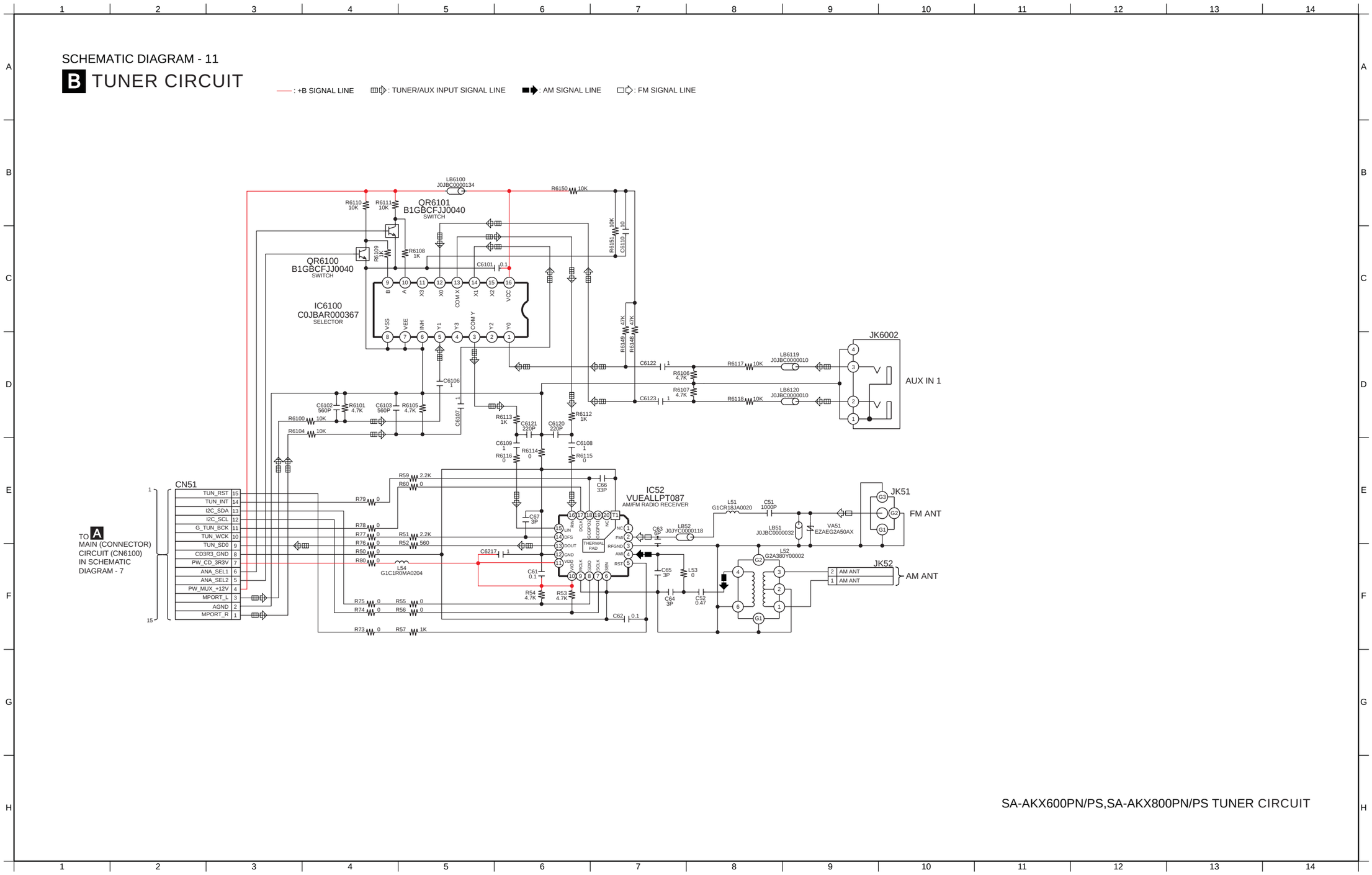

12.13. Panel Circuit

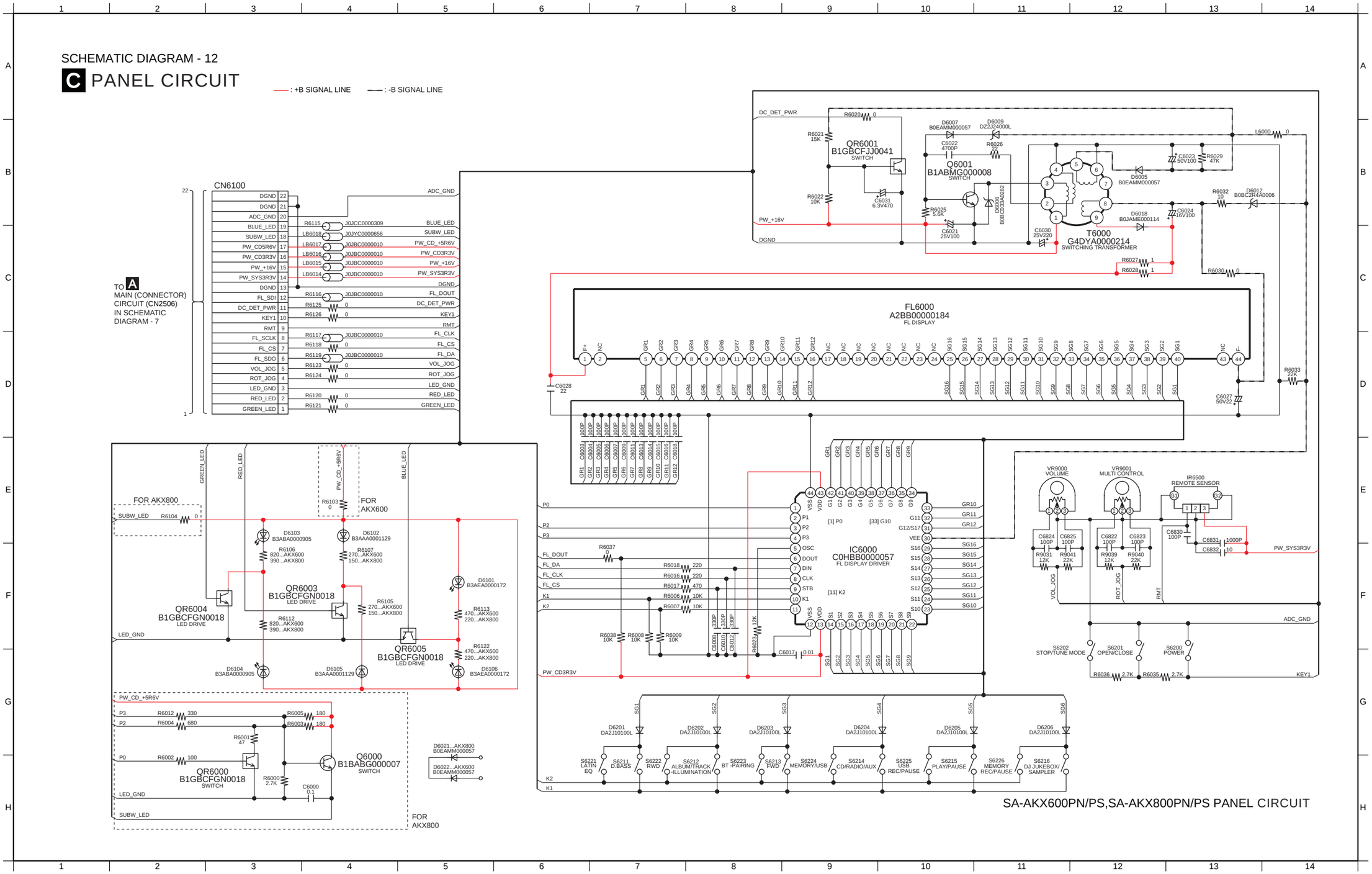

12.14. USB, CD Interface and Music Port Circuit

SCHEMATIC DIAGRAM - 13

D USB CIRCUIT

—— : +B SIGNAL LINE : USB SIGNAL LINE

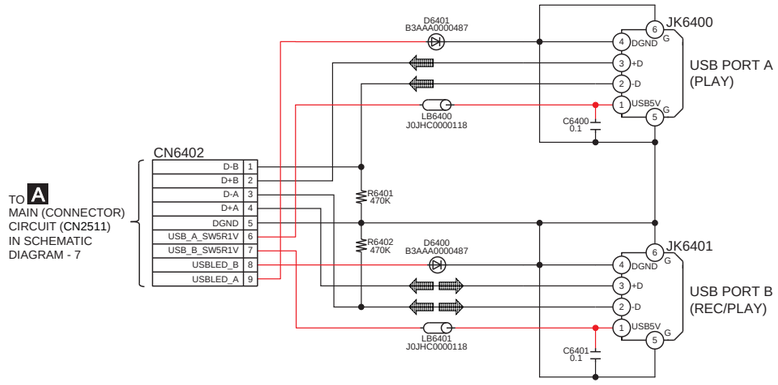

E MUSIC PORT CIRCUIT

: AUX INPUT SIGNAL LINE

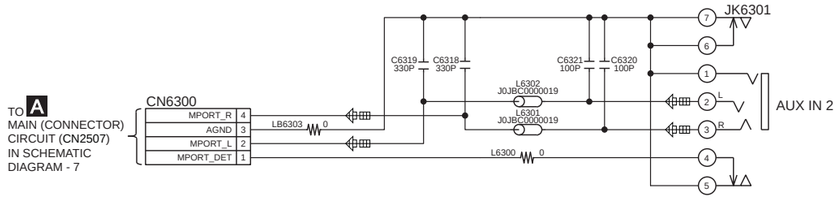

F CD INTERFACE CIRCUIT

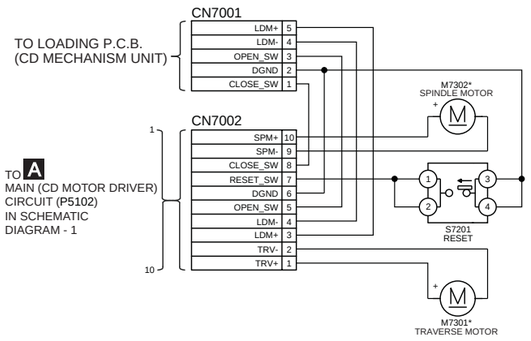

NOTE: " * " REF IS FOR INDICATION ONLY

SA-AKX600PN/PS,SA-AKX800PN/PS USB / MUSIC PORT / CD INTERFACE CIRCUIT

13 Printed Circuit Board

13.1. Main P.C.B. (Side A)

A MAIN P.C.B. (RFKB5140EA...AKX600PN) (RFKB5140AA...AKX800PN)
(RFKB5140FA...AKX600PS) (RFKB5140BA...AKX800PS)

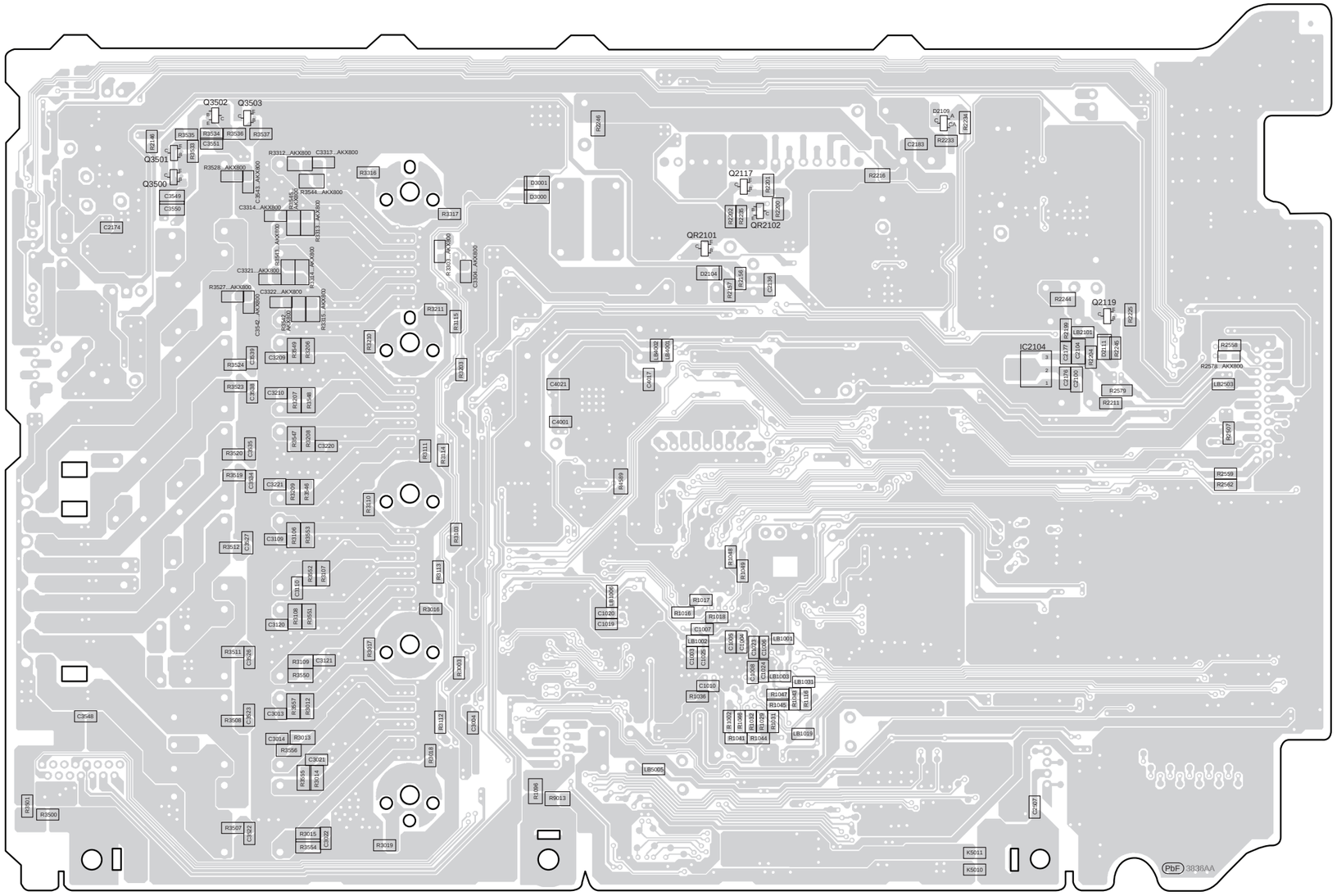

(SIDE A)

SA-AKX600PN/PS,SA-AKX800PN/PS
MAIN P.C.B.

13.2. Main P.C.B. (Side B)

A MAIN P.C.B. (RFKB5140EA...AKX600PN) (RFKB5140AA...AKX800PN)
(RFKB5140FA...AKX600PS) (RFKB5140BA...AKX800PS)

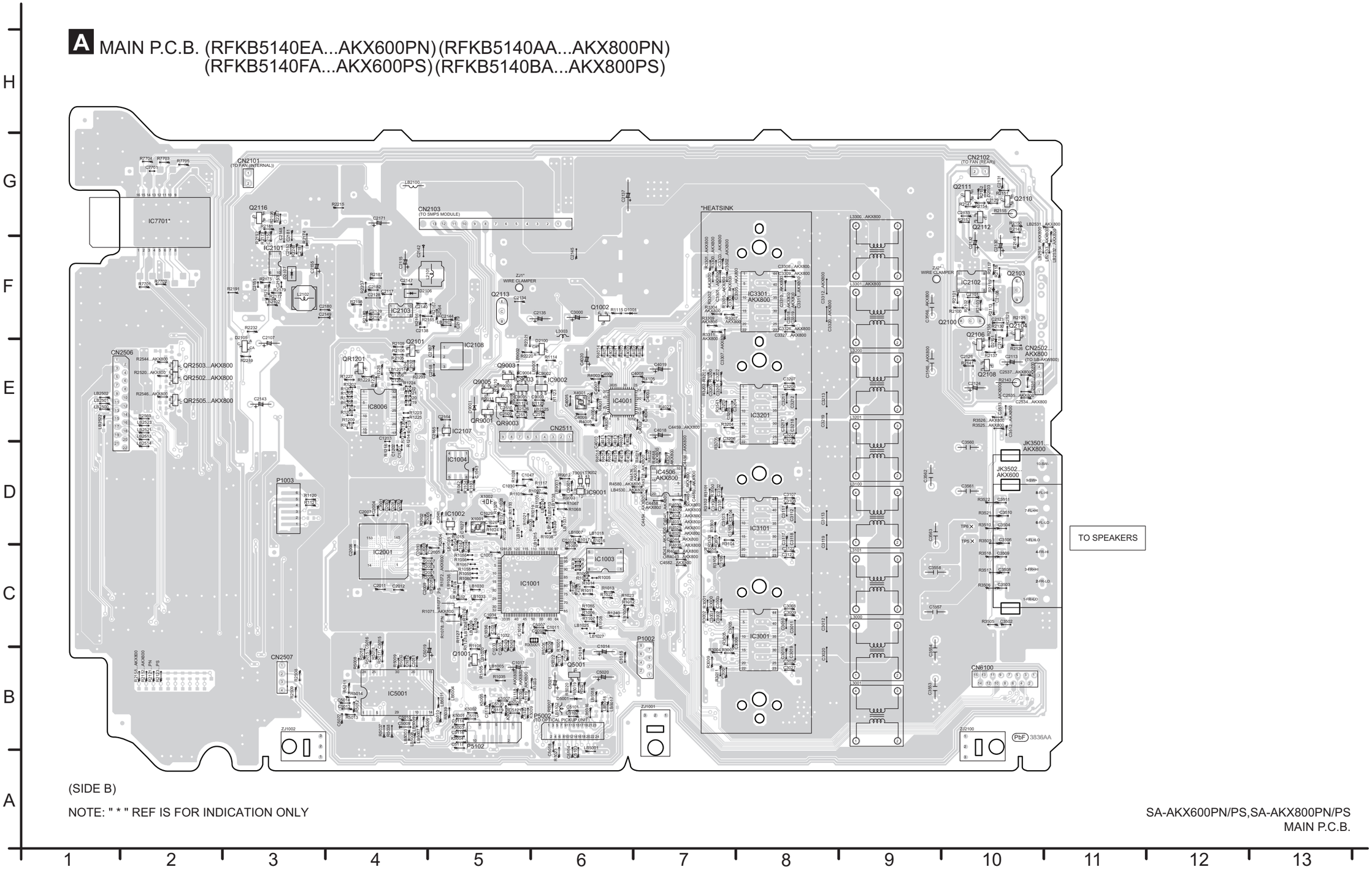

(SIDE B)

NOTE: " * " REF IS FOR INDICATION ONLY

SA-AKX600PN/PS,SA-AKX800PN/PS
MAIN P.C.B.

13.3. Tuner and CD Interface P.C.B.

B TUNER P.C.B. (REP5140EB...AKX600PN) (REP5140AB...AKX800PN)
(REP5140FB...AKX600PS) (REP5140BB...AKX800PS)

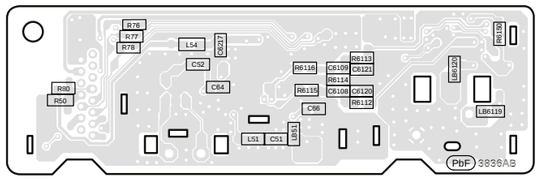

(SIDE A)

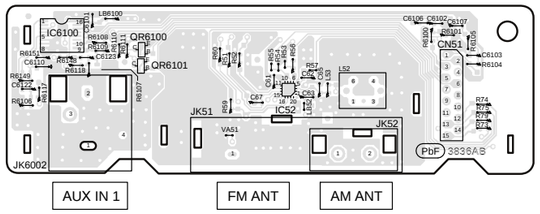

(SIDE B)

F CD INTERFACE P.C.B. (REP4945A)

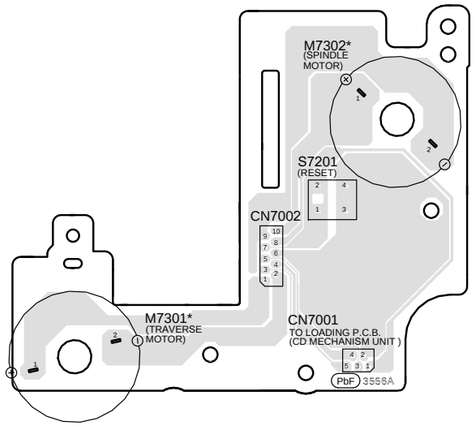

NOTE: " * " REF IS FOR INDICATION ONLY

SA-AKX600PN/PS,SA-AKX800PN/PS
TUNER / CD INTERFACE P.C.B.

13.4. Panel, USB and Music Port P.C.B.

C PANEL P.C.B. (REP5158BA...AKX600PN/PS)
(REP5158AA...AKX800PN/PS)

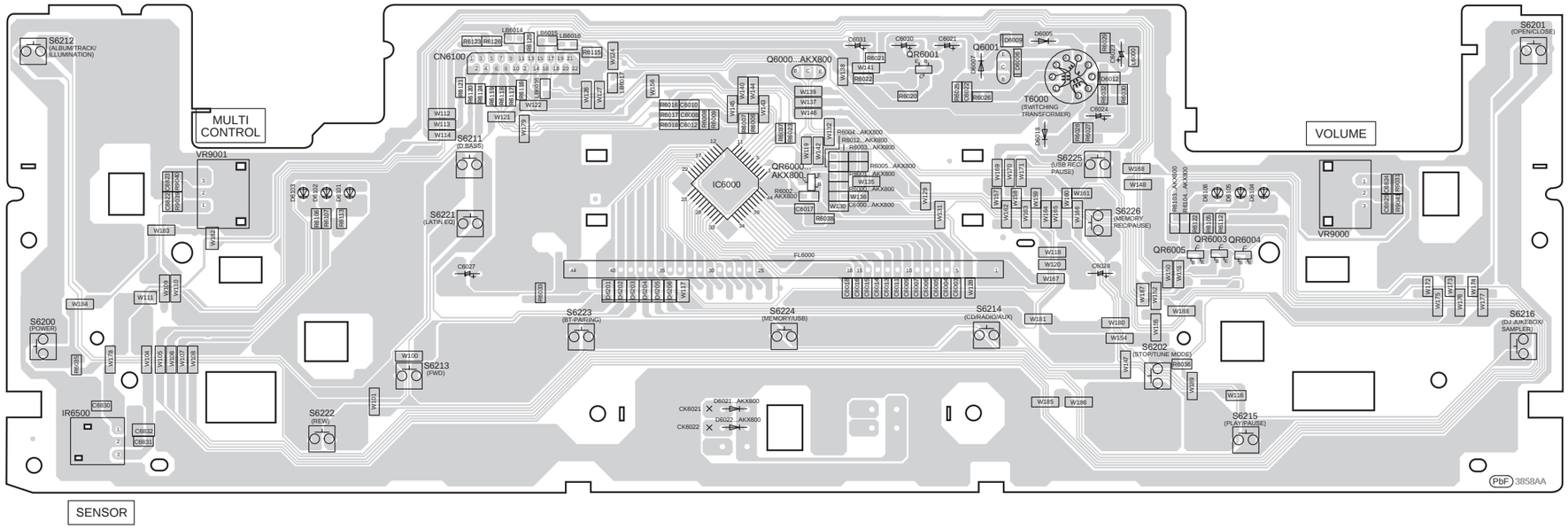

D USB P.C.B. (REP5158BB...AKX600PN/PS)
(REP5158AB...AKX800PN/PS)

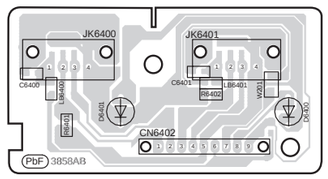

USB PORT A (PLAY)

USB PORT B (REC/PLAY)

E MUSIC PORT P.C.B. (REP5158BC...AKX600PN/PS)
(REP5158AC...AKX800PN/PS)

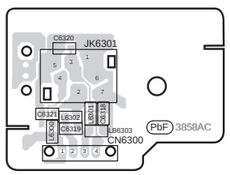

AUX IN 2

SA-AKX600PN/PS,SA-AKX800PN/PS
PANEL / USB / MUSIC PORT P.C.B.

14 Voltage and Waveform Measurement

14.1. Voltage Measurement

Note:

- Indication Voltage Values are in standard values for the unit measured by the DC electronic circuit tester (high-impedance) with the chassis taken as standard.
  Therefore, there may exist some errors in voltage values, depending on the internal impedance of the DC circuit tester.
- Circuit voltage and waveform described herein shall be regarded as reference information when probing defect point because it may differ from actual measuring value due to difference of Measuring instrument and its measuring condition and product itself.

14.1.1. Main P.C.B. (1/3)

REF NO.	IC1002																			
MODE	1	2	3	4	5															
PLAY	3.3	3.3	0	0	1.9															
STANDBY	3.3	3.3	0	0	1.9															

REF NO.	IC2101																			
MODE	1	2	3	4	5	6	7	8	9	10										
PLAY	10.9	39.5	3.1	2.1	0.5	0	0.8	0.7	0	5.6										
STANDBY	10.9	39.5	3.1	2.1	0.5	0	0.8	0.7	0	5.6										

REF NO.	IC2102																			
MODE	1	2	3	4	5	6	7	8												
PLAY	8.6	1.6	1.6	0	1.6	1.6	8.6	15.3												
STANDBY	8.6	1.6	1.6	0	1.6	1.6	8.6	15.3												

REF NO.	IC2103																			
MODE	1	2	3	4	5	6	7	8	9	10										
PLAY	21.3	39.5	3.1	2.1	0.5	0	0.8	0.7	0	15.2										
STANDBY	21.3	39.5	3.1	2.1	0.5	0	0.8	0.7	0	15.2										

REF NO.	IC2104																			
MODE	1	2	3																	
PLAY	0	3.3	5.5																	
STANDBY	0	3.3	5.5																	

REF NO.	IC2107																			
MODE	1	2	3	4																
PLAY	3.3	0	1.6	3.3																
STANDBY	3.3	0	1.6	3.3																

REF NO.	IC2108																			
MODE	1	2	3																	
PLAY	0	3.3	5																	
STANDBY	0	3.3	5																	

REF NO.	IC3001																			
MODE	1	2	3	4	5	6	7	8	9	10	11	12	13	14	15	16	17	18	19	20
PLAY	12.2	12.1	1.2	0	1.7	1.7	3.3	0	0	0	0	0	7.8	3.3	0	3.3	3.3	0	0	0
STANDBY	12.2	12.1	1.2	0	1.7	1.7	3.3	0	0	0	0	0	7.8	3.3	0	3.3	3.3	0	0	0

REF NO.	IC3001																			
MODE	21	22	23	24	25	26	27	28	29	30	31	32	33	34	35	36	37	38	39	40
PLAY	3.3	12	30.1	30.1	0	0	19	19	39.5	39.5	39.5	19	0	0	19	39.5	39.5	39.5	19	19
STANDBY	3.3	12	30.1	30.1	0	0	19	19	39.5	39.5	39.5	19	0	0	19	39.5	39.5	39.5	19	19

REF NO.	IC3001																			
MODE	41	42	43	44																
PLAY	0	0	30.1	30																
STANDBY	0	0	30.1	30																

SA-AKX600PN/PS, AKX800PN/PS MAIN P.C.B.

14.1.2. Main P.C.B. (2/3)

REF NO.	IC3101																			
MODE	1	2	3	4	5	6	7	8	9	10	11	12	13	14	15	16	17	18	19	20
PLAY	12.2	12.1	1.2	0	1.7	1.7	3.3	0	0	0	0	0	7.8	3.3	0	3.3	3.3	0	0	0
STANDBY	12.2	12.1	1.2	0	1.7	1.7	3.3	0	0	0	0	0	7.8	3.3	0	3.3	3.3	0	0	0

REF NO.	IC3101																			
MODE	21	22	23	24	25	26	27	28	29	30	31	32	33	34	35	36	37	38	39	40
PLAY	3.3	12	30.1	30.1	0	0	19	19	39.5	39.5	39.5	19	0	0	19	39.5	39.5	39.5	19	19
STANDBY	3.3	12	30.1	30.1	0	0	19	19	39.5	39.5	39.5	19	0	0	19	39.5	39.5	39.5	19	19

REF NO.	IC3101																			
MODE	41	42	43	44																
PLAY	0	0	30.1	30																
STANDBY	0	0	30.1	30																

REF NO.	IC3201																			
MODE	1	2	3	4	5	6	7	8	9	10	11	12	13	14	15	16	17	18	19	20
PLAY	12.2	12.1	1.2	0	1.7	1.7	3.3	0	0	0	0	0	7.8	3.3	0	3.3	3.3	0	0	0
STANDBY	12.2	12.1	1.2	0	1.7	1.7	3.3	0	0	0	0	0	7.8	3.3	0	3.3	3.3	0	0	0

REF NO.	IC3201																			
MODE	21	22	23	24	25	26	27	28	29	30	31	32	33	34	35	36	37	38	39	40
PLAY	3.3	12	30.1	30.1	0	0	19	19	39.5	39.5	39.5	19	0	0	19	39.5	39.5	39.5	19	19
STANDBY	3.3	12	30.1	30.1	0	0	19	19	39.5	39.5	39.5	19	0	0	19	39.5	39.5	39.5	19	19

REF NO.	IC3201																			
MODE	41	42	43	44																
PLAY	0	0	30.1	30																
STANDBY	0	0	30.1	30																

REF NO.	IC3301																			
MODE	1	2	3	4	5	6	7	8	9	10	11	12	13	14	15	16	17	18	19	20
PLAY	12.2	12.1	1.2	0	1.7	1.7	3.3	0	0	0	0	0	7.8	3.3	0	3.3	3.3	0	0	0
STANDBY	12.2	12.1	1.2	0	1.7	1.7	3.3	0	0	0	0	0	7.8	3.3	0	3.3	3.3	0	0	0

REF NO.	IC3301																			
MODE	21	22	23	24	25	26	27	28	29	30	31	32	33	34	35	36	37	38	39	40
PLAY	3.3	12	30.1	30.1	0	0	19	19	39.5	39.5	39.5	19	0	0	19	39.5	39.5	39.5	19	19
STANDBY	3.3	12	30.1	30.1	0	0	19	19	39.5	39.5	39.5	19	0	0	19	39.5	39.5	39.5	19	19

REF NO.	IC3301																			
MODE	41	42	43	44																
PLAY	0	0	30.1	30																
STANDBY	0	0	30.1	30																

REF NO.	IC4506																			
MODE	1	2	3	4	5	6	7	8	9	10	11	12	13	14	15	16	17	18	19	20
PLAY	3.3	1.7	0	-1.6	-3.2	0	0	3.3	0	0	0	0	1.6	1.3	1.7	0	3.3	1.9	0	3.3
STANDBY	3.3	1.7	0	-1.6	-3.2	0	0	3.3	0	0	0	0	1.6	1.3	1.7	0	3.3	1.9	0	3.3

REF NO.	IC5001																			
MODE	1	2	3	4	5	6	7	8	9	10	11	12	13	14	15	16	17	18	19	20
PLAY	1.6	5.5	0	1.6	2.9	0	0	5.6	0	0	2.9	2.8	2.8	2.9	2.9	2.9	3.3	2.4	5.5	2.2
STANDBY	1.6	5.5	0	1.6	2.9	0	0	5.6	0	0	2.9	2.8	2.8	2.9	2.9	2.9	3.3	2.4	5.5	2.2

REF NO.	IC5001																			
MODE	21	22	23	24	25	26	27	28	29	30										
PLAY	1.5	0	1.8	5.5	5.5	1.6	1.6	3.3	0	0										
STANDBY	1.5	0	1.8	5.5	5.5	1.6	1.6	3.3	0	0										

SA-AKX600PN/PS, AKX800PN/PS MAIN P.C.B.

14.1.3. Main P.C.B. (3/3)

REF NO.	IC6100																			
MODE	1	2	3	4	5	6	7	8	9	10	11	12	13	14	15	16				
PLAY	0	0	0	0	0	0	0	0	12.5	12.5	0	0	0	0	0	12.5				
STANDBY	0	0	0	0	0	0	0	0	12.5	12.5	0	0	0	0	0	12.5				

REF NO.	IC8006																			
MODE	1	2	3	4	5	6	7	8	9	10	11	12	13	14	15	16	17	18	19	20
PLAY	0	0	3.3	3.3	0	0	0	0	3.3	3.3	0	0	0	0	0	0	0	3.3	0	3.3
STANDBY	0	0	3.3	3.3	0	0	0	0	3.3	3.3	0	0	0	0	0	0	0	3.3	0	3.3

REF NO.	IC8006																			
MODE	21	22	23	24	25	26	27	28	29	30	31	32								
PLAY	3.3	0	0	0	0	0	0	0	0	0	0	3.3								
STANDBY	3.3	0	0	0	0	0	0	0	0	0	0	3.3								

REF NO.	IC9001																			
MODE	1	2	3	4	5	6	7	8	9	10										
PLAY	0	0	0	0	0	1	1.4	0	3.3	0										
STANDBY	0	0	0	0	0	1	1.4	0	3.3	0										

REF NO.	IC9002																			
MODE	1	2	3	4	5															
PLAY	0	0	3.3	0	5.1															
STANDBY	0	0	3.3	0	5.1															

REF NO.	IC9003																			
MODE	1	2	3	4	5															
PLAY	5.1	0	3.3	3.3	5.1															
STANDBY	5.1	0	3.3	3.3	5.1															

REF NO.	Q1001				Q1002				Q2100				Q2101				Q2103			
MODE	E	C	B		E	C	B		E	C	B		E	C	B		E	C	B	
PLAY	0	0	0.6		0	0	23.9		7.9	15.3	8.5		15.3	0	15.3		7.8	15.3	8.4	
STANDBY	0	0	0.6		0	0	23.9		7.9	15.3	8.5		15.3	0	15.3		7.8	15.3	8.4	

REF NO.	Q2104				Q2106				Q2108				Q2110				Q2111			
MODE	E	C	B		E	C	B		E	C	B		E	C	B		E	C	B	
PLAY	0.2	11.1	0.2		0	0	0.7		0	3.2	0		0.4	5.1	1		0	0	0.3	
STANDBY	0.2	11.1	0.2		0	0	0.7		0	3.2	0		0.4	5.1	1		0	0	0.3	

REF NO.	Q2112				Q2113				Q2116				Q2117				Q2119			
MODE	E	C	B		E	C	B		E	C	B		E	C	B		E	C	B	
PLAY	0	3.2	0		12.5	15.3	13.1		0	0.4	0		5	5	0		0	3.3	0	
STANDBY	0	3.2	0		12.5	15.3	13.1		0	0.4	0		5	5	0		0	3.3	0	

REF NO.	Q3500				Q3501				Q3502				Q3503				Q5001			
MODE	E	C	B		E	C	B		E	C	B		E	C	B		E	C	B	
PLAY	19.7	39	19.7		19.7	39	19.7		39.5	0	39.4		0	3.2	0		2.9	1.9	2.2	
STANDBY	19.7	39	19.7		19.7	39	19.7		39.5	0	39.4		0	3.2	0		2.9	1.9	2.2	

REF NO.	Q9003				Q9005				QR1201				QR2101				QR2102			
MODE	E	C	B		E	C	B		E	C	B		E	C	B		E	C	B	
PLAY	5.5	0	5.1		5.5	0	5.1		0	0	3.3		0	3.3	0		0	0	3.1	
STANDBY	5.5	0	5.1		5.5	0	5.1		0	0	3.3		0	3.3	0		0	0	3.1	

REF NO.	QR2502				QR2503				QR2505											
MODE	E	C	B		E	C	B		E	C	B									
PLAY	0	0	3.3		0	0	1.2		0	1	0									
STANDBY	0	0	3.3		0	0	1.2		0	1	0									

SA-AKX600PN/PS, AKX800PN/PS MAIN P.C.B.

14.1.4. Panel P.C.B.

REF NO.	IC6000																			
MODE	1	2	3	4	5	6	7	8	9	10	11	12	13	14	15	16	17	18	19	20
POWER	0	0	0	0	1.9	3.3	1.3	0	2.9	0	0	0	3.3	-15.9	-15.9	-19.6	-23.3	-21.4	-23.3	-21.4
STANDBY	0	0	0	0	1.9	3.3	1.3	0	2.9	0	0	0	3.3	-15.9	-15.9	-19.6	-23.3	-21.4	-23.3	-21.4

REF NO.	IC6000																			
MODE	21	22	23	24	25	26	27	28	29	30	31	32	33	34	35	36	37	38	39	40
POWER	-23.3	-23.3	-21.4	-23.3	-15.9	-19.6	-15.9	-21.4	-23.3	-23.7	-22	-21.6	-21.4	-21.4	-21.4	-21.4	-21.4	-21.4	-21.4	-21.4
STANDBY	-23.3	-23.3	-21.4	-23.3	-15.9	-19.6	-15.9	-21.4	-23.3	-23.7	-22	-21.6	-21.4	-21.4	-21.4	-21.4	-21.4	-21.4	-21.4	-21.4

REF NO.	IC6000																			
POWER	41	42	43	44																
CD PLAY	-21.5	-21.8	3.3	0																
STANDBY	-21.5	-21.8	3.3	0																

REF NO.	Q6001				QR6001				QR6003				QR6004				QR6005			
MODE	E	C	B		E	C	B		E	C	B		E	C	B		E	C	B	
PLAY	0	15.5	0		0	3.3	0		0	0	3.2		0	4.3	0		0	0	1.2	
STANDBY	0	15.5	0		0	3.3	0		0	0	3.2		0	4.3	0		0	0	1.2	

SA-AKX600PN/PS, AKX800PN/PS PANEL P.C.B.

14.2. Waveform Chart

WF No. IC3001-5,6 (PLAY) 4.4Vp-p(1usec/div)	WF No. IC3001-27,32,35,39 (PLAY) 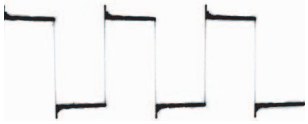 75Vp-p(1usec/div)	WF No. IC3101-5,6 (PLAY) 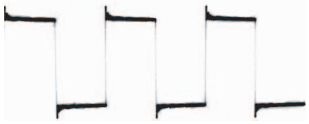 4.4Vp-p(1usec/div)	WF No. IC3101-27,32,35,39 (PLAY) 75Vp-p(1usec/div)
WF No. IC3201-5,6,14,15 (PLAY) 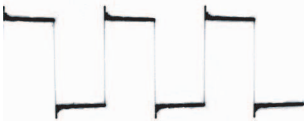 4.4Vp-p(1usec/div)	WF No. IC3201-27,32,35,39 (PLAY) 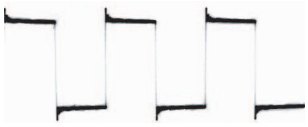 75Vp-p(1usec/div)	WF No. IC3301-5,6 (PLAY) 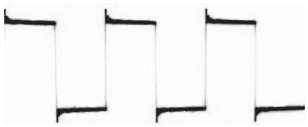 4.4Vp-p(1usec/div)	WF No. IC3301-27,32,35,39 (PLAY) 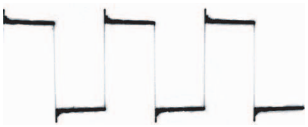 75Vp-p(1usec/div)

15 Exploded View and Replacement Parts List

15.1. Cabinet Parts Location 1

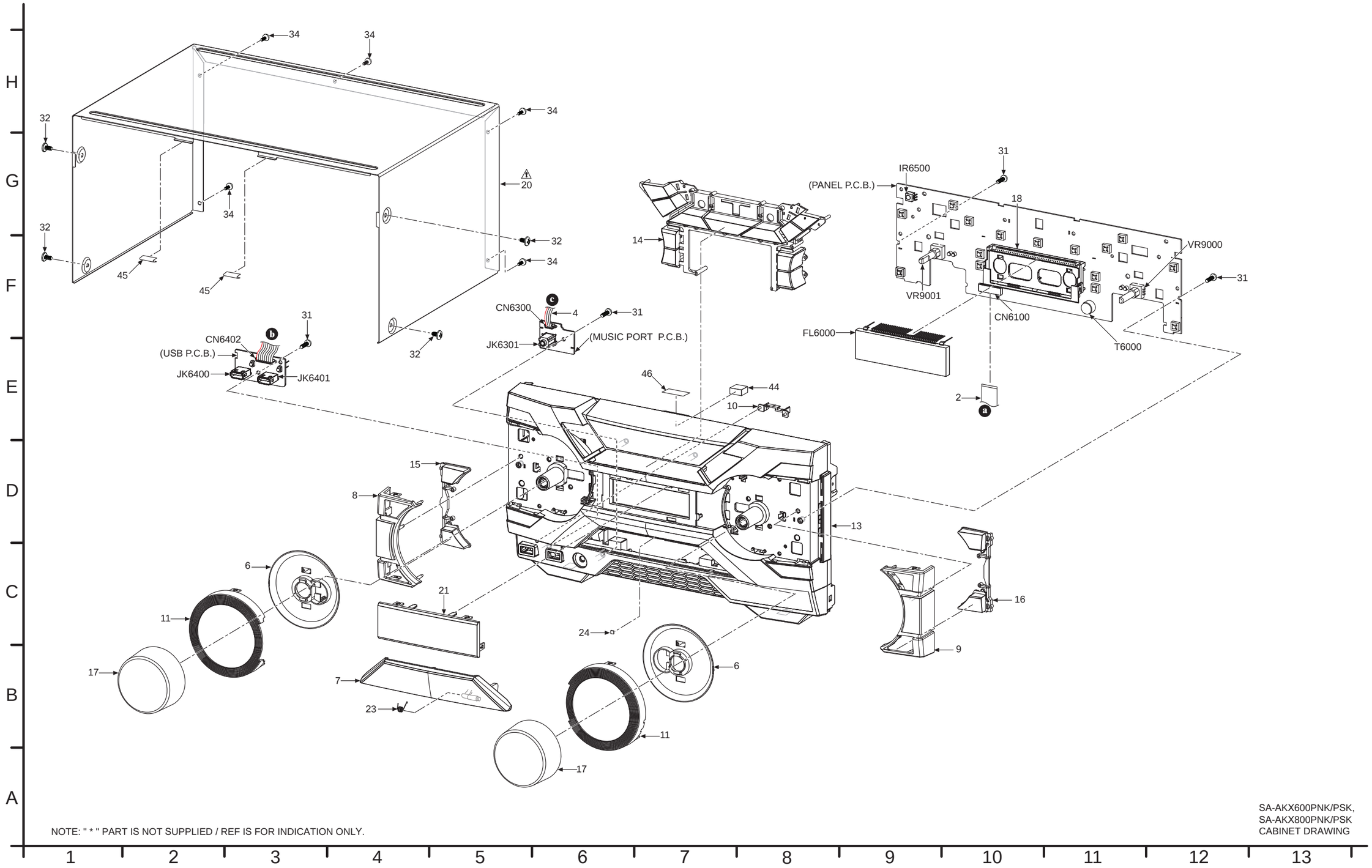

15.2. Cabinet Parts Location 2

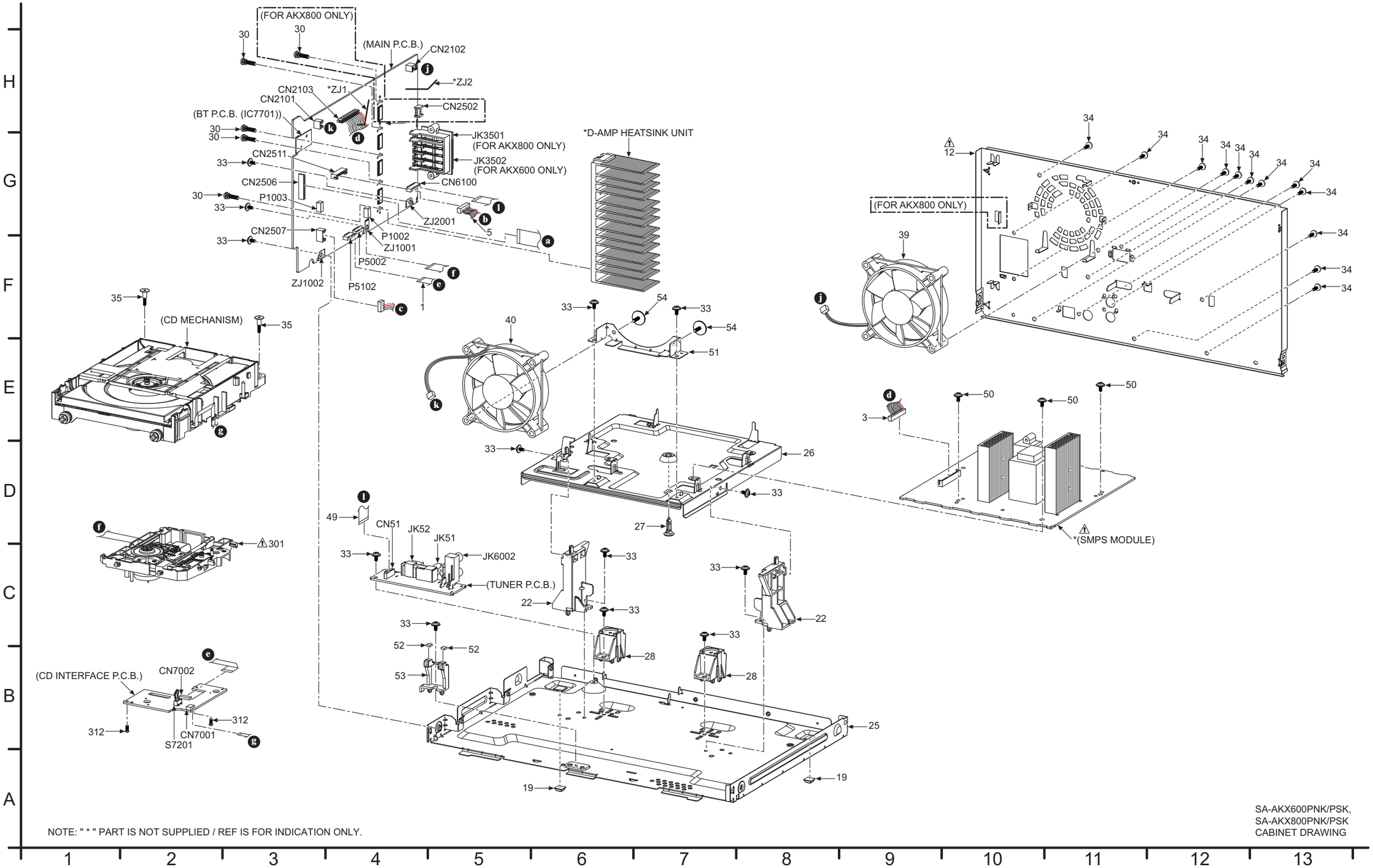

NOTE: " * " PART IS NOT SUPPLIED / REF IS FOR INDICATION ONLY.

SA-AKX600PNK/PSK,
SA-AKX800PNK/PSK
CABINET DRAWING

15.3. Packaging (For SC-AKX600PN/PS)

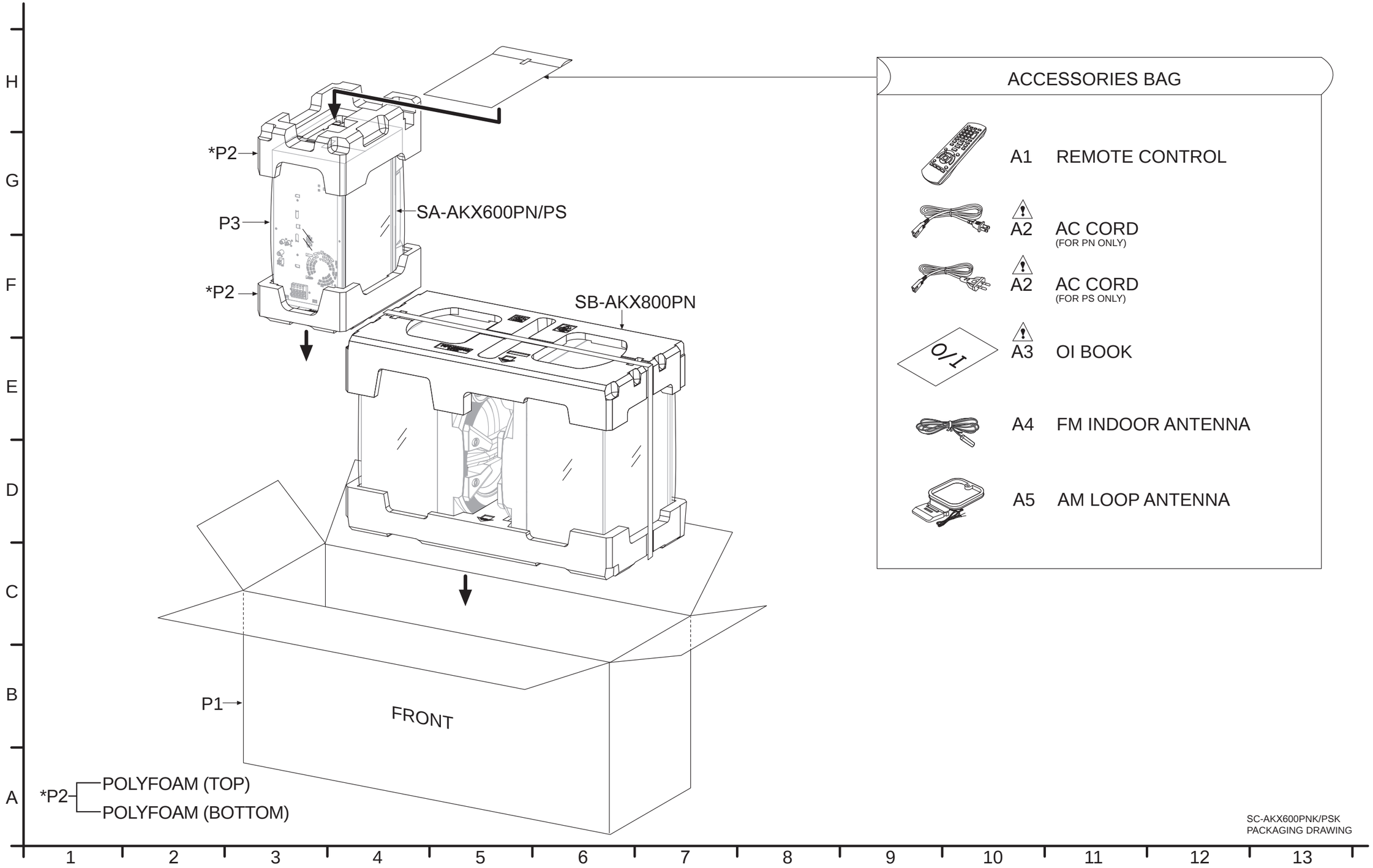

15.4. Packaging (For SC-AKX800PN/PS)

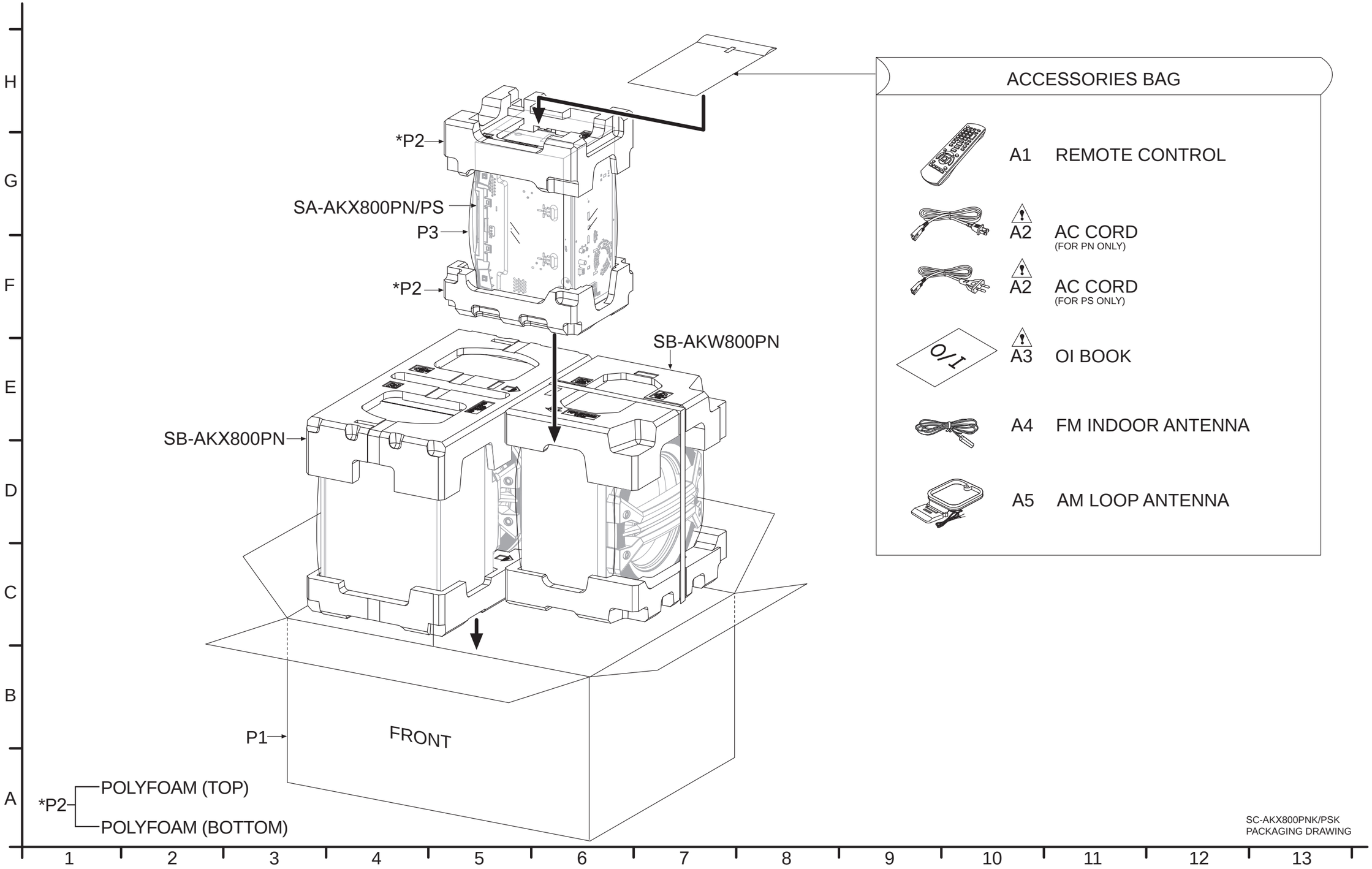

15.5. Mechanical Replacement Part List

Important Safety Notice

Components identified by ⚠ mark have special characteristics important for safety.
When replacing any of these components, use only manufacturer's specified parts.

RTL (Retention Time Limited)

Note: The marking (RTL) indicates that the Retention Time is Limited for this item.
After the discontinuation of this assembly in production, the item will continue to be available for a specific period of time. The retention period of availability is dependant on the type of assembly, and in accordance with the laws governing part and product retention. After the end of this period, the assembly will no longer be available.

Note:
- When replacing any of these components, be sure to use only manufacturer's specified parts shown in the replacement part list.
- The parenthesized indications on the Remarks column specify the destination & product color (Refer to the cover page for the information).
- Parts without these indications shall be used for all areas.
- This product uses a laser diode. Refer to "Precaution of Laser Diode".
- All parts mentioned are supplied by PAVCJM unless indicated likewise.
- Reference for O/I book languages are as follows:

Ar:	Arabic	Du:	Dutch	It:	Italian	Sp:	Spanish
Cf:	Canadian French	En:	English	Ko:	Korean	Sw:	Swedish
Cz:	Czech	Fr:	French	Po:	Polish	Co:	Traditional Chinese
Da:	Danish	Ge:	German	Ru:	Russian	Cn:	Simplified Chinese
Pe:	Persian	Ur:	Ukraine	Pr:	Portuguese	Fi:	Finnish

Safety	Ref. No.	Part No.	Part Name & Description	Qty	Remarks
			CABINET AND CHASSIS		
	1	REE1730	10P FFC (MAIN-CD INTEFACE)	1	
	2	REE2035	22P FFC (PANEL-MAIN)	1	
	3	REX1687	13P WIRE (MAIN-SMPS)	1	
	4	REX1840	4P WIRE (MPORT-MAIN)	1	
	5	REX1807	9P WIRE (USB-MAIN)	1	
	6	RGC0053-W	VOLUME LIGHT REFLECTOR	2	
	7	RGK2602A-K	CD LID	1	
	8	RGK2609-S	LEFT BUTTON ORNAMENT	1	
	9	RGK2610-S	RIGHT BUTTON ORNAMENT	1	
	10	RGL0816-Q	USB REC LIGHT PIECE	1	
	11	RGL0817-Q	VOLUME LIGHT RING	2	
⚠	12	RGR0473B-AA	REAR PANEL	1	AKX600P N
⚠	12	RGR0473B-BA	REAR PANEL	1	AKX600P S
⚠	12	RGR0473C-AA	REAR PANEL	1	AKX800P N

Safety	Ref. No.	Part No.	Part Name & Description	Qty	Remarks
⚠	12	RGR0473C-BA	REAR PANEL	1	AKX800P S
	13	RFKGAKX600LK	FRONT PANEL ASS'Y	1	AKX600
	13	RFKGAKX800LK	FRONT PANEL ASS'Y	1	AKX800
	14	RGU2979B-K	UPPER FUNCTION BUTTON	1	
	15	RGU2980-S	LEFT FUNCTION BUTTON	1	
	16	RGU2981-S	RIGHT FUNCTION BUTTON	1	
	17	RGW0457-1S	VOLUME KNOB	2	AKX600
	17	RGW0457-W	VOLUME KNOB	2	AKX800
	18	RMNV0079-1	FL HOLDER	1	
	19	RKAX0042-K	LEG CUSHION	2	
⚠	20	RKM0765-K	TOP CABINET	1	
	21	RKW1088-Q	FL WINDOW	1	
	22	RMA2442-3	CHASSIS SUPPORT	2	
	23	RMB0995	CD LID SPRING	1	
	24	RMGX0033A-K	CD LID CUSHION	1	
	25	RMK0895	BOTTOM CHASSIS	1	
	26	RMK0896	INNER CHASSIS	1	
	27	RMNX0298	PCB SPACER	1	
	28	RMQ2134	MECHA SUPPORT	2	
	30	RHD26043-1	SCREW	4	AKX600
	30	RHD26043-1	SCREW	5	AKX800
	31	RHD26046-L	SCREW	4	
	32	RHD30007-K2J	SCREW	4	
	33	RHD30111-31	SCREW	13	
	34	RHD30119-S	SCREW	17	
	35	RHDX031008	SCREW	2	

Safety	Ref. No.	Part No.	Part Name & Description	Qty	Remarks
	39	L6FALEFH0030	FAN UNIT	1	
	40	L6FAYYYH0297	FAN UNIT	1	
	44	RMF0770-1	HIMELON	1	
	45	RMF0771	HIMELON (20X2.7X0.25)	2	
	46	RMF0772	HIMELON (40X6.5X0.25)	1	
	49	REE1727	15P FFC (MAIN-TUNER)	1	
	50	RHDX30005-J	SCREW	3	
	51	RMA2489	FAN ANGLE	1	
	52	RMG1002-D	MECHA CUSHION	2	
	53	RMQ2275	FRONT MECHA SUP-PORT	1	
	54	RHD30008	SCREW	2	
			TRAVERSE DECK		
⚠	301	RAE1047Z-V	TRAVERSE UNIT	1	(E.S.D)
	312	XTN2+6GFJ	SCREW	2	
			PACKING MATERI-ALS		
	P1	RPG0P51	PACKING CASE	1	AKX600P N
	P1	RPG0Q28	PACKING CASE	1	AKX600P S
	P1	RPG0P54	PACKING CASE	1	AKX800P N
	P1	RPG0P55	PACKING CASE	1	AKX800P S
	P2	RPN2730	POLYFOAM	1	AKX600
	P2	RPN2731	POLYFOAM	1	AKX800
	P3	RPFX0198-1	MIRAMAT SHEET	1	
			ACCESSORIES		
	A1	N2QAYB001022	REMOTE CONTROL	1	
⚠	A2	K2CB2CB00022	AC CORD	1	PN
⚠	A2	K2CQ2YY00119	AC CORD	1	PS
⚠	A3	RQT9970-M	O/I BOOK (Sp)	1	
⚠	A3	RQT9974-B	O/I BOOK (En)	1	
	A4	RSAX0002	FM INDOOR ANTENNA	1	
	A5	N1DYYYY00011	AM LOOP ANTENNA	1	

15.6. Electrical Replacement Parts List

Important Safety Notice

Components identified by ⚠ mark have special characteristics important for safety.
When replacing any of these components, use only manufacturer's specified parts.

RTL (Retention Time Limited)

Note: The marking (RTL) indicates that the Retention Time is Limited for this item.
After the discontinuation of this assembly in production, the item will continue to be available for a specific period of time. The retention period of availability is dependant on the type of assembly, and in accordance with the laws governing part and product retention. After the end of this period, the assembly will no longer be available.

Note:

- When replacing any of these components, be sure to use only manufacturer's specified parts shown in the replacement part list.
- The parenthesized indications on the Remarks column specify the destination & product color (Refer to the cover page for the information).
- Parts without these indications shall be used for all areas.
- This product uses a laser diode. Refer to "Precaution of Laser Diode".
- Capacitor value are in microfarads (uF) unless specified otherwise, P=Pico-farads (pF), F=Farads.
- Resistance values are in ohms, unless specified otherwise, 1K=1000 (OHM).
- All parts mentioned are supplied by PAVCJM unless indicated likewise.
- Parts mentioned [SPG] in the Remarks column are supplied by JAPAN.

E.S.D. standards for Electrostatically Sensitive Devices, refer to "PREVENTION OF ELECTROSTATIC DISCHARGE (ESD) TO ELECTROSTATIC SENSITIVE (ES) DEVICES" section.

Safety	Ref. No.	Part No.	Part Name & Description	Qty	Remarks
			PRINTED CIRCUIT BOARDS		
	PCB1	RFKB5140EA	MAIN P.C.B W/ DATA	1	AKX600P N
	PCB1	RFKB5140FA	MAIN P.C.B W/ DATA	1	AKX600P S
	PCB1	RFKB5140AA	MAIN P.C.B W/ DATA	1	AKX800P N
	PCB1	RFKB5140BA	MAIN P.C.B W/ DATA	1	AKX800P S
	PCB2	REP5140EB	TUNER P.C.B	1	AKX600P N
	PCB2	REP5140FB	TUNER P.C.B	1	AKX600P S
	PCB2	REP5140AB	TUNER P.C.B	1	(RTL) AKX800P N
	PCB2	REP5140BB	TUNER P.C.B	1	(RTL) AKX800P S
	PCB3	REP5158BA	PANEL P.C.B	1	(RTL) AKX600
	PCB3	REP5158AA	PANEL P.C.B	1	(RTL) AKX800
	PCB4	REP5158BB	USB P.C.B	1	(RTL) AKX600
	PCB4	REP5158AB	USB P.C.B	1	(RTL) AKX800
	PCB5	REP5158BC	MUSIC PORT P.C.B	1	(RTL) AKX600
	PCB5	REP5158AC	MUSIC PORT P.C.B	1	(RTL) AKX800
	PCB6	RSNE031B0	BT P.C.B (IC7701)	1	

Safety	Ref. No.	Part No.	Part Name & Description	Qty	Remarks
⚠	PCB7	N0AB2GP00003	SMPS MODULE	1	PN
⚠	PCB7	N0AC2GP00004	SMPS MODULE	1	PS
			INTEGRATED CIR-CUITS		
	IC52	VUEALLPT087	IC W/DATA	1	(E.S.D) JIGS&AD J
	IC1001	C1AB00004188	IC	1	(E.S.D)
	IC1002	C0EBY0000664	IC	1	(E.S.D)
	IC1003	RFKWFKX800LM	IC W/DATA	1	(E.S.D) JIGS&AD J
	IC1004	RFKWEKX800LM	IC W/DATA	1	(E.S.D) JIGS&AD J
	IC2001	RFKB5140EA	IC W/DATA	1	(E.S.D) JIGS&AD J, AKX600P N
	IC2001	RFKB5140FA	IC W/DATA	1	(E.S.D) JIGS&AD J, AKX600P S
	IC2001	RFKB5140AA	IC W/DATA	1	(E.S.D) JIGS&AD J, AKX800P N
	IC2001	RFKB5140BA	IC W/DATA	1	(E.S.D) JIGS&AD J, AKX800P S
	IC2101	C0DBAYY01594	IC	1	(E.S.D)
	IC2102	C0ABBB000342	IC	1	(E.S.D)

Safety	Ref. No.	Part No.	Part Name & Description	Qty	Remarks
	IC2103	C0DBAYY01594	IC	1	(E.S.D)
	IC2104	C0DBGYY03909	IC	1	(E.S.D)
	IC2107	C0DBGYY00911	IC	1	(E.S.D)
	IC2108	C0DBGYY03909	IC	1	(E.S.D)
	IC3001	C1AB00003986	IC	1	(E.S.D)
	IC3101	C1AB00003986	IC	1	(E.S.D)
	IC3201	C1AB00003986	IC	1	(E.S.D)
	IC3301	C1AB00003986	IC	1	(E.S.D) AKX800
	IC4001	VUEALLPT090	IC W/DATA	1	(E.S.D) JIGS&ADJ
	IC4506	C1AB00004031	IC	1	(E.S.D) AKX800
	IC5001	C0GBY0000213	IC	1	(E.S.D)
	IC6000	C0HBB0000057	IC	1	(E.S.D)
	IC6100	C0JBAR000367	IC	1	(E.S.D)
	IC8006	C0JBAZ002990	IC	1	(E.S.D)
	IC9001	C0JBAS000401	IC	1	(E.S.D)
	IC9002	C0DBZYY00716	IC	1	(E.S.D)
	IC9003	C0DBZYY00716	IC	1	(E.S.D)
			TRANSISTORS		
	Q1001	B1ABCE000015	TRANSISTOR	1	(E.S.D)
	Q1002	B1GBCFJJ0041	TRANSISTOR	1	(E.S.D)
	Q2100	B1AAJC000019	TRANSISTOR	1	(E.S.D)
	Q2101	DSA200100L	TRANSISTOR	1	(E.S.D)
	Q2103	B1AAJC000019	TRANSISTOR	1	(E.S.D)
	Q2104	B1ABCF000231	TRANSISTOR	1	(E.S.D)
	Q2106	B1ABCF000231	TRANSISTOR	1	(E.S.D)
	Q2108	B1ABCF000231	TRANSISTOR	1	(E.S.D)
	Q2110	B1ABCF000231	TRANSISTOR	1	(E.S.D)
	Q2111	B1ABCF000231	TRANSISTOR	1	(E.S.D)
	Q2112	B1ABCF000231	TRANSISTOR	1	(E.S.D)
	Q2113	B1AAJC000019	TRANSISTOR	1	(E.S.D)
	Q2116	B1GBCFJJ0041	TRANSISTOR	1	(E.S.D)
	Q2117	B1ADGF000010	TRANSISTOR	1	(E.S.D)
	Q2119	B1GBCFJJ0041	TRANSISTOR	1	(E.S.D)
	Q3500	B1ABCF000231	TRANSISTOR	1	(E.S.D)
	Q3501	B1ABCF000231	TRANSISTOR	1	(E.S.D)
	Q3502	DSA200100L	TRANSISTOR	1	(E.S.D)
	Q3503	B1ABCF000231	TRANSISTOR	1	(E.S.D)
	Q5001	B1ADCF000001	TRANSISTOR	1	(E.S.D)
	Q6000	B1BABG000007	TRANSISTOR	1	(E.S.D) AKX800
	Q6001	B1ABMG000008	TRANSISTOR	1	(E.S.D)
	Q9003	DSA200100L	TRANSISTOR	1	(E.S.D)
	Q9005	B1ADCE000012	TRANSISTOR	1	(E.S.D)
	QR1201	B1GBCFJJ0040	TRANSISTOR	1	(E.S.D)
	QR2101	B1GBCFJJ0041	TRANSISTOR	1	(E.S.D)
	QR2102	B1GBCFJJ0040	TRANSISTOR	1	(E.S.D)
	QR2502	B1GBCFGN0016	TRANSISTOR	1	(E.S.D) AKX800
	QR2503	B1GBCFGN0016	TRANSISTOR	1	(E.S.D) AKX800
	QR2505	B1GBCFGN0016	TRANSISTOR	1	(E.S.D) AKX800
	QR6000	B1GBCFGN0018	TRANSISTOR	1	(E.S.D) AKX800
	QR6001	B1GBCFJJ0041	TRANSISTOR	1	(E.S.D)
	QR6003	B1GBCFGN0018	TRANSISTOR	1	(E.S.D)
	QR6004	B1GBCFGN0018	TRANSISTOR	1	(E.S.D)
	QR6005	B1GBCFGN0018	TRANSISTOR	1	(E.S.D)
	QR6100	B1GBCFJJ0040	TRANSISTOR	1	(E.S.D)
	QR6101	B1GBCFJJ0040	TRANSISTOR	1	(E.S.D)
	QR9001	B1GBCFGN0016	TRANSISTOR	1	(E.S.D)
	QR9003	B1GBCFGN0016	TRANSISTOR	1	(E.S.D)
			DIODES		
	D1001	DZ2J130M0L	DIODE	1	(E.S.D)
	D2100	B0ADDJ000032	DIODE	1	(E.S.D)
	D2101	DA2J10100L	DIODE	1	(E.S.D)
	D2103	DA2J10100L	DIODE	1	(E.S.D)

Safety	Ref. No.	Part No.	Part Name & Description	Qty	Remarks
	D2104	DZ2J130M0L	DIODE	1	(E.S.D)
	D2105	B0ADDJ000032	DIODE	1	(E.S.D)
	D2106	B0JCPG000032	DIODE	1	(E.S.D)
	D2107	B0JCPG000032	DIODE	1	(E.S.D)
	D2109	B0ADDJ000032	DIODE	1	(E.S.D)
	D2111	DZ2J130M0L	DIODE	1	(E.S.D)
	D3000	DA2J10100L	DIODE	1	(E.S.D)
	D3001	DA2J10100L	DIODE	1	(E.S.D)
	D5001	DB2J31400L	DIODE	1	(E.S.D)
	D6005	B0EAMM000057	DIODE	1	(E.S.D)
	D6006	B0BC033A0282	DIODE	1	(E.S.D)
	D6007	B0EAMM000057	DIODE	1	(E.S.D)
	D6009	DZ2J24000L	DIODE	1	(E.S.D)
	D6012	B0BC2R4A0006	DIODE	1	(E.S.D)
	D6018	B0JAME000114	DIODE	1	(E.S.D)
	D6021	B0EAMM000057	DIODE	1	(E.S.D) AKX800
	D6022	B0EAMM000057	DIODE	1	(E.S.D) AKX600
	D6101	B3AEA0000172	DIODE	1	(E.S.D)
	D6102	B3AAA0001129	DIODE	1	(E.S.D)
	D6103	B3ABA0000905	DIODE	1	(E.S.D)
	D6104	B3ABA0000905	DIODE	1	(E.S.D)
	D6105	B3AAA0001129	DIODE	1	(E.S.D)
	D6106	B3AEA0000172	DIODE	1	(E.S.D)
	D6201	DA2J10100L	DIODE	1	(E.S.D)
	D6202	DA2J10100L	DIODE	1	(E.S.D)
	D6203	DA2J10100L	DIODE	1	(E.S.D)
	D6204	DA2J10100L	DIODE	1	(E.S.D)
	D6205	DA2J10100L	DIODE	1	(E.S.D)
	D6206	DA2J10100L	DIODE	1	(E.S.D)
	D6400	B3AAA0000487	DIODE	1	(E.S.D)
	D6401	B3AAA0000487	DIODE	1	(E.S.D)
	D9001	B0ECKM000008	DIODE	1	(E.S.D)
			VARIABLE RESIS-TORS		
	VR9000	EVEKE2F3524B	VOLUME JOG	1	
	VR9001	EVEKE2F3524B	MULTI CONTROL	1	
			ESD SUPRESSOR		
	VA51	EZAEG2A50AX	ESD SUPRESSOR	1	
			SWITCHES		
	S6200	EVQ21405RJ	SW POWER	1	
	S6201	EVQ21405RJ	SW OPEN/CLOSE	1	
	S6202	EVQ21405RJ	SW STOP/TUNE MODE	1	
	S6211	EVQ21405RJ	SW D.BASS	1	
	S6212	EVQ21405RJ	SW ALBUM TRACK - ILLUMINATION	1	
	S6213	EVQ21405RJ	SW FWD	1	
	S6214	EVQ21405RJ	SW CD/RADIO/AUX	1	
	S6215	EVQ21405RJ	SW PLAY/PAUSE	1	
	S6216	EVQ21405RJ	SW DJ JUKEBOX/ SAMPLER	1	
	S6221	EVQ21405RJ	SW LATIN/EQ	1	
	S6222	EVQ21405RJ	SW RWD	1	
	S6223	EVQ21405RJ	SW BT/-PAIRING	1	
	S6224	EVQ21405RJ	SW MEM/USB	1	
	S6225	EVQ21405RJ	SW USB REC	1	
	S6226	EVQ21405RJ	SW MEMORY REC	1	
	S7201	K0L1BA000158	SW RESET	1	
			CONNECTORS		
	CN2101	K1KA02AA0186	2P CONNECTOR	1	
	CN2102	K1KA02AA0186	2P CONNECTOR	1	
	CN2103	K1YZ13000002	13P CONNECTOR	1	
	CN2502	K1KA04BA0061	4P CONNECTOR	1	AKX800
	CN2506	K1MN22A00012	22P CONNECTOR	1	

Safety	Ref. No.	Part No.	Part Name & Description	Qty	Remarks
	CN2507	K1KA04AA0193	4P CONNECTOR	1	
	CN2511	K1KA09AA0193	9P CONNECTOR	1	
	CN51	K1MN15A00007	15P CONNECTOR	1	
	CN6100	K1MN15A00007	15P CONNECTOR	1	
	CN6100	K1MN22B00014	22P CONNECTOR	1	
	CN6300	K1ZZ00000832	4P CONNECTOR	1	
	CN6402	K1YA09000001	9P CONNECTOR	1	
	CN7001	K1MY05BA0539	5P CONNECTOR	1	
	CN7002	K1MN10B00016	10P CONNECTOR	1	
	P1002	K1MN08A00048	8P CONNECTOR	1	
	P1003	K1KA06AA0083	6P CONNECTOR	1	
	P5002	K1MY24A00001	24P CONNECTOR	1	
	P5102	K1MN10AA0076	10P CONNECTOR	1	
			COILS AND INDUC-TORS		
	L51	G1CR18JA0020	INDUCTOR	1	
	L52	G2A380Y00002	COIL	1	
	L54	G1C1R0MA0204	INDUCTOR	1	
	L2101	G1C470MA0445	INDUCTOR	1	
	L2102	G1C330MA0291	INDUCTOR	1	
	L3000	G0C100M00013	INDUCTOR	1	
	L3001	G0C100M00013	INDUCTOR	1	
	L3003	G1C4R7MA0172	INDUCTOR	1	
	L3100	G0C100M00013	INDUCTOR	1	
	L3101	G0C100M00013	INDUCTOR	1	
	L3200	G0C100M00013	INDUCTOR	1	
	L3201	G0C100M00013	INDUCTOR	1	
	L3300	G0C100M00013	INDUCTOR	1	AKX800
	L3301	G0C100M00013	INDUCTOR	1	AKX800
	L6301	J0JBC0000019	INDUCTOR	1	
	L6302	J0JBC0000019	INDUCTOR	1	
	LB51	J0JBC0000032	INDUCTOR	1	
	LB52	J0JYC0000118	INDUCTOR	1	
	LB1001	J0JBC0000010	INDUCTOR	1	
	LB1002	J0JBC0000010	INDUCTOR	1	
	LB1003	J0JBC0000010	INDUCTOR	1	
	LB1004	J0JBC0000010	INDUCTOR	1	
	LB1005	D0GB100JA065	10 1/10W	1	
	LB1006	J0JBC0000010	INDUCTOR	1	
	LB1007	J0JBC0000010	INDUCTOR	1	
	LB1008	J0JCC0000286	INDUCTOR	1	
	LB1009	J0JCC0000286	INDUCTOR	1	
	LB1010	J0JCC0000286	INDUCTOR	1	
	LB1011	J0JCC0000286	INDUCTOR	1	
	LB1012	J0JCC0000278	INDUCTOR	1	
	LB1013	J0JCC0000278	INDUCTOR	1	
	LB1014	J0JCC0000286	INDUCTOR	1	
	LB1015	J0JCC0000286	INDUCTOR	1	
	LB1016	J0JBC0000010	INDUCTOR	1	
	LB1017	J0JBC0000010	INDUCTOR	1	
	LB1018	J0JBC0000010	INDUCTOR	1	
	LB1019	J0JBC0000088	INDUCTOR	1	
	LB1020	J0JBC0000088	INDUCTOR	1	
	LB1025	J0JCC0000286	INDUCTOR	1	
	LB1027	J0JCC0000286	INDUCTOR	1	
	LB1030	J0JBC0000010	INDUCTOR	1	
	LB1031	J0JBC0000010	INDUCTOR	1	
	LB1032	J0JBC0000010	INDUCTOR	1	
	LB1033	J0JBC0000010	INDUCTOR	1	
	LB1035	J0JCC0000278	INDUCTOR	1	
	LB1036	J0JCC0000286	INDUCTOR	1	
	LB1037	J0JCC0000286	INDUCTOR	1	
	LB1038	J0JCC0000286	INDUCTOR	1	
	LB1039	J0JCC0000286	INDUCTOR	1	
	LB1201	J0JBC0000010	INDUCTOR	1	
	LB2001	J0JBC0000010	INDUCTOR	1	
	LB2100	J0JKB0000020	INDUCTOR	1	
	LB2101	J0JHC0000046	INDUCTOR	1	
	LB2102	J0JHC0000046	INDUCTOR	1	
	LB2103	J0JHC0000046	INDUCTOR	1	
	LB2500	J0JBC0000010	INDUCTOR	1	

Safety	Ref. No.	Part No.	Part Name & Description	Qty	Remarks
	LB2501	J0JBC0000010	INDUCTOR	1	
	LB2502	J0JBC0000010	INDUCTOR	1	
	LB2503	J0JBC0000010	INDUCTOR	1	
	LB2513	J0JBC0000010	INDUCTOR	1	
	LB2514	J0JBC0000010	INDUCTOR	1	
	LB2521	J0JBC0000010	INDUCTOR	1	
	LB2522	J0JBC0000010	INDUCTOR	1	
	LB2523	J0JBC0000010	INDUCTOR	1	
	LB2525	J0JYC0000452	INDUCTOR	1	
	LB2526	J0JYC0000452	INDUCTOR	1	
	LB2531	J0JYC0000656	INDUCTOR	1	AKX800
	LB2532	J0JYC0000656	INDUCTOR	1	AKX800
	LB2533	J0JYC0000656	INDUCTOR	1	AKX800
	LB2534	J0JYC0000656	INDUCTOR	1	AKX800
	LB4001	J0JBC0000010	INDUCTOR	1	
	LB4002	J0JBC0000010	INDUCTOR	1	
	LB4530	J0JCC0000101	INDUCTOR	1	AKX800
	LB5001	J0JBC0000134	INDUCTOR	1	
	LB5003	J0JYC0000322	INDUCTOR	1	
	LB5004	J0JYC0000322	INDUCTOR	1	
	LB5005	J0JBC0000134	INDUCTOR	1	
	LB5006	J0JBC0000010	INDUCTOR	1	
	LB5007	J0JBC0000010	INDUCTOR	1	
	LB5008	J0JBC0000010	INDUCTOR	1	
	LB5009	J0JBC0000010	INDUCTOR	1	
	LB5010	J0JBC0000010	INDUCTOR	1	
	LB5011	J0JBC0000010	INDUCTOR	1	
	LB5015	J0JBC0000010	INDUCTOR	1	
	LB5016	J0JBC0000010	INDUCTOR	1	
	LB5017	J0JBC0000010	INDUCTOR	1	
	LB5018	J0JBC0000010	INDUCTOR	1	
	LB5102	G1C100KA0101	INDUCTOR	1	
	LB6014	J0JBC0000010	INDUCTOR	1	
	LB6015	J0JBC0000010	INDUCTOR	1	
	LB6016	J0JBC0000010	INDUCTOR	1	
	LB6017	J0JBC0000010	INDUCTOR	1	
	LB6018	J0JYC0000656	INDUCTOR	1	
	LB6100	J0JBC0000134	INDUCTOR	1	
	LB6119	J0JBC0000010	INDUCTOR	1	
	LB6120	J0JBC0000010	INDUCTOR	1	
	LB6400	J0JHC0000118	INDUCTOR	1	
	LB6401	J0JHC0000118	INDUCTOR	1	
			TRANSFORMER		
	T6000	G4DYA0000214	SWITCHING TRANS-FORMER	1	
			FILTERS		
	T9001	J0ZZB0000182	FILTER	1	
	T9002	J0ZZB0000182	FILTER	1	
			TERMINALS		
	ZJ1001	K9ZZ00001279	EARTH PLATE	1	
	ZJ1002	K9ZZ00001279	EARTH PLATE	1	
	ZJ2100	K9ZZ00001279	EARTH PLATE	1	
			OSCILLATORS		
	X1001	H0J169500045	OSCILLATOR	1	
	X1002	H0A327200191	OSCILLATOR	1	
	X4001	H0J245500110	OSCILLATOR	1	
			FL DISPLAY		
	FL6000	A2BB00000184	FL DISPLAY	1	
			JACKS		
	JK51	K4ZZ02000103	JK FM ANTENNA	1	
	JK52	K4AC02B00042	JK AM ANTENNA	1	

Safety	Ref. No.	Part No.	Part Name & Description	Qty	Remarks
	JK3501	K4AZ10A00004	JK SPEAKERS	1	AKX800
	JK3502	K4AZ08A00007	JK SPEAKERS	1	AKX600
	JK6002	K2HA2YYA0009	JK AUX IN 1	1	
	JK6301	K2HC103A0031	JK AUX IN 2	1	
	JK6400	K1FY104A0034	JK USB A	1	
	JK6401	K1FY104A0034	JK USB B	1	
			CHIP JUMPERS		
	K5001	D0GBR00J0004	0 1/10W	1	
	K5002	D0GBR00J0004	0 1/10W	1	
	K5003	D0GBR00J0004	0 1/10W	1	
	K5004	D0GBR00J0004	0 1/10W	1	
	K5005	D0GBR00J0004	0 1/10W	1	
	K5006	D0GBR00J0004	0 1/10W	1	
	K5007	D0GBR00J0004	0 1/10W	1	
	K5008	D0GBR00J0004	0 1/10W	1	
	K5009	D0GBR00J0004	0 1/10W	1	
	K5010	D0GBR00J0004	0 1/10W	1	
	K5011	D0GBR00J0004	0 1/10W	1	
	L53	D0GBR00J0004	0 1/10W	1	
	L6000	D0GBR00J0004	0 1/10W	1	
	L6300	D0GBR00J0004	0 1/10W	1	
	LB6303	D0GBR00J0004	0 1/10W	1	
	LB9001	D0GBR00J0004	0 1/10W	1	
	LB9002	D0GBR00J0004	0 1/10W	1	
	LB9003	D0GBR00J0004	0 1/10W	1	
	W100	ERJ8GEY0R00V	0 1/4W	1	
	W101	ERJ8GEY0R00V	0 1/4W	1	
	W104	ERJ8GEY0R00V	0 1/4W	1	
	W105	ERJ8GEY0R00V	0 1/4W	1	
	W106	ERJ8GEY0R00V	0 1/4W	1	
	W107	ERJ8GEY0R00V	0 1/4W	1	
	W108	ERJ8GEY0R00V	0 1/4W	1	
	W109	ERJ8GEY0R00V	0 1/4W	1	
	W110	ERJ8GEY0R00V	0 1/4W	1	
	W111	ERJ6GEY0R00V	0 1/8W	1	
	W112	ERJ8GEY0R00V	0 1/4W	1	
	W113	ERJ8GEY0R00V	0 1/4W	1	
	W114	ERJ8GEY0R00V	0 1/4W	1	
	W116	ERJ3GEY0R00V	0 1/10W	1	
	W117	ERJ6GEY0R00V	0 1/8W	1	
	W118	ERJ8GEY0R00V	0 1/4W	1	
	W119	ERJ8GEY0R00V	0 1/4W	1	
	W120	ERJ8GEY0R00V	0 1/4W	1	
	W121	ERJ8GEY0R00V	0 1/4W	1	
	W122	ERJ8GEY0R00V	0 1/4W	1	
	W124	ERJ8GEY0R00V	0 1/4W	1	
	W126	ERJ8GEY0R00V	0 1/4W	1	
	W127	ERJ8GEY0R00V	0 1/4W	1	
	W128	ERJ3GEY0R00V	0 1/10W	1	
	W129	ERJ8GEY0R00V	0 1/4W	1	
	W130	ERJ3GEY0R00V	0 1/10W	1	
	W131	ERJ8GEY0R00V	0 1/4W	1	
	W132	ERJ8GEY0R00V	0 1/4W	1	
	W135	ERJ8GEY0R00V	0 1/4W	1	
	W136	ERJ3GEY0R00V	0 1/10W	1	
	W137	ERJ8GEY0R00V	0 1/4W	1	
	W138	ERJ8GEY0R00V	0 1/4W	1	
	W139	ERJ8GEY0R00V	0 1/4W	1	
	W140	ERJ8GEY0R00V	0 1/4W	1	
	W141	D0GFR00J0005	0 1/10W	1	
	W142	ERJ8GEY0R00V	0 1/4W	1	
	W143	ERJ8GEY0R00V	0 1/4W	1	
	W144	ERJ8GEY0R00V	0 1/4W	1	
	W145	ERJ8GEY0R00V	0 1/4W	1	
	W146	ERJ8GEY0R00V	0 1/4W	1	
	W147	ERJ8GEY0R00V	0 1/4W	1	
	W148	ERJ8GEY0R00V	0 1/4W	1	
	W150	ERJ8GEY0R00V	0 1/4W	1	
	W151	ERJ8GEY0R00V	0 1/4W	1	
	W152	ERJ8GEY0R00V	0 1/4W	1	
	W154	ERJ8GEY0R00V	0 1/4W	1	

Safety	Ref. No.	Part No.	Part Name & Description	Qty	Remarks
	W155	ERJ8GEY0R00V	0 1/4W	1	
	W156	ERJ6GEY0R00V	0 1/8W	1	
	W157	ERJ3GEY0R00V	0 1/10W	1	
	W158	ERJ3GEY0R00V	0 1/10W	1	
	W159	ERJ3GEY0R00V	0 1/10W	1	
	W160	ERJ3GEY0R00V	0 1/10W	1	
	W161	ERJ3GEY0R00V	0 1/10W	1	
	W162	ERJ8GEY0R00V	0 1/4W	1	
	W163	ERJ8GEY0R00V	0 1/4W	1	
	W164	ERJ8GEY0R00V	0 1/4W	1	
	W165	ERJ8GEY0R00V	0 1/4W	1	
	W166	ERJ8GEY0R00V	0 1/4W	1	
	W167	ERJ8GEY0R00V	0 1/4W	1	
	W168	ERJ8GEY0R00V	0 1/4W	1	
	W169	ERJ8GEY0R00V	0 1/4W	1	
	W170	ERJ8GEY0R00V	0 1/4W	1	
	W171	ERJ8GEY0R00V	0 1/4W	1	
	W172	ERJ3GEY0R00V	0 1/10W	1	
	W173	ERJ3GEY0R00V	0 1/10W	1	
	W174	ERJ3GEY0R00V	0 1/10W	1	
	W175	ERJ8GEY0R00V	0 1/4W	1	
	W176	ERJ8GEY0R00V	0 1/4W	1	
	W177	ERJ8GEY0R00V	0 1/4W	1	
	W178	ERJ8GEY0R00V	0 1/4W	1	
	W179	ERJ8GEY0R00V	0 1/4W	1	
	W180	ERJ8GEY0R00V	0 1/4W	1	
	W181	ERJ8GEY0R00V	0 1/4W	1	
	W182	ERJ6GEY0R00V	0 1/8W	1	
	W183	ERJ8GEY0R00V	0 1/4W	1	
	W184	ERJ8GEY0R00V	0 1/4W	1	
	W185	ERJ8GEY0R00V	0 1/4W	1	
	W186	ERJ8GEY0R00V	0 1/4W	1	
	W187	ERJ6GEY0R00V	0 1/8W	1	
	W188	ERJ8GEY0R00V	0 1/4W	1	
	W189	ERJ8GEY0R00V	0 1/4W	1	
	W201	ERJ6GEY0R00V	0 1/8W	1	
			REMOTE SENSOR		
	IR6500	B3RAD0000049	REMOTE SENSOR	1	
			RESISTORS		
	R50	D0GDR00J0004	0 1/8W	1	
	R51	D0GB222JA065	2.2K 1/10W	1	
	R52	D0GB561JA065	560 1/10W	1	
	R53	D0GA472JA023	4.7K 1/16W	1	
	R54	D0GA472JA023	4.7K 1/16W	1	
	R55	D0GAR00J0005	0 1/16W	1	
	R56	D0GBR00J0004	0 1/10W	1	
	R57	D0GA102JA023	1K 1/16W	1	
	R59	D0GB222JA065	2.2K 1/10W	1	
	R60	D0GBR00J0004	0 1/10W	1	
	R73	D0GBR00J0004	0 1/10W	1	
	R74	D0GBR00J0004	0 1/10W	1	
	R75	D0GBR00J0004	0 1/10W	1	
	R76	D0GBR00J0004	0 1/10W	1	
	R77	D0GBR00J0004	0 1/10W	1	
	R78	D0GBR00J0004	0 1/10W	1	
	R79	D0GBR00J0004	0 1/10W	1	
	R80	D0GBR00J0004	0 1/10W	1	
	R1001	D0GB471JA065	470 1/10W	1	
	R1002	J0JBC0000088	INDUCTOR	1	
	R1003	J0JBC0000088	INDUCTOR	1	
	R1004	J0JCC0000287	INDUCTOR	1	
	R1005	J0JCC0000287	INDUCTOR	1	
	R1006	J0JCC0000287	INDUCTOR	1	
	R1007	J0JCC0000287	INDUCTOR	1	
	R1008	J0JCC0000287	INDUCTOR	1	
	R1009	J0JCC0000287	INDUCTOR	1	
	R1011	D0GB221JA065	220 1/10W	1	
	R1012	J0JCC0000309	INDUCTOR	1	
	R1013	D0GB222JA065	2.2K 1/10W	1	

Safety	Ref. No.	Part No.	Part Name & Description	Qty	Remarks
	R1014	D0GB221JA065	220 1/10W	1	
	R1015	D0GB102JA065	1K 1/10W	1	
	R1016	D0GBR00J0004	0 1/10W	1	
	R1017	D0GBR00J0004	0 1/10W	1	
	R1018	D0GB101JA065	100 1/10W	1	
	R1019	J0JBC0000010	INDUCTOR	1	
	R1020	J0JCC0000278	INDUCTOR	1	
	R1021	J0JBC0000010	INDUCTOR	1	
	R1022	D0GB222JA065	2.2K 1/10W	1	
	R1023	J0JCC0000309	INDUCTOR	1	
	R1024	D0GB681JA065	680 1/10W	1	
	R1025	D0GB105JA065	1M 1/10W	1	
	R1026	D0GB224JA065	220K 1/10W	1	
	R1027	D0GB106JA065	10M 1/10W	1	
	R1028	J0JBC0000010	INDUCTOR	1	
	R1029	D0GB103JA065	10K 1/10W	1	
	R1031	D0GB103JA065	10K 1/10W	1	
	R1032	D0GB103JA065	10K 1/10W	1	
	R1035	D0GBR00J0004	0 1/10W	1	
	R1036	D0GBR00J0004	0 1/10W	1	
	R1038	D0GA103JA023	10K 1/16W	1	
	R1041	D0GB103JA065	10K 1/10W	1	
	R1042	D0GBR00J0004	0 1/10W	1	
	R1043	D0GB103JA065	10K 1/10W	1	
	R1044	D0GB103JA065	10K 1/10W	1	
	R1045	J0JBC0000088	INDUCTOR	1	
	R1046	J0JBC0000088	INDUCTOR	1	
	R1047	J0JBC0000088	INDUCTOR	1	
	R1048	D0GB101JA065	100 1/10W	1	
	R1049	D0GB101JA065	100 1/10W	1	
	R1054	D0GB222JA065	2.2K 1/10W	1	
	R1055	J0JCC0000278	INDUCTOR	1	
	R1056	J0JCC0000278	INDUCTOR	1	
	R1057	J0JCC0000278	INDUCTOR	1	
	R1058	J0JCC0000278	INDUCTOR	1	
	R1059	J0JCC0000278	INDUCTOR	1	
	R1060	J0JCC0000278	INDUCTOR	1	
	R1065	D0GBR00J0004	CHIP JUMPER	1	
	R1066	D0GBR00J0004	CHIP JUMPER	1	
	R1067	D1BB6802A074	68K 1/10W	1	
	R1068	D1BB1502A074	15K 1/10W	1	
	R1071	D0GB103JA065	10K 1/10W	1	AKX800
	R1072	D0GB222JA065	2.2K 1/10W	1	AKX600
	R1074	D0GB222JA065	2.2K 1/10W	1	
	R1076	D0GB222JA065	2.2K 1/10W	1	
	R1077	D0GB103JA065	10K 1/10W	1	PS
	R1078	D0GB222JA065	2.2K 1/10W	1	PN
	R1095	D0GB122JA065	1.2K 1/10W	1	AKX800
	R1096	D0GDR00J0004	0 1/8W	1	
	R1097	D0GB334JA065	330K 1/10W	1	
	R1100	J0JCC0000278	INDUCTOR	1	
	R1101	J0JBC0000010	INDUCTOR	1	
	R1103	D0GB222JA065	2.2K 1/10W	1	
	R1104	D0GB222JA065	2.2K 1/10W	1	
	R1105	D0GB103JA065	10K 1/10W	1	
	R1106	D0GB103JA065	10K 1/10W	1	
	R1107	D0GB122JA065	1.2K 1/10W	1	
	R1108	D0GB122JA065	1.2K 1/10W	1	
	R1114	D0GB103JA065	10K 1/10W	1	
	R1115	D0GB102JA065	1K 1/10W	1	
	R1116	D0GB103JA065	10K 1/10W	1	
	R1117	D0GB103JA065	10K 1/10W	1	
	R1118	D0GBR00J0004	0 1/10W	1	AKX800
	R1119	D0GB123JA065	12K 1/10W	1	AKX800
	R1120	D0GB101JA065	100 1/10W	1	
	R1121	D0GB101JA065	100 1/10W	1	
	R1123	D0GBR00J0004	0 1/10W	1	
	R1124	D0GB474JA065	470K 1/10W	1	
	R1125	D0GB474JA065	470K 1/10W	1	
	R1127	J0JCC0000286	INDUCTOR	1	
	R1128	J0JCC0000286	INDUCTOR	1	
	R1132	J0JCC0000286	INDUCTOR	1	
	R1133	J0JCC0000286	INDUCTOR	1	

Safety	Ref. No.	Part No.	Part Name & Description	Qty	Remarks
	R1202	D0GA101JA023	100 1/16W	1	
	R1203	D0GA101JA023	100 1/16W	1	
	R1204	D0GA101JA023	100 1/16W	1	
	R1205	D0GA101JA023	100 1/16W	1	
	R1206	D0GA101JA023	100 1/16W	1	
	R1207	D0GA101JA023	100 1/16W	1	
	R1208	D0GA101JA023	100 1/16W	1	
	R1209	D0GA101JA023	100 1/16W	1	
	R1210	D0GA101JA023	100 1/16W	1	
	R1214	D0GA101JA023	100 1/16W	1	
	R1215	D0GA101JA023	100 1/16W	1	
	R1216	D0GA101JA023	100 1/16W	1	
	R1217	D0GA101JA023	100 1/16W	1	
	R1219	D0GA101JA023	100 1/16W	1	
	R1220	D0GA101JA023	100 1/16W	1	
	R1221	D0GA101JA023	100 1/16W	1	
	R1222	D0GA101JA023	100 1/16W	1	
	R1223	D0GA101JA023	100 1/16W	1	
	R1224	D0GA101JA023	100 1/16W	1	
	R1225	D0GA101JA023	100 1/16W	1	
	R1226	D0GB392JA065	3.9K 1/10W	1	
	R1227	D0GBR00J0004	0 1/10W	1	
	R1228	D0GB683JA065	68K 1/10W	1	
	R1229	D0GB332JA065	3.3K 1/10W	1	
	R1240	D0GBR00J0004	0 1/10W	1	
	R2001	D0GB473JA065	47K 1/10W	1	
	R2002	D0GB473JA065	47K 1/10W	1	
	R2003	D0GB473JA065	47K 1/10W	1	
	R2004	D0GB473JA065	47K 1/10W	1	
	R2005	D0GB473JA065	47K 1/10W	1	
	R2006	D0GB473JA065	47K 1/10W	1	
	R2007	D0GB473JA065	47K 1/10W	1	
	R2100	D0GBR00J0004	0 1/10W	1	
	R2101	D0GB681JA065	680 1/10W	1	
	R2102	D0GB473JA065	47K 1/10W	1	
	R2103	D0GB123JA065	12K 1/10W	1	
	R2104	D0GB2R2JA065	2.2 1/10W	1	
	R2105	D0GB2R2JA065	2.2 1/10W	1	
	R2106	D0GB2R2JA065	2.2 1/10W	1	
	R2109	D0GB271JA065	270 1/10W	1	
	R2112	D0GBR00J0004	0 1/10W	1	AKX600
	R2113	D0GDR00J0004	0 1/8W	1	
	R2117	D0GB681JA065	680 1/10W	1	
	R2118	D0GB473JA065	47K 1/10W	1	
	R2119	D0GB123JA065	12K 1/10W	1	
	R2121	D0GBR00J0004	0 1/10W	1	PN
	R2123	D0GBR00J0004	0 1/10W	1	PS
	R2125	D0GB274JA065	270K 1/10W	1	
	R2126	D0GB823JA065	82K 1/10W	1	
	R2129	D0GB682JA065	6.8K 1/10W	1	
	R2130	D0GB221JA065	220 1/10W	1	
	R2135	F1H1H104B047	0.1uF 50V	1	
	R2137	D0GB101JA065	100 1/10W	1	
	R2141	D0GB474JA065	470K 1/10W	1	
	R2143	D0AF270JA039	27 1/2W	1	
	R2146	D0GBR00J0004	0 1/10W	1	
	R2147	D0GBR00J0004	0 1/10W	1	
	R2148	D0GB682JA065	6.8K 1/10W	1	
	R2149	D0GB274JA065	270K 1/10W	1	
	R2150	D0GB823JA065	82K 1/10W	1	
	R2151	D0GB221JA065	220 1/10W	1	
	R2152	F1H1H104B047	0.1uF 50V	1	
	R2153	D0GB474JA065	470K 1/10W	1	
	R2154	D0GB101JA065	100 1/10W	1	
	R2155	D0AF270JA039	27 1/2W	1	
	R2156	D0GB821JA065	820 1/10W	1	
	R2157	D0GB101JA065	100 1/10W	1	
	R2158	D0GBR00J0004	0 1/10W	1	AKX800
	R2164	D1BB8202A074	82K 1/10W	1	
	R2165	D1BB1003A074	100K 1/10W	1	
	R2166	D1BB1002A074	10K 1/10W	1	
	R2167	D0GB153JA065	15K 1/10W	1	
	R2168	D1BB3002A074	30K 1/10W	1	

Safety	Ref. No.	Part No.	Part Name & Description		Qty	Remarks
	R2174	D0GDR00J0004	0	1/8W	1	
	R2175	D1BB1002A074	10K	1/10W	1	
	R2176	D1BB3002A074	30K	1/10W	1	
	R2177	D1BB3002A074	30K	1/10W	1	
	R2178	D0GB274JA065	270K	1/10W	1	
	R2179	D0GB683JA065	68K	1/10W	1	
	R2180	D1BB2702A074	27K	1/10W	1	
	R2181	D0GBR00J0004	0	1/10W	1	
	R2187	D0GDR00J0004	0	1/8W	1	
	R2191	D0GBR00J0004	0	1/10W	1	
	R2196	D0GB102JA065	1K	1/10W	1	
	R2197	D0GB185JA065	1.8M	1/10W	1	
	R2198	D0GBR00J0004	0	1/10W	1	
	R2199	D0GBR00J0004	0	1/10W	1	
	R2200	D0GB472JA065	4.7K	1/10W	1	
	R2201	D0GB472JA065	4.7K	1/10W	1	
	R2202	D0GB103JA065	10K	1/10W	1	
	R2203	D0GBR00J0004	0	1/10W	1	
	R2204	D0GBR00J0004	0	1/10W	1	
	R2207	D0GBR00J0004	0	1/10W	1	
	R2211	D0GBR00J0004	0	1/10W	1	
	R2215	D0GBR00J0004	0	1/10W	1	
	R2216	D0GDR00J0004	0	1/8W	1	
	R2219	D0GBR00J0004	0	1/10W	1	
	R2220	D0GBR00J0004	0	1/10W	1	
	R2221	D0GBR00J0004	0	1/10W	1	
	R2225	D0GBR00J0004	0	1/10W	1	
	R2232	D0GBR00J0004	0	1/10W	1	
	R2233	D0GBR00J0004	0	1/10W	1	
	R2234	D0GBR00J0004	0	1/10W	1	
	R2235	D0GB222JA065	2.2K	1/10W	1	
	R2237	D0GB222JA065	2.2K	1/10W	1	
	R2244	D0GDR00J0004	0	1/8W	1	
	R2245	D0GB102JA065	1K	1/10W	1	
	R2246	D0GDR00J0004	0	1/8W	1	
	R2248	D0GB4R7JA065	4.7	1/10W	1	
	R2507	D0GB472JA065	4.7K	1/10W	1	
	R2508	D0GBR00J0004	0	1/10W	1	
	R2509	D0GBR00J0004	0	1/10W	1	
	R2520	D0GBR00J0004	0	1/10W	1	AKX800
	R2544	D0GBR00J0004	0	1/10W	1	AKX800
	R2546	D0GBR00J0004	0	1/10W	1	AKX800
	R2558	D0GBR00J0004	0	1/10W	1	
	R2559	D0GBR00J0004	0	1/10W	1	
	R2562	D0GBR00J0004	0	1/10W	1	
	R2569	J0JBC0000010	INDUCTOR		1	
	R2578	D0GBR00J0004	0	1/10W	1	AKX800
	R2579	D0GF1R0JA048	1.0	1/4W	1	
	R3000	D0GB100JA065	10	1/10W	1	
	R3001	D0GB100JA065	10	1/10W	1	
	R3002	D0GB223JA065	22K	1/10W	1	
	R3003	D0GB101JA065	100	1/10W	1	
	R3004	D0GBR00J0004	0	1/10W	1	
	R3005	D0GBR00J0004	0	1/10W	1	
	R3007	D0GBR00J0004	0	1/10W	1	
	R3009	D0GB101JA065	100	1/10W	1	
	R3011	D0GB100JA065	10	1/10W	1	
	R3012	D0GD220JA052	22	1/8W	1	
	R3013	D0GD220JA052	22	1/8W	1	
	R3014	D0GD220JA052	22	1/8W	1	
	R3015	D0GD220JA052	22	1/8W	1	
	R3016	D0GBR00J0004	0	1/10W	1	
	R3017	D0GBR00J0004	0	1/10W	1	
	R3018	D0GBR00J0004	0	1/10W	1	
	R3019	D0GBR00J0004	0	1/10W	1	
	R3100	D0GB100JA065	10	1/10W	1	
	R3101	D0GB100JA065	10	1/10W	1	
	R3102	D0GB223JA065	22K	1/10W	1	
	R3103	D0GB101JA065	100	1/10W	1	
	R3104	D0GBR00J0004	0	1/10W	1	
	R3105	D0GB100JA065	10	1/10W	1	
	R3106	D0GD220JA052	22	1/8W	1	
	R3107	D0GD220JA052	22	1/8W	1	

Safety	Ref. No.	Part No.	Part Name & Description		Qty	Remarks
	R3108	D0GD220JA052	22	1/8W	1	
	R3109	D0GD220JA052	22	1/8W	1	
	R3110	D0GBR00J0004	0	1/10W	1	
	R3111	D0GBR00J0004	0	1/10W	1	
	R3112	D0GBR00J0004	0	1/10W	1	
	R3113	D0GBR00J0004	0	1/10W	1	
	R3114	D0GBR00J0004	0	1/10W	1	
	R3115	D0GBR00J0004	0	1/10W	1	
	R3200	D0GB100JA065	10	1/10W	1	
	R3201	D0GB100JA065	10	1/10W	1	
	R3202	D0GB223JA065	22K	1/10W	1	
	R3203	D0GB101JA065	100	1/10W	1	
	R3204	D0GBR00J0004	0	1/10W	1	
	R3205	D0GB100JA065	10	1/10W	1	
	R3206	D0GD220JA052	22	1/8W	1	
	R3207	D0GD220JA052	22	1/8W	1	
	R3208	D0GD220JA052	22	1/8W	1	
	R3209	D0GD220JA052	22	1/8W	1	
	R3210	D0GBR00J0004	0	1/10W	1	
	R3211	D0GBR00J0004	0	1/10W	1	
	R3300	D0GB100JA065	10	1/10W	1	AKX800
	R3301	D0GB100JA065	10	1/10W	1	AKX800
	R3302	D0GB223JA065	22K	1/10W	1	AKX800
	R3303	D0GB101JA065	100	1/10W	1	AKX800
	R3304	D0GBR00J0004	0	1/10W	1	AKX800
	R3305	D0GBR00J0004	0	1/10W	1	AKX800
	R3307	D0GBR00J0004	0	1/10W	1	AKX800
	R3309	D0GB101JA065	100	1/10W	1	AKX800
	R3311	D0GB100JA065	10	1/10W	1	AKX800
	R3312	D0GD220JA052	22	1/8W	1	AKX800
	R3313	D0GD220JA052	22	1/8W	1	AKX800
	R3314	D0GD220JA052	22	1/8W	1	AKX800
	R3315	D0GD220JA052	22	1/8W	1	AKX800
	R3316	D0GBR00J0004	0	1/10W	1	
	R3317	D0GBR00J0004	0	1/10W	1	
	R3500	D0GBR00J0004	0	1/10W	1	
	R3501	D0GBR00J0004	0	1/10W	1	
	R3505	D0GB104JA065	100K	1/10W	1	
	R3506	D0GB104JA065	100K	1/10W	1	
	R3507	D0GB3R3JA065	3.3	1/10W	1	
	R3508	D0GB3R3JA065	3.3	1/10W	1	
	R3509	D0GB104JA065	100K	1/10W	1	
	R3510	D0GB104JA065	100K	1/10W	1	
	R3511	D0GB3R3JA065	3.3	1/10W	1	
	R3512	D0GB3R3JA065	3.3	1/10W	1	
	R3517	D0GB104JA065	100K	1/10W	1	
	R3518	D0GB104JA065	100K	1/10W	1	
	R3519	D0GB3R3JA065	3.3	1/10W	1	
	R3520	D0GB3R3JA065	3.3	1/10W	1	
	R3521	D0GB104JA065	100K	1/10W	1	
	R3522	D0GB104JA065	100K	1/10W	1	
	R3523	D0GB3R3JA065	3.3	1/10W	1	
	R3524	D0GB3R3JA065	3.3	1/10W	1	
	R3525	D0GB104JA065	100K	1/10W	1	AKX800
	R3526	D0GB104JA065	100K	1/10W	1	AKX800
	R3527	D0GB3R3JA065	3.3	1/10W	1	AKX800
	R3528	D0GB3R3JA065	3.3	1/10W	1	AKX800
	R3533	D0GB822JA065	8.2K	1/10W	1	
	R3534	D0GB223JA065	22K	1/10W	1	
	R3535	D0GB104JA065	100K	1/10W	1	
	R3536	D0GB104JA065	100K	1/10W	1	
	R3537	D0GB472JA065	4.7K	1/10W	1	
	R3538	D0GBR00J0004	0	1/10W	1	
	R3541	D0GB101JA065	100	1/10W	1	
	R3542	D0GD220JA052	22	1/8W	1	AKX800
	R3543	D0GD220JA052	22	1/8W	1	AKX800
	R3544	D0GD220JA052	22	1/8W	1	AKX800
	R3545	D0GD220JA052	22	1/8W	1	AKX800
	R3546	D0GD220JA052	22	1/8W	1	
	R3547	D0GD220JA052	22	1/8W	1	
	R3548	D0GD220JA052	22	1/8W	1	
	R3549	D0GD220JA052	22	1/8W	1	
	R3550	D0GD220JA052	22	1/8W	1	

Safety	Ref. No.	Part No.	Part Name & Description		Qty	Remarks
	R3551	D0GD220JA052	22	1/8W	1	
	R3552	D0GD220JA052	22	1/8W	1	
	R3553	D0GD220JA052	22	1/8W	1	
	R3554	D0GD220JA052	22	1/8W	1	
	R3555	D0GD220JA052	22	1/8W	1	
	R3556	D0GD220JA052	22	1/8W	1	
	R3557	D0GD220JA052	22	1/8W	1	
	R3558	D0GB101JA065	100	1/10W	1	
	R3559	D0GBR00J0004	0	1/10W	1	
	R3560	D0GBR00J0004	0	1/10W	1	
	R4001	D0GB152JA065	1.5K	1/10W	1	
	R4002	D0GB105JA065	1M	1/10W	1	
	R4003	D0GBR00J0004	0	1/10W	1	
	R4004	D0GBR00J0004	0	1/10W	1	
	R4005	D0GBR00J0004	0	1/10W	1	
	R4006	D0GBR00J0004	0	1/10W	1	
	R4007	D0GB101JA065	100	1/10W	1	
	R4008	D0GB101JA065	100	1/10W	1	
	R4009	D0GB101JA065	100	1/10W	1	
	R4010	D0GB101JA065	100	1/10W	1	
	R4011	D0GB101JA065	100	1/10W	1	
	R4012	D0GB101JA065	100	1/10W	1	
	R4013	D0GB101JA065	100	1/10W	1	
	R4014	D0GB101JA065	100	1/10W	1	
	R4015	D0GB221JA065	220	1/10W	1	
	R4016	D0GB221JA065	220	1/10W	1	
	R4017	D0GBR00J0004	0	1/10W	1	
	R4018	D0GBR00J0004	0	1/10W	1	
	R4019	D0GB101JA065	100	1/10W	1	
	R4020	D0GB101JA065	100	1/10W	1	
	R4021	D0GBR00J0004	0	1/10W	1	
	R4022	D0GBR00J0004	0	1/10W	1	
	R4023	D0GB101JA065	100	1/10W	1	
	R4025	D0GB101JA065	100	1/10W	1	AKX800
	R4026	D0GB101JA065	100	1/10W	1	AKX800
	R4027	D0GB101JA065	100	1/10W	1	
	R4028	D0GBR00J0004	0	1/10W	1	
	R4029	D0GB101JA065	100	1/10W	1	AKX800
	R4030	D0GB101JA065	100	1/10W	1	AKX800
	R4031	D0GB101JA065	100	1/10W	1	AKX800
	R4035	D0GB101JA065	100	1/10W	1	AKX800
	R4048	D0GB681JA065	680	1/10W	1	AKX800
	R4049	D0GB104JA065	100K	1/10W	1	AKX800
	R4105	D0GB101JA065	100	1/10W	1	
	R4576	D0GB221JA065	220	1/10W	1	AKX800
	R4577	D0GB221JA065	220	1/10W	1	AKX800
	R4578	D0GB221JA065	220	1/10W	1	AKX800
	R4580	D0GB103JA065	10K	1/10W	1	AKX800
	R4588	D0GBR00J0004	0	1/10W	1	AKX800
	R4589	D0GDR00J0004	0	1/8W	1	
	R5005	D0GB683JA065	68K	1/10W	1	
	R5006	D0GB683JA065	68K	1/10W	1	
	R5007	D0GBR00J0004	0	1/10W	1	
	R5008	D0GB101JA065	100	1/10W	1	
	R5009	D0GB122JA065	1.2K	1/10W	1	
	R5010	D0GB102JA065	1K	1/10W	1	
	R5011	D0GB682JA065	6.8K	1/10W	1	
	R5012	D0GBR00J0004	0	1/10W	1	
	R5013	D0GB473JA065	47K	1/10W	1	
	R5014	D0GBR00J0004	0	1/10W	1	
	R5015	D0GBR00J0004	0	1/10W	1	
	R5016	D0GB104JA065	100K	1/10W	1	
	R5017	D0GBR00J0004	0	1/10W	1	
	R5018	D0GB153JA065	15K	1/10W	1	
	R5019	D0GB4R7JA065	4.7	1/10W	1	
	R5020	D0GB104JA065	100K	1/10W	1	
	R5021	D0GB4R7JA065	4.7	1/10W	1	
	R5022	D0GB102JA065	1K	1/10W	1	
	R5023	D0GBR00J0004	0	1/10W	1	
	R5037	D0GDR00J0004	0	1/8W	1	
	R5038	D0GDR00J0004	0	1/8W	1	
	R5039	D0GBR00J0004	0	1/10W	1	
	R6000	D0GB272JA065	2.7K	1/10W	1	AKX800

Safety	Ref. No.	Part No.	Part Name & Description		Qty	Remarks
	R6001	D0GB470JA065	47	1/10W	1	AKX800
	R6002	D0GB101JA065	100	1/10W	1	AKX800
	R6003	D0GB181JA065	180	1/10W	1	AKX800
	R6004	D0GB681JA065	680	1/10W	1	AKX800
	R6005	D0GB181JA065	180	1/10W	1	AKX800
	R6006	D0GB103JA065	10K	1/10W	1	
	R6007	D0GB103JA065	10K	1/10W	1	
	R6008	D0GB103JA065	10K	1/10W	1	
	R6009	D0GB103JA065	10K	1/10W	1	
	R6012	D0GB331JA065	330	1/10W	1	AKX800
	R6016	D0GB221JA065	220	1/10W	1	
	R6017	D0GB471JA065	470	1/10W	1	
	R6018	D0GB221JA065	220	1/10W	1	
	R6020	D0GBR00J0004	0	1/10W	1	
	R6021	D0GB153JA065	15K	1/10W	1	
	R6022	D0GB103JA065	10K	1/10W	1	
	R6023	D0GB123JA065	12K	1/10W	1	
	R6025	D0GB562JA065	5.6K	1/10W	1	
	R6026	D0GB220JA065	22	1/10W	1	
	R6027	D0GB1R0JA065	1.0	1/10W	1	
	R6028	D0GB1R0JA065	1.0	1/10W	1	
	R6029	D0GB473JA065	47K	1/10W	1	
	R6030	D0GBR00J0004	0	1/10W	1	
	R6032	D0GB100JA065	10	1/10W	1	
	R6033	D0GB223JA065	22K	1/10W	1	
	R6035	D0GB272JA065	2.7K	1/10W	1	
	R6036	D0GB272JA065	2.7K	1/10W	1	
	R6037	D0GBR00J0004	0	1/10W	1	
	R6038	D0GB103JA065	10K	1/10W	1	
	R6100	D0GB103JA065	10K	1/10W	1	
	R6101	D0GB472JA065	4.7K	1/10W	1	
	R6103	D0GBR00J0004	0	1/10W	1	AKX600
	R6104	D0GB103JA065	10K	1/10W	1	
	R6104	D0GBR00J0004	0	1/10W	1	AKX800
	R6105	D0GB472JA065	4.7K	1/10W	1	
	R6105	D0GB271JA065	270	1/10W	1	AKX600
	R6105	D0GB151JA065	150	1/10W	1	AKX800
	R6106	D0GB472JA065	4.7K	1/10W	1	
	R6106	D0GB821JA065	820	1/10W	1	AKX600
	R6106	D0GB391JA065	390	1/10W	1	AKX800
	R6107	D0GB472JA065	4.7K	1/10W	1	
	R6107	D0GB271JA065	270	1/10W	1	AKX600
	R6107	D0GB151JA065	150	1/10W	1	AKX800
	R6108	D0GB102JA065	1K	1/10W	1	
	R6109	D0GB102JA065	1K	1/10W	1	
	R6110	D0GB103JA065	10K	1/10W	1	
	R6111	D0GB103JA065	10K	1/10W	1	
	R6112	D0GB102JA065	1K	1/10W	1	
	R6112	D0GB821JA065	820	1/10W	1	AKX600
	R6112	D0GB391JA065	390	1/10W	1	AKX800
	R6113	D0GB102JA065	1K	1/10W	1	
	R6113	D0GB471JA065	470	1/10W	1	AKX600
	R6113	D0GB221JA065	220	1/10W	1	AKX800
	R6114	D0GBR00J0004	0	1/10W	1	
	R6115	D0GBR00J0004	0	1/10W	1	
	R6115	J0JCC0000309	INDUCTOR		1	
	R6116	D0GBR00J0004	0	1/10W	1	
	R6116	J0JBC0000010	INDUCTOR		1	
	R6117	D0GB103JA065	10K	1/10W	1	
	R6117	J0JBC0000010	INDUCTOR		1	
	R6118	D0GB103JA065	10K	1/10W	1	
	R6118	D0GBR00J0004	0	1/10W	1	
	R6119	J0JBC0000010	INDUCTOR		1	
	R6120	D0GBR00J0004	0	1/10W	1	
	R6121	D0GBR00J0004	0	1/10W	1	
	R6122	D0GB471JA065	470	1/10W	1	AKX600
	R6122	D0GB221JA065	220	1/10W	1	AKX800
	R6123	D0GBR00J0004	0	1/10W	1	
	R6124	D0GBR00J0004	0	1/10W	1	
	R6125	D0GBR00J0004	0	1/10W	1	
	R6126	D0GBR00J0004	0	1/10W	1	
	R6148	D0GB473JA065	47K	1/10W	1	
	R6149	D0GB473JA065	47K	1/10W	1	

Safety	Ref. No.	Part No.	Part Name & Description	Qty	Remarks
	R6150	D0GB103JA065	10K 1/10W	1	
	R6151	D0GB103JA065	10K 1/10W	1	
	R6401	D0GB474JA065	470K 1/10W	1	
	R6402	D0GB474JA065	470K 1/10W	1	
	R7701	D0GBR00J0004	0 1/10W	1	
	R7702	D0GBR00J0004	0 1/10W	1	
	R7703	D0GBR00J0004	0 1/10W	1	
	R7704	D0GBR00J0004	0 1/10W	1	
	R7705	D0GBR00J0004	0 1/10W	1	
	R9003	D0GB222JA065	2.2K 1/10W	1	
	R9008	D0GB331JA065	330 1/10W	1	
	R9009	D0GB104JA065	100K 1/10W	1	
	R9010	D0GB331JA065	330 1/10W	1	
	R9011	D0GB104JA065	100K 1/10W	1	
	R9012	D0GB222JA065	2.2K 1/10W	1	
	R9013	D0GDR00J0004	0 1/8W	1	
	R9031	D0GB123JA065	12K 1/10W	1	
	R9039	D0GB123JA065	12K 1/10W	1	
	R9040	D0GB223JA065	22K 1/10W	1	
	R9041	D0GB223JA065	22K 1/10W	1	
			RESISTOR NET-WORKS		
	RX5001	D1H81034A042	RESISTOR NETWORK	1	
			CAPACITORS		
	C51	F1H1H102B047	1000pF 50V	1	
	C52	F1H1A474A107	0.47uF 10V	1	
	C61	F1H1H104B047	0.1uF 50V	1	
	C62	F1H1H104B047	0.1uF 50V	1	
	C63	F1H1H6R0B050	6.0pF 50V	1	
	C64	F1H1H3R0B050	3.0pF 50V	1	
	C65	F1H1H3R0B050	3.0pF 50V	1	
	C66	F1H1H330B052	33pF 50V	1	
	C67	F1H1H3R0B050	3.0pF 50V	1	
	C1001	F1H1C104A178	0.1uF 16V	1	
	C1002	F1H1C104A178	0.1uF 16V	1	
	C1003	F1H1C104A178	0.1uF 16V	1	
	C1004	F1H1C104A178	0.1uF 16V	1	
	C1005	F1H1C104A178	0.1uF 16V	1	
	C1006	F1H1C104A178	0.1uF 16V	1	
	C1007	F1H1C104A178	0.1uF 16V	1	
	C1008	F1H1C104A178	0.1uF 16V	1	
	C1009	F1H1C104A178	0.1uF 16V	1	
	C1010	F1H0J1060006	10uF 6.3V	1	
	C1011	F1H1C104A178	0.1uF 16V	1	
	C1012	F1H1C224A178	0.22uF 16V	1	
	C1013	F1H1A335A083	3.3uF 10V	1	
	C1014	F2A1C101A243	100uF 16V	1	
	C1015	F1H1C104A178	0.1uF 16V	1	
	C1016	F1H1H681B052	680pF 50V	1	
	C1017	F2A0J331B035	330uF 6.3V	1	
	C1018	F1H1C104A178	0.1uF 16V	1	
	C1019	F1H1C104A178	0.1uF 16V	1	
	C1020	F1H0J1060006	10uF 6.3V	1	
	C1021	F1H0J1060006	10uF 6.3V	1	
	C1022	F1H0J1060006	10uF 6.3V	1	
	C1023	F1H0J1060006	10uF 6.3V	1	
	C1024	F1H0J1060006	10uF 6.3V	1	
	C1025	F1H0J1060012	10uF 6.3V	1	
	C1026	F1H1H9R0A920	9.0pF 50V	1	
	C1027	F1H1H9R0A920	9.0pF 50V	1	
	C1028	F1H1H270B052	27pF 50V	1	
	C1029	F1H1H270B052	27pF 50V	1	
	C1030	F1H1H101B052	100pF 50V	1	
	C1031	F1H1H102B047	1000pF 50V	1	
	C1032	F1H1H102B047	1000pF 50V	1	
	C1033	F1H1H102B047	1000pF 50V	1	
	C1034	F1H1H102B047	1000pF 50V	1	
	C1035	F1H1H102B047	1000pF 50V	1	
	C1036	F1H1H102B047	1000pF 50V	1	

Safety	Ref. No.	Part No.	Part Name & Description	Qty	Remarks
	C1040	F1H1C104A178	0.1uF 16V	1	
	C1041	F1H1C104A178	0.1uF 16V	1	
	C1042	F1H1C224A178	0.22uF 16V	1	
	C1043	F1H1E223A161	0.022uF 25V	1	
	C1047	F1H1C104A178	0.1uF 16V	1	
	C1048	F1H1H102B047	1000pF 50V	1	
	C1049	F1H1H102B047	1000pF 50V	1	
	C1201	F1G1H101A834	100pF 50V	1	
	C1202	F1G1H101A834	100pF 50V	1	
	C1203	F1G1H101A834	100pF 50V	1	
	C1204	F1H0J4750004	4.7uF 6.3V	1	
	C1205	F1H1C104A178	0.1uF 16V	1	
	C1206	F1H0J1060006	10uF 6.3V	1	
	C2001	F1H1C104A178	0.1uF 16V	1	
	C2002	F1H1C104A178	0.1uF 16V	1	
	C2003	F1H1C104A178	0.1uF 16V	1	
	C2004	F1H0J4750004	4.7uF 6.3V	1	
	C2005	F1H1C104A178	0.1uF 16V	1	
	C2006	F1H1C104A178	0.1uF 16V	1	
	C2007	F1H1C104A178	0.1uF 16V	1	
	C2008	F1H1C104A178	0.1uF 16V	1	
	C2009	F1H0J1060012	10uF 6.3V	1	
	C2010	F1H1A105A113	1uF 10V	1	
	C2011	F1H1A105A113	1uF 10V	1	
	C2012	F1H1C104A178	0.1uF 16V	1	
	C2013	F1H1C104A178	0.1uF 16V	1	
	C2100	F1J1A106A043	10uF 10V	1	
	C2101	F1J1A106A043	10uF 10V	1	
	C2102	F1H1H104B047	0.1uF 50V	1	
	C2104	F1J1A106A043	10uF 10V	1	
	C2107	F2A1A221B161	220uF 10V	1	
	C2108	F1J1A106A043	10uF 10V	1	
	C2113	F2A0J101B034	100uF 6.3V	1	
	C2115	F2A1E330B389	33uF 25V	1	
	C2117	F1H1H104B047	0.1uF 50V	1	
	C2118	F1H1E105A153	1uF 25V	1	
	C2121	F1J1A106A043	10uF 10V	1	
	C2124	F2A0J221B034	220uF 6.3V	1	
	C2126	F1H1H104B047	0.1uF 50V	1	
	C2128	F1K1H475A234	4.7uF 50V	1	
	C2129	F1H1E105A153	1uF 25V	1	
	C2130	F2A0J101B034	100uF 6.3V	1	
	C2131	F1H1E105A153	1uF 25V	1	
	C2132	F2A0J221B034	220uF 6.3V	1	
	C2133	F1H1H103B047	0.01uF 50V	1	
	C2134	F1H1H103B047	0.01uF 50V	1	
	C2135	F2A1E221B422	220uF 25V	1	
	C2136	F1H1H103B047	0.01uF 50V	1	
	C2137	F2A1H3320022	3300uF 50V	1	
	C2138	F1G1H102A830	1000pF 50V	1	
	C2139	F1H1H103B047	0.01uF 50V	1	
	C2140	F1H1H470B052	47pF 50V	1	
	C2142	F1J1E106A253	10uF 25V	1	
	C2143	F2A0J102A247	1000uF 6.3V	1	
	C2144	F1H1H104B047	0.1uF 50V	1	
	C2145	F1H1H104B047	0.1uF 50V	1	
	C2147	F1H1H122B047	1200pF 50V	1	
	C2148	F1K1H475A234	4.7uF 50V	1	
	C2149	F1J1E106A253	10uF 25V	1	
	C2150	F1H1H103B047	0.01uF 50V	1	
	C2151	F1G1H472A830	4700pF 50V	1	
	C2152	F1H1H104B047	0.1uF 50V	1	
	C2153	F1G1H220A834	22pF 50V	1	
	C2155	F2A1E101B416	100uF 25V	1	
	C2164	F1H1A105A113	1uF 10V	1	
	C2165	F1H1A105A113	1uF 10V	1	
	C2167	F1J1A106A043	10uF 10V	1	
	C2168	F1J1A106A043	10uF 10V	1	
	C2171	F2A1H4710072	470uF 50V	1	
	C2174	F1H1H104B047	0.1uF 50V	1	
	C2176	F1H1H104B047	0.1uF 50V	1	
	C2177	F1H1H104B047	0.1uF 50V	1	
	C2179	F1H1H104B047	0.1uF 50V	1	

Safety	Ref. No.	Part No.	Part Name & Description	Qty	Remarks
	C2180	F1H1H104B047	0.1uF 50V	1	
	C2181	F1H1H104B047	0.1uF 50V	1	
	C2182	F1H1H104B047	0.1uF 50V	1	
	C2183	F1H1H104B047	0.1uF 50V	1	
	C2187	F1H1H681B052	680pF 50V	1	
	C2507	F1H1H103B047	0.01uF 50V	1	
	C2509	F1H1H102A831	1000pF 50V	1	
	C2510	F1H1H102A831	1000pF 50V	1	
	C2512	F1H1H102A831	1000pF 50V	1	
	C2513	F1H1H102A831	1000pF 50V	1	
	C2534	F1H1C104A178	0.1uF 16V	1	AKX800
	C2535	F1H1C104A178	0.1uF 16V	1	AKX800
	C2536	F1H1C104A178	0.1uF 16V	1	AKX800
	C2537	F1H1C104A178	0.1uF 16V	1	AKX800
	C3000	F2A1C330B453	33uF 16V	1	
	C3001	F1J1C106A224	10uF 16V	1	
	C3002	F1H1H104B047	0.1uF 50V	1	
	C3003	F1H1H104B047	0.1uF 50V	1	
	C3004	F1H1H104B047	0.1uF 50V	1	
	C3005	F1H1H104B047	0.1uF 50V	1	
	C3006	F1H1H104B047	0.1uF 50V	1	
	C3007	F1H1H104B047	0.1uF 50V	1	
	C3008	F1H1H333B047	0.033uF 50V	1	
	C3009	F1H1H333B047	0.033uF 50V	1	
	C3010	F1H1H104B047	0.1uF 50V	1	
	C3011	F1K1H105A250	1uF 50V	1	
	C3012	F1K1H105A250	1uF 50V	1	
	C3013	F1H1H102B047	1000pF 50V	1	
	C3014	F1H1H102B047	1000pF 50V	1	
	C3018	F1H1H104B047	0.1uF 50V	1	
	C3019	F1K1H105A250	1uF 50V	1	
	C3020	F1K1H105A250	1uF 50V	1	
	C3021	F1H1H102B047	1000pF 50V	1	
	C3022	F1H1H102B047	1000pF 50V	1	
	C3026	F1H1H333B047	0.033uF 50V	1	
	C3027	F1H1H333B047	0.033uF 50V	1	
	C3100	F1J1C1060006	10uF 16V	1	
	C3101	F1H1H104B047	0.1uF 50V	1	
	C3102	F1H1H104B047	0.1uF 50V	1	
	C3103	F1H1H104B047	0.1uF 50V	1	
	C3104	F1H1H104B047	0.1uF 50V	1	
	C3105	F1H1H104B047	0.1uF 50V	1	
	C3106	F1H1H104B047	0.1uF 50V	1	
	C3107	F1H1H333B047	0.033uF 50V	1	
	C3108	F1H1H333B047	0.033uF 50V	1	
	C3109	F1H1H102B047	1000pF 50V	1	
	C3110	F1H1H102B047	1000pF 50V	1	
	C3111	F1H1H104B047	0.1uF 50V	1	
	C3112	F1K1H105A250	1uF 50V	1	
	C3113	F1K1H105A250	1uF 50V	1	
	C3117	F1H1H104B047	0.1uF 50V	1	
	C3118	F1K1H105A250	1uF 50V	1	
	C3119	F1K1H105A250	1uF 50V	1	
	C3120	F1H1H102B047	1000pF 50V	1	
	C3121	F1H1H102B047	1000pF 50V	1	
	C3122	F1H1H333B047	0.033uF 50V	1	
	C3123	F1H1H333B047	0.033uF 50V	1	
	C3200	F1J1C1060006	10uF 16V	1	
	C3201	F1H1H104B047	0.1uF 50V	1	
	C3202	F1H1H104B047	0.1uF 50V	1	
	C3203	F1H1H104B047	0.1uF 50V	1	
	C3204	F1H1H104B047	0.1uF 50V	1	
	C3205	F1H1H104B047	0.1uF 50V	1	
	C3206	F1H1H104B047	0.1uF 50V	1	
	C3207	F1H1H333B047	0.033uF 50V	1	
	C3208	F1H1H333B047	0.033uF 50V	1	
	C3209	F1H1H102B047	1000pF 50V	1	
	C3210	F1H1H102B047	1000pF 50V	1	
	C3211	F1H1H104B047	0.1uF 50V	1	
	C3212	F1K1H105A250	1uF 50V	1	
	C3213	F1K1H105A250	1uF 50V	1	
	C3217	F1H1H104B047	0.1uF 50V	1	
	C3218	F1K1H105A250	1uF 50V	1	

Safety	Ref. No.	Part No.	Part Name & Description	Qty	Remarks
	C3219	F1K1H105A250	1uF 50V	1	
	C3220	F1H1H102B047	1000pF 50V	1	
	C3221	F1H1H102B047	1000pF 50V	1	
	C3222	F1H1H333B047	0.033uF 50V	1	
	C3223	F1H1H333B047	0.033uF 50V	1	
	C3301	F1J1C106A059	10uF 16V	1	AKX800
	C3302	F1H1H104B047	0.1uF 50V	1	AKX800
	C3303	F1H1H104B047	0.1uF 50V	1	AKX800
	C3304	F1H1H104B047	0.1uF 50V	1	AKX800
	C3305	F1H1H104B047	0.1uF 50V	1	AKX800
	C3306	F1H1H104B047	0.1uF 50V	1	AKX800
	C3307	F1H1H104B047	0.1uF 50V	1	AKX800
	C3308	F1H1H333B055	0.033uF 50V	1	AKX800
	C3309	F1H1H333B055	0.033uF 50V	1	AKX800
	C3310	F1H1H104B047	0.1uF 50V	1	AKX800
	C3311	F1K1H105A250	1uF 50V	1	AKX800
	C3312	F1K1H105A250	1uF 50V	1	AKX800
	C3313	F1H1H102B047	1000pF 50V	1	AKX800
	C3314	F1H1H102B047	1000pF 50V	1	AKX800
	C3318	F1H1H104B047	0.1uF 50V	1	AKX800
	C3319	F1K1H105A250	1uF 50V	1	AKX800
	C3320	F1K1H105A250	1uF 50V	1	AKX800
	C3321	F1H1H102B047	1000pF 50V	1	AKX800
	C3322	F1H1H102B047	1000pF 50V	1	AKX800
	C3326	F1H1H333B055	0.033uF 50V	1	AKX800
	C3327	F1H1H333B055	0.033uF 50V	1	AKX800
	C3502	F1H1H104B047	0.1uF 50V	1	
	C3503	F1H1H104B047	0.1uF 50V	1	
	C3504	F1H1H104B047	0.1uF 50V	1	
	C3506	F1H1H104B047	0.1uF 50V	1	
	C3508	F1H1H104B047	0.1uF 50V	1	
	C3509	F1H1H104B047	0.1uF 50V	1	
	C3510	F1H1H104B047	0.1uF 50V	1	
	C3511	F1H1H104B047	0.1uF 50V	1	
	C3512	F1H1H104B047	0.1uF 50V	1	AKX800
	C3513	F1H1H104B047	0.1uF 50V	1	AKX800
	C3522	F1H1H103B047	0.01uF 50V	1	
	C3523	F1H1H103B047	0.01uF 50V	1	
	C3526	F1H1H103B047	0.01uF 50V	1	
	C3527	F1H1H103B047	0.01uF 50V	1	
	C3534	F1H1H103B047	0.01uF 50V	1	
	C3535	F1H1H103B047	0.01uF 50V	1	
	C3538	F1H1H103B047	0.01uF 50V	1	
	C3539	F1H1H103B047	0.01uF 50V	1	
	C3542	F1H1H103B047	0.01uF 50V	1	AKX800
	C3543	F1H1H103B047	0.01uF 50V	1	AKX800
	C3548	D0GBR00J0004	0 1/10W	1	
	C3549	F1J1A106A043	10uF 10V	1	
	C3550	F1J1A106A043	10uF 10V	1	
	C3551	F1H1E105A153	1uF 25V	1	
	C3553	ECQV1H474JL3	0.47uF 50V	1	
	C3554	ECQV1H474JL3	0.47uF 50V	1	
	C3557	ECQV1H474JL3	0.47uF 50V	1	
	C3558	ECQV1H474JL3	0.47uF 50V	1	
	C3560	ECQV1H474JL3	0.47uF 50V	1	
	C3561	ECQV1H474JL3	0.47uF 50V	1	
	C3562	ECQV1H474JL3	0.47uF 50V	1	
	C3563	ECQV1H474JL3	0.47uF 50V	1	
	C3565	ECQV1H474JL3	0.47uF 50V	1	AKX800
	C3566	ECQV1H474JL3	0.47uF 50V	1	AKX800
	C4001	F1H1H101B052	100pF 50V	1	
	C4002	F1H0J105A051	1uF 6.3V	1	
	C4003	F1H0J105A051	1uF 6.3V	1	
	C4004	F1H1C474A178	0.47uF 16V	1	
	C4005	F1H1H120B052	12pF 50V	1	
	C4006	F1H1H120B052	12pF 50V	1	
	C4007	F1H0J105A051	1uF 6.3V	1	
	C4008	F1H0J105A051	1uF 6.3V	1	
	C4009	F1H0J105A051	1uF 6.3V	1	
	C4010	F1H1H102B047	1000pF 50V	1	
	C4011	F1H1H102B047	1000pF 50V	1	
	C4012	F1H1H121A702	120uF 50V	1	
	C4013	F1H1H121A702	120uF 50V	1	

Safety	Ref. No.	Part No.	Part Name & Description	Qty	Remarks
	C4017	F1H0J1060012	10uF 6.3V	1	
	C4018	F2A1C470A155	47uF 16V	1	
	C4019	F2A1C220A243	22uF 16V	1	
	C4020	F2A1C220A243	22uF 16V	1	
	C4021	F1H1H101B052	100pF 50V	1	
	C4041	F1H1H473A748	0.047uF 50V	1	AKX800
	C4042	F1H1H473A748	0.047uF 50V	1	AKX800
	C4043	F1H1H473A748	0.047uF 50V	1	AKX800
	C4044	F1H1H473A748	0.047uF 50V	1	AKX800
	C4454	F1H1H104B047	0.1uF 50V	1	AKX800
	C4455	F1H1H104B047	0.1uF 50V	1	AKX800
	C4456	F1H1H104B047	0.1uF 50V	1	AKX800
	C4458	F1H1H104B047	0.1uF 50V	1	AKX800
	C4459	F1H1A105A113	1uF 10V	1	AKX800
	C4460	F1H1A105A113	1uF 10V	1	AKX800
	C4582	F1H1A105A113	1uF 10V	1	AKX800
	C5007	F1H1H222A219	2200pF 50V	1	
	C5008	F1H1H222A219	2200pF 50V	1	
	C5009	F1J1A106A043	10uF 10V	1	
	C5010	F1H1H103B047	0.01uF 50V	1	
	C5011	F1H1C104A178	0.1uF 16V	1	
	C5012	F1H1H102B047	1000pF 50V	1	
	C5013	F1H1H101B052	100pF 50V	1	
	C5014	F1H1H100B051	10pF 50V	1	
	C5015	F1H1H100B051	10pF 50V	1	
	C5016	F1H1H100B051	10pF 50V	1	
	C5018	F1H1H103B047	0.01uF 50V	1	
	C5019	F2A1A1010072	100uF 10V	1	
	C5020	F2A1A1010072	100uF 10V	1	
	C5021	F2A1A1010072	100uF 10V	1	
	C5022	F1H1H680B052	68pF 50V	1	
	C5101	F1H1C104A008	0.1uF 16V	1	
	C5102	F1H1C104A008	0.1uF 16V	1	
	C5103	F1H1C104A008	0.1uF 16V	1	
	C5104	F1H1C104A008	0.1uF 16V	1	
	C5114	F1H1H101B052	100pF 50V	1	
	C5115	F1H1H101B052	100pF 50V	1	
	C5116	F1H1H101B052	100pF 50V	1	
	C5117	F1H1H102B047	1000pF 50V	1	
	C5118	F1H1H101B052	100pF 50V	1	
	C5119	F1H1H102B047	1000pF 50V	1	
	C5120	F1H1H102B047	1000pF 50V	1	
	C5121	F1H1H101B052	100pF 50V	1	
	C5122	F1H1H101B052	100pF 50V	1	
	C6000	F1H1H104B047	0.1uF 50V	1	AKX800
	C6003	F1H1H101B052	100pF 50V	1	
	C6004	F1H1H101B052	100pF 50V	1	
	C6005	F1H1H101B052	100pF 50V	1	
	C6006	F1H1H101B052	100pF 50V	1	
	C6007	F1H1H101B052	100pF 50V	1	
	C6008	F1H1H331B052	330pF 50V	1	
	C6009	F1H1H101B052	100pF 50V	1	
	C6010	F1H1H331B052	330pF 50V	1	
	C6011	F1H1H101B052	100pF 50V	1	
	C6012	F1H1H331B052	330pF 50V	1	
	C6013	F1H1H101B052	100pF 50V	1	
	C6014	F1H1H101B052	100pF 50V	1	
	C6015	F1H1H101B052	100pF 50V	1	
	C6016	F1H1H101B052	100pF 50V	1	
	C6017	F1H1H103A219	0.01uF 50V	1	
	C6018	F1H1H101B052	100pF 50V	1	
	C6021	F2A1E101B416	100uF 25V	1	
	C6022	F1H1H472A219	4700pF 50V	1	
	C6023	F2A1H101A147	100uF 50V	1	
	C6024	F2A1C101A115	100uF 16V	1	
	C6027	F2A1H220A216	22uF 50V	1	
	C6028	F2A1H220A216	22uF 50V	1	
	C6030	F2A1E221B422	220uF 25V	1	
	C6031	F2A0J471B035	470uF 6.3V	1	
	C6101	F1H1C104A178	0.1uF 16V	1	
	C6102	F1H1H561B052	560pF 50V	1	
	C6103	F1H1H561B052	560pF 50V	1	
	C6106	F1H1A105A113	1uF 10V	1	

Safety	Ref. No.	Part No.	Part Name & Description	Qty	Remarks
	C6107	F1H1A105A113	1uF 10V	1	
	C6108	F1H1A105A113	1uF 10V	1	
	C6109	F1H1A105A113	1uF 10V	1	
	C6110	F1J1C1060006	10uF 16V	1	
	C6120	F1H1H221B047	220pF 50V	1	
	C6121	F1H1H221B047	220pF 50V	1	
	C6122	F1H1A105A113	1uF 10V	1	
	C6123	F1H1A105A113	1uF 10V	1	
	C6217	F1H1A105A113	1uF 10V	1	
	C6318	F1H1H331B052	330pF 50V	1	
	C6319	F1H1H331B052	330pF 50V	1	
	C6320	F1H1H101B052	100pF 50V	1	
	C6321	F1H1H101B052	100pF 50V	1	
	C6400	F1H1H104B047	0.1uF 50V	1	
	C6401	F1H1H104B047	0.1uF 50V	1	
	C6822	F1H1H101B052	100pF 50V	1	
	C6823	F1H1H101B052	100pF 50V	1	
	C6824	F1H1H101B052	100pF 50V	1	
	C6825	F1H1H101B052	100pF 50V	1	
	C6830	F1H1H101B052	100pF 50V	1	
	C6831	F1H1H102A219	1000pF 50V	1	
	C6832	F1J1A106A043	10uF 10V	1	
	C7701	F1G1C104A146	0.1uF 16V	1	
	C9001	F1H1C104A178	0.1uF 16V	1	
	C9002	F1H1C104A178	0.1uF 16V	1	
	C9003	F1H1C104A178	0.1uF 16V	1	
	C9004	F1H1C104A178	0.1uF 16V	1	
	C9005	F1H1C104A178	0.1uF 16V	1	