ORDER NO. AD9109206C8

Service Manual

CD Stereo System

CD Stereo System

SA-CH55

Color

(K) ..... Black Type

COMPACT disc DIGITAL AUDIO

DOLBY B NR

*Dolby noise reduction manufactured under license from Dolby Laboratories Licensing Corporation.
"Dolby" and the double-D symbol are trade marks of Dolby Laboratories Licensing Corporation.

Areas

Country Code	Area	Color
(E)	Continental Europe.	(K)
(EB)	Great Britain.	
(EG)	Germany and Italy.	
(GC)	Asia, Latin America, Middle Near East and Africa.	
(GN)	Oceania.	

■ SPECIFICATIONS (DIN 45 500)

AMPLIFIER SECTION

40 Hz–16 kHz continuous power output	
both channels driven	2×20 W (THD 1%, 6Ω)
1 kHz continuous power output	
both channels driven	2×30 W (THD 1%, 6Ω) (at 240 V)
MPO	2×120 W (THD 10%, 6Ω)
PMPO	240 W (THD 10%, 6Ω)
Total harmonic distortion	
half power at 1 kHz	0.07% (6Ω)
Frequency responce	
PHONO	30 Hz–15 kHz
	RIAA standard curve ±1 dB
Input sensitivity and impedance	
PHONO	3 mV/47 kΩ
Graphic equalizer	(63 Hz, 160 Hz, 400 Hz, 1 kHz, 2.5 kHz, 6.3 kHz, 12.5 kHz)

FM TUNER SECTION

Frequency range	87.50–108.00 MHz (0.05 MHz steps)
Sensitivity	14.7 dBf (1.5 μV, IHF'58)
S/N 26 dB	1.3 μV (40 kHz mod., 75Ω)
Total harmonic distortion	
MONO	0.2%
STEREO	0.3%
S/N	
MONO	70 dB (75 dB, IHF)
Alternate channel selectivity ±400 kHz	70 dB
Image rejection at 98 MHz	80 dB
Stereo separation	
1 kHz	35 dB
Antenna terminal(s)	75Ω (unbalanced)

MW/LW TUNER SECTION

Frequency range	
MW	522–1611 kHz (9 kHz steps)
	530–1620 kHz (10 kHz steps)
LW	144–288 kHz (9 kHz steps)
Sensitivity (S/N 20 dB)	
MW (at 999 kHz, 1000 kHz)	500 μV/m
LW (at 254 kHz)	50 μV

CASSETTE DECK SECTION

Track system	4 track, 2 channel
Heads	
Playback	Permalloy head
Record/playback	Permalloy head
Erasure	Double gap ferrite head

System: SC-CH55

Moter	DC servo moter
Recording system	AC bias, 100 kHz
Tape speed	4.8 cm/sec
Frequency responce	
NORMAL	40 Hz–14 kHz (+3, −6 dB)
CrO_2	40 Hz–14 kHz (+3, −6 dB)
METAL	40 Hz–15 kHz (+3, −6 dB)
S/N (CrO_2 type tape)	
Dolby NR off	52 dB (A-WTD)
Dolby NR on	61 dB (CCIR)
Wow and flutter	0.1% (WRMS)
Fast forward and rewind time	Approx. 110 seconds with C-60 cassette tape

CD SECTION

Number of channels	Stereo
Sampling frequency	44.1 kHz
Decording	16-bit linear
Beam Source/wave length	Semiconductor laser/780 nm
Frequency response	20 Hz–20 kHz (+1, −2 dB)
S/N	95 dB Filter (JIS.A)
Wow & Flutter	Below measurable limit
Digital filter	4 fs

GENERAL

Power consumption	180 W
Power supply	
For Great Britain and Oceania	AC 50/60 Hz, 230~240 V
For Germany, Italy and Continental Europe	AC 50/60 Hz, 230 V
For others	AC 50/60 Hz, 110 V~127 V/220 V~240 V
Dimensions (W×H×D)	215×329×338 mm
Weight	7.7 kg

Notes:

1. Specifications are subject to change without notice.
2. Weight and dimensions are approximate.
3. Total harmonic distortion is measured by the digital spectrum analyzer.

System	Unit	
	Center	Speakers
SC-CH55	SA-CH55	SB-CH55 E, EB, EG: Service Manual Supplied from PAES

Panasonic

■ CONTENTS

■ PRECAUTION OF LASER DIODE

CAUTION: This product utilizes a laser diode with the unit turned "on", invisible laser radiation is emitted from the pick up lens.
Wave length: 780 nm
Maximum output radiation power from pick up: 100 µW/VDE

Laser radiation from the pick up lens is safety level, but be sure the followings:

1. Do not disassemble the optical pick up unit, since radiation from exposed laserd diode is dangerous.
2. Do not adjust the variable resistor on the pickup unit. It was already adjusted.
3. Do not look at the focus lens using optical instruments.
4. Recommend not to look at pick up lens for a long time.

ACHTUNG: Dieses produkt enthält eine laserdiode. Im eingeschalteten zustand wird unsichtbare laserstrahlung von der lasereinhelt abgestrahlt.

Wellenlänge: 780 nm
Maximale strahlungsleistung der lasereinhelt: 100 µW/VDE

Die strahlung an der lasereinheit ist ungefährlich, wenn folgende punkte beachtet werden:

1. Die lasereinhelt nicht zerlegen, da die strahlung an der freigelegten laserdiode gefährlich ist.
2. Den werksseitig justierten einstellregler der lasereinreit nicht verstellen.
3. Nicht mit optischen instrumenten in die fokussierlinse blicken.
4. Nicht über längere zeit in die fokussierlinse blicken.

ADVARSEL: I dette a apparat anvendes laser.

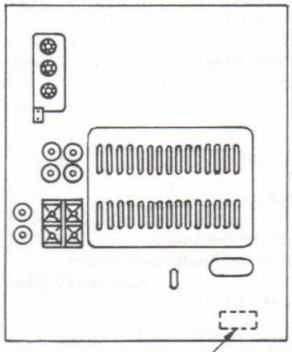

ADVARSEL: USYNLIG LASERSTRÅLING VED ÅBNING, NÅR SIKKERHEDSAF-BRYDERE ER UDE AF FUNKTION. UNDGÅ UDSÆTTELSE FOR STRÅLING.

VARO! Avattaessa ja suojalukitus ohitettaessa olet alttiina näkymättömälle lasersäteilylle. Älä katso säteeseen.

VORSICHT-Unsichtbare Laserstrahlung, wenn Abdeckung geöffnet. Nicht dem Strahl aussetzen. RQLS0021

DANGER-Invisible laser radiation when open. AVOID DIRECT EX-POSURE TO BEAM.

VARNING! Osynlig laserstrålning när denna del är öppnad och spärren är urkopplad. Betrakta ej strålen. RQLS0051

CLASS 1
LASER PRODUCT

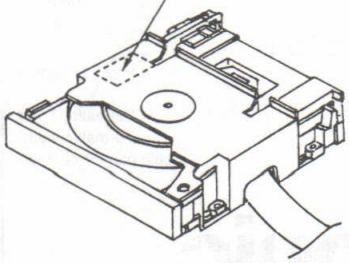

LUOKAN 1 LASERLAITE
KLASS 1 LASER APPARAT

■ HANDLING PRECAUTIONS FOR TRAVERSE DECK

The laser diode in the traverse deck (optical pickup) may break down due to potential difference caused by static electricity of clothes or human body.
So, be careful of electrostatic breakdown during repair of the traverse deck (optical pickup).

•Handling of traverse deck (optical pickup)

1. Do not subject the traverse deck (optical pickup) to static electricity as it is extremely sensitive to electrical shock.
2. To prevent the breakdown of the laser diode, an anti-static shorting pin is inserted into the flexible board (FPC board). When removing or connecting the short pin, finish the job in as short time as possible.
3. Take care not to apply excessive stress to the flexible board (FPC board).
4. Do not turn the variable resistor (laser power adjustment). It has already been adjusted.

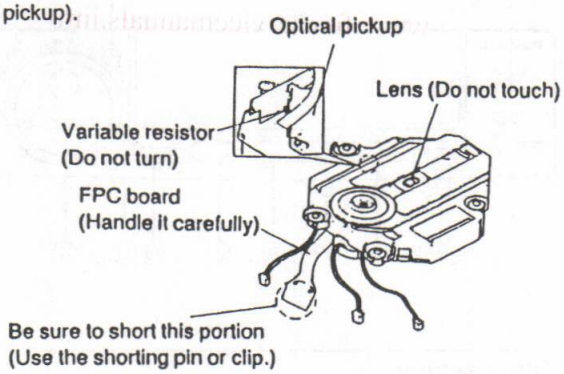

•Grounding for electrostatic breakdown prevention

1. Human body grounding
   Use the anti-static wrist strap to discharge the static electricity from your body.
2. Work table grounding
   Put a conductive material (sheet) or steel sheet on the area where the traverse deck (optical pickup) is placed, and ground the sheet.

Caution:
The static electricity of your clothes will not be grounded through the wrist strap. So, take care not to let your clothes touch the traverse deck (optical pickup).

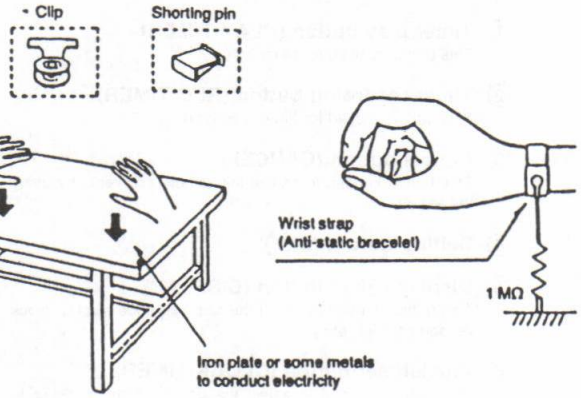

■ ACCESSORIES

AC power supply cord
<RJA0019-K> (E/EG) . . 1 pc.
<SJA193> (EB) . . . . . 1 pc.
<RJA0004> (GC) . . . . . 1 pc.
<SJA173> (GN) . . . . . 1 pc.

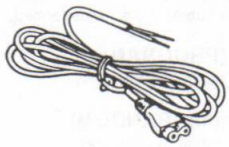

FM indoor antenna
<SSA270M> (E/EB/EG) . . 1 pc.
<SSA272M> (GC/GN) . . 1 pc.

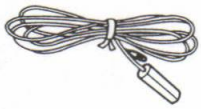

Remote control transmitter
<RAK-SC306W> 1 pc.

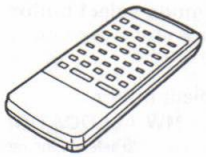

LW/MW loop antenna
<SPB1163-1M> . . . . . 1 pc.

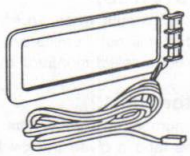

Antenna holder
<SMA223-1M> . . . . . 1 pc.

Mounting screws
<XTN3+10AFZ> . . . . . 2 pcs.

Remote control batteries
<UM-4, "AAA", R03> 2 pcs.

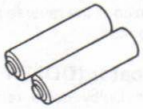

Attachment plug
(For United Kingdom only)
<SJP9009> (EB) . . . . . 1 pc.

■ LOCATION OF CONTROLS

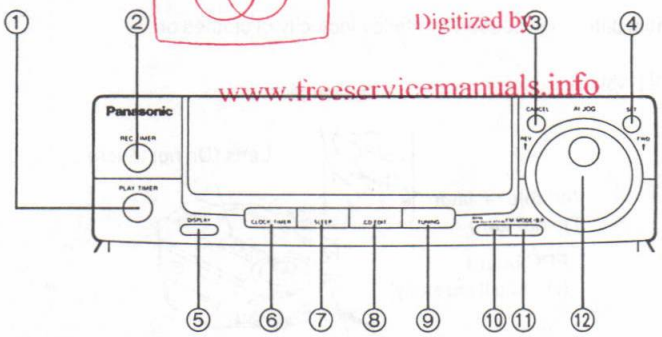

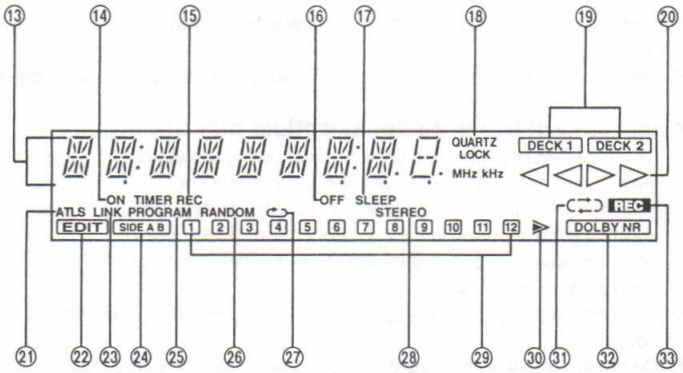

Tuner section

① **Timer play button (PLAY TIMER)**
This button is used for timer play.

② **Timer recording button (REC TIMER)**
This button is used for timer recording.

③ **Cancel button (CANCEL)**
This button is used to cancel the selected contents by using the jog dial.

④ **Setting button (SET)**

⑤ **Display select button (DISPLAY)**
This button is used to select the display (mode display, clock or tape counter, etc.).

⑥ **Clock/timer button (CLOCK/TIMER)**
This button is used to select the desired timer mode or to adjust the clock.

⑦ **Sleep timer button (SLEEP)**
This button is used when you wish to fall asleep while listening to the music.

⑧ **Compact disc edit-recording mode select button (CD EDIT)**
This button is used to select the desired edit-recording mode.

⑨ **Tuning mode select button (TUNING)**
This button is used to select the desired tuning mode(preset or manual).

⑩ **Band select button (-BAND, –MW ALLOCATION)**
This button is used to listen to the radio and select the desired radio band.

⑪ **FM mode/beat proof button (FM MODE/B.P)**
This button is used to select the FM listening mode(stereo or monaural) during the FM broadcast station is received or to reduce the unwanted beat noise during MW/LW broadcast is recorded.

⑫ **Jog dial (AI JOG)**
This dial is used to select the contents of the mode, etc.

Display section

⑬ **Multi-display**
This display shows the selected source, present time, tape counter and the contents of the timer setting, received frequencies, compact disc edit-recording mode, etc.

⑭ **Timer on time indicator (ON)**
This indicator illuminates to show the timer on time.

⑮ **Timer recording indicator (TIMER REC)**
This indicator illuminates when the timer recording button is pressed.

⑯ **Timer off time indicator (OFF)**
This indicator illuminates to show the timer off time.

⑰ **Sleep timer indicator (SLEEP)**
This indicator illuminates when the sleep timer button is pressed.

⑱ **Quartz lock indicator (QUARTZ LOCK)**
This indicator illuminates when the unit is precisely tuned to a broadcast station.

⑲ **Deck 1/2 indicator (DECK 1, DECK 2)**
This indicator illuminates to show the operational deck (deck 1 or deck 2.)

⑳ **Tape direction indicators (◁◁, ▷▷)**
These indicators illuminate to show the direction of tape travel.

㉑ **Automatic tape level setting indicator (ATLS)**
This indicator illuminates when the ATLS recording is performed.

㉒ **Compact disc edit-recording indicator (EDIT)**
This indicator illuminates when edit-recording from a compact disc is performed.

㉓ **Link indicator (LINK)**
This indicator illuminates when the unit is in a condition the disc link is possible.

㉔ **Tape side indicator (SIDE A, B)**
This indicator shows the tape side (A or B) to be recorded on when the edit-recording of compact disc is performed.

㉕ **Program indicator (PROGRAM)**
This indicator illuminates during program play.

㉖ **Random play indicator (RANDOM)**
This indicator illuminates during random play.

㉗ **Repeat play indicator (⟲)**
This indicator illuminates during repeat play.

㉘ **FM stereo indicator (STEREO)**
This indicator automatically illuminates when an FM stereo broadcast is being received. It will not illuminate if the FM mode/beat proof button is used to select monaural mode.

㉙ **Track number indicators (1–12)**
These indicators show the number of tracks. The number indicate on which side of the tape a given track will be recorded.

㉚ **Over indicator (▶)**
This indicator illuminates if the total number of tracks on the disc is 13 or more.

㉛ **Reverse mode indicators (⊂⊃)**
Each indicator illuminates to show which of the reverse modes was selected by the reverse mode button.

㉜ **Dolby noise reduction indicator (DOLBY NR)**
This indicator illuminates when the Dolby noise reduction system is activated.

㉝ **Recording indicator (REC)**
This indicator illuminates when the recording (recording standby) mode.

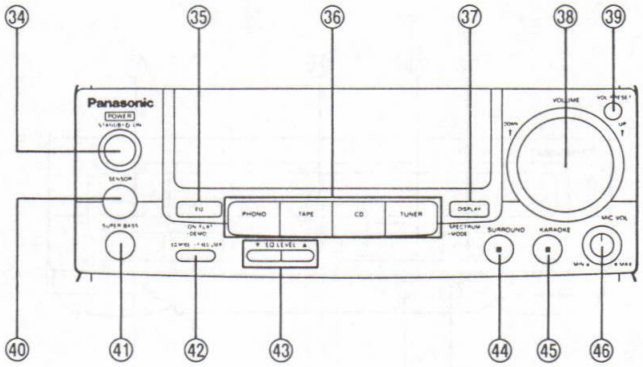

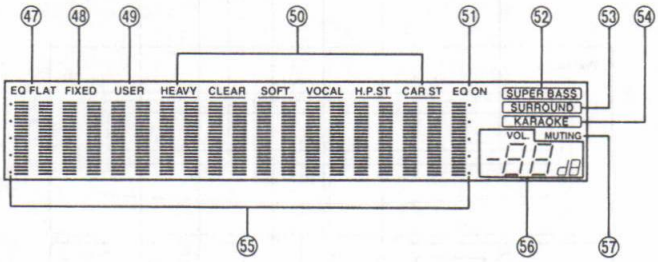

Amplifier section

㉞ Power "STANDBY ⏻/ON" switch (POWER STANDBY⏻/ON)
This switch switches ON and OFF the secondary circuit power only. The unit is in the "standby" condition when this switch is set to the STANDBY ⏻ position. Regardless of the switch setting, the primary circuit is always "live" as long as the power cord is connected to an electrical outlet.

㉟ Equalizer ON/FLAT button (EQ, -ON/FLAT, –DEMO)
This button is used to switch the equalizer on or flat. If you press and hold this button, sound effects will be sequentially changed (Demonstration function).

㊱ Input select buttons (PHONO, TAPE, CD, TUNER)
These buttons are used to select the sound source to be heard.

㊲ Display mode select button (DISPLAY, -SPECTRUM, –MODE)
This button is used to select one of five spectrum curves. If you press and hold this button, the display mode will change.

㊳ Volume level control (VOLUME)
This control is used to adjust the volume level. Note that -- dB is the lowest volume setting and 0 dB is the highest level setting.

㊴ Volume preset button (VOL. PRESET)
This button is used when making a volume presetting for timer play.

㊵ Remote control signal sensor (SENSOR)

㊶ Super bass button (SUPER BASS)
When this button is pressed, the dynamic low frequency ranges are boosted.

㊷ Equalizer mode select button (-EQ MODE, –FIXED/USER)
This is used to select the equalizer mode. If you press and hold this button, the equalizer mode (FIXED or USER) will be switched.

㊸ Equalizer level-control buttons (EQ LEVEL)
These buttons are used to adjust of the equalization level.

㊹ Surround button (SURROUND)
This button is used to activate the surround sound effect.

㊺ Karaoke button (KARAOKE)
This button is used to perform "karaoke" (making microphone mixing with an accompaniment).

㊻ Microphone volume control (MIC VOL.)
This control is used to adjust the microphone volume level.

Display section

㊼ Equalizer flat indicator (EQ FLAT)
This indicator illuminates when the equalizer function is turned off.

㊽ Fixed indicator (FIXED)
This indicator illuminates when the pre-programmed equalization curve is selected.

㊾ User indicator (USER)
This indicator illuminates when the "USER" mode equalization curve is selected.

㊿ Equalization mode indicators (HEAVY~CAR ST)
These indicators show which of the six equalization curves is currently used.

(51) Equalizer on indicator (EQ ON)
This indicator illuminates when the equalizer function is turned on.

(52) Super bass indicator (SUPER BASS)
This indicator illuminates when the super bass mode is activated.

(53) Surround indicator (SURROUND)
This indicator illuminates when the surround effect is activated.

(54) KARAOKE indicator (KARAOKE)
This indicator illuminates when KARAOKE mode is activated.

(55) Equalization/spectrum analysis level display
This display shows the equalization/spectrum analysis level.

(56) Volume level display
This display shows the volume level.

(57) Muting indicator (MUTING)
This indicator illuminates when the muting mode is activated.

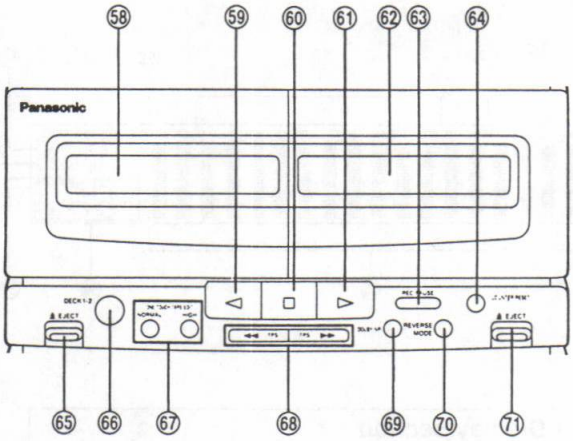

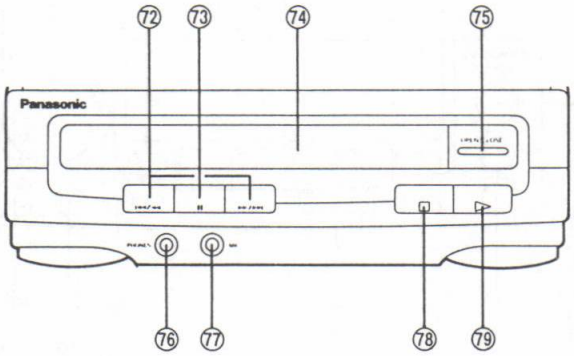

Cassette deck section

58 Deck 1 cassette holder

59 Reverse-side playback button (◁)
This button is used to start the playback or recording (deck 2) to the reverse direction.

60 Stop button (□)
This button is used to stop the tape.

61 Forward-side playback button (▷)
This button is used to start the playback or recording (deck 2) to the forward direction.

62 Deck 2 cassette holder

63 Record/record standby button (REC PAUSE)
This button is used to put deck 2 into the record standby mode.

64 Tape counter reset button (COUNTER RESET)
This button is used to reset the tape counter indicator to "000".

65 Deck 1 cassette eject button (▲ EJECT)
This button is used to open the cassette holder.

66 Deck 1/2 select button (DECK 1/2)
This button is used to select the deck to be operated.

67 One touch tape edit buttons (ONE TOUCH TAPE EDIT)
These buttons are used to start the tape-to-tape recording.

68 Fast-forward/rewind/tape program sensor buttons [◀◀ (TPS), (TPS) ▶▶]
These buttons are used to advance or rewind the tape, or to quickly search for the beginning of a tune while the tape is being played.

69 Dolby noise reduction button (DOLBY NR)
This button is used to reduce the hissing noise heard from the tape. This unit is provided with Dolby B-type noise reduction system.

70 Reverse mode select button (REVERSE MODE)
This button is used to select the reverse mode (for playback and recording).

71 Deck 2 cassette eject button (▲ EJECT)

Compact disc player section

72 Skip/search buttons (⏮/◀◀ , ▶▶/⏭)

73 Pause button (⏸)
This button is used to stop the disc play temporarily.

74 Disc cover

75 Disc tray open/close button (OPEN/CLOSE)

76 Headphones jack (PHONES)

77 Microphone jack (MIC)

78 Stop button (□)
This button is used to stop the disc play.

79 Play button (▷)
This button is used to start playing the disc.

■ DISASSEMBLY INSTRUCTIONS

"ATTENTION SERVICER"
Some chassis components may have sharp edges. Be careful when disassembling and servicing.

Ref. No. 1	Removal of the Cabinet
Procedure 1	

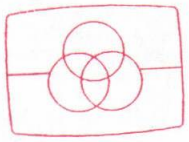

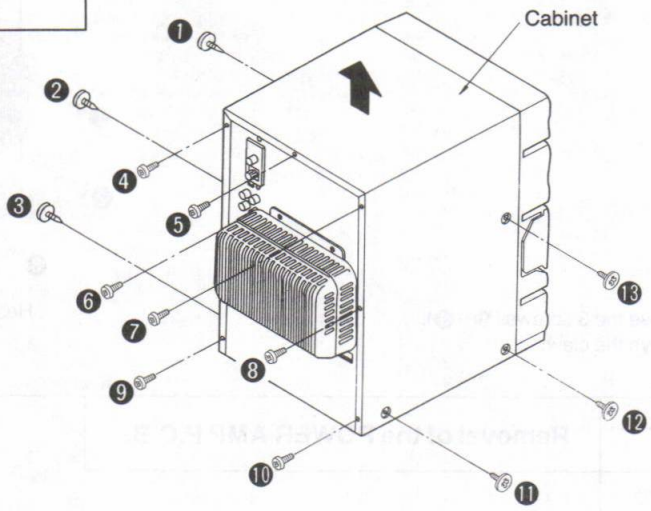

●Remove the 13 screws (❶~⓭).

Ref. No. 2	Removal of the Front Panel
Procedure 1→2	

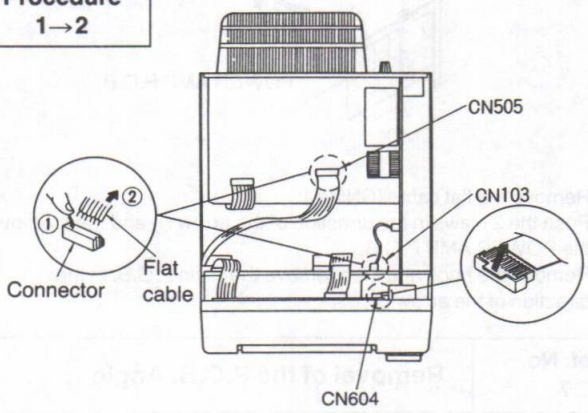

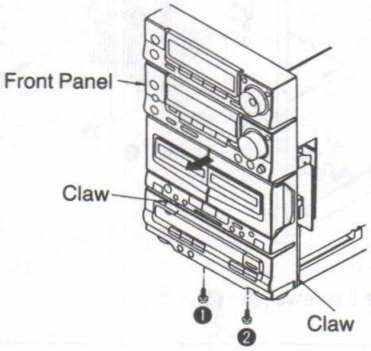

1. Remove the 2 flat cables (CN103, CN505).
2. Remove the connector (CN604).
3. Remove the 2 screws (❶, ❷).
4. Remove the 2 claws and then remove the Front Panel in the direction of arrow.

Ref. No. 3	Removal of the Main P.C.B.
Procedure 1→2→3	

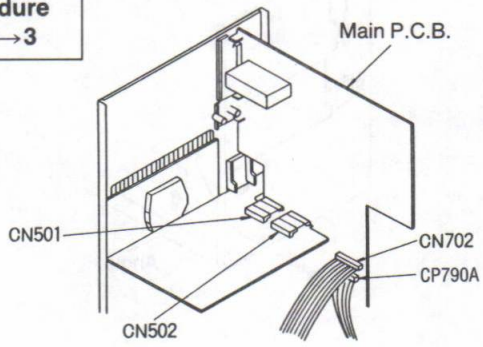

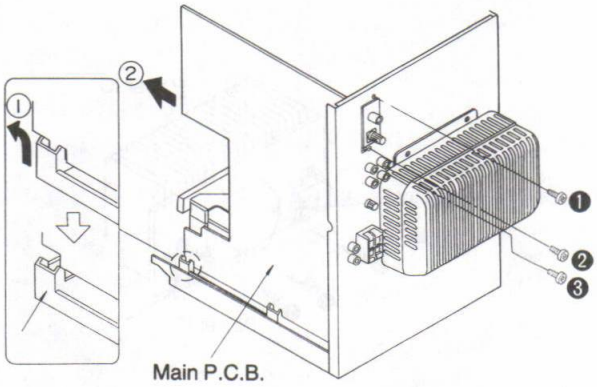

1. Remove the 3 connectors (CN501, CN502, CP790A).
2. Remove the flat cable (CN702).
3. Remove the 3 screws (❶~❸).
4. Remove the Main P.C.B. in the direction of arrow ①.
5. Remove the Main P.C.B. in the direction of arrow ②.

Ref. No. 4	Removal of the Heat Sink Cover
Procedure 1→4	

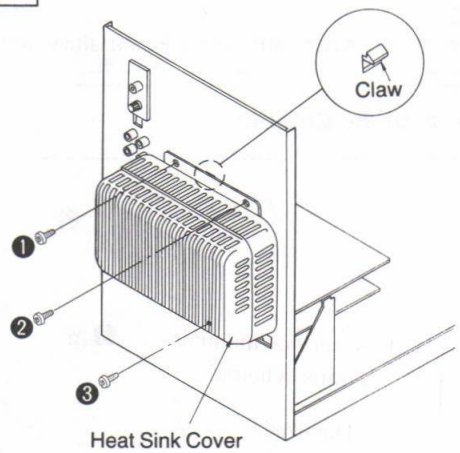

1. Remove the 3 screws (❶~❸).
2. Remove the claw.

Ref. No. 5	Removal of the POWER AMP P.C.B.
Procedure 1→5	

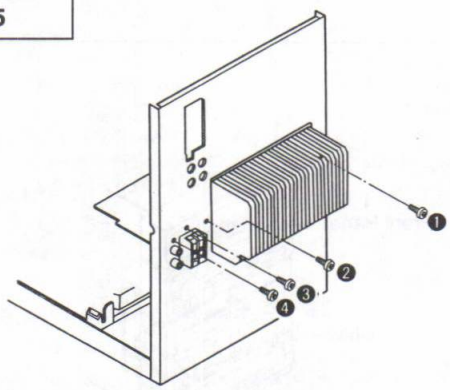

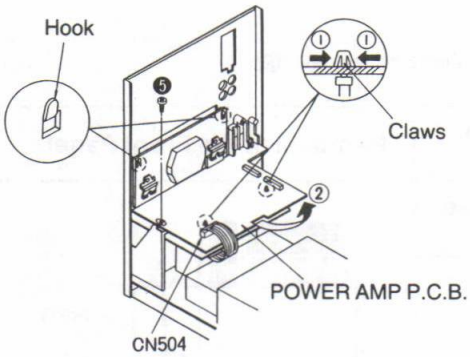

1. Remove the 5 screws (❶~❺).
2. Remove the flat cable (CN504).
3. Push the 2 claws in the direction of the arrow ① and then remove the POWER AMP P.C.B.
4. Remove the hook and then remove the Main P.C.B. in the direction of the arrow ②.

Ref. No. 6	Removal of the Power IC and Regulator Transistor
Procedure 1→6	

1. Unsolder the Power IC and Regulator Transistor.
2. Remove the 4 screws (❶~❹).

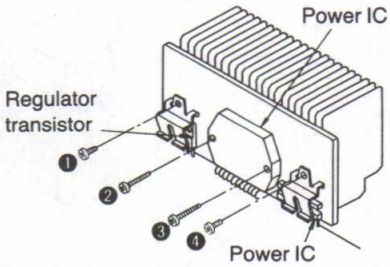

•When mounting the Power IC and regulator transistor, apply silicone compound (RFKX0002) to the rear side of Power IC and regulator transistor.

Ref. No. 7	Removal of the P.C.B. Angle
Procedure 1→2→3→4→5→7	

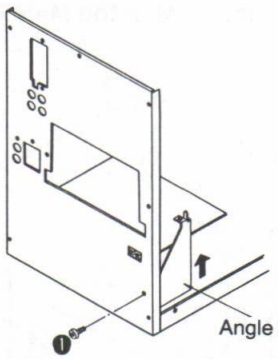

1. Remove the screw (❶).
2. Remove the P.C.B. angle in the direction of the arrow.

Ref. No. 8	Removal of the Power P.C.B.

Procedure
1→2→3→
4→5→8

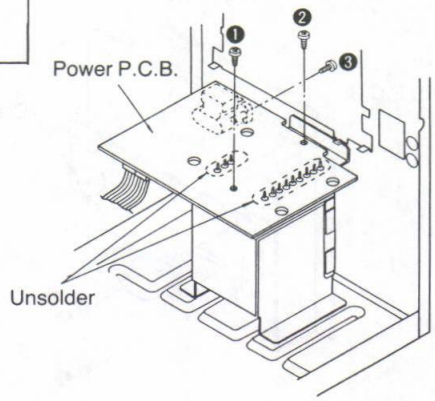

1. Remove the 3 screws (❶~❸).
2. Unsolder the transformer.

Ref. No. 9	Removal of the Rear Panel

Procedure
1→2→3→
4→5→7→9

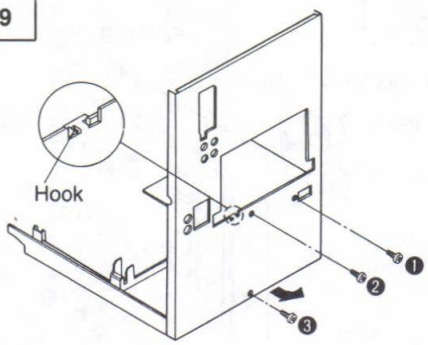

1. Remove the 3 screws (❶~❸).
2. Remove the hook of rear panel and then remove the rear panel in the direction of the arrow.

Ref. No. 10	Removal of the Power Transformer

Procedure
1→2→3→
4→5→7→
8→9→10

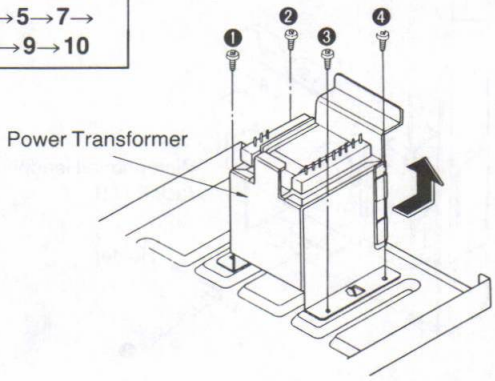

1. Remove the 4 screws (❶~❹).
2. Remove the Power Transformer in the direction of the arrow.

Ref. No. 11	Removal of the Mechanism Control P.C.B.

Procedure
1→2→11

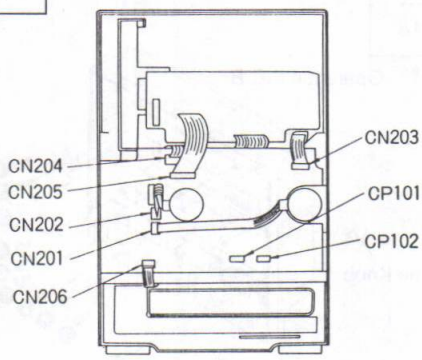

1. Remove the 2 connectors (CP101, CP102).
2. Remove the 6 flat cables (CN201, CN202, CN203, CN204, CN205, CN206).

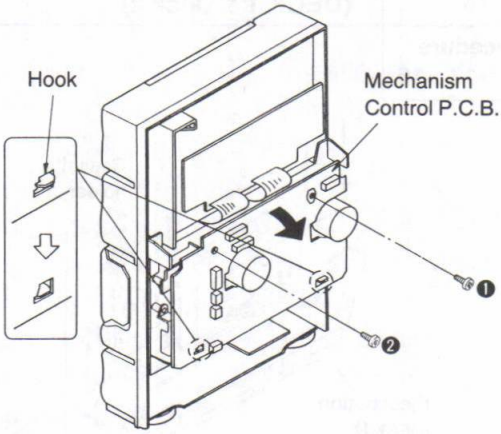

3. Remove the 2 screws (❶, ❷).
4. Remove the mechanism control P.C.B. in the direction of the arrow and then remove the 2 hooks.

Ref. No. 12	Removal of the Mechanism Unit

Procedure
1→2→11→12

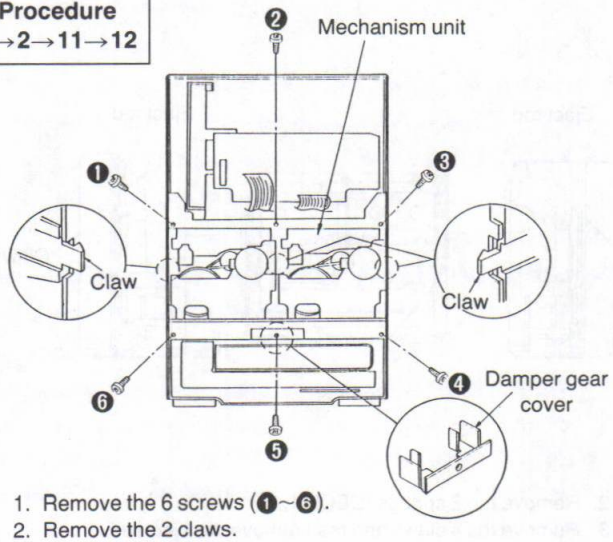

1. Remove the 6 screws (❶~❻).
2. Remove the 2 claws.

Ref. No. 13	Removal of the FL P.C.B. and CPU P.C.B.
Procedure 1→2→11→12→13	

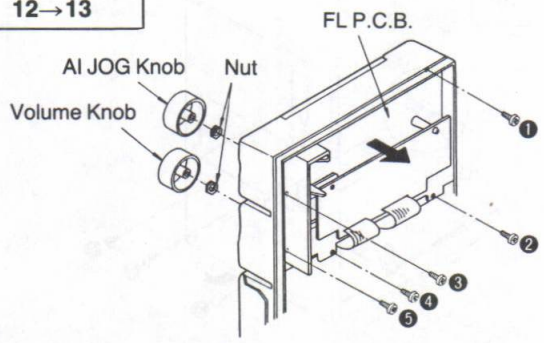

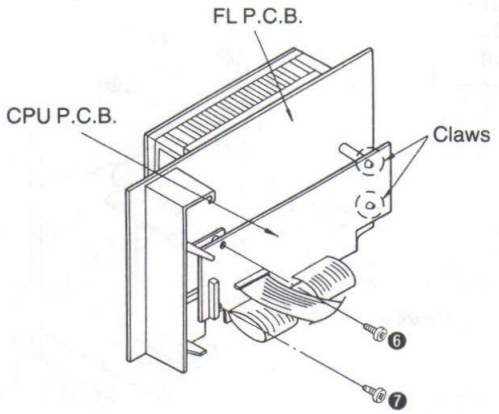

1. Pull out the 2 knobs (Volume and AI JOG Knob).
2. Remove the 2 nuts.
3. Remove the 5 screws (❶~❺).
4. Remove the FL P.C.B. in the direction of the arrow.
5. Remove the 2 screws (❻, ❼).
6. Remove the 2 claws and the Remove the CPU P.C.B.

Ref. No. 14	Removal of the Operation P.C.B.
Procedure 1→2→11→12→13→14	

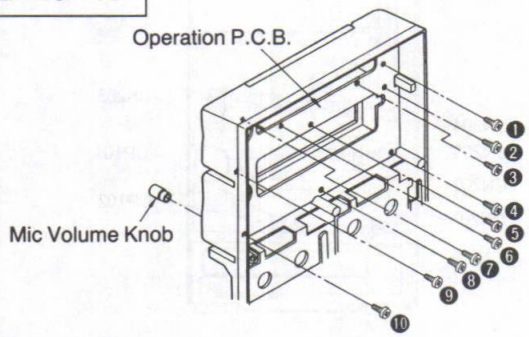

1. Pull out the Mic Volume Knob.
2. Remove the 10 screws (❶~❿).

Ref. No. 15	Removal of the Microphone/ Headphone Jack P.C.B.
Procedure 1→12→15	

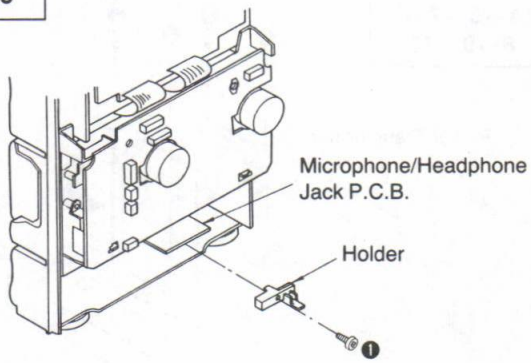

1. Remove the screw (❶).
2. Remove the holder and then pull out the Microphone/Headphone P.C.B.

Ref. No. 16	Removal of the Eject rod (DECK 1 & Deck 2)
Procedure 1→2→12→16	

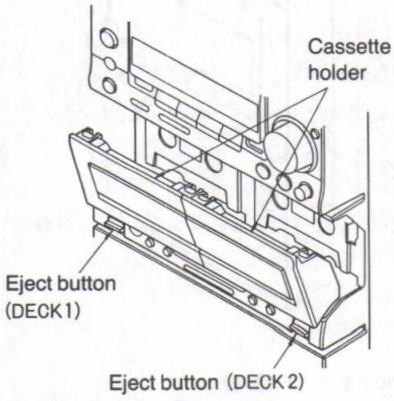

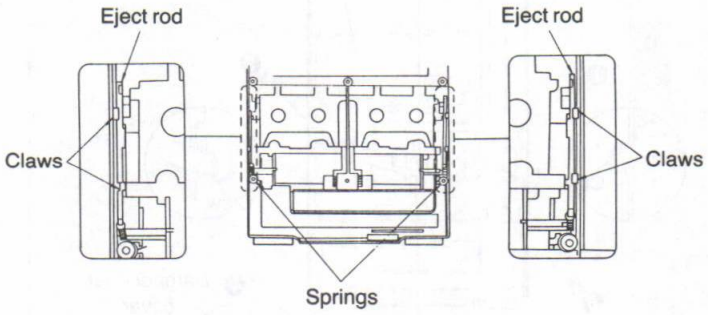

1. Press the eject buttons (DECK 1, 2).
2. Remove the 2 springs (DECK 1, 2).
3. Remove the 4 claws and then remove the eject rod.

Ref. No. 17	Removal of the Eject lever (DECK 1 & DECK 2)
Procedure 1→2→11→12→16→17	

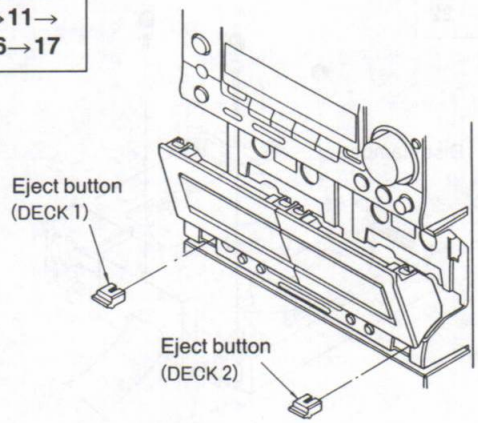

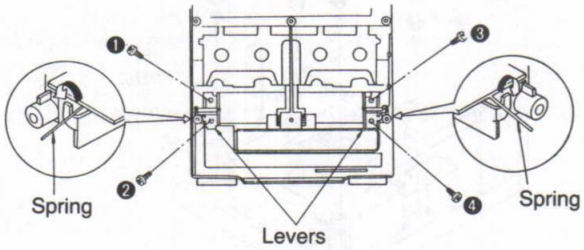

1. Pull out the eject buttons (DECK 1, 2).
2. Remove the 2 springs in the direction of the arrow.
3. Remove the 4 screws (❶~❹).

Ref. No. 18	Removal of the Cassette Holder (DECK 1 & DECK 2)
Procedure 1→2→11→12→16→17→18	

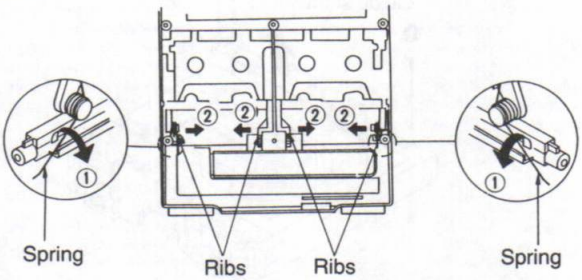

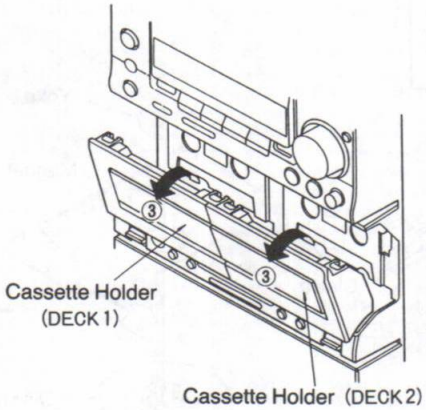

1. Remove the 2 springs in the direction of the arrow ①.
2. Push the ribs in the direction of the arrow ②.
3. Remove the cassette holder in the direction of the arrow ③.

Ref. No. 19	Removal of the Damper Gear
Procedure 1→2→11→12→16→17→18→19	

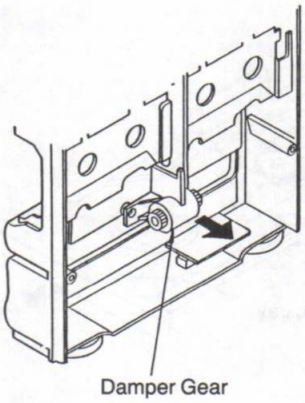

•Pull out the damper gear in the direction of the arrow.

Ref. No. 20	Removal of the Operation (Cassette Deck and CD) P.C.B.
Procedure 1→2→11→12→16→17→18→19→20	

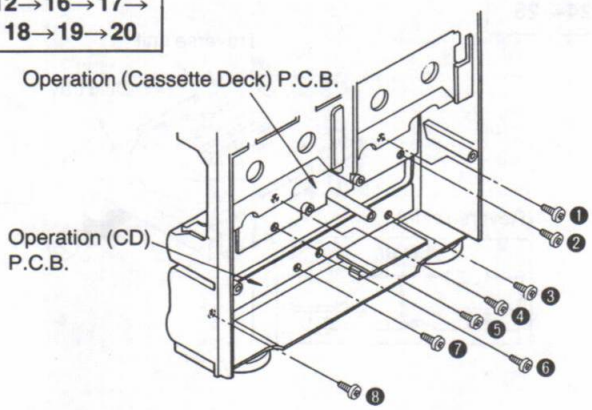

•Remove the 8 screws (❶~❽).

Ref. No. 21	Removal of the Loading Unit
Procedure 1→2→21	

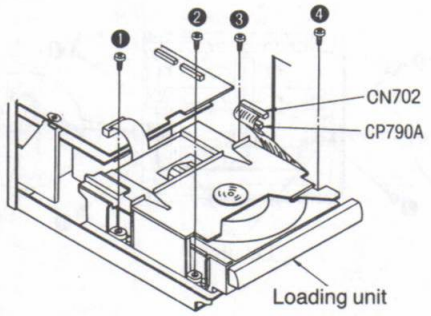

1. Remove the flat cable (CN702).
2. Remove the connector (CP790A).
3. Remove the 4 screws (❶~❹).

Ref. No. 22	Removal of the Disc Clamper
Procedure 1→2→21→22	

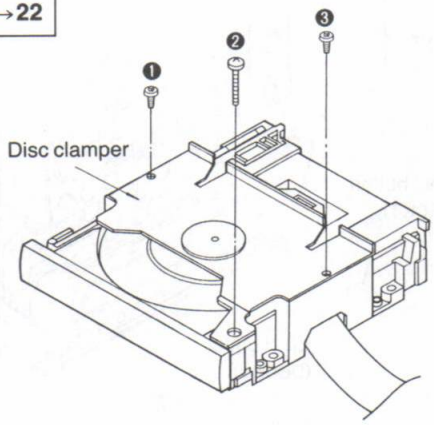

●Remove the 3 screws (❶~❸).

Ref. No. 23	Removal of the Magnet and Holder
Procedure 1→2→21→22→23	

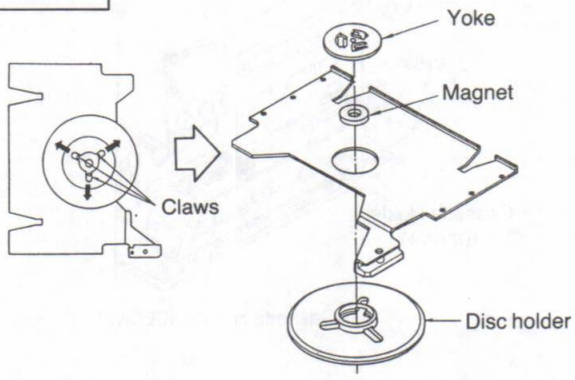

●Remove the 3 claws.

Ref. No. 24	Removal of the Guide Shaft and Guide Shaft Holder
Procedure 1→2→21→22→23	

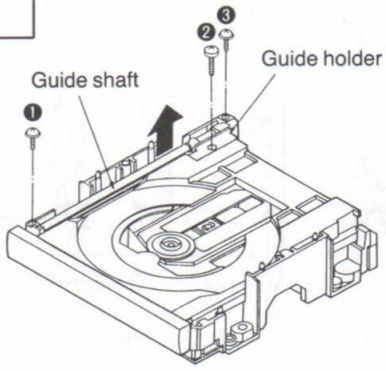

1. Remove the 3 screws (❶~❸).
2. Remove the guide shaft and guide shaft holder in the direction of the arrow.

Ref. No. 25	Removal of the Disc Tray
Procedure 1→2→21→22→24→25	

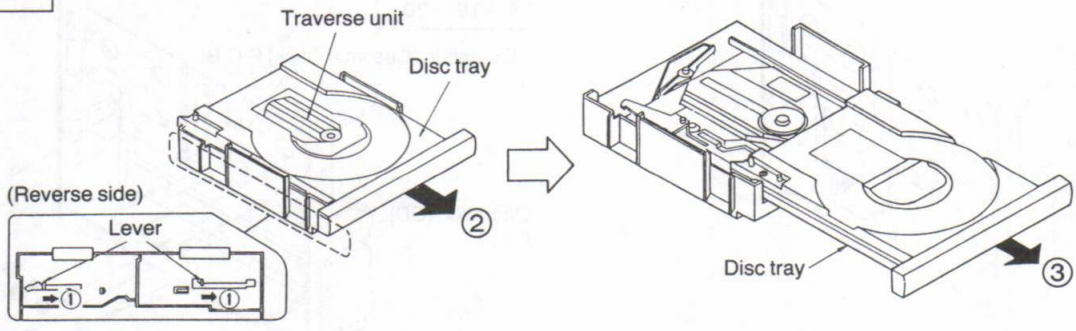

1. Move the lever in the direction of arrow ① until the traverse unit goes down and the disc tray slightly in the direction of the ②.
2. Remove the disc tray in the direction of the arrow ③.

Ref. No. 26	Removal of the Loading P.C.B. and Loading Motor
Procedure 1→2→21→22→24→25→26	

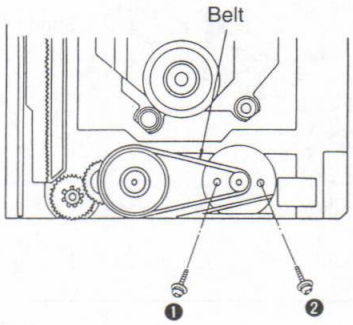

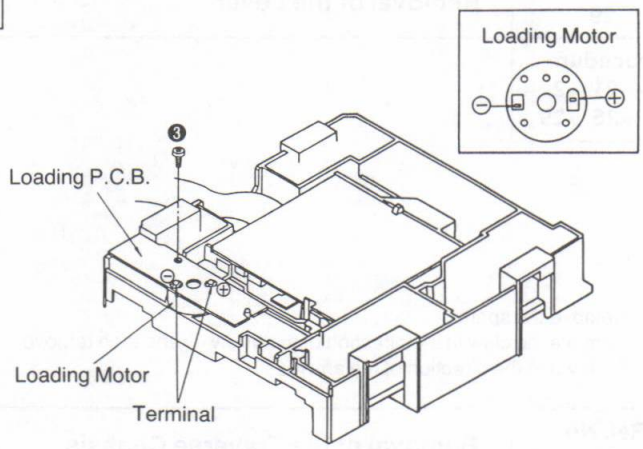

1. Remove the belt.
2. Remove the 2 screws (❶~❷).
3. Remove the screw (❸).
4. Unsolder the 2 terminals of loading motor.

Ref. No. 27	Removal of the Servo P.C.B.
Procedure 1→2→21→27	

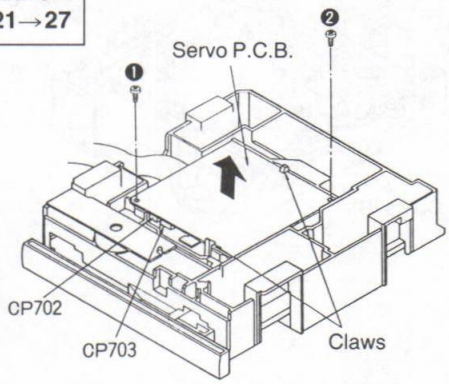

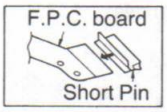

Note:
Insert a short pin into the traverse deck's F.P.C. board.

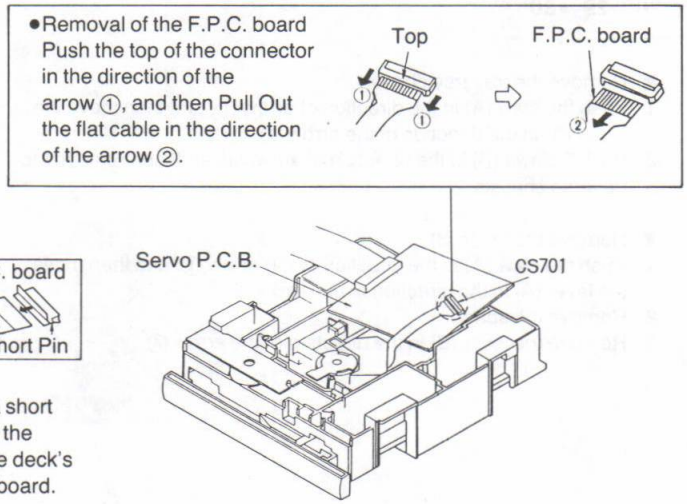

1. Remove the 2 screws (❶, ❷).
2. Remove the 2 claws.
3. Remove the servo P.C.B. in the direction of the arrow.
4. Remove the 2 connectors (CP702, CP703).
5. Remove the F.P.C. Board (CS701).

Ref. No. 28	Removal of the Traverse Unit
Procedure 1→2→21→22→24→25→27→28	

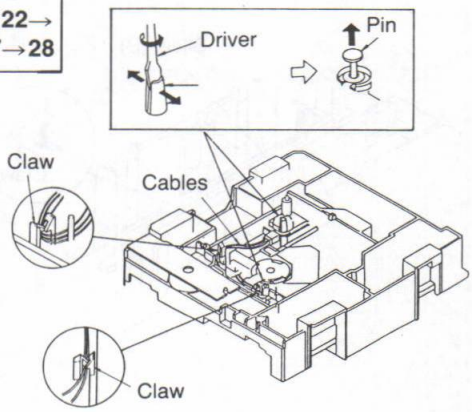

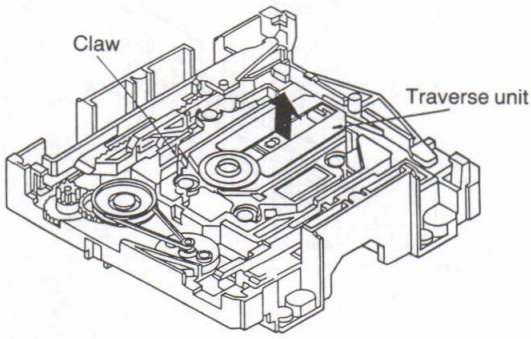

1. Release the cables from the code clampers.
2. Remove the 2 pin in the direction of the arrow.
3. Remove the claw and remove the traverse unit in the direction of the arrow.

Ref. No. 29	Removal of the Lever
Procedure 1→2→21→22→24→25→29	

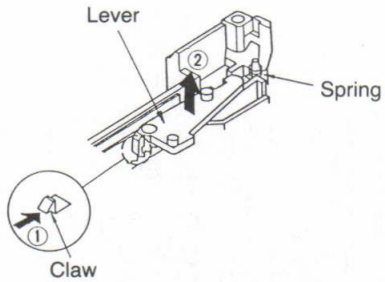

1. Remove the spring.
2. Remove the claw in the direction of the arrow ① and then remove the lever in the direction of the arrow ②.

Ref. No. 30	Removal of the Traverse Chassis
Procedure 1→2→21→22→24→25→27→28→29→30	

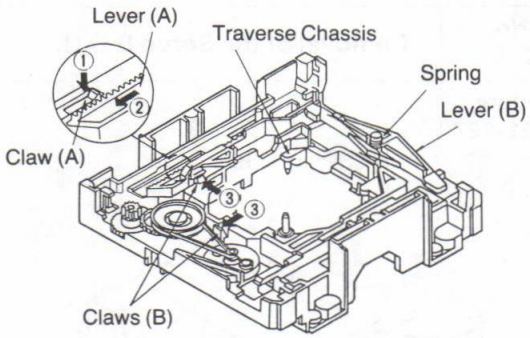

■ Remove the traverse chassis.
1. Push the claw (A) in the direction of arrow ①, and then move the slider (A) in the direction of the arrow ②.
2. Push 2 claws (B) in the direction of arrow ③, and then remove the traverse chassis.

■ Remove the lever (B)
1. Push the claw (A) in the direction of the arrow ①, and then move the lever (A) in the direction of the arrow ②.
2. Remove the spring.
3. Remove the lever (B) in the direction of the arrow ④.

Ref. No. 31	Removal of the Slider (A) and Slider (B)
Procedure 1→2→21→22→24→25→27→28→29→30→31	

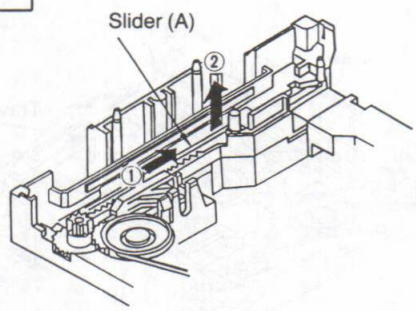

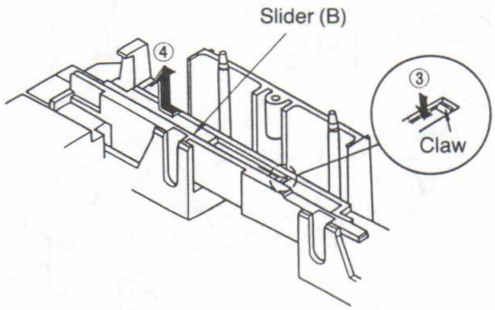

■ Removal of the Slider (A)
- Move the slider (A) in the direction of the arrow ①, and remove the slider (A) in the direction of the arrow ②.

■ Removal of the slider (B)
- Push the claw in the direction of the arrow ③, and remove the slider (B) in the direction of the arrow ④.

Ref. No. 32	Check of the F.L P.C.B. and CPU P.C.B.
Procedure 1→11	

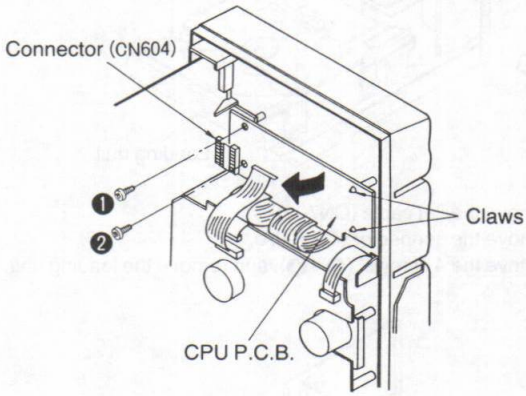

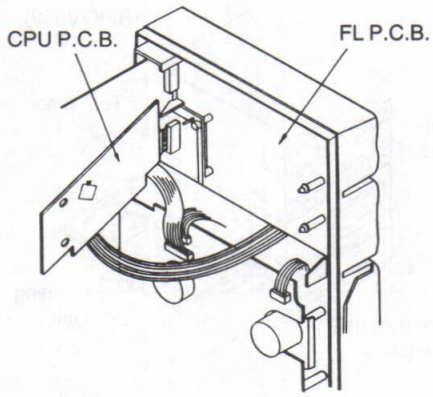

1. Remove the 2 screws (❶, ❷).
2. Remove the 2 claws.
3. Move the CPU P.C.B. in the direction of the arrow.

4. When checking the soldered surface of the P.C.B. (FL and CPU) and replacing the parts, do as shown in the Figure above.

Ref. No. 33	Check of the Mechanism Control P.C.B.
Procedure 1→2→33	

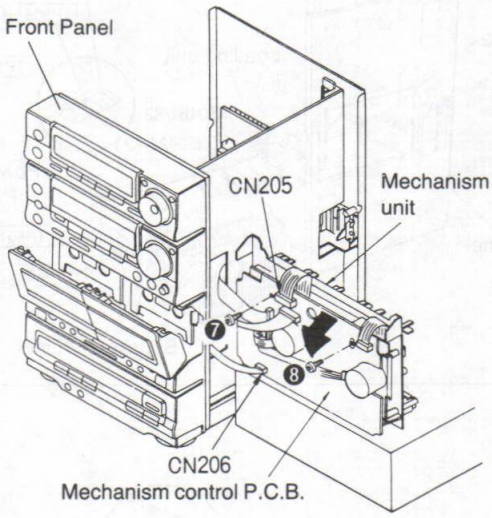

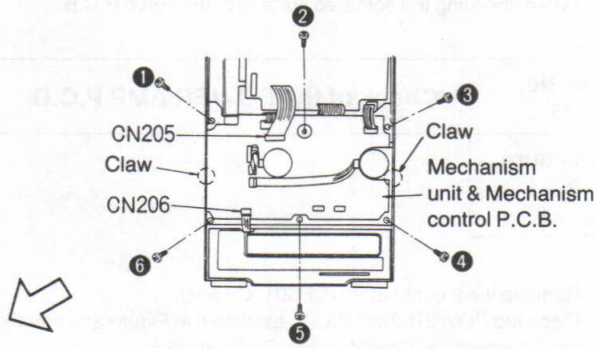

1. Remove the 6 screws (❶~❻).
2. Remove the 2 flat cable (CN205, CN206).
3. Remove the 2 claws and remove the mechanism unit and mechanism control P.C.B.

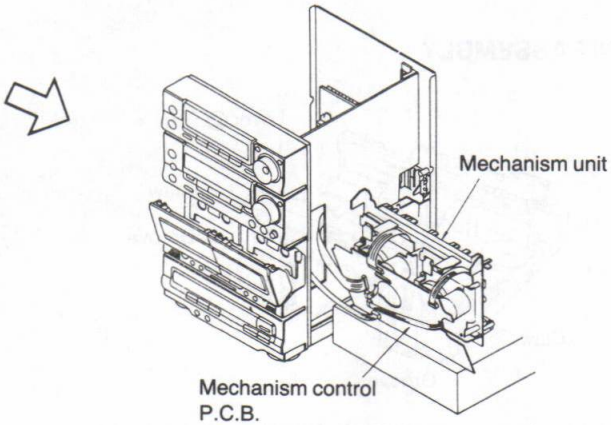

4. Reinstall the front panel to the body and connect the flat cable (CN205, CN505) and connector (CN206, CN604).
5. Place the mechanism unit sideways as shown in Figure.
6. When checking the component side of the mechanism control P.C.B. and replacing the parts, do as shown in the Figure above.
7. Remove the screw (❼), and then move the mechanism control P.C.B. in the direction of the arrow ❽.

8. When checking the soldered surface of the mechanism control P.C.B., do as shown in the Figure above.

Ref. No. 34	Check of the Servo P.C.B.
Procedure 1→2→34	

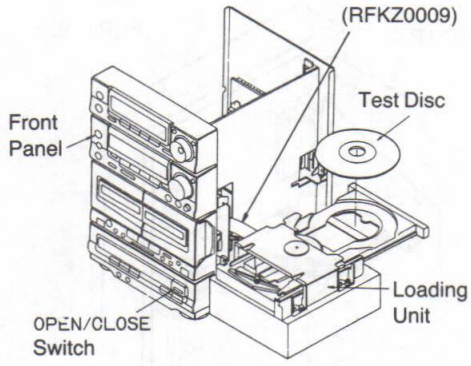

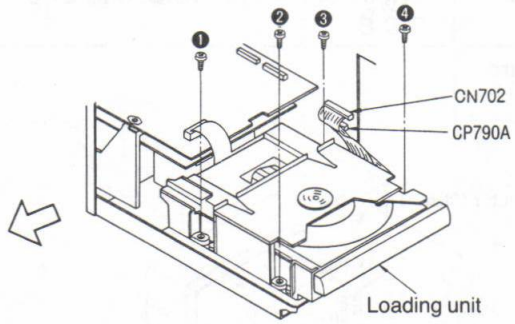

1. Remove the flat cable (CN702).
2. Remove the connector (CP790A).
3. Remove the 4 screws' (❶~❹), and remove the loading unit.

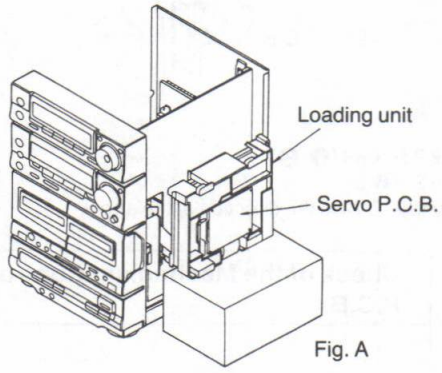

Fig. A

4. Reinstall the front panel to the body and connect the flat cable (CN505, CN702) and connector (CP790A).
5. Place the loading unit sideways as shown in Figure.
6. Set the test disc.
7. Detach the loading unit as shown in Fig. A.
8. When checking the soldered surface of the servo P.C.B.

Ref. No. 35	Check of the POWER AMP P.C.B.
Procedure 1→2→4→5→35	

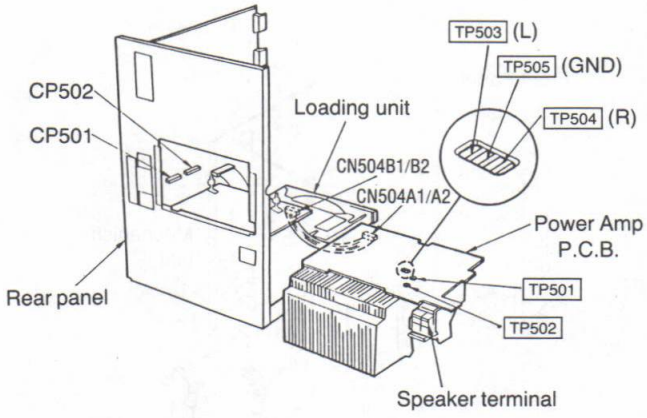

1. Remove the 2 connectors (CP501, CP502).
2. Place the POWER AMP P.C.B. as shown in Figure and connect the 2 connectors (CN504B1/B2, CN504A1/A2).
3. Connect jumper wire between TP501 and TP502.
4. Apply a AF signal to TP503 (Lch) or TP504 (Rch) and TP505 (GND) by using a AF OSC.
5. When checking the soldered surface of the POWER AMP P.C.B. do as shown in the Figure.

■ CD UNIT ASSEMBLY

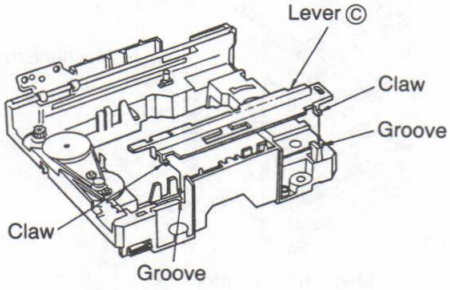

1. Install Lever © on the chassis by fitting the claws of Lever © in the two grooves of the chassis.

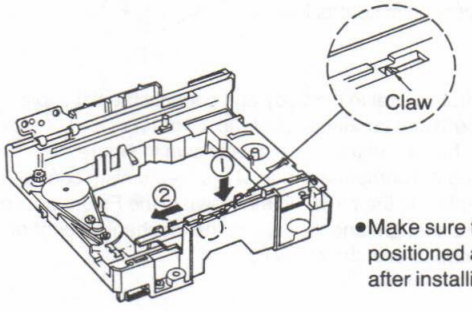

●Make sure that the claw is positioned as shown above after installing Lever ©.

2. Slide Lever © in the direction of arrow ② while keeping it held down lightly in the direction of arrow ①.

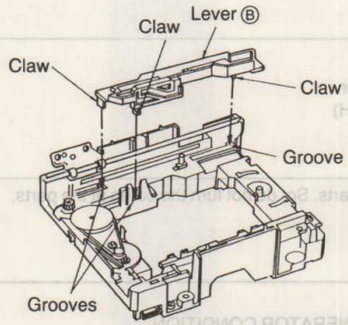

3. Install Lever Ⓑ on the chassis by fitting the claws of Lever Ⓑ in the three grooves of the chassis as shown above.

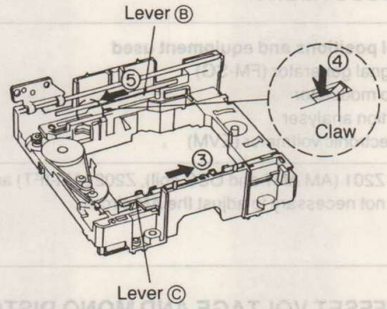

4. Slide Lever Ⓒ fully in the direction of arrow ③.
5. Keep holding down the claw in the direction of arrow ④ and slide Lever Ⓑ in the direction of arrow ⑤ to stop. (Slide but very little.)

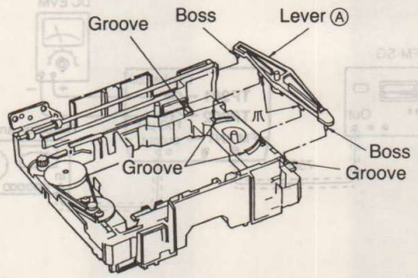

6. Install Lever Ⓐ on the chassis by fitting the two claws of Lever Ⓐ in the two grooves of the chassis and the two bosses in the two grooves as shown above.

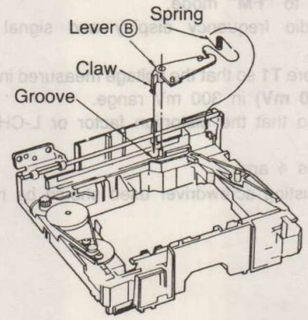

7. Install Lever Ⓑ on the chassis by fitting the claw of Lever Ⓑ in the groove of the chassis.
8. Install the spring on Lever Ⓑ and the chassis.

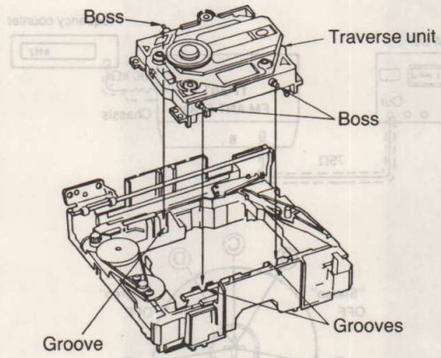

9. Install the traverse unit on the chassis by fitting the three bosses of the traverse unit in the three grooves of the chassis.

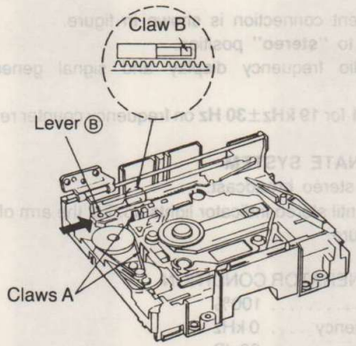

10. Make sure that the traverse unit is engaged with the two claws Ⓐ.
11. Slide Lever Ⓑ in the direction of the arrow. Be sure to check if claw Ⓑ is set as shown above. (Slide Lever Ⓑ but very little.)

■ INSTALLING DISC TRAY UNIT

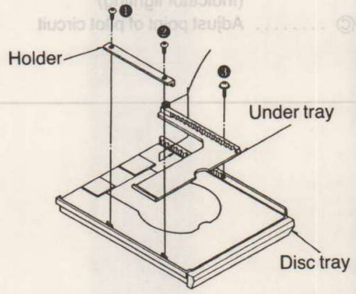

1. Install the under tray on the disc tray.
2. Install the holder on the disc tray with the two screws ❶ and ❷.
3. Screw the under tray on the disc tray ❸.
   Make sure that the under tray moves smoothly after installing the disc tray unit.

■ INSTALLING DISC TRAY

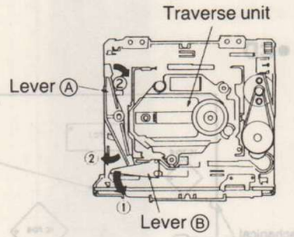

1. Move Lever Ⓑ in the direction of arrow ① and Lever Ⓐ in the direction of arrow ②. (The traverse unit rises.)

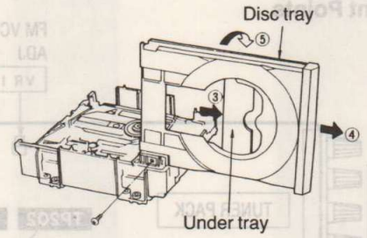

2. Screw the disc tray on the slider as shown above.
3. Slide the under tray fully in the direction of arrow ③.
4. Slide the disc tray fully in the direction of arrow ④.
5. Lay the disc tray down in the direction of arrow ⑤.

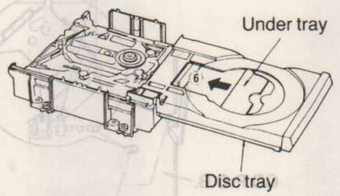

6. Slide the under tray in the direction of arrow ⑥.
7. Hold the disc tray and slide the under tray fully in the direction of arrow ⑥. (Slide but very little and the loading gear is engaged with disc tray gear.)

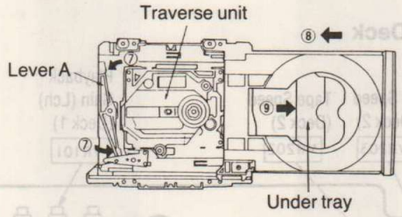

8. Move Lever A in the direction of arrow ⑦. (The traverse unit is lowered.)
9. Slide the disc tray in the direction of arrow ⑧. (Make sure that the under tray is moved in the direction of arrow ⑨.)

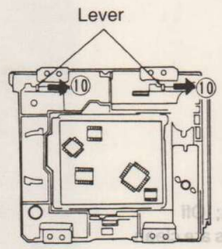

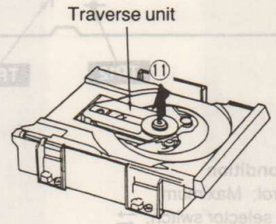

10. Slide the lever in the direction of arrow ⑩ and check if the traverse unit rises in the direction of arrow ⑪.

■ MEASUREMENTS AND ADJUSTMENTS

■ Adjustment Points

•Tuner

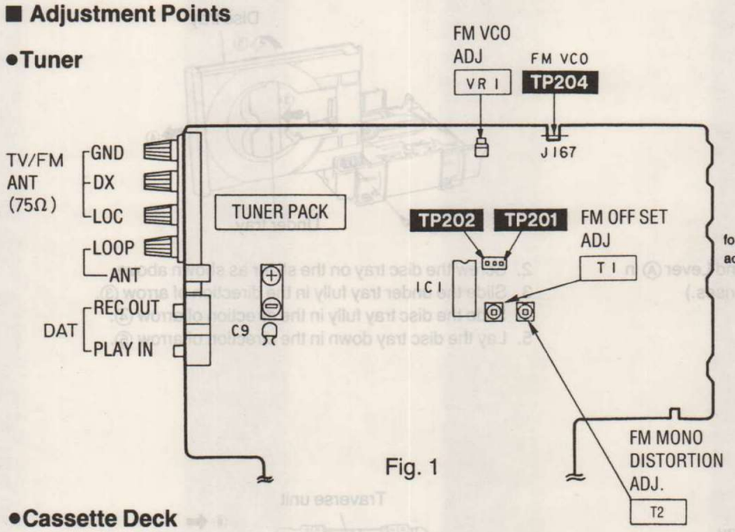

Fig. 1

•CD

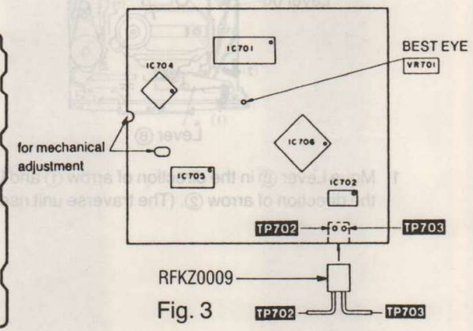

Fig. 3

•Cassette Deck

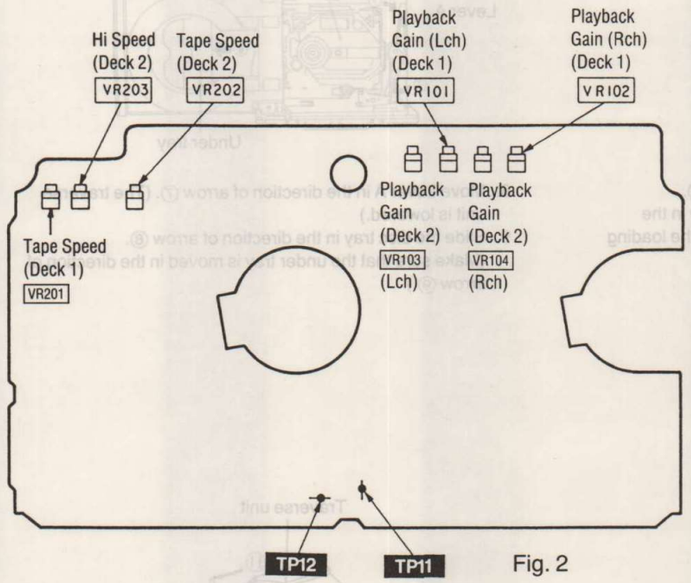

Fig. 2

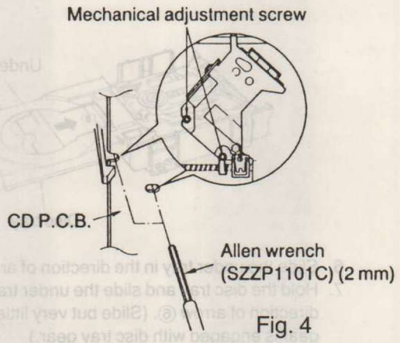

Fig. 4

•Measurement Condition

- •Rec. level control; Maximum
- •Reverse-mode selector switch; ⇄
- •Edit-recording tape-speed selector; NORMAL
- •Timer-recording switch; off
- •Dolby NR switch; Off
- •Make sure heads are clean
- •Make sure capstan and pressure roller are clean
- •Judgeable room temperature 20±5°C (68±9°F)

•Measuring instrument

- •EVM (Electronic Voltmeter)
- •Oscilloscope
- •Digital frequency counter
- •AF oscillator
- •ATT (Attenuator)
- •DC voltmeter
- •Resistor (600Ω)

•Test tape

- •Head azimuth adjustment (8 kHz, −20 dB); QZZCFM
- •Tape speed adjustment (3 kHz, −10 dB); QZZCWAT
- •Playback frequency response (315 Hz, 12.5 kHz, 10 kHz, 8 kHz, 4 kHz, 1 kHz, 250 Hz, 125 Hz, 63 Hz, −20 dB); QZZCFM
- •Playback gain adjustment (315 Hz, 0 dB); QZZCFM
- •Overall frequency response, Overall gain adjustment Normal reference blank tape; QZZCRA
  CrO_2 reference blank tape; QZZCRX
  Metal reference blank tape; QZZCRZ

■ FM ADJUSTMENT

Control positions and equipment used

- •FM signal generator (FM-SG)
- •Stereo modulator
- •Distortion analyser
- •DC electronic voltmeter (EVM)
- •Frequency counter
- •Choke coil (100 μH)
- •Resistor (100 kΩ)

Note: For Z201 (AM ANT and OSC coil), Z202 (AM-IFT) and Z251 they are supplied as adjusted parts. So, do not turn the cores of the parts. If is not necessary to adjust the AM circuit.

FM OFFSET VOLTAGE AND MONO DISTORTION ADJUSTMENT

1. Test equipment connection is shown in figure.
2. Set the unit to **"FM"** mode.
3. Set the radio frequency display and signal generator to **100.10 MHz**.
4. Adjust the core **T1** so that the voltage measured in signal mode is **0 mV (0±20 mV)** in 300 mV range.
5. Adjust T2 so that the distortion factor or L-CH and R-CH is minimized.
6. Repeat steps 4 and 5.

Note: The adjusting screwdriver used should be made of resin.

FM SIGNAL GENERATOR CONDITION
Modulation 100%
Modulation frequency ..... 1 kHz
Output level ..... 66 dB

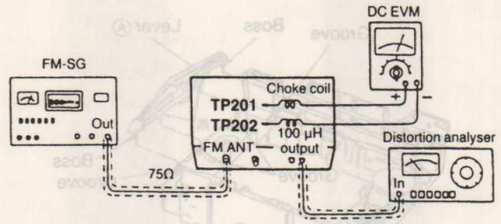

FM MPX VCO ADJUSTMENT

1. Test equipment connection is shown in figure.
2. Set the unit to **"stereo"** position.
3. Set the radio frequency display and signal generator to **100.10 MHz**.
4. Adjust **VR301** for **19 kHz±30 Hz** on frequency counter reading.

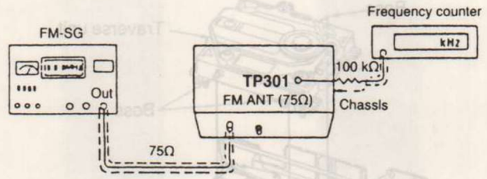

USING ALTERNATE SYSTEM

1. Receive the stereo broadcast.
2. Adjust **VR1** until stereo indicator lights up. Fix the arm of **VR1** as shown in figure.

FM SIGNAL GENERATOR CONDITION
Modulation 100%
Modulation frequency .... 0 kHz
Output level ..... 66 dB

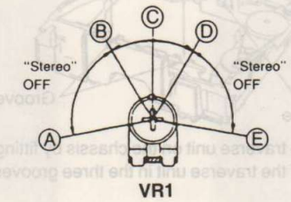

Ⓐ–Ⓑ,
Ⓓ–Ⓔ .... "Stereo" OFF position
Ⓑ–Ⓓ .... "Stereo" ON position (Indicator lighting)
Ⓒ ..... Adjust point of pilot circuit

■ TAPE ADJUSTMENT

ERASE CURRENT ADJUSTMENT (DECK 2)

1. Insert the Metal blank test tape (QZZCRZ) and set the unit to the Record Pause mode.
2. Adjust **VR301** so that the output between **TP301** and **TP302** (GND) (the output on both edges of R302) is within the standard value.

Standard value: 190 mA±5 mA (Metal)

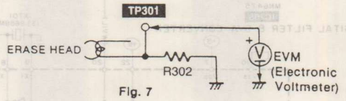

Fig. 7

OVERALL FREQUENCY RESPONSE (DECK 2)

1. Insert the Normal blank test tape (QZZCRA) and set the unit to the Record Pause mode.
2. Apply a reference input signal (1kHz, −24dB) through an attenuator.
3. Attenuate the signal by 20dB and adjust the frequency from 50Hz~10kHz.
4. Record the frequency sweep.
5. Playback the recorded signal and assure that it is within the range shown in **Fig. 8** in comparison to the reference frequency (1kHz).
6. If it is not within the standard range, adjust **VR302** (L-CH) and **VR303** (R-CH) so that the frequency level is within the standard range.
   - Level up in high frequency range ..... Increase the bias current.
   - Level down in high frequency range .. Decrease the bias current.
7. Repeat steps 2~6 above using the CrO_2 tape (QZZCRX) and the Metal tape (QZZCRZ) increasing the frequency range to 12.5kHz (50Hz~12.5kHz).
8. Assure that the level is within the range shown in **Fig. 9**.

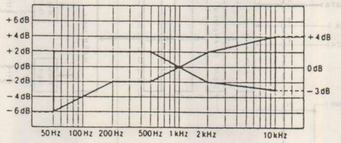

Fig. 8

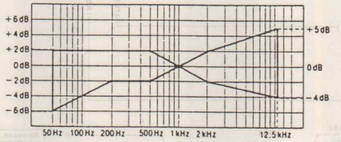

Fig. 9

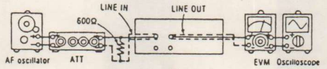

Fig. 10

LINE IN (Lch): **TP1** (Rch): **TP2**
LINE OUT (Lch): **TP5** (Rch): **TP6**

OVERALL GAIN ADJUSTMENT (DECK 2)

1. Insert the Normal blank test tape (QZZCRA) and set the unit to the Record pause mode.
2. Apply a reference input signal (1kHz, −19dB). Attenuate the output so that its level becomes 0.4V.
3. Record this input signal.
4. Playback the signal recorded in step 3 above, and assure that the output is within the standard value.

Standard value: 0.4V±0.5dB

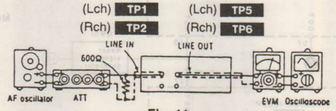

Fig. 11

HEAD AZIMUTH ADJUSTMENT (DECK 1/2)

1. Playback the azimuth adjustment portion (8kHz, −20dB) of the test tape (QZZCFM). Vary the azimuth adjusting screw until the outputs of the L-CH and R-CH are maximized and the lissajous waveform, as illustrated, approaches 0 degrees.

   Note: If L-CH and R-CH are not maximized at the same point, adjust to the point where the levels of each channel are maximized and equal.
2. Perform the same adjustment in the play mode.
3. After the adjustment, apply screwlock to the azimuth adjusting screw.

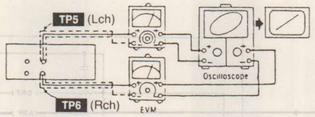

Fig. 1

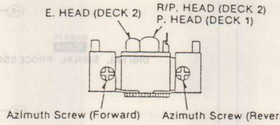

Fig. 2

TAPE SPEED ADJUSTMENT (DECK 1/2)

Normal speed

1. Shift the edit-recording tape-speed selector to "**NORMAL**".
2. Playback the middle portion of the test tape (QZZCWAT).
3. Adjust Deck 1=**VR201** and Deck 2=**VR202** so that the output is within the standard value.

Standard value: 3000±15Hz (NORMAL speed)

High speed [Set the unit to forward (FWD) mode.]

4. Push the edit speed button (SPEED). This will set the high speed mode.
5. Playback the middle portion on the test tape (QZZCWAT).
6. At that time, check if the output from DECK 1 is within the standard value.

Standard value: 5,000±600 Hz (HIGH speed)

7. Adjust **VR203** so that the output frequency of DECK 2 is within ±30 Hz of the value of the output frequency of DECK 1.

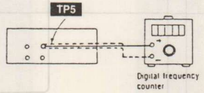

Fig. 3

PLAYBACK GAIN ADJUSTMENT (DECK 1/2)

1. Playback the gain adjusted portion (315Hz, 0dB) of the test tape (QZZCFM).
2. Adjust Deck 2=**VR103** (L-CH) [[**VR104** (R-CH)]] and Deck 1=**VR101** (L-CH) [[**VR102** (R-CH)]] so that the output is within the standard value.

Standard value: 400 mV±0.5 dB

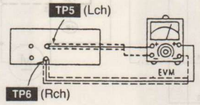

Fig. 4

PLAYBACK FREQUENCY RESPONSE (DECK 1/2)

1. Playback the frequency response portion (315Hz, 12.5kHz~63Hz, −20dB) of the test tape (QZZCFM).
2. Assure that the frequency response is within the range shown in **Fig. 6** for both L-CH and R-CH.

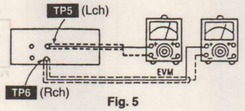

Fig. 5

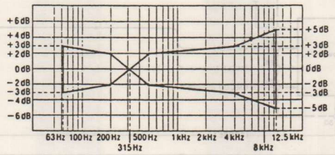

Fig. 6

■ CD ADJUSTMENT

Caution:

- It is very dangerous to look at or touch the laser beam. (Laser radiation is invisible.) With the unit turned "on", laser radiation is emitted from the pickup lens. Avoid exposure to the laser beam, especially when performing adjustments.

Measuring Instruments and Special Tools

- Test disc
  1. Playability test disc (SZZP1054C)
  2. Uneven test disc (SZZP1056C)
- Allen wrench (M2.0) (SZZP1101C)
- Oscilloscope

(1) MECHANICAL ADJUSTMENT

- When the traverse deck is replaced, making adjustments is not necessary. (The traverse deck ass'y is already adjusted.)
- Make adjustments to improve playability when the traverse deck has not been replaced. Make the electrical adjustments first.

1. Connect the oscilloscope's CH. 1 probe across **TP702** (+) and **TP703** (V-REF) on the Servo P.C.B.
   Oscilloscope setting:
   VOLT ..... 200 mV
   SWEEP ..... 0.5 μsec
   Input coupling ..... AC
2. Switch the player power **ON**, and play track **19** on the test disc (SZZP1056C).
3. Leave the player in Play mode and place it as shown in the figure on the right.
4. Alternately adjust the two mechanical adjusting screws with the 2.0 mm allen wrench (SZZP1101C) until the RF signal amplitude variation on the oscilloscope is minimized. (Shown in Fig. 2)
5. After completing the adjustment, lock the **mechanical adjustments** with lock paint (RZZOL01).

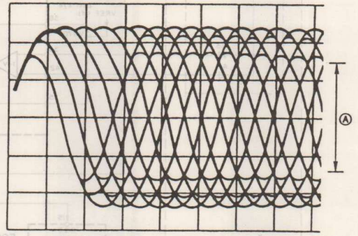

Ⓐ Minimize the variation of amplitude.

(2) BEST EYE (PD BALANCE) ADJUSTMENT

1. Connect the oscilloscope's CH. 1 probe across **TP702** (+) and **TP703** (V-REF) on the Servo P.C.B.
   Oscilloscope setting:
   VOLT ..... 200 mV
   SWEEP ..... 0.5 μsec
   Input coupling ..... AC
2. Switch the player power **ON**, and play the 1 kHz (track 1) on test disc (SZZP1054C).
3. Adjust **VR701** until the RF signal eye pattern amplitude is maximized.

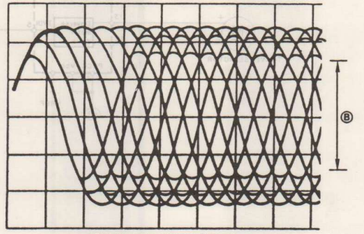

Ⓑ Maximize the amplitude

(3) CHECK OF PLAY OPERATION AFTER ADJUSTMENT

***Checking Skip Search**

1. Play an ordinary musical program disc.
2. Press the skip button to check for normal skip search operation (in both the forward and reverse directions).

***Checking Manual Search**

1. Play an ordinary musical program disc.
2. Press the manual search button to check for smooth manual search operations at either low or high speed (in both the forward and reverse directions).

***Checking Playability**

1. Play the 0.7 mm black dot and the 0.7 mm wedge on the test disc (SZZP1054C) and verify that no sound skip or noise occurs.
2. Play the middle tracks of the uneven test disc and verify that no sound skip or noise occurs.

■ BLOCK DIAGRAM (CD)

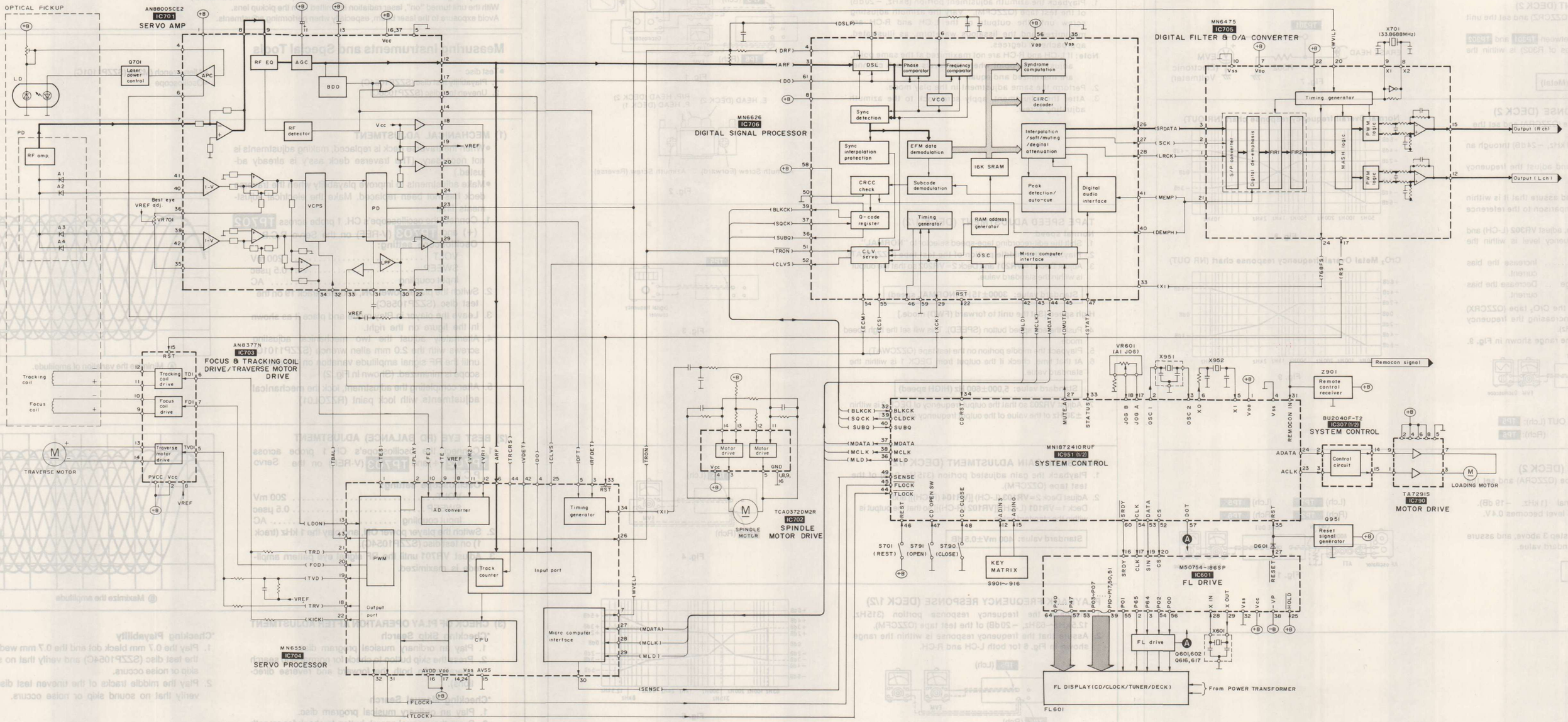

SA-CH55 SA-CH55

■ BLOCK DIAGRAM (MAIN)

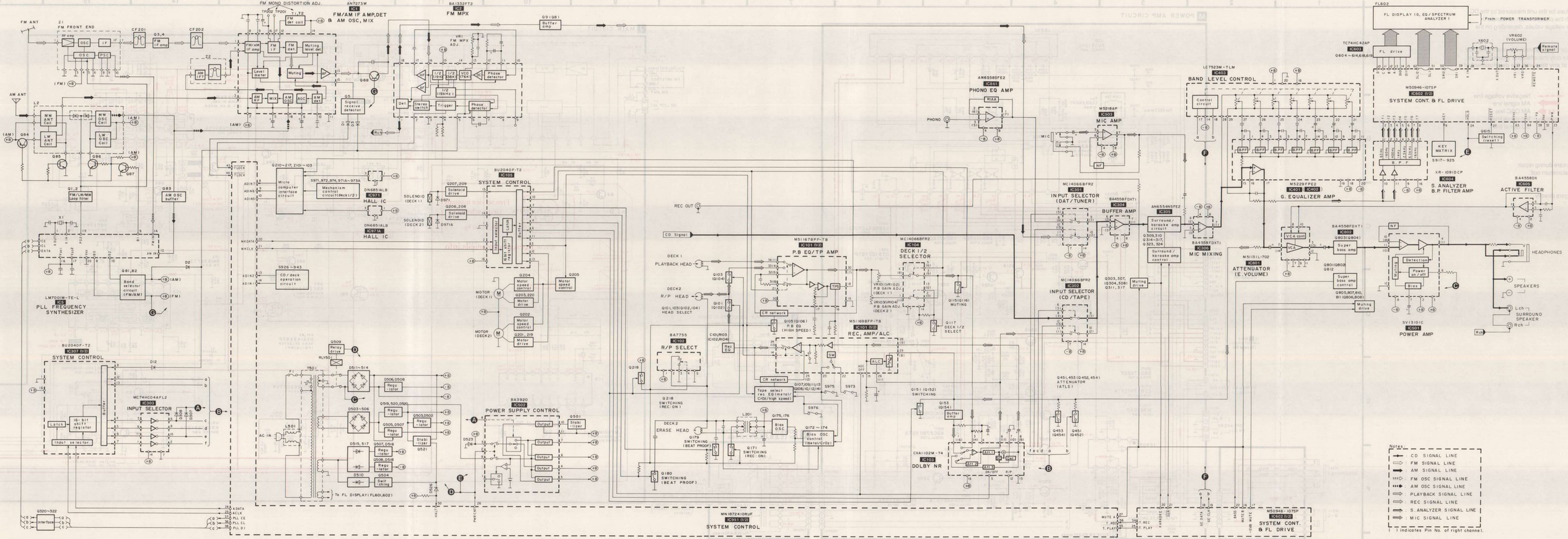

SA-CH55 SA-CH55

■ SCHEMATIC DIAGRAM (POWER AMP AND MAIN)

Notes:

- Indicated voltage values are the standard values for the unit measured by the DC electronic circuit tester (high-impedance) with the chassis taken as standard. Therefore, there may exist some errors in the voltage values, depending on the internal impedance of the DC circuit tester.
- Important safety notice: Components identified by ⚠ mark have special characteristics important for safety. When replacing any of these components, use only manufacturer's specified parts.
- **This schematic diagram may be modified at any time with the development of new technology.**

: Positive voltage line
: FM signal line
: FM OSC line
: Spectrum analyzer signal line
: Rec out signal line
: Negative voltage line
: AM signal line
: AM OSC line
: Mic signal line
: CD signal line

Caution!

IC and LSI are sensitive to static electricity.
Secondary trouble can be prevented by taking care during repair.

- Cover the parts boxes made of plastics with aluminum coil.
- Ground the soldering iron.
- Put a conductive mat on the work table.
- Do not touch the legs of IC or LSI with the fingers directly.

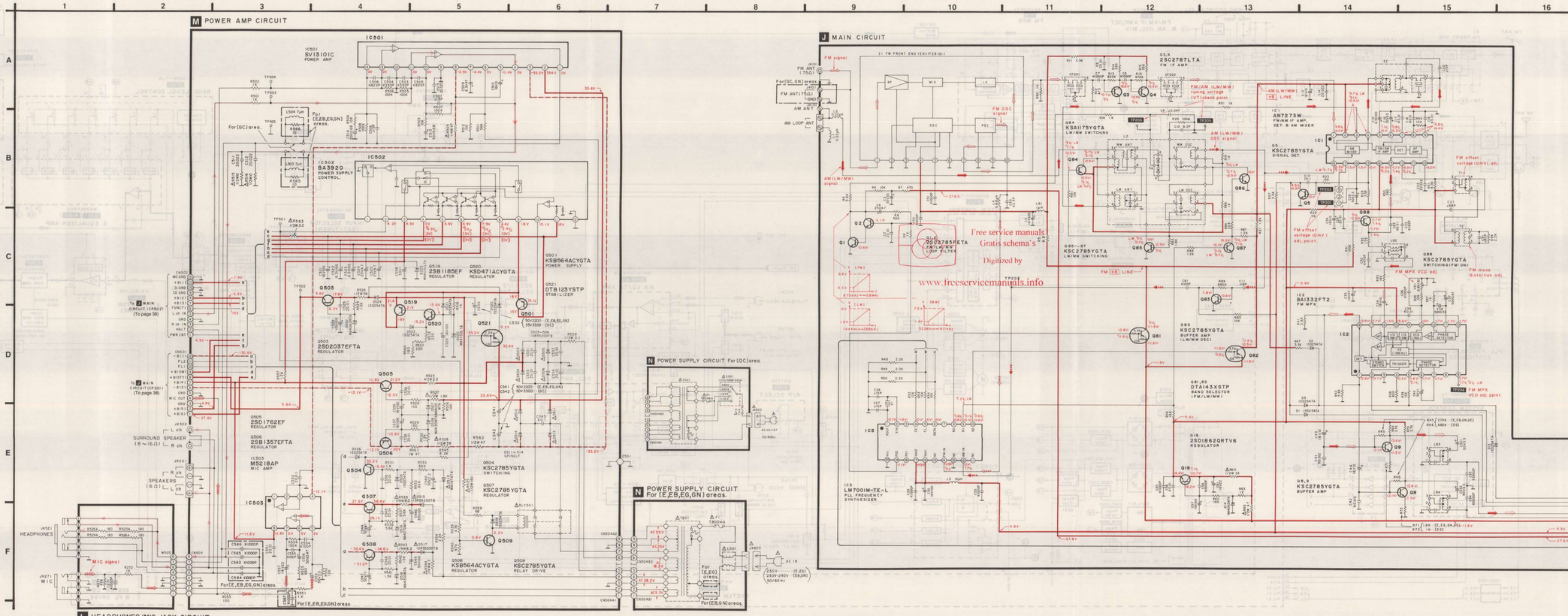

SA-CH55 SA-CH55

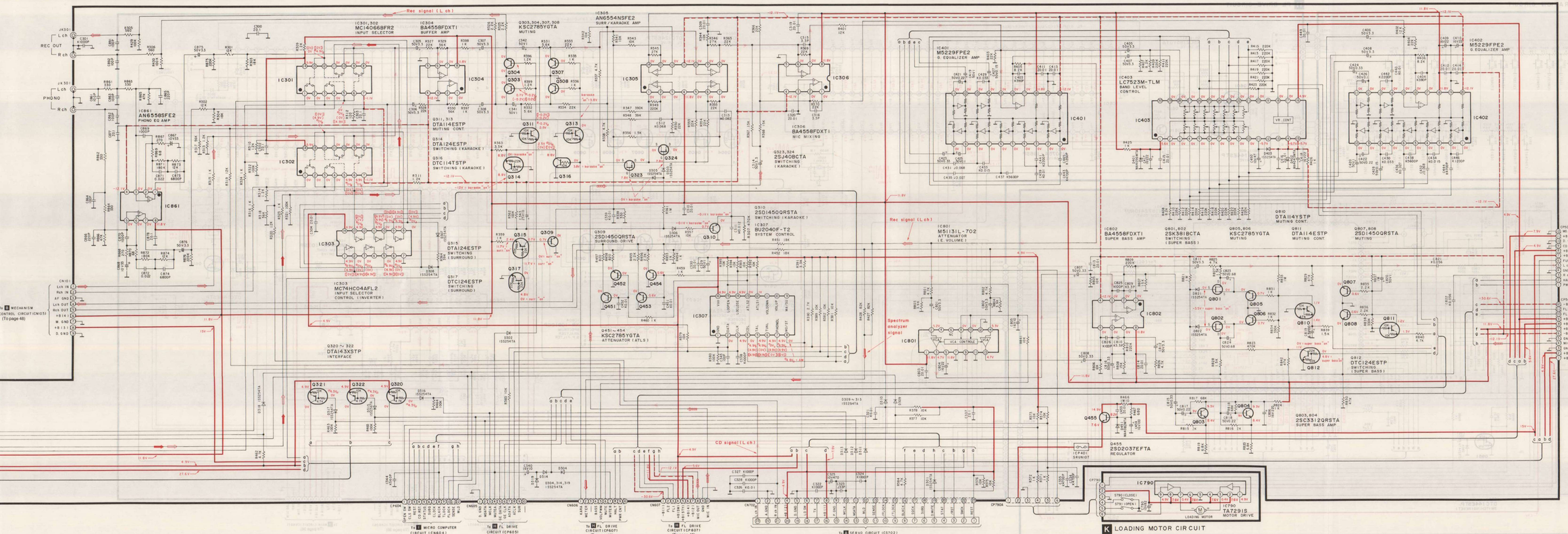

SA-CH55 SA-CH55

■ SCHEMATIC DIAGRAM (CONTROL)

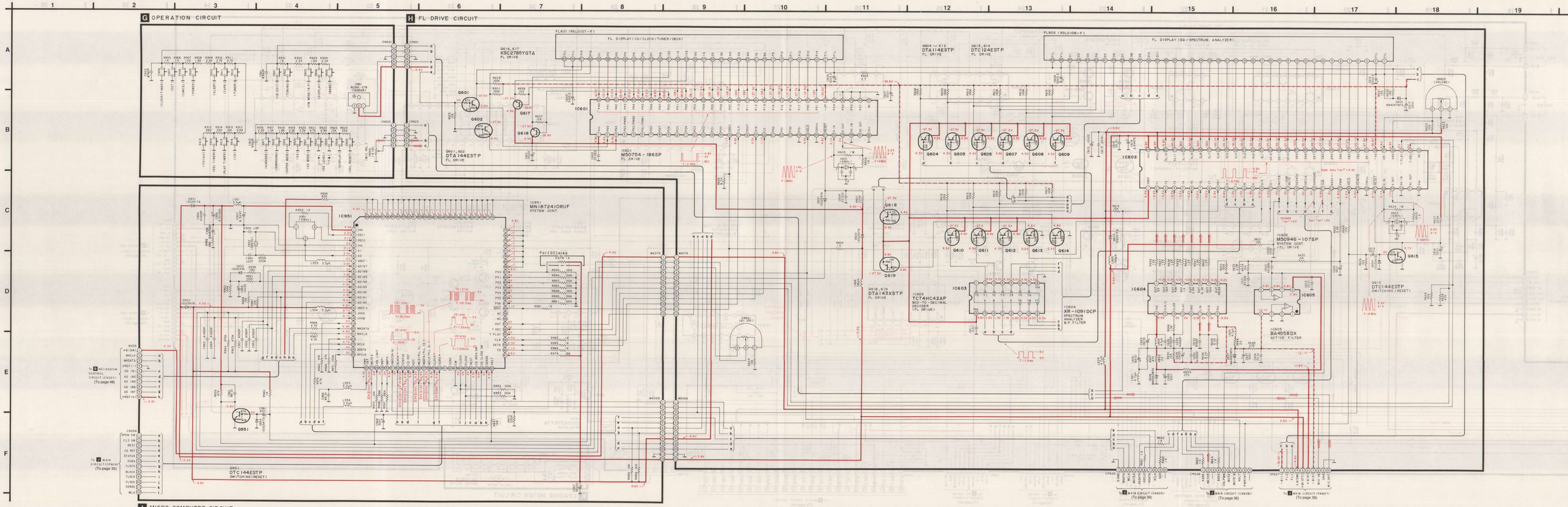

SA-CH55

■ SCHEMATIC DIAGRAM (SERVO)

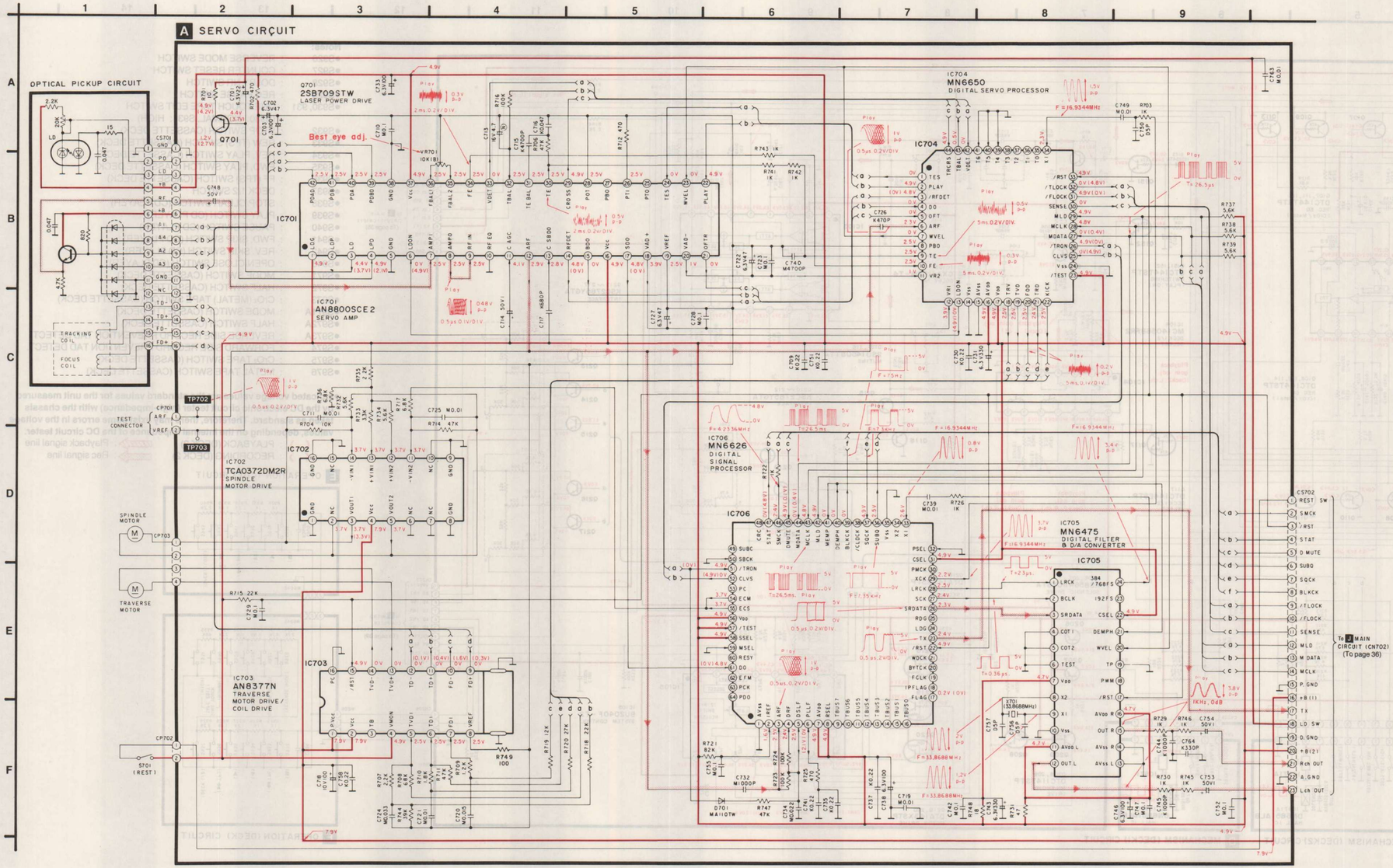

Notes:

- •S701 : RESET SWITCH
- •S790, 791 : DISC TRAY OPEN/CLOSE DETECTION SWITCH
- •S901 : CD EDIT SWITCH
- •S902 : TUNING MODE SWITCH
- •S903 : FM MODE/B.P SWITCH
- •S904 : DISPLAY (MAIN) SWITCH
- •S905 : BAND SWITCH
- •S906 : CLOCK/TIMER SWITCH
- •S907 : SET SWITCH
- •S908 : CANCEL SWITCH
- •S909 : POWER SWITCH
- •S910 : SLEEP SWITCH
- •S911~913, S916 : INPUT SWITCH (S911: TAPE, S912: TUNER, S913: DAT, S916: CD)
- •S914 : REC TIMER SWITCH
- •S915 : PLAY TIMER SWITCH
- •S917 : KARAOKE SWITCH
- •S918 : SURROUND SWITCH
- •S919 : SUPER BASS SWITCH
- •S920 : EQ. (ON/FLAT, DEMO) SWITCH
- •S921 : EQ. MODE, FIXED/USER SWITCH
- •S922, 923 : EQ. LEVEL SWITCH (S922: DOWN, S923: UP)
- •S924 : DISPLAY SWITCH
- •S925 : VOL. PRESET SWITCH

•Indicated voltage values are the standard values for the unit measured by the DC electronic circuit tester (high-impedance) with the chassis taken as standard. Therefore, there may exist some errors in the voltage values, depending on the internal impedance of the DC circuit tester.

*The parenthesized are the values of voltage generated during playing (Test disc 1 kHz, L+R, 0 dB), others are voltage values in stop mode.

[ ] : TUNER MODE ( ) : TAPE 1/2

[ ] : DAT MODE

•Important safety notice:

Components identified by ⚠ mark have special characteristics important for safety. When replacing any of these components, use only manufacturer's specified parts.

- ——— : Positive voltage line
- - - - - : Negative voltage line
- ⇒ : MIC signal line
- ⇒ : Spectrum analyzer signal line
- ⩩ : CD signal

■ SCHEMATIC DIAGRAM (CASSETTE DECK)

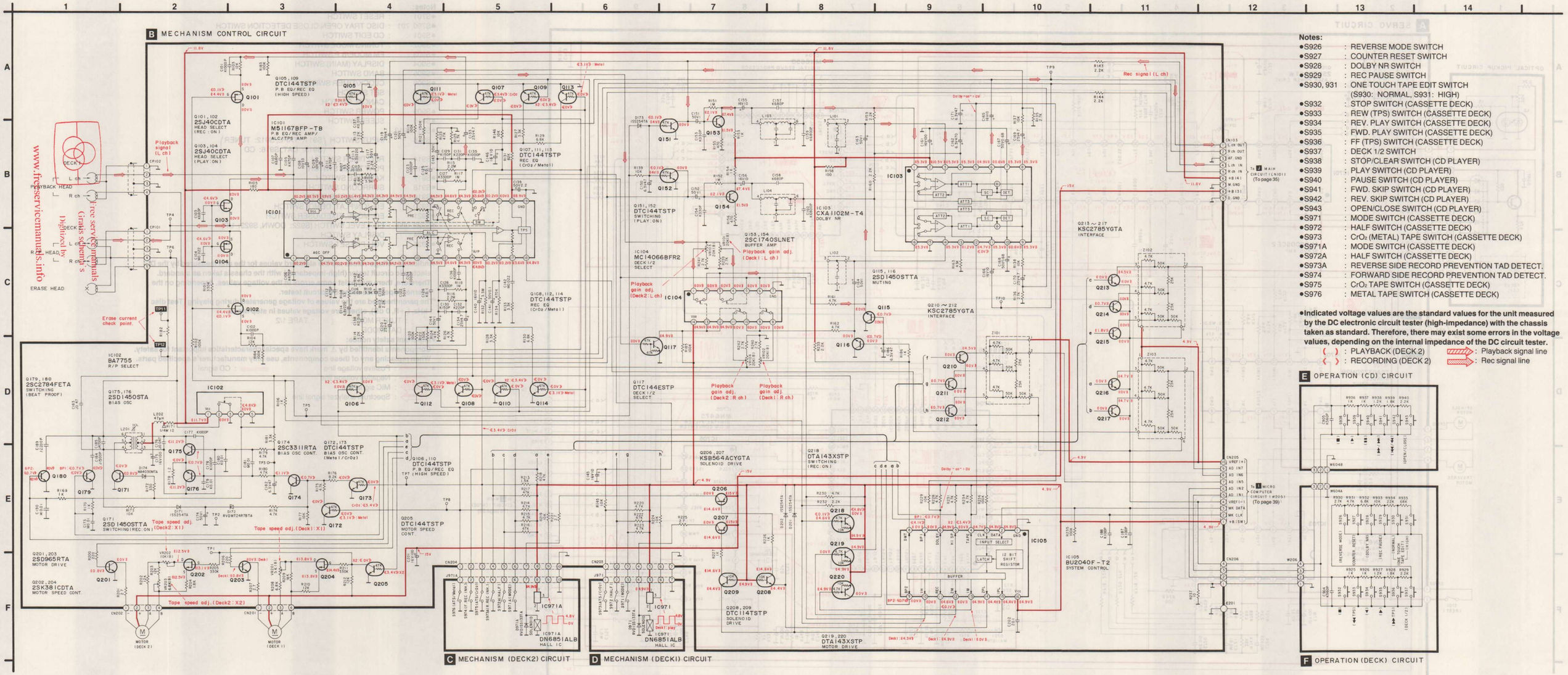

Notes:

- ●S926 : REVERSE MODE SWITCH
- ●S927 : COUNTER RESET SWITCH
- ●S928 : DOLBY NR SWITCH
- ●S929 : REC PAUSE SWITCH
- ●S930, 931 : ONE TOUCH TAPE EDIT SWITCH (S930: NORMAL, S931: HIGH)
- ●S932 : STOP SWITCH (CASSETTE DECK)
- ●S933 : REW (TPS) SWITCH (CASSETTE DECK)
- ●S934 : REV. PLAY SWITCH (CASSETTE DECK)
- ●S935 : FWD. PLAY SWITCH (CASSETTE DECK)
- ●S936 : FF (TPS) SWITCH (CASSETTE DECK)
- ●S937 : DECK 1/2 SWITCH
- ●S938 : STOP/CLEAR SWITCH (CD PLAYER)
- ●S939 : PLAY SWITCH (CD PLAYER)
- ●S940 : PAUSE SWITCH (CD PLAYER)
- ●S941 : FWD. SKIP SWITCH (CD PLAYER)
- ●S942 : REV. SKIP SWITCH (CD PLAYER)
- ●S943 : OPEN/CLOSE SWITCH (CD PLAYER)
- ●S971 : MODE SWITCH (CASSETTE DECK)
- ●S972 : HALF SWITCH (CASSETTE DECK)
- ●S973 : CrO_2 (METAL) TAPE SWITCH (CASSETTE DECK)
- ●S971A : MODE SWITCH (CASSETTE DECK)
- ●S972A : HALF SWITCH (CASSETTE DECK)
- ●S973A : REVERSE SIDE RECORD PREVENTION TAD DETECT.
- ●S974 : FORWARD SIDE RECORD PREVENTION TAD DETECT.
- ●S975 : CrO_2 TAPE SWITCH (CASSETTE DECK)
- ●S976 : METAL TAPE SWITCH (CASSETTE DECK)

●Indicated voltage values are the standard values for the unit measured by the DC electronic circuit tester (high-impedance) with the chassis taken as standard. Therefore, there may exist some errors in the voltage values, depending on the internal impedance of the DC circuit tester.

( ) : PLAYBACK (DECK 2)
( ) : RECORDING (DECK 2)
: Playback signal line
: Rec signal line

SA-CH55 SA-CH55

■ PRINTED CIRCUIT BOARDS

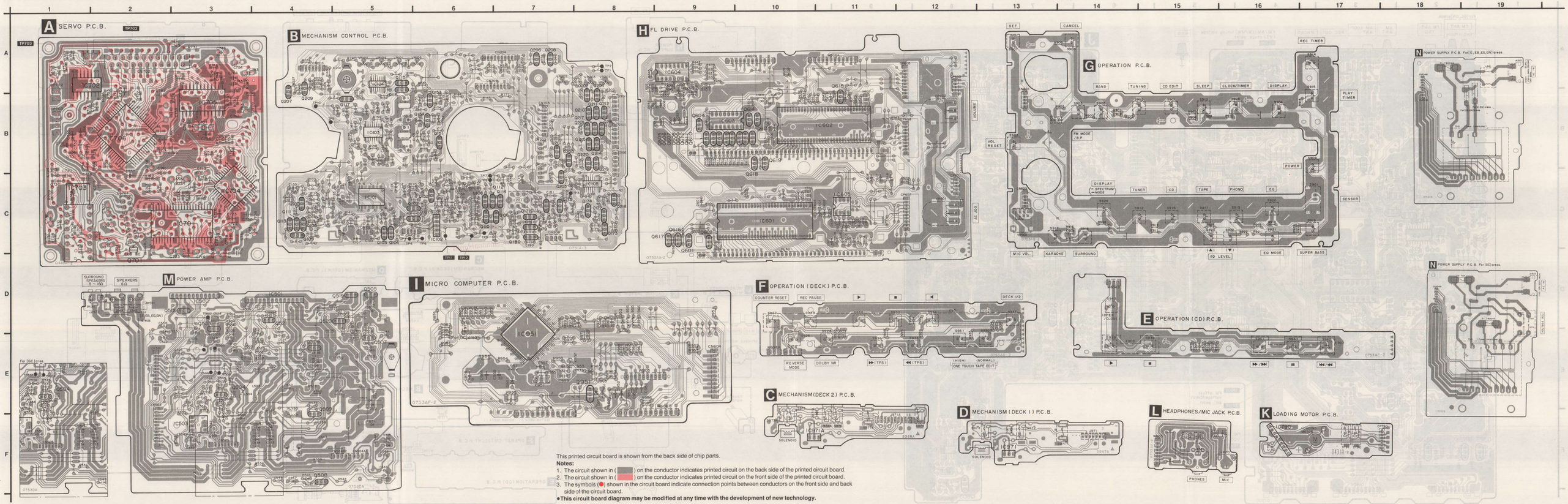

This printed circuit board is shown from the back side of chip parts.

Notes:

1. The circuit shown in ( ) on the conductor indicates printed circuit on the back side of the printed circuit board.
2. The circuit shown in ( ) on the conductor indicates printed circuit on the front side of the printed circuit board.
3. The symbols (●) shown in the circuit board indicate connection points between conductors on the front side and back side of the circuit board.

●This circuit board diagram may be modified at any time with the development of new technology.

■ PRINTED CIRCUIT BOARDS (MAIN)

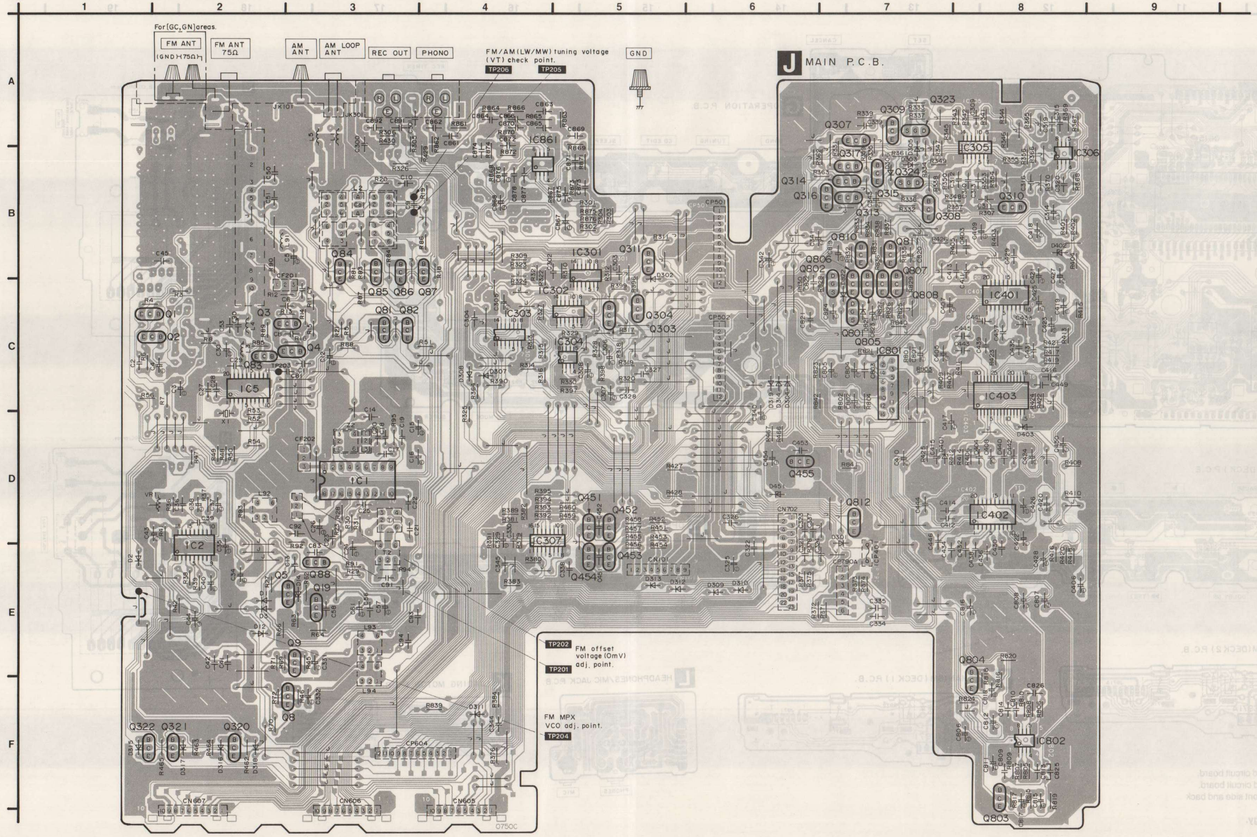

SA-CH55 SA-CH55

■ WIRING CONNECTION DIAGRAM

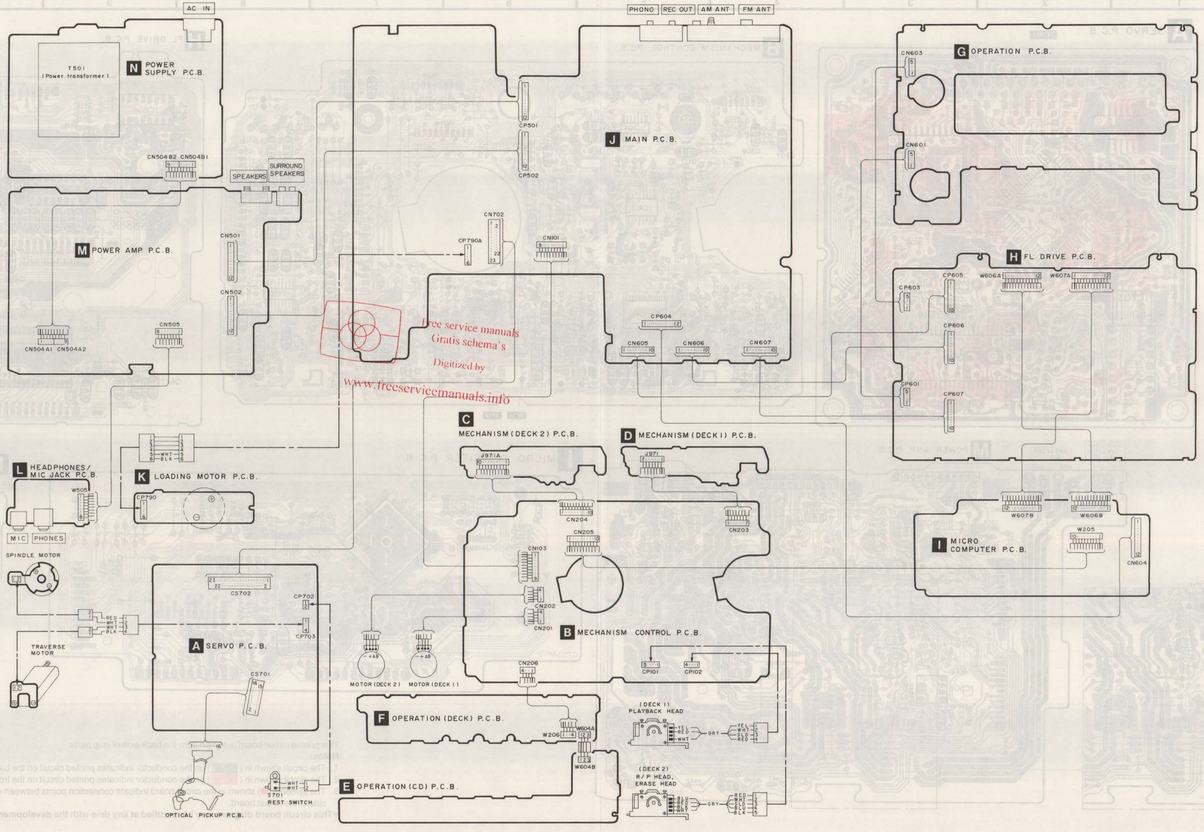

■ TERMINAL GUIDE OF IC'S, TRANSISTOR AND DIODES

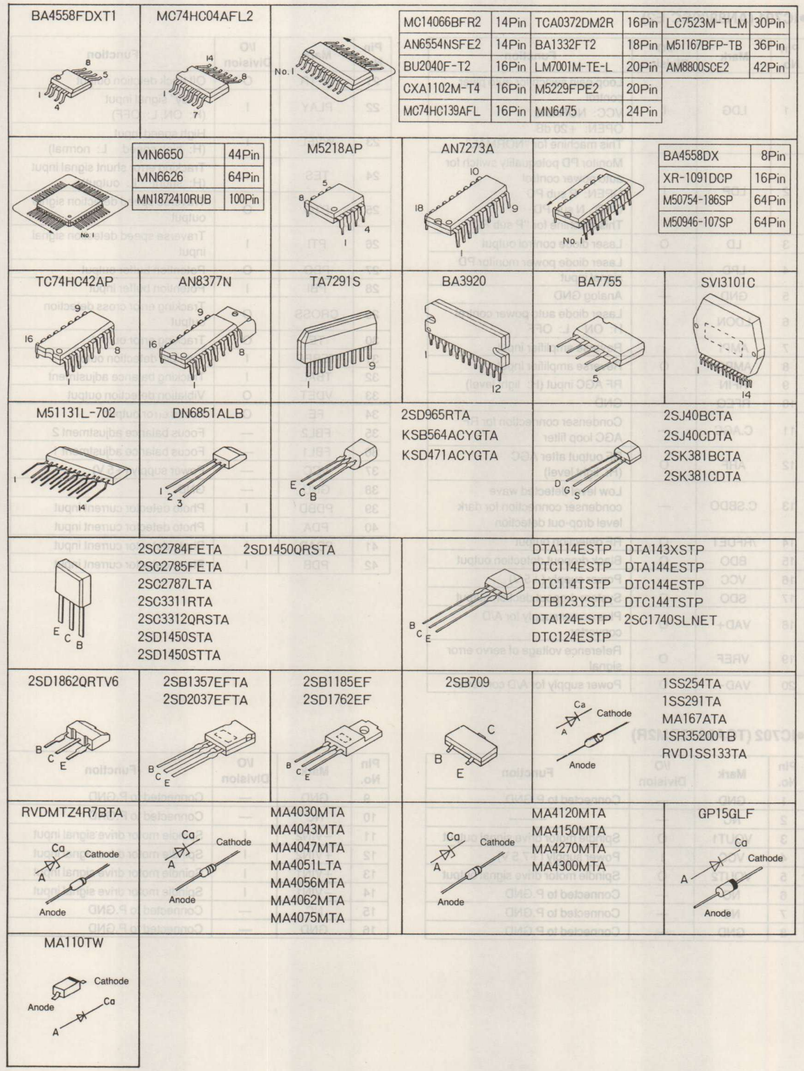

■ TROUBLESHOOTING GUIDE

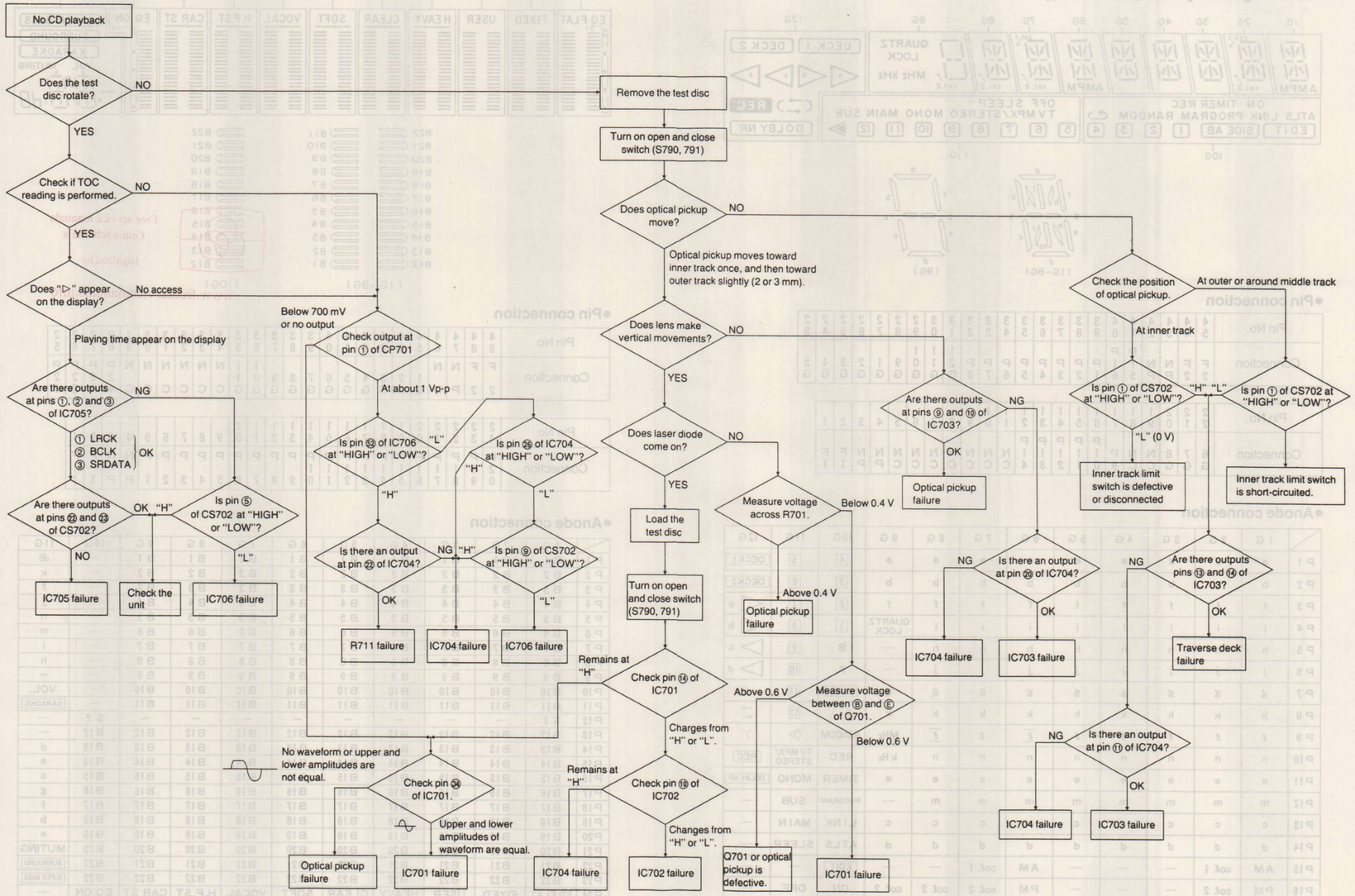

SA-CH55 SA-CH55

■ DESCRIPTION OF PANEL

•Grid assignment [FL601 (RSL0107-F)]

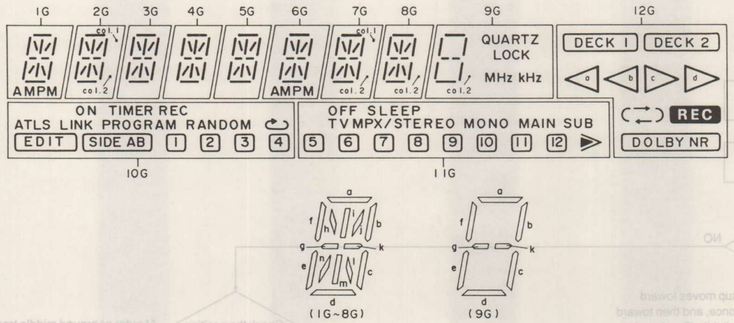

•Pin connection

Pin No.	45	44	43	42	41	40	39	38	37	36	35	34	33	32	31	30	29	28	27	26	25	24	23
Connection	F2	F2	NP	NP	P15	P16	P1	P2	P3	P4	P5	P6	P7	P8	12G	11G	10G	9G	1G	2G	3G	4G	5G

Pin No.	22	21	20	19	18	17	16	15	14	13	12	11	10	9	8	7	6	5	4	3	2	1
Connection	6G	7G	8G	NC	NC	P9	P10	P11	P12	P13	P14	NC	NC	NC	NC	NC	NC	NC	NP	NP	F1	F1

•Anode connection

	1G	2G	3G	4G	5G	6G	7G	8G	9G	10G	11G	12G
P1	a	a	a	a	a	a	a	a	a	4	5	DECK1
P2	b	b	b	b	b	b	b	b	b	3	6	DECK2
P3	f	f	f	f	f	f	f	f	f	2	7	◁ a
P4	i	i	i	i	i	i	i	i	QUARTZ LOCK	1	8	◁ b
P5	h	h	h	h	h	h	h	h	—	B	9	▷ c
P6	j	j	j	j	j	j	j	j	—	A	10	▷ d
P7	g	g	g	g	g	g	g	g	g	SIDE	11	☾
P8	k	k	k	k	k	k	k	k	k	⟲	12	⇄
P9	ℓ	ℓ	ℓ	ℓ	ℓ	ℓ	ℓ	ℓ	MHz	RANDOM	▷	☽
P10	n	n	n	n	n	n	n	n	k Hz	REC	TV MPX/ STEREO	REC
P11	e	e	e	e	e	e	e	e	e	TIMER	MONO	DOLBY NR
P12	m	m	m	m	m	m	m	m	—	PROGRAM	SUB	—
P13	c	c	c	c	c	c	c	c	c	LINK	MAIN	—
P14	d	d	d	d	d	d	d	d	d	ATLS	SLEEP	—
P15	AM	col. 1	—	—	—	AM	col. 1	—	—	EDIT	—	—
P16	PM	col. 2	—	—	—	PM	col. 2	col. 2	col. 2	ON	OFF	—

•Grid assignment [FL602 (RSL0106-F)]

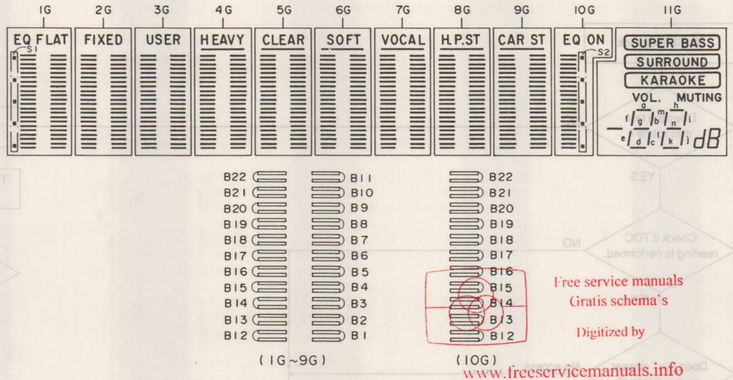

•Pin connection

Pin No.	49	48	47	46	45	44	43	42	41	40	39	38	37	36	35	34	33	32	31	30	29	28	27	26	25
Connection	F2	F2	NP	NP	1G	2G	3G	4G	5G	6G	7G	8G	9G	10G	11G	NC	NC	NC	NC	NC	NC	P24	P23	P22	P21

Pin No.	24	23	22	21	20	19	18	17	16	15	14	13	12	11	10	9	8	7	6	5	4	3	2	1
Connection	P20	P19	P18	P17	P16	P15	P14	P13	P12	P11	P10	P9	P8	P7	P6	P5	P4	P3	P2	P1	N	N	F1	F1

•Anode connection

	1G	2G	3G	4G	5G	6G	7G	8G	9G	10G	11G
P1	B1	B1	B1	B1	B1	B1	B1	B1	B1	—	dB
P2	B2	B2	B2	B2	B2	B2	B2	B2	B2	—	k
P3	B3	B3	B3	B3	B3	B3	B3	B3	B3	—	ℓ
P4	B4	B4	B4	B4	B4	B4	B4	B4	B4	—	j
P5	B5	B5	B5	B5	B5	B5	B5	B5	B5	—	n
P6	B6	B6	B6	B6	B6	B6	B6	B6	B6	—	m
P7	B7	B7	B7	B7	B7	B7	B7	B7	B7	—	i
P8	B8	B8	B8	B8	B8	B8	B8	B8	B8	—	h
P9	B9	B9	B9	B9	B9	B9	B9	B9	B9	—	—
P10	B10	B10	B10	B10	B10	B10	B10	B10	B10	—	VOL.
P11	B11	B11	B11	B11	B11	B11	B11	B11	B11	—	KARAOKE
P12	S1	—	—	—	—	—	—	—	—	S2	—
P13	B12	B12	B12	B12	B12	B12	B12	B12	B12	B12	—
P14	B13	B13	B13	B13	B13	B13	B13	B13	B13	B13	d
P15	B14	B14	B14	B14	B14	B14	B14	B14	B14	B14	e
P16	B15	B15	B15	B15	B15	B15	B15	B15	B15	B15	c
P17	B16	B16	B16	B16	B16	B16	B16	B16	B16	B16	g
P18	B17	B17	B17	B17	B17	B17	B17	B17	B17	B17	f
P19	B18	B18	B18	B18	B18	B18	B18	B18	B18	B18	b
P20	B19	B19	B19	B19	B19	B19	B19	B19	B19	B19	a
P21	B20	B20	B20	B20	B20	B20	B20	B20	B20	B20	MUTING
P22	B21	B21	B21	B21	B21	B21	B21	B21	B21	B21	SURROUND
P23	B22	B22	B22	B22	B22	B22	B22	B22	B22	B22	SUPER BASS
P24	EQ FLAT	FIXED	USER	HEAVY	CLEAR	SOFT	VOCAL	H.P.ST	CAR ST	EQ ON	—

■ FUNCTIONS OF IC TERMINALS

•IC701 (AN8800SC-E2)

Pin No.	Mark	I/O Division	Function
1	LDG	I	Loop gain switch for auto pwer control VCC: NORMAL OPEN: +20 dB This machine for "NORMAL"
2	LDP	I	Monitor PD polequality switch for auto power control OPEN: P sub PD GND: N sub PD This machine for "P sub PD"
3	LD	O	Laser diode control output
4	LPD	I	Laser diode power monitor PD signal input
5	GND	—	Analog GND
6	LDON	I	Laser diode auto power control H: ON L: OFF
7	AMPI	I	Reverse amplifier input
8	AMPO	O	Reverse amplifier input
9	RFIN	I	RF AGC input (H: light level)
10	RFEQ	—	GND
11	C.AGC	—	Condenser connection for RF AGC loop filter
12	ARF	O	RF output after AGC (H: light level)
13	C.SBDO	—	Low level detected wave condenser connection for dark level drop-out detection
14	/RFDET	O	RF detection output
15	BDO	O	Black dropout detection output
16	VCC	—	Power supply (+5 V)
17	SDO	O	System dropout dection output
18	VAD+	O	Plus power supply for A/D converter
19	VREF	O	Reference voltage of servo error signal
20	VAD−	O	Power supply for A/D converter

Pin No.	Mark	I/O Division	Function
21	OFTR	O	Off track detction output
22	PLAY	I	"Play" signal input (H: ON, L: OFF)
23	WVEL	I	High speed input (H: high speed L: normal)
24	TES	I	Tracking error shunt signal input (H: shunt L: output)
25	PTO	O	Traverse speed detection signal output
26	PTI	I	Traverse speed detection signal input
27	PBO	O	Potention buffer output
28	PBI	I	Potention buffer input
29	CROSS	O	Tracking error cross detection output
30	TE	O	Tracking error output
31	TEBPF	I	Tremble detection output
32	TBAL	I	Tracking balance adjustment
33	VDET	O	Viblation detection output
34	FE	O	Focus error output
35	FBL2	—	Focus balance adjustment 2
36	FBL1	—	Focus balance adjustment 1
37	VCC	—	Power supply (+5 V)
38	GND	—	GND
39	PDBD	I	Photo detector current input
40	PDA	I	Photo detector current input
41	PDAD	I	Photo detector current input
42	PDB	I	Photo detector current input

•IC702 (TCA0372DM2R)

Pin No.	Mark	I/O Division	Function
1	GND	—	Connected to P.GND
2	NC	—	———
3	VOUT1	O	Spindle motor drive signal output
4	VCC	I	Power supply (+7.5 V)
5	VOUT2	O	Spindle motor drive signal output
6	NC	—	Connected to P.GND
7	NC	—	Connected to P.GND
8	GND	—	Connected to P.GND

Pin No.	Mark	I/O Division	Function
9	GND	—	Connected to P.GND
10	NC	—	Connected to P.GND
11	−VIN2	I	Spindle motor drive signal input
12	+VIN2	I	Spindle motor drive signal input
13	+VIN1	I	Spindle motor drive signal input
14	−VIN1	I	Spindle motor drive signal input
15	NC	—	Connected to P.GND
16	GND	—	Connected to P.GND

SA-CH55

SA-CH55

•IC703 (AN8377N)

Pin No.	Mark	I/O Division	Function
1	PVCC	I	Driver power supply (+5 V)
2	VCC	I	Power supply (+5 V)
3	TB	O	External transistor base driving output
4	VMON	O	Voltage (+5 V) output
5	TVDI	I	Traverse error signal input
6	FDI	I	Focus error signal input
7	TDI	I	Tracking error signal input
8	VREF	I	Reference voltage input
9	TD−	O	Inverting output of tracking driver
10	TD+	O	Non-inverting output of tracking driver
11	FD−	O	Inverting output of focus driver
12	FD+	O	Non-inverting output of focus driver
13	TVD−	O	Inverting output of traverse driver
14	TVD+	O	Non-inverting output of traverse driver
15	RESET	O	Reset signal output
16	PC	I	PC input

•IC704 (MN6650)

Pin No.	Mark	I/O Division	Function
1	TES	O	Tracking error shunt signal (H: Shunt)
2	PLAY	O	"Play" signal (H: play)
3	/RFDET	I	RF detection signal (L: detection)
4	DO	I	Dropout signal (H: dropout)
5	OFT	I	Off track signal (H: off track)
6	ARF	I	RF signal input
7	WVEL	O	High speed status signal (H: high speed)
8	PBO	I	Potension buffer signal input (Analog input)
9	TE	I	Tracking error signal input (Analog input)
10	FE	I	Focus error signal input (Analog input)
11	VR2	I	Reference voltage for A/D (Low reverse)
12	VR1	I	Reference voltage for A/D (High reverse)
13	LDON	O	Laser "ON" signal (H: ON)
14	VSS	I	Power supply (Digital system OV)
15	AVSS	I	Power supply (Analog system OV)
16	AVDD	I	Power supply (Analog system +5 V)
17	VDD	I	Power supply (Digital system +5 V)
18	TRV	O	Traverse force transmission output
19	TVD	O	Traverse drive output
20	FOD	O	Focus drive output
21	TRD	O	Tracking drive output
22	KICK	O	Kick pulse output
23	/TEST	I	Test terminal ("L", normal)
24	VSS	I	Power supply (Digital system OV)
25	CLVS	I	Spindle servo condition signal (H: CLV L: Rough servo)
26	/TRON	O	Tracking servo "ON" signal (L: ON)
27	MDATA	I	Micro computer command data input
28	MCLK	I	Micro computer command clock signal input
29	MLD	I	Micro computer command load signal input (L: load)
30	SENSE	O	Sense signal input
31	/FLOCK	O	Focus servo pull-in signal (L: take-in condition)
32	/TLOCK	O	Tracking servo pull-in signal (L: take-in condition)
33	/RST	I	Reset input (L: reset)
34	XI	I	Clock input (fXI=16.9344 MHz)
35	T0	O	Test terminal ("Open", normal)
36	T1	O	Test terminal ("Open", normal)
37	T2	O	Test terminal ("Open", normal)
38	T3	O	Test terminal ("Open", normal)
39	T4	I	Test terminal ("L", normal)
40	T5	I	Test terminal ("L", normal)
41	T6	I	Test terminal ("L", normal)
42	VDET	I	Vibration detection signal input (H: detection)
43	TBAL	O	Tracking balance adjustment output
44	TRCRS	I	Track cross signal input

•IC705 (MN6475)

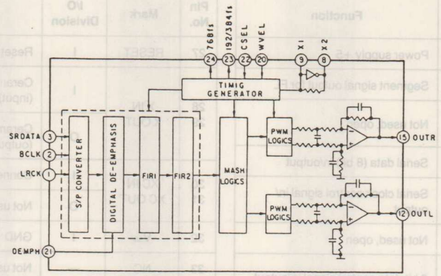

Pin No.	Mark	I/O Division	Function
1	LRCK	I	L.R detection signal
2	BCLK	I	Bit clock for SRDATA
3'	SRDATA	I	Serial data input
4	COT1	—	Connected to D.GND
5	COT2	—	Connected to D.GND
6	TEST	—	Connected to D.GND
7	VDD	I	Digital system power supply (+5 V)
8	×2	—	Crystal oscillator connection
9	×1	—	Crystal oscillator connection
10	VSS	—	Connected to GND
11	AVDDL	I	Power supply (+5 V)
12	OUT.L	O	Lch output
13	AVSSL	—	Connected to A.GND
14	AVSSR	—	Connected to A.GND
15	OUT.R	O	Rch output
16	AVDDR	I	Power supply (+5 V)
17	/RST	I	Reset signal input (L: reset)
18	PWM	—	NC
19	CP	—	Connected to D.GND
20	WVEL	I	High speed status signal input (H: high speed)
21	DEMPH	I	De-emphasis ON signal (H: ON)
22	CSEL	I	Test terminal
23	192FS/ 384FS	—	NC
24	768FS	O	Clock output

•IC706 (MN6626)

Pin No.	Mark	I/O Division	Function
1	AVSS	I	GND for DSL, PLL circuit (OV)
2	IRFF	I	Reference electric current input
3	ARF	I	RF signal input
4	DRF	I	DSL bias
5	DSLF	O	DSL loop filter
6	PLLF	—	PLL loop filter
7	AVDD	I	Power supply for DSL. PLL
8	RSEL	I	RF signal quality decision terminal
9 ~ 16	TBUS7 ~ TBUS0	O	Test terminal (normal: Open)
17	FLAG	O	Error/frag output
18	IPFLAG	O	Interpolation flag
19	FCLK	O	Crystal frame clock
20	BTTCK	O	Byte clock
21	WDCK	O	Ward clock
22	/RST	I	Reset input
23	TX	O	Digital audio interface output
24	LDG	O	Lch deglitch signal
25	RDG	O	Rch deglitch signal
26	SRDATA	O	Serial data signal
27	SCK	O	Bit clock for SRDATA
28	LRCK	O	L, R discrimination signal
29	XCK	O	Crystal oscillator clock output
30	PMCK	O	1/192 devided frequency clock signal of crystal oscillator
31	CSEL	I	Test terminal (normal: L)
32	PSEL	I	Test terminal (normal: L)
33	X1	—	Crystal oscillator circuit input
34	X2	—	Crystal oscillator circuit output
35	VSS	I	Power supply (OV)
36	SUBQ	O	Sub-code Q-code output
37	SQCK	I	External clock for sub-code Q resister
38	/CLDCK	O	Sub-code frame clock signal
39	BLKCK	O	Sub-code block clock signal
40	DEMPH	O	De-emphasis ON signal
41	MEMP	I	Emphasis signal input (For digital audio interface)
42	MLD	I	Micro computer command load signal input (L: load)
43	MCLK	I	Micro computer command clock signal input
44	MDATA	I	Micro computer command data input
45	DMUTE	I	Muting input
46	SMCK	O	MSEL=½ devided frequercy clock signal of crystal oscillator when "H" level MSEL=¼ devided frequency clock signal of crystal oscillator when "L" level
47	STAT	O	Status signal
48	CRC	O	Sub-code CRC check result (H: OK, L: NG)
49	SUBC	O	Sub-code serial output data
50	SBCK	I	Clock input for sub-code serial output
51	/TRON	I	Tracking servo ON signal
52	CLVS	O	Spindle servo phase synchronization condition signal (H: CLV L: rough servo)
53	PC	O	Sprindle motor ON signal (L: ON)
54	ECM	O	Spindle motor drive signal (Force mode output)
55	ECS	O	Spindle motor drive signal (Servo error signal output)
56	VDD	I	Power supply (+5 V)
57	/TEST	I	Test terminal (normal: H)
58	SSEL	I	SUBQ terminal Output mode switch terminal (H: Q code buffer mode)
59	MSEL	I	SMCK terminal output frequency switch terminal
60	RESY	O	Resynchronization signal of frame synchronization (H: synchronization, L: not)
61	DO	I	Drop-out signal (H: drop-out)
62	EFM	O	EFM signal output
63	PCK	O	PLL extract clock output
64	PDO	—	Phase comparison signal of EFM signal and PCK signal

•IC602 (M50946-107SP)

Pin No.	Mark	I/O Division	Function
1	VREF	I	Reference voltage (Power supply +5 V)
2	f1	I	Spectrum analizer control signal input 63 Hz
3	f2	I	Spectrum analizer control signal input 160 Hz
4	f3	I	Spectrum analizer control signal input 400 Hz
5	f4	I	Spectrum analizer control signal input 1 kHz
6	f5	I	Spectrum analizer control signal input 2.5 kHz
7	f6	I	Spectrum analizer control signal input 6.3 kHz
8	f7	I	Spectrum analizer control signal input 12.5 kHz
9	KEY	I	Key signal input (8 bit A/D signal)
10 ~ 13	D~A	O	Segment signal output for FL
16	MUTE B	O	Muting signal output
17	−12 dB MUTE	O	−12 dB Muting control signal output for electronic volume
18	GEDATA	O	G, EQ control signal output
19	GECLK	O	G, EQ clock signal output
20	KARAOKE	O	KARAOKE control signal output
21	SUR	O	Surround control signal output
22	BASS	O	Super bass control signal output
23	PWM	O	PWM control signal output for electronic volume
24	HOLD	I	Power off detection input "L level"=OFF
25	REMOTET	I	Remote control receiving signal input
26	CNV_{SS}	—	Connected to GND
27	RESET	I	Reset control signal input
28	X IN	I	Ceramic Oscillator connection (input)
29	X OUT	O	Ceramic Oscillator connection (output)
30	XC IN	I	Connected to GND
31	XC OUT	O	Not used, open
32	V_{ss}	I	Connected to GND
33	NC	—	Not used
34	T.REC	I	Tape recording control signal input
35	T.PLAY	I	Tape playback control signal input
36 ~ 37	VR0, VR1	I	Level encoder volume control signal input
38	−Vp	I	Pull down voltage input
39 ~ 62	SR1~SR12 SL1~SL12	O	Segment signal output for FL
63	AV_{CC}	I	Power supply +5
64	V_{CC}	I	Power supply +5

•IC601 (M50754-186SP)

Pin No.	Mark	I/O Division	Function
1	V_{CC}	I	Power supply +5
2, 3	P65, P64	O	Segment signal output for FL
4~7 8~15	P63~P60 P27~P20	—	Not used, open
16	SRDY	I/O	Serial data (8 bit) in/output
17	CLK	I/O	Serial clock control signal in/output
18	SOUT	—	Not used, open
19 20	SIN SC	I/O	8 bit data control signal in/output
21 ~ 23	P32~P30	I/O	Not used, open
24	P51	I	Connected to GND
25	HOLD	I	Power off detection input "Level"=OFF
26	CNV_{SS}	I	GND
27	RESET	I	Reset control signal input
28 29	X IN X OUT	I / O	Ceramic oscillator connection (input) / Ceramic Oscillator connection (output)
30 31	XC IN XC OUT	I / O	Connected to GND / Not used, open
32	V_{ss}	I	GND
33	NC	—	Not used
34 ~ 37	P57~P54	—	Not used, open
38	−Vp	I	Pull down voltage input
39 ~ 56	P51, P50 P17~P14 P47~P40 P13~P10 P07~P00	O	Segment Signal output for FL

•IC951 (MN1872410RUB)

Pin No.	Mark	I/O Division	Function
1	VDD	I	Power supply +5.6 V
2, 3	OSC 1, 2	I	Reference OSC terminal (connected to crystal oscillator 4 MHz)
4	V_{ss}	I	GND
5, 6	XI, XO	I/O	Clock OSC terminal (connected to ceramic oscillator 32 kHz)
7	VREF−	I	Reference voltage input (connected to GND)
8	ADIN7	I	Deck 2 Forward Rec, Inh. switch select input Terminal
9	ADIN6	I	Deck 2 cassette half detection signal input "HI" level in half detection switch in ON mode. "LOW" level in half detection switch in OFF mode.
10	ADIN5	I	Deck 1 cassette half detection signal input "HI" level in half detection switch in ON mode. "LOW" level in half detection switch in OFF mode.
11	ADIN4	—	Not used
12	ADIN3	I	Key control signal input (EDIT, TUNING, MODE, TITLE, DISPLAY, BAND)
13	ADIN2	I	Cassette operation control signal input
14	ADIN1	I	CD operation control signal input
15	ADIN0	I	Key control signal input (TIMER, SET, TAPE, SLEEP, CANCEL, TUNER)
16	VREF+	I	Reference voltage input (+5)
17 18	JOGA JOGB	I	JOG dial signal input
19 ~ 22	—	—	—
20	MKDATA	O	Cassette deck control data output
21	MKCLK	O	Cassette deck control clock signal output
23	ACLK	O	Audio control clock signal output
24	ADATA	O	Audio control data output
25	SPCLK	—	Not used
26	PWRCNT	O	Output for voltage control signal
27	MUTE A	O	Output for muting control signal
28 29 30	VOLLIMIT MBP1 MBP2	—	Not used
31	REMOC IN	I	Remote control receiving signal input
32	BLKCK	I	Sub-code block clock signal (CD)
33	STATUS	I	CD start control signal input
34	CD RST	I/O	CD Reset control signal in/output
35	RST	I	Micro computer reset control signal input
36	MLD/PLL CL	O	CD Process signal output and PLL tuner clock signal output
37	MDATA/ PLL CE	O	CD Process data signal output and PLL tuner strobe signal output
38	MCLK/ PLL DI	O	CD Process clock control signal output and PLL tuner data signal output
39	CLDCK	I	CD sub- code clock signal
40	SUBQ	I	CD sub- code data input
41	—	—	—
42	SYNC		
43	CM	—	Connected to GND
44	TLOCK	I	Tracking signal input and Tuner received moniter signal input
45	FLOCK	I	Focus Servo clock signal and FM ST received signal input
46	REST	I	Reset Signal input
47	CD OPEN SW	I	CD open detection switch signal input
48	CD CLOSE SW	I	CD Close detection switch signal input
49	SENSE	I	DISC sense signal input
50	HALT	I	Power down detection signal input
51	—	—	—
52	CS	I/O	8 Bit signal data in/output
53	DATA	I/O	8 Bit signal data in/output
54	CLK	I/O	Serial clock data signal in/output
55	T. PLAY	O	Playback control signal output
56	T. REC	O	Rec control signal output
57	DOT	O	Segment signal output
58 59	NC	—	—
60	SROY	I/O	8 Bit Serial data in/output
61 ~ 67	P56 ~ P50	I	Reference voltage (BIAS) input
68 ~ 100	—	—	—

■ REPLACEMENT PARTS LIST

Notes : * Important safety notice:
Components identified by ⚠ mark have special characteristics important for safety. When replacing any of these components use only manufacturer's specified parts.
* The parenthesized indications in the Remarks columns specify the areas. (Refer to the cover page for area.)
Parts without these indications can be used for all areas.
* Remote Control Ass'y:
Supply period for three years from termination of production.

Ref. No.	Part No.	Part Name & Description	Remarks
		INTEGRATED CIRCUIT(S)	
IC1	AN7273W	I. C, FM/AM IF AMP. /DET.	
IC2	BA1332FT2	I. C, FM MPX VCO.	
IC5	LM7001M-TE-L	I. C, PLL FREQ. SYNTHESIZER	
IC101	M51167BFP-TB	I. C, P. B. EQ. /REC. AMP/ALC/TPS	
IC102	BA7755	I. C, R/P SELECT	
IC103	CXA1102M-T4	I. C, DOLBY NR	
IC104	MC14066BFR2	I. C, DECK 1/2 SELECT	
IC105	BU2040F-T2	I. C, SYSTEM CONTROL	
IC301, 302	MC14066BFR2	I. C, INPUT SELECTOR	
IC303	MC74HC04AFL2	I. C, INPUT SELECTOR CONTROL	
IC304	BA4558FDXT1	I. C, BUFFER AMP.	
IC305	AN6554NSFE2	I. C, SURROUND/KARAOKE AMP.	
IC306	BA4558FDXT1	I. C, MIC MIXING	
IC307	BU2040F-T2	I. C, SYSTEM CONTROL	
IC401, 402	M5229FPE2	I. C, G. EQUALIZER AMP.	
IC403	LC7523M-TLM	I. C, BAND LEVEL CONTROL	
IC501	SVI3101C	I. C, POWER AMP.	
IC502	BA3920	I. C, POWER SUPPLY CONTROL	
IC503	M5218AP	I. C, MIC AMP.	
IC601	M50754-186SP	I. C, FL DRIVE	
IC602	M50946-107SP	I. C, SYSTEM CONT. /FL DRIVE	
IC603	TC74HC42AP	I. C, BCD-TO-DECIMAL DECODER	
IC604	XR-1091DCP	I. C, SPECTRUM ANALYZER/B. P. F	
IC605	BA4558DX	I. C, ACTIVE FILTER	
IC701	AN8800SCE2	I. C, SERVO AMP.	
IC702	TCA0372DM2R	I. C, SPINDLE MOTOR DRIVE	
IC703	AN8377N	I. C, TRAVERSE MOTOR DRIVE	
IC704	MN6650	I. C, DIGITAL SERVO PROCESSOR	
IC705	MN6475	I. C, DIGITAL FILTER	
IC706	MN6626	I. C, DIGITAL SIGNAL PRO.	
IC790	TA7291S	I. C, MOTOR DRIVE	
IC801	M51131L-702	I. C, ATTENUATOR(E. VOLUME)	
IC802	BA4558FDXT1	I. C, SUPER BASS AMP.	
IC861	AN6558SFE2	I. C, PHONO EQ. AMP.	
IC951	MN1872410RUF	I. C, SYSTEM CONTROL	
IC971	DN6851ALB	I. C, HALL(DECK1)	
IC971A	DN6851ALB	I. C, HALL(DECK2)	
		IC PROTECTOR(S)	
ICP401	SRUN10	IC PROTECTOR	
		TRANSISTOR(S)	

Ref. No.	Part No.	Part Name & Description	Remarks
Q1	2SC2785FE	TRANSISTOR	
Q2	2SC2785FE	TRANSISTOR	
Q3, 4	2SC2787L	TRANSISTOR	
Q5	KSC2785YGTA	TRANSISTOR	
Q8, 9	KSC2785YGTA	TRANSISTOR	
Q19	2SD1862QRTV6	TRANSISTOR	
Q81, 82	DTA143XSTP	TRANSISTOR	
Q83	KSC2785YGTA	TRANSISTOR	
Q84	KSA1175YGTA	TRANSISTOR	
Q85-88	KSC2785YGTA	TRANSISTOR	
Q101-104	2SJ40CDTA	TRANSISTOR	
Q105-114	DTC144TSTP	TRANSISTOR	
Q115, 116	2SD1450STTA	TRANSISTOR	
Q117	DTC144ESTP	TRANSISTOR	
Q151, 152	DTC144TSTP	TRANSISTOR	
Q153, 154	2SC1740SLNET	TRANSISTOR	
Q171	2SD1450STTA	TRANSISTOR	
Q172, 173	DTC144TSTP	TRANSISTOR	
Q174	2SC3311R	TRANSISTOR	
Q175, 176	2SD1450RTA	TRANSISTOR	
Q179, 180	2SC2784FETA	TRANSISTOR	
Q201	2SD965Q	TRANSISTOR	
Q202	2SK381BCDTA	TRANSISTOR	
Q203	2SD965Q	TRANSISTOR	
Q204	2SK381BCDTA	TRANSISTOR	
Q205	DTC144TSTP	TRANSISTOR	
Q206, 207	KSB564ACYGTA	TRANSISTOR	
Q208, 209	DTC114TSTP	TRANSISTOR	
Q210-217	KSC2785YGTA	TRANSISTOR	
Q218-220	DTA143XSTP	TRANSISTOR	
Q303, 304	KSC2785YGTA	TRANSISTOR	
Q307, 308	KSC2785YGTA	TRANSISTOR	
Q309, 310	2SD1450QRSTA	TRANSISTOR	
Q311	DTA114ESTP	TRANSISTOR	
Q313	DTA114ESTP	TRANSISTOR	
Q314, 315	DTA124ESTP	TRANSISTOR	
Q316	DTC114TSTP	TRANSISTOR	
Q317	DTC124EST	TRANSISTOR	
Q320-322	DTA143XSTP	TRANSISTOR	
Q323, 324	2SJ40BCTA	TRANSISTOR	
Q451-454	KSC2785YGTA	TRANSISTOR	
Q455	2SD2037EFTA	TRANSISTOR	
Q501	KSB564ACYGTA	TRANSISTOR	
Q503	2SD2037EFTA	TRANSISTOR	
Q504	KSC2785YGTA	TRANSISTOR	

Ref. No.	Part No.	Part Name & Description	Remarks
Q505	2SD1762EF	TRANSISTOR	
Q506	2SB1357EFTA	TRANSISTOR	
Q507	KSC2785YGTA	TRANSISTOR	
Q508	KSB564ACYGTA	TRANSISTOR	
Q509	KSC2785YGTA	TRANSISTOR	
Q519	2SB1185EF	TRANSISTOR	
Q520	KSD471ACYGTA	TRANSISTOR	
Q521	DTB123YSTP	TRANSISTOR	
Q601, 602	DTA144ESTP	TRANSISTOR	
Q604-612	DTA114ESTP	TRANSISTOR	
Q613, 614	DTC124EST	TRANSISTOR	
Q615	DTC144ESTP	TRANSISTOR	
Q616, 617	KSC2785YGTA	TRANSISTOR	
Q618, 619	DTA143XSTP	TRANSISTOR	
Q701	2SB709S	TRANSISTOR	
Q801, 802	2SK381BCDTA	TRANSISTOR	
Q803, 804	2SC3312R	TRANSISTOR	
Q805, 806	KSC2785YGTA	TRANSISTOR	
Q807, 808	2SD1450QRSTA	TRANSISTOR	
Q810	DTA114YSTP	TRANSISTOR	
Q811	DTA114ESTP	TRANSISTOR	
Q812	DTC124EST	TRANSISTOR	
Q951	DTC144ESTP	TRANSISTOR	
		DIODE(S)	
D1	1SS254TA	DIODE	
D2	1SS254TA	DIODE	
D3	1SS254TA	DIODE	
D12	1SS254TA	DIODE	
D14	MA4062MTA	DIODE	
D171	1SS254TA	DIODE	
D172	RVDMTZ4R7BTA	DIODE	
D173	1SS254TA	DIODE	
D174	MA4030MTA	DIODE	
D201, 202	1SS254TA	DIODE	
D301-319	1SS254TA	DIODE	
D401	MA4056MTA	DIODE	
D402	MA4043M	DIODE	
D403	1SS254TA	DIODE	
D451	MA4082MTA	DIODE	
D502	MA4062MTA	DIODE	
D503-506	1SR35200TB	DIODE	⚠
D507, 508	MA4120	DIODE	
D509	1SS254TA	DIODE	
D510	MA167	DIODE	⚠
D511-514	GP15GLF	DIODE	⚠
D515	1SR35200TB	DIODE	⚠
D516	MA4270	DIODE	
D517	1SR35200TB	DIODE	⚠
D518	MA4300M	DIODE	
D519	1SS254TA	DIODE	

Ref. No.	Part No.	Part Name & Description	Remarks
D520	MA4150M	DIODE	
D521, 522	1SS254TA	DIODE	
D523	MA4051-L	DIODE	
D524-526	1SS254TA	DIODE	
D601, 602	1SS254TA	DIODE	
D603	1SS291TA	DIODE	
D604	1SS254TA	DIODE	
D605	MA4047MTA	DIODE	
D606, 607	MA4062MTA	DIODE	
D701	MA110TW	DIODE	
D821, 822	1SS254TA	DIODE	
D951	1SS291TA	DIODE	
D952-954	1SS254TA	DIODE	
D971	RVD1SS133TA	DIODE	
D971A	RVD1SS133TA	DIODE	
		VARIABLE RESISTOR(S)	
VR1	EVNDCAA03BS3	V. R, FM MPX VCO ADJ.	
VR101	EVNDCAA03B24	V. R, P. B. GAIN ADJ. (DECK1:L)	
VR102	EVNDCAA03B24	V. R, P. B. GAIN ADJ. (DECK1:R)	
VR103	EVNDCAA03B24	V. R, P. B. GAIN ADJ. (DECK2:L)	
VR104	EVNDCAA03B24	V. R, P. B. GAIN ADJ. (DECK2:R)	
VR201	EVNDCAA03B53	V. R, TAPE SPEED ADJ. (DECK1)	
VR202	EVNDCAA03B14	V. R, TAPE SPEED ADJ. (DECK2)	
VR203	EVNDCAA03BS3	V. R, TAPE SPEED ADJ. (DECK2)	
VR601	EVQWPA02224B	V. R, AI JOG	
VR602	EVQWQAF2524B	V. R, MAIN VOLUME	
VR701	EVNDXAA00B14	V. R, BEST EYE	
VR901	EVJ02BF01B13	V. R, MIC VOLUME	
		COMPONENT COMBINATION(S)	
Z1	ENV17281G1	FM FRONT END	
Z2	RLI2Z003M-T	COMPONENT COMBINATION	
Z101-103	EXBF6L306SYV	COMPONENT COMBINATION	
Z901	RCDHC-278	REMOTE SENCER	
		COIL(S)	
L1	ELESNR22MA	COIL	
L2	RLA6Z002M-T	COIL	
L3	RLQZP100KT-Y	COIL	
L4	RLQZPR68KT-Y	COIL	
L5	ELESNR22MA	COIL	
L91	ELEXT1R0KA9	COIL	
L92	SLM1B10M-1M	COIL	
L93, 94	RLM2B003M-K	COIL	
L101, 102	RLM9B002-1M	COIL	
L103, 104	RLM2B005-1M	COIL	
L201	RL08C002M-T	COIL	
L202	RLQZB470KT-D	COIL	

Ref. No.	Part No.	Part Name & Description	Remarks
L501	RLQZ600M-W	COIL	(E/EB/EG/GN) ⚠
L503, 504	SLQY07G-40	COIL	(E/EB/EG/GN)
L601-604	RLQZP4R7KT-Y	COIL	
L605, 606	RLQZP101KT-Y	COIL	
L951	RLQZP3R3KT-Y	COIL	
L953-956	RLQZP2R2KT-Y	COIL	
		TRANSFORMER(S)	
T1	RLI4B012-Z	TRANSFORMER	
T2	RLI4B013-Z	TRANSFORMER	
T501	RTP1M5B007	POWER TRANSFORMER	⚠(E/EB/EG/GN)
T501	RTP1M5C005	POWER TRANSFORMER	⚠(GC)
		FILTER(S)	
CF201	RLFFETNGA01L	CERAMIC FILTER	
CF202	RLFFETNGA02L	CERAMIC FILTER	
		OSCILLATOR(S)	
X1	SVQ49U722-S	OSCILLATOR	
X601, 602	EFOGC6004T4	CERAMIC OSCILLATOR	
X701	RSXZ33M8M01T	OSCILLATOR	
X951	EFOGC4004A4	CERAMIC OSCILLATOR	
X952	RSXD32K7F02	OSCILLATOR	
		DISPLAY(S)	
FL601	RSL0107-F	DISPLAY(MAIN)	
FL602	RSL0106-F	DISPLAY(SPECTRUM ANALYZER)	
		SWITCH(ES)	
S501	SSR187-1	SW, VOLTAGE SELECTOR	⚠(GC)
S701	SSHD5-E	SW, REST	
S790	RSH1A005	SW, LOADING CLOSE DETECT	
S791	RSH1A005	SW, LOADING OPEN DETECT	
S901	EVQ21405R	SW, CD EDIT	
S902	EVQ21405R	SW, TUNING	
S903	EVQ21405R	SW, FM MODE/B.P	
S904	EVQ21405R	SW, DISPLAY	
S905	EVQ21405R	SW, BAND/MW ALLOCATION	
S906	EVQ21405R	SW, CLOCK/TIMER	
S907	EVQ21405R	SW, SET	
S908	EVQ21405R	SW, CANCEL	
S909	EVQ21405R	SW, POWER STANDBY/ON	
S910	EVQ21405R	SW, SLEEP	
S911	EVQ21405R	SW, TAPE	
S912	EVQ21405R	SW, TUNER	
S913	EVQ21405R	SW, PHONO	
S914	EVQ21405R	SW, REC TIMER	

Ref. No.	Part No.	Part Name & Description	Remarks
S915	EVQ21405R	SW, PLAY TIMER	
S916	EVQ21405R	SW, CD	
S917	EVQ21405R	SW, KARAOKE	
S918	EVQ21405R	SW, SURROUND	
S919	EVQ21405R	SW, SUPER BASS	
S920	EVQ21405R	SW, EQ. ON/FLAT. DEMO	
S921	EVQ21405R	SW, EQ. MODE, FIXED/USER	
S922	EVQ21405R	SW, EQ. LEVEL(DOWN)	
S923	EVQ21405R	SW, EQ. LEVEL(UP)	
S924	EVQ21405R	SW, DISPLAY SPECTRAM/MODE	
S925	EVQ21405R	SW, VOL. PRESET	
S926	EVQ21405R	SW, REVERSE MODE	
S927	EVQ21405R	SW, COUNTER RESET	
S928	EVQ21405R	SW, DOLBY NR	
S929	EVQ21405R	SW, REC PAUSE	
S930	EVQ21405R	SW, ONE TOUCH TAPE EDIT(N)	
S931	EVQ21405R	SW, ONE TOUCH TAPE EDIT(H)	
S932	EVQ21405R	SW, STOP(DECK)	
S933	EVQ21405R	SW, TPS(REW) (DECK)	
S934	EVQ21405R	SW, PLAY(REV) (DECK)	
S935	EVQ21405R	SW, PLAY(FWD) (DECK)	
S936	EVQ21405R	SW, TPS(FF) (DECK)	
S937	EVQ21405R	SW, DECK 1/2(DECK)	
S938	EVQ21405R	SW, STOP(CD)	
S939	EVQ21405R	SW, PLAY(CD)	
S940	EVQ21405R	SW, PAUSE(CD)	
S941	EVQ21405R	SW, SKIP(FWD) (CD)	
S942	EVQ21405R	SW, SKIP(REV) (CD)	
S943	EVQ21405R	SW, OPEN/CLOSE(CD)	
S971	RSH1A89Z	SW, MODE(DECK1)	
S971A	RSH1A89Z	SW, MODE(DECK2)	
S972	RSH1A90YB-U	SW, HALF(DECK1)	
S972A	RSH1A90YB-U	SW, HALF(DECK2)	
S973	RSH1A90YB-U	SW, ATS/CrO2(DECK1)	
S973A	RSH1A90YB-U	SW, R. REC. INH(DECK2)	
S974	RSH1A90YB-U	SW, F. REC. INH(DECK2)	
S975	RSH1A90YB-U	SW, ATS/CrO2(DECK2)	
S976	RSH1A90YB-U	SW, ATS/METAL(DECK2)	
		CONNECTOR(S)	
CN101	RJS9T4ZA	SOCKET(9P)	
CN103	RJS9T4ZA	SOCKET(9P)	
CN201, 202	RJS1A1704	SOCKET(4P)	
CN203	RJS7T4ZA	SOCKET(7P)	
CN204, 205	SJSD1005	SOCKET(10P)	
CN206	RJS1A1704	SOCKET(4P)	
CN501, 502	RJU005W012	SOCKET(12P)	
CN505	RJS8T4ZA	SOCKET(8P)	
CN601	SJS50581BB	SOCKET(5P)	
CN603	SJS50581BB	SOCKET(5P)	
CN604	RJU005W012	SOCKET(12P)	

Ref. No.	Part No.	Part Name & Description	Remarks
CN605-607	RJU003K010M1	SOCKET(10P)	
CN702	RJS1A6823	SOCKET(23P)	
CN504A1	RJS1A1705	SOCKET(5P)	
CN504A2	RJS1A1704	SOCKET(4P)	
CN504B1	RJS1A1705	SOCKET(5P)	
CN504B2	RJS1A1704	SOCKET(4P)	
CP101	RJP5G18ZA	CONNECTOR(5P)	
CP102	SJTD413	CONNECTOR(4P)	
CP501, 502	RJT005W012-M	CONNECTOR(12P)	
CP601	SJT30549BB1	CONNECTOR(5P)	
CP603	SJT30549BB1	CONNECTOR(5P)	
CP604	RJT005W012-M	CONNECTOR(12P)	
CP605-607	RJT003K010M1	CONNECTOR(10P)	
CP701, 702	RJP2G17ZA	CONNECTOR(2P)	
CP703	RJP4G17ZA	CONNECTOR(4P)	
CP790A	EMCS0660MT6	CONNECTOR(6P)	
CP790	RJP6G17ZA	CONNECTOR(6P)	
CS701	RJU035T016-1	SOCKET(16P)	
CS702	RJS1A6723-1Q	SOCKET(23P)	
J971	RJS7T7ZA	SOCKET(7P)	
J971A	RJS10T7ZA	SOCKET(10P)	
		EARTH TERMINAL(S)	
E201	SNE1004-1	GND PLATE	
E501	SNE1004-1	GND PLATE	
E901	RSC0231	SHIELD PLATE	
E902	RSC0229	SHIELD PLATE	
E903	RSC0230	SHIELD PLATE	
		FUSE HOLDER(S)	
FC1, 2	EYF52BC	FUSE HOLDER	
FC3, 4	EYF52BC	FUSE HOLDER	(GC)
		RELAY(S)	
RLY501	RSY0007M-C	RELAY	⚠
		FUSE(S)	
F1	XBA2C08TB0	FUSE, 250V T800mA	⚠
F2	XBA2C20TB0	FUSE, 250V T2A	⚠(GC)
		JACK(S)	
JK101	RJH4202M	ANTENNA TERMINAL	(E/EB/EG)
JK101	RJH4405-1	ANTENNA TERMINAL	(GC/GN)
JK271	RJJ1D25ZA-C	MIC JACK	
JK301	SJF3069-5N	PHONO/REC. OUT JACK	
JK501	RJR0054M	SPEAKER TERMINAL	
JK502	SJF3068-6N	SURROUND TERMINAL	

Ref. No.	Part No.	Part Name & Description	Remarks
JK503	SJS9236	AC INLET	⚠(E/EB/EG/GC)
JK503	SJSD16	AC INLET	⚠(GN)
JK521	RJJD7S2YA-C	HEADPHONES JACK	

Notes : * Capacity valuse are in microfarads (uF) unless specified otherwise, P=Pico-farads(pF) F=Farads(F)
* Resistance values are in ohms, unless specified otherwise, 1K=1,000(OHM) , 1M=1,000k(OHM)

Ref. No.	Part No.	Values & Remarks
		RESISTORS
R3	ERDS2TJ562	1/4W 5.6K
R4	ERDS2TJ103	1/4W 10K
R5	ERDS2TJ6R8	1/4W 6.8
R6	ERDS2TJ561	1/4W 560
R7	ERDS2TJ471	1/4W 470
R8	ERDS2TJ102	1/4W 1K
R11	ERDS2TJ332	1/4W 3.3K
R12	ERDS2TJ471	1/4W 470
R13	ERDS2TJ824	1/4W 820K
R14, 15	ERDS2TJ331	1/4W 330
R16	ERDS2TJ474	1/4W 470K
R18, 19	ERDS2TJ102	1/4W 1K
R20	ERDS2TJ104	1/4W 100K
R21	ERDS2TJ122	1/4W 1.2K
R23	ERDS2TJ103	1/4W 10K
R27, 28	ERDS2TJ332	1/4W 3.3K
R29	ERDS2TJ560T	1/4W 56
R30	ERDS2TJ561	1/4W 560
R31	ERDS2TJ822	1/4W 8.2K
R36	ERDS2TJ103	1/4W 10K
R37	ERDS2TJ102	1/4W 1K
R38	ERDS2TJ821	1/4W 820
R39	ERDS2TJ103	1/4W 10K
R41, 42	ERDS2TJ562	1/4W 5.6K
R45, 46	ERDS2TJ274	1/4W 270K E/EG/GC/GN
R45, 46	ERDS2TJ684T	1/4W 680K (EG)
R47	ERDS2TJ332	1/4W 3.3K
R48-50	ERDS2TJ222	1/4W 2.2K
R51	ERDS2TJ102	1/4W 1K
R52-54	ERDS2TJ103	1/4W 10K
R56	ERDS2TJ103	1/4W 10K
R62	ERDS2TJ101	1/4W 100
R63	ERDS2TJ102	1/4W 1K
R64 ⚠	ERDS1FJ330	1/2W 33
R66 ⚠	ERDS1FVJ4R7T	1/2W 4.7
R69, 70	ERDS2TJ272T	1/4W 2.7K
R71, 72	ERDS2TJ182	1/4W 1.8K E/EB/GC/GN
R71, 72	ERDS2TJ102T	1/4W 1K (EG)
R81	ERDS2TJ103	1/4W 10K
R83	ERDS2TJ182	1/4W 1.8K
R84	ERDS2TJ223	1/4W 22K
R85	ERDS2TJ103	1/4W 10K
R86	ERDS2TJ102	1/4W 1K
R87, 88	ERDS2TJ122	1/4W 1.2K
R89	ERDS2TJ684	1/4W 680K
R90	ERDS2TJ102	1/4W 1K

Ref. No.	Part No.	Values & Remarks
R91	ERDS2TJ104	1/4W 100K
R92	ERDS2TJ152	1/4W 1.5K
R93	ERDS2TJ183T	1/4W 18K
R94	ERDS2TJ222	1/4W 2.2K
R95	ERDS2TJ103	1/4W 10K
R101	ERDS2TJ334	1/4W 330K
R102	ERDS2TJ104	1/4W 100K
R103, 104	ERDS2TJ123	1/4W 12K
R105	ERDS2TJ181T	1/4W 180
R106	ERDS2TJ102	1/4W 1K
R107, 108	ERDS2TJ330	1/4W 33
R109, 110	ERDS2TJ392T	1/4W 3.9K
R111, 112	ERDS2TJ222	1/4W 2.2K
R113, 114	ERDS2TJ122	1/4W 1.2K
R115, 116	ERDS2TJ225	1/4W 2.2M
R117, 118	ERDS2TJ105T	1/4W 1M
R119, 120	ERDS2TJ104	1/4W 100K
R121, 122	ERDS2TJ154	1/4W 150K
R123, 124	ERDS2TJ473	1/4W 47K
R125, 126	ERDS2TJ472	1/4W 4.7K
R127, 128	ERDS2TJ332	1/4W 3.3K
R129, 130	ERDS2TJ682T	1/4W 6.8K
R131	ERDS2TJ823T	1/4W 82K
R132	ERDS2TJ335T	1/4W 3.3M
R133	ERDS2TJ332	1/4W 3.3K
R134	ERDS2TJ474	1/4W 470K
R135, 136	ERDS2TJ272T	1/4W 2.7K
R137-139	ERDS2TJ103	1/4W 10K
R141, 142	ERDS2TJ682T	1/4W 6.8K
R143, 144	ERDS2TJ222	1/4W 2.2K
R145, 146	ERDS2TJ103	1/4W 10K
R151, 152	ERDS2TJ105T	1/4W 1M
R153, 154	ERDS2TJ102	1/4W 1K
R155, 156	ERDS2TJ471	1/4W 470
R158	ERDS2TJ101	1/4W 100
R159, 160	ERDS2TJ222	1/4W 2.2K
R161, 162	ERDS2TJ472	1/4W 4.7K
R163	ERDS2TJ433	1/4W 43K
R169, 170	ERDS2TJ102	1/4W 1K
R171 ⚠	ERD2FCVG120T	1/4W 12
R172	ERDS2TJ331	1/4W 330
R173	ERDS2TJ103	1/4W 10K
R174, 175	ERDS2TJ472	1/4W 4.7K
R176	ERDS2TJ822	1/4W 8.2K
R177	ERDS2TJ103	1/4W 10K
R178	ERDS2TJ1R2	1/4W 1.2
R179, 180	ERDS2TJ472	1/4W 4.7K
R181	ERDS2TJ332	1/4W 3.3K
R182	ERDS2TJ1R0	1/4W 1.0

Ref. No.	Part No.	Values & Remarks
R183-185	ERDS2TJ104	1/4W 100K
R186	ERDS2TJ102	1/4W 1K
R200	ERDS2TJ221	1/4W 220
R201	ERDS2TJ2R7T	1/4W 2.7
R202, 203	ERDS2TJ123	1/4W 12K
R204	ERDS2TJ182	1/4W 1.8K
R205	ERDS2TJ334	1/4W 330K
R206	ERDS2TJ221	1/4W 220
R207	ERDS2TJ2R7T	1/4W 2.7
R208	ERDS2TJ682T	1/4W 6.8K
R209	ERDS2TJ183T	1/4W 18K
R210	ERDS2TJ123	1/4W 12K
R211	ERDS2TJ334	1/4W 330K
R212	ERDS2TJ123	1/4W 12K
R213	ERDS2TJ152	1/4W 1.5K
R214, 215	ERDS2TJ472	1/4W 4.7K
R216-218	ERDS2TJ473	1/4W 47K
R219	ERDS2TJ103	1/4W 10K
R220	ERDS2TJ472	1/4W 4.7K
R221	ERDS2TJ2R7T	1/4W 2.7
R222	ERDS2TJ473	1/4W 47K
R223	ERDS2TJ472	1/4W 4.7K
R224	ERDS2TJ103	1/4W 10K
R225	ERDS2TJ2R7T	1/4W 2.7
R226, 227	ERDS2TJ102	1/4W 1K
R228	ERDS2TJ472	1/4W 4.7K
R229	ERDS2TJ103	1/4W 10K
R230, 231	ERDS2TJ472	1/4W 4.7K
R232, 233	ERDS2TJ222	1/4W 2.2K
R234	ERDS2TJ472	1/4W 4.7K
R235, 236	ERDS2TJ104	1/4W 100K
R237	ERDS2TJ100	1/4W 10
R239-242	ERDS2TJ272T	1/4W 2.7K
R271	ERDS2TJ473	1/4W 47K
R272	ERDS2TJ102	1/4W 1K
R301, 302	ERDS2TJ123	1/4W 12K
R303, 304	ERDS2TJ183T	1/4W 18K
R305, 306	ERDS2TJ561	1/4W 560
R307	ERDS2TJ474	1/4W 470K
R309-311	ERDS2TJ122	1/4W 1.2K
R312	ERDS2EJ121	1/4W 120
R313, 314	ERDS2TJ122	1/4W 1.2K
R315, 316	ERDS2TJ102	1/4W 1K
R317, 318	ERDS2TJ563	1/4W 56K
R319, 320	ERDS2TJ123	1/4W 12K
R321, 322	ERDS2TJ104	1/4W 100K
R323, 324	ERDS2TJ102	1/4W 1K
R325, 326	ERDS2TJ222	1/4W 2.2K
R327, 328	ERDS2TJ223	1/4W 22K

Ref. No.	Part No.	Values & Remarks
R329, 330	ERDS2TJ563	1/4W 56K
R331, 332	ERDS2TJ562	1/4W 5.6K
R333, 334	ERDS2TJ223	1/4W 22K
R335, 336	ERDS2TJ102	1/4W 1K
R337, 338	ERDS2TJ472	1/4W 4.7K
R339	ERDS2TJ331	1/4W 330
R341-344	ERDS2TJ103	1/4W 10K
R345, 346	ERDS2TJ273	1/4W 27K
R347	ERDS2TJ394	1/4W 390K
R348	ERDS2TJ393	1/4W 39K
R349	ERDS2TJ224T	1/4W 220K
R350	ERDS2TJ223	1/4W 22K
R353-355	ERDS2TJ223	1/4W 22K
R356	ERDS2TJ152	1/4W 1.5K
R357	ERDS2TJ103	1/4W 10K
R359	ERDS2TJ102	1/4W 1K
R361	ERDS2TJ105T	1/4W 1M
R362	ERDS2TJ104	1/4W 100K
R363	ERDS2TJ332	1/4W 3.3K
R364	ERDS2TJ393	1/4W 39K
R365, 366	ERDS2TJ223	1/4W 22K
R367, 368	ERDS2TJ153	1/4W 15K
R369, 370	ERDS2TJ223	1/4W 22K
R371, 372	ERDS2TJ102	1/4W 1K
R373-379	ERDS2TJ103	1/4W 10K
R380	ERDS2TJ104	1/4W 100K
R381-383	ERDS2TJ103	1/4W 10K
R384	ERDS2TJ472	1/4W 4.7K
R389	ERDS2TJ103	1/4W 10K
R390	ERDS2TJ272T	1/4W 2.7K
R391	ERDS2TJ332	1/4W 3.3K
R392-395	ERDS2TJ103	1/4W 10K
R396	ERDS2TJ122	1/4W 1.2K
R397, 398	ERDS2TJ102	1/4W 1K
R399	ERDS2TJ122	1/4W 1.2K
R401, 402	ERDS2TJ123	1/4W 12K
R403, 404	ERDS2TJ223	1/4W 22K
R405-408	ERDS2TJ822	1/4W 8.2K
R409-424	ERDS2TJ224T	1/4W 220K
R425, 426	ERDS2TJ102	1/4W 1K
R427, 428	ERDS2TJ823T	1/4W 82K
R429, 430	ERDS2TJ104	1/4W 100K
R451, 452	ERDS2TJ183T	1/4W 18K
R453, 454	ERDS2TJ102	1/4W 1K
R455, 456	ERDS2TJ222	1/4W 2.2K
R457, 458	ERDS2TJ821	1/4W 820
R459, 460	ERDS2TJ102	1/4W 1K
R462	ERDS2TJ472	1/4W 4.7K
R463-465	ERDS2TJ104	1/4W 100K
R466	ERG1SJ100E	1W 10
R467	ERDS2TJ681	1/4W 680
R501, 502	ERDS2TJ102	1/4W 1K

Ref. No.	Part No.	Values & Remarks
R503, 504	ERDS2TJ103	1/4W 10K
R505-508	ERDS2TJ104	1/4W 100K
R509 ⚠	ERD25FJ470	1/4W 47
R511	ERDS2TJ563	1/4W 56K
R512	ERDS2TJ103	1/4W 10K
R515, 516⚠	ERDS1FVJ100T	1/2W 10
R518	ERDS2TJ102	1/4W 1K
R519, 520	ERDS2TJ221	1/4W 220
R523	ERDS2TJ152	1/4W 1.5K
R523A	ERDS2TJ181T	1/4W 180
R524A	ERDS2TJ181T	1/4W 180
R524	ERQ12AJ560E	1/2W 56
R525A	ERDS2TJ181T	1/4W 180
R525	ERQ12AJ2R2E	1/2W 2.2
R526	ERDS2TJ151	1/4W 150
R526A	ERDS2TJ181T	1/4W 180
R527 ⚠	ERDS1FVJ182T	1/2W 1.8K
R528 ⚠	ERDS1FVJ390T	1/2W 39
R529	ERDS2TJ151	1/4W 150
R530	ERDS2TJ122	1/4W 1.2K
R531	ERDS2TJ102	1/4W 1K
R532	ERDS2TJ823T	1/4W 82K
R533	ERDS2TJ563	1/4W 56K
R534	ERDS2TJ222	1/4W 2.2K
R535 ⚠	ERDS1FVJ181T	1/2W 180
R536, 537	ERDS2TJ562	1/4W 5.6K
R538 ⚠	ERD2FCVJ8R2T	1/4W 8.2
R539, 540	ERDS2TJ472	1/4W 4.7K
R541, 542	ERDS2TJ152	1/4W 1.5K
R543 ⚠	ERD2FCVJ8R2T	1/4W 8.2
R544 ⚠	ERD2FCVJ4R7T	1/4W 4.7
R545	ERDS2TJ822	1/4W 8.2K
R551	ERDS2TJ102	1/4W 1K
R552	ERDS2TJ123	1/4W 12K
R553	ERDS2TJ681	1/4W 680
R554	ERDS2TJ154	1/4W 150K
R555	ERDS2TJ101	1/4W 100
R556	ERDS2TJ103	1/4W 10K
R557	ERDS2TJ122	1/4W 1.2K
R558	ERDS2TJ680T	1/4W 68
R559	ERQ16NKWR10E	1W 0.1
R560	ERDS2TJ181T	1/4W 180
R561	ERG1SJ470E	1W 47
R562	ERQ12AJ470E	1/2W 47
R563 ⚠	ERDS1FVJ2R2T	1/2W 2.2
R565, 566	ERDS2TJ100	1/4W 10 E/EB/EG/GN
R601, 602	ERDS2TJ104	1/4W 100K
R603	ERDS2TJ102	1/4W 1K
R604	ERDS2TJ2R7T	1/4W 2.7
R605	ERDS2TJ105T	1/4W 1M
R606	ERDS2TJ102	1/4W 1K
R607	ERDS2TJ224T	1/4W 220K

Ref. No.	Part No.	Values & Remarks
R608-618	ERDS2TJ104	1/4W 100K
R619	ERDS2TJ103	1/4W 10K
R620, 621	ERDS2TJ101	1/4W 100
R622, 623	ERDS2TJ103	1/4W 10K
R624	ERDS2TJ105T	1/4W 1M
R625	ERDS2TJ102	1/4W 1K
R626	ERDS2TJ103	1/4W 10K
R627	ERDS2TJ224T	1/4W 220K
R628, 629	ERDS2TJ473	1/4W 47K
R630	ERDS2TJ104	1/4W 100K
R631	ERDS2TJ103	1/4W 10K
R632	ERDS2TJ682T	1/4W 6.8K
R633, 634	ERDS2TJ103	1/4W 10K
R635	ERDS2TJ225	1/4W 2.2M
R636-642	ERDS2TJ122	1/4W 1.2K
R643	ERDS2TJ104	1/4W 100K
R644	ERDS2TJ220T	1/4W 22
R645	ERDS2TJ271	1/4W 270
R646	ERDS2TJ152	1/4W 1.5K
R647	ERDS2TJ471	1/4W 470
R648	ERDS2TJ822	1/4W 8.2K
R649, 650	ERDS2TJ103	1/4W 10K
R652	ERDS2TJ220T	1/4W 22
R653	ERDS2TJ271	1/4W 270
R654, 655	ERDS2TJ103	1/4W 10K
R656	ERDS2TJ822	1/4W 8.2K
R657, 658	ERDS2TJ103	1/4W 10K
R659	ERDS2TJ822	1/4W 8.2K
R660-664	ERDS2TJ102	1/4W 1K
R701	ERJ6GEYJ100	1/10W 10
R702	ERJ6GEYJ471V	1/10W 470
R703	ERJ6GEYJ102A	1/10W 1K
R704	ERJ6GEYJ103V	1/10W 10K
R706	ERJ6GEYJ473V	1/10W 47K
R707	ERJ6GEYJ222V	1/10W 2.2K
R708	ERJ6GEYJ683V	1/10W 68K
R709	ERJ6GEYJ122V	1/10W 1.2K
R710	ERJ6GEYJ182V	1/10W 1.8K
R711	ERJ6GEYJ473V	1/10W 47K
R712	ERJ6GEYJ471V	1/10W 470
R714	ERJ6GEYJ473V	1/10W 47K
R715	ERJ6GEYJ223V	1/10W 22K
R716	ERJ6GEYJ104V	1/10W 100K
R717	ERJ6GEYJ682V	1/10W 6.8K
R718	ERJ6GEYJ223V	1/10W 22K
R719	ERJ6GEYJ123V	1/10W 12K
R720	ERJ6GEYJ273V	1/10W 27K
R721	ERJ6GEYJ823	1/10W 82K
R722	ERJ6GEYJ102A	1/10W 1K
R723, 724	ERJ6GEYJ104V	1/10W 100K
R725	ERJ6GEYJ471V	1/10W 470
R726	ERJ6GEYJ102A	1/10W 1K

Ref. No.	Part No.	Values & Remarks
R729, 730	ERJ6GEYJ102A	1/10W 1K
R731	ERJ8GEYJ470V	1/8W 47
R732	ERJ6GEYJ562V	1/10W 5.6K
R733	ERJ6GEYJ332V	1/10W 3.3K
R734	ERJ6GEYJ562V	1/10W 5.6K
R735	ERJ6GEYJ222V	1/10W 2.2K
R736	ERJ6GEYJ682V	1/10W 6.8K
R737-739	ERJ6GEYJ562V	1/10W 5.6K
R741-743	ERJ6GEYJ102A	1/10W 1K
R744	ERJ6GEYJ393V	1/10W 39K
R745, 746	ERJ6GEYJ102A	1/10W 1K
R747	ERJ6GEYJ473V	1/10W 47K
R748	ERJ8GEYJ180V	1/8W 18
R749	ERJ6GEYJ101V	1/10W 100
R801, 802	ERDS2TJ472	1/4W 4.7K
R803, 804	ERDS2TJ392T	1/4W 3.9K
R805, 806	ERDS2TJ103	1/4W 10K
R807, 808	ERDS2TJ153	1/4W 15K
R809, 810	ERDS2TJ224T	1/4W 220K
R815, 816	ERDS2TJ202T	1/4W 2K
R817, 818	ERDS2TJ683	1/4W 68K
R819, 820	ERDS2TJ682T	1/4W 6.8K
R821	ERDS2TJ105T	1/4W 1M
R823	ERDS2TJ474	1/4W 470K
R824	ERDS2TJ102	1/4W 1K
R825, 826	ERDS2TJ472	1/4W 4.7K
R827, 828	ERDS2TJ152	1/4W 1.5K
R829, 830	ERDS2TJ473	1/4W 47K
R831, 832	ERDS2TJ102	1/4W 1K
R833	ERDS2TJ105T	1/4W 1M
R834	ERDS2TJ334	1/4W 330K
R835, 836	ERDS2TJ222	1/4W 2.2K
R837	ERDS2TJ105T	1/4W 1M
R838	ERDS2TJ334	1/4W 330K
R839	ERDS2TJ152	1/4W 1.5K
R840	ERDS2TJ472	1/4W 4.7K
R841	ERDS2TJ103	1/4W 10K
R842	ERDS2TJ473	1/4W 47K
R861-864	ERDS2TJ331	1/4W 330
R865, 866	ERDS2TJ473	1/4W 47K
R867, 868	ERDS2TJ271	1/4W 270
R869, 870	ERDS2TJ680T	1/4W 68
R871, 872	ERDS2TJ184T	1/4W 180K
R873, 874	ERDS2TJ123	1/4W 12K
R875, 876	ERDS2TJ224T	1/4W 220K
R901	ERDS2TJ102	1/4W 1K
R902	ERDS2TJ222	1/4W 2.2K
R903	ERDS2TJ182	1/4W 1.8K
R904	ERDS2TJ222	1/4W 2.2K
R905, 906	ERDS2TJ102	1/4W 1K
R907	ERDS2TJ122	1/4W 1.2K
R908	ERDS2TJ182	1/4W 1.8K

Ref. No.	Part No.	Values & Remarks
R909	ERDS2TJ222	1/4W 2.2K
R910	ERDS2TJ272T	1/4W 2.7K
R911	ERDS2TJ472	1/4W 4.7K
R912	ERDS2TJ682T	1/4W 6.8K
R913	ERDS2TJ103	1/4W 10K
R914	ERDS2TJ223	1/4W 22K
R915	ERDS2TJ683	1/4W 68K
R916	ERDS2TJ222	1/4W 2.2K
R917	ERDS2TJ152	1/4W 1.5K
R918	ERDS2TJ182	1/4W 1.8K
R919	ERDS2TJ222	1/4W 2.2K
R920	ERDS2TJ332	1/4W 3.3K
R921	ERDS2TJ472	1/4W 4.7K
R922	ERDS2TJ682T	1/4W 6.8K
R923	ERDS2TJ123	1/4W 12K
R924	ERDS2TJ333	1/4W 33K
R925, 926	ERDS2TJ102	1/4W 1K
R927	ERDS2TJ122	1/4W 1.2K
R928	ERDS2TJ182	1/4W 1.8K
R929	ERDS2TJ222	1/4W 2.2K
R930	ERDS2TJ272T	1/4W 2.7K
R931	ERDS2TJ472	1/4W 4.7K
R932	ERDS2TJ682T	1/4W 6.8K
R933	ERDS2TJ103	1/4W 10K
R934	ERDS2TJ223	1/4W 22K
R935	ERDS2TJ683	1/4W 68K
R936, 937	ERDS2TJ102	1/4W 1K
R938	ERDS2TJ122	1/4W 1.2K
R939	ERDS2TJ182	1/4W 1.8K
R940	ERDS2TJ222	1/4W 2.2K
R951	ERDS2TJ103	1/4W 10K
R952, 953	ERDS2TJ104	1/4W 100K
R954	ERDS2TJ823T	1/4W 82K
R955	ERDS2TJ102	1/4W 1K
R956	ERDS2TJ331	1/4W 330
R958	ERDS2TJ224T	1/4W 220K
R959	ERDS2TJ473	1/4W 47K
R960	ERDS2TJ102	1/4W 1K
R961, 962	ERDS2TJ104	1/4W 100K
R963, 964	ERDS2TJ474	1/4W 470K
R965	ERDS2TJ473	1/4W 47K
R966, 967	ERDS2TJ472	1/4W 4.7K
R968	ERDS2TJ473	1/4W 47K
R970	ERDS2TJ472	1/4W 4.7K
R971	ERDS2TJ104	1/4W 100K
R972	ERDS2TJ103	1/4W 10K
R973	ERDS2TJ224T	1/4W 220K
R974	ERDS2TJ103	1/4W 10K
R975	ERDS2TJ102T	1/4W 1K (GC)
R981-984	ERDS2TJ102	1/4W 1K
R985-988	ERDS2TJ103	1/4W 10K
R989-995	ERDS2TJ104	1/4W 100K

Ref. No.	Part No.	Values & Remarks
R996	ERDS2TJ561	1/4W 560
R997, 998	ERDS2TJ104	1/4W 100K
		CAPACITORS
C2	ECBT1E103ZF	25V 0.01U
C3	ECEA1VKA330B	35V 33U
C4	ECEA1EKA4R7B	25V 4.7U
C5	ECA1CM471B	16V 470U
C6	ECBT1E103ZF	25V 0.01U
C7	ECBT1H102KB5	50V 1000P
C8	ECBT1H102KB5	50V 1000P
C9	ECQB1H473JF3	50V 0.047U
C10	ECBT1H8R2KC5	50V 8.2P
C11	ECBT1H180JC5	50V 18P
C12	ECEA1CKA100B	16V 10U
C13	ECBT1H104ZF5	50V 0.1U
C14	ECBT1E223ZF	25V 0.022U
C15	ECEA0JKA101B	6.3V 100U
C16	ECEA1HKA3R3B	50V 3.3U
C17-19	ECBT1C103KS5	16V 0.01U
C20	ECBT1H150JC5	50V 15P
C21	ECCR1H680JS5	50V 68P
C22	ECBT1E223ZF	25V 0.022U
C23	ECBT1H101KB5	50V 100P
C24	ECEA1CKA100B	16V 10U
C25	ECBT1E103ZF	25V 0.01U
C26	ECEA1HKA3R3B	50V 3.3U
C27, 28	ECBT1H150JC5	50V 15P
C29	ECBT1H102KB5	50V 1000P
C30	ECEA1AKA101B	10V 100U
C34	ECEA1CKA100B	16V 10U
C35	ECEA1AKA470B	10V 47U
C36	ECQG1H102KZT	50V 1000P
C37	ECEA1HKAR47B	50V 0.47U
C38	ECEA1HKAR33B	50V 0.33U
C39	ECBT1C103KS5	16V 0.01U
C40	ECEA1HKA010B	50V 1U
C41, 42	ECFR1E123KR	25V 0.012U
C43, 44	ECEA1CKA100B	16V 10U
C45	ECBT1H102KB5	50V 1000P
C50, 51	ECBT1H102KB5	50V 1000P
C53	ECBT1H102KB5	50V 1000P
C56	ECBT1C103KS5	16V 0.01U
C57	ECEA1AKA101B	10V 100U
C58	ECBT1H102KB5	50V 1000P
C61	ECEA1CKA220B	16V 22U
C81	ECBT1H101KB5	50V 100P
C83	ECBT1C103KS5	16V 0.01U
C90	ECBT1H3R3KC5	50V 3.3P
C91	ECCR1H820JS5	50V 82P
C92	ECBT1H471KB5	50V 470P

Ref. No.	Part No.	Values & Remarks
C93, 94	ECFR1E392KR	25V 3900P
C101, 102	ECBT1H102KB5	50V 1000P
C103	ECBA1H681KB5	50V 680P
C104	ECFR1C223MR	16V 0.022U
C105, 106	ECBT1H471KB5	50V 470P
C107	ECBA1H681KB5	50V 680P
C108	ECEA1AKA330B	10V 33U
C109	ECEA1AKA101B	10V 100U
C111, 112	ECBT1H471KB5	50V 470P
C113, 114	ECEA0JKA221B	6.3V 220U
C115, 116	ECFR1C333JR	16V 0.033U
C117, 118	ECEA1HKA010B	50V 1U
C119, 120	ECEA1EKA4R7B	25V 4.7U
C121, 122	ECEA1HKA010B	50V 1U
C123, 124	ECBT1H102KB5	50V 1000P
C125, 126	ECFR1E104KR	25V 0.1U
C127, 128	ECBT1C332KR5	16V 3300P
C129, 130	ECBT1H151KB5	50V 150P
C131, 132	ECBT1H221KB5	50V 220P
C133, 134	ECEA1EKA4R7B	25V 4.7U
C135, 136	ECBT1H102KB5	50V 1000P
C137, 138	ECFR1C183KR	16V 0.018U
C139	ECEA1HKA2R2B	50V 2.2U
C140	ECEA1CKA100B	16V 10U
C141	ECEA1HKA0R1B	50V 0.1U
C142	ECFR1C223MR	16V 0.022U
C143, 144	ECEA1HKA010B	50V 1U
C145, 146	ECEA1CKA100B	16V 10U
C150	ECEA0JKA470B	6.3V 47U
C151, 152	ECEA1HKA010B	50V 1U
C153, 154	ECBT1H331KB5	50V 330P
C155, 156	ECEA1CKA100B	16V 10U
C157, 158	ECBA1H681KB5	50V 680P
C159, 160	ECBT1C682KR5	16V 6800P
C161	ECEA1CKA101B	16V 100U
C162	ECA0JM471B	6.3V 470U
C163, 164	ECEA1HKA010B	50V 1U
C165, 166	ECEA1CKA100B	16V 10U
C167, 168	ECEA50ZR68	50V 0.68U
C169, 170	ECEA1EKA4R7B	25V 4.7U
C171	ECEA0JKA470B	6.3V 47U
C173	ECBT1C103MS5	16V 0.01U
C174	ECEA1HKA010B	50V 1U
C175	ECEA1CKA101B	16V 100U
C176	ECQV1H473JZ3	50V 0.047U
C177, 178	ECBT1H102KB5	50V 1000P
C179, 180	ECFR1C103KR	16V 0.01U
C181	ECBT1C103MS5	16V 0.01U
C182	ECEA0JKA470B	6.3V 47U
C183	ECQV1H474JZ3	50V 0.47U
C184	ECQP2A152JZT	100V 1500P
C185	ECQP2E472JZT	250V 4700P

Ref. No.	Part No.	Values & Remarks
C186	ECEA0JKA470B	6.3V 47U
C187, 188	ECBT1H101KB5	50V 100P
C189	ECQP2A222JZT	100V 2200P
C190	ECBT1C103MS5	16V 0.01U
C201	ECEA1CKA101B	16V 100U
C202	ECBT1H104ZF5	50V 0.1U
C271	ECBT1H102KB5	50V 1000P
C300	ECBT1H104ZF5	50V 0.1U
C301	ECBT1H102KB5	50V 1000P
C302, 303	ECBT1H104ZF5	50V 0.1U
C304	ECBT1E103ZF	25V 0.01U
C305-308	ECEA1HKA3R3B	50V 3.3U
C309, 310	ECBT1E103ZF	25V 0.01U
C311	ECFR1C123MR	16V 0.012U
C312	ECFR1C683KR	16V 0.068U
C313	ECFR1C823MR	16V 0.082U
C314	ECEA1HKA3R3B	50V 3.3U
C315, 316	ECBT1H3R3KC5	50V 3.3P
C319, 320	ECBT1E103ZF	25V 0.01U
C321	ECBT1C103KS5	16V 0.01U
C322	ECBT1H102KB5	50V 1000P
C323	ECBT1H330J5	50V 33P
C324	ECBT1H102KB5	50V 1000P
C325	ECA1AM471B	10V 470U
C326	ECBT1C103KS5	16V 0.01U
C327, 328	ECBT1H102KB5	50V 1000P
C329	ECEA1HKA010B	50V 1U
C330	ECBT1E103ZF	25V 0.01U
C331, 332	ECEA1HKA3R3B	50V 3.3U
C334, 335	ECBT1C472KR5	16V 4700P
C337	ECBT1H104ZF5	50V 0.1U
C338	ECBT1H102KB5	50V 1000P
C339	ECBT1C103KS5	16V 0.01U
C340	ECEA1CKA100B	16V 10U
C341, 342	ECEA1HKA010B	50V 1U
C343	ECEA1EKA100B	25V 10U
C344	ECBT1H561KB5	50V 560P
C345	ECBT1H101KB5	50V 100P
C403, 404	ECBT1H391KB5	50V 390P
C405-408	ECEA1HKA3R3B	50V 3.3U
C409, 410	ECEA1CKA220B	16V 22U
C411-416	ECBT1E103ZF	25V 0.01U
C417, 418	ECEA1CKA220B	16V 22U
C419, 420	ECEA1HKA010B	50V 1U
C421, 422	ECEA1HKAR22B	50V 0.22U
C423, 424	ECEA1HKAR33B	50V 0.33U
C425, 426	ECEA1HKA0R1B	50V 0.1U
C427, 428	ECEA1HKAR15B	50V 0.15U
C429, 430	ECFR1C333KR	16V 0.033U
C431, 432	ECQB1H683JF3	50V 0.068U
C433, 434	ECFR1C153KR	16V 0.015U
C435, 436	ECFR1C273JR	16V 0.027U

Ref. No.	Part No.	Values & Remarks
C437, 438	ECBT1C562KR5	16V 5600P
C439, 440	ECBT1C103KS5	16V 0.01U
C441, 442	ECBT1C222KR5	16V 2200P
C443, 444	ECBT1C472KR5	16V 4700P
C445, 446	ECBT1C122KR5	16V 1200P
C449	ECBT1E103ZF	25V 0.01U
C450	ECEA1AKA470B	10V 47U
C451, 452	ECBT1C103KS5	16V 0.01U
C453	ECBT1E103ZF	25V 0.01U
C454	ECEA1CKA101B	16V 100U
C503, 504	ECBT1H331KB5	50V 330P
C505, 506	ECBT1H821KB5	50V 820P
C507, 508	ECBT1H150J5	50V 15P
C509	ECEA0JKA470B	6.3V 47U
C510	ECEA1CKA100B	16V 10U
C511, 512	ECKT1H223ZF	50V 0.022U
C513, 514	ECEA1HKAR68B	50V 0.68U
C515	ECBT1E223ZF	25V 0.022U
C520, 521	ECEA1CKA101B	16V 100U
C522, 523	ECEA0JKA101B	6.3V 100U
C524, 525	ECEA1EKA4R7B	25V 4.7U
C528	ECEA1AKA101B	10V 100U
C529	ECKR1H103ZF5	50V 0.01U
C530	ECEA1HU222B	50V 2200U E/EB/EG/GN
C530	ECEA1VU332B	35V 3300U (GC)
C531-534	ECKR1H103ZF5	50V 0.01U
C535	ECEA1CKA101B	16V 100U
C536	ECBT1E103ZF	25V 0.01U
C537	ECEA1CKA101B	16V 100U
C538, 539	ECKR1H103ZF5	50V 0.01U
C540	ECEA1HKA2R2B	50V 2.2U
C541, 542	ECEA1HU222B	50V 2200U E/EB/EG/GN
C541, 542	ECA1HM332B	50V 3300U (GC)
C543	ECQE2104KF3	250V 0.1U
C544	ECA1HM470B	50V 47U
C545	ECKR1H103ZF5	50V 0.01U
C546	ECA1HM101B	50V 100U
C547	ECEA1HKA220B	50V 22U
C548	ECBT1E103ZF	25V 0.01U
C549	ECA1HM101B	50V 100U
C551, 552	ECBT1E103ZF	25V 0.01U
C553	ECEA1HKA3R3B	50V 3.3U
C554, 555	ECBT1H101KB5	50V 100P
C556	ECEA1HKAR47B	50V 0.47U
C557	ECEA1CKA220B	16V 22U
C558	ECEA1HKA010B	50V 1U
C563-567	ECBT1H102KB5	50V 1000P E/EB/EG/GN
C601	ECEA1AKA220B	10V 22U
C602	ECBT1E223ZF	25V 0.022U
C604	ECBT1E223ZF	25V 0.022U
C605, 606	ECEA1HKA3R3B	50V 3.3U
C607	ECEA1HKA010B	50V 1U

Ref. No.	Part No.	Values & Remarks
C608	ECEA1HKA3R3B	50V 3.3U
C611	ECBT1E103ZF	25V 0.01U
C612	ECEA1AKA220B	10V 22U
C613	ECBT1E103ZF	25V 0.01U
C614	ECA0JM471B	6.3V 470U
C615	ECBT1E103ZF	25V 0.01U
C616	ECEA1HKA3R3B	50V 3.3U
C617-620	ECEA1HKA010B	50V 1U
C621, 622	ECFR1C683KR	16V 0.068U
C623, 624	ECBT1E103ZF	25V 0.01U
C625	ECEA1AKA330B	10V 33U
C626	ECBT1H102KB5	50V 1000P
C627	ECEA1HKA010B	50V 1U
C629	ECEA1AKA330B	10V 33U
C630	ECBT1H102KB5	50V 1000P
C631	ECEA1CKA100B	16V 10U
C632	ECBT1H102KB5	50V 1000P
C633	ECBT1H101KB5	50V 100P
C635	ECEA1HKA010B	50V 1U
C701	ECEA0JKA220	6.3V 22U
C702	ECEA0JKS470	6.3V 47U
C703	ECEA0JKS101I	6.3V 100U
C709	ECUZ1C224KBM	16V 0.22U
C710	ECUZ1C104MBM	16V 0.1U
C711	ECUW1E103MBN	25V 0.01U
C713	ECEA1CSN4R7I	16V 4.7U
C714	ECEA1HKS010	50V 1U
C715	ECUE1H472KBN	50V 4700U
C716	ECUE1C473KBN	16V 0.047U
C717	ECUE1H681KBN	50V 680P
C718	ECEA1AKS101I	10V 100U
C719	ECUW1E103MBN	25V 0.01U
C720	ECUE1E153MBN	25V 0.015U
C721	ECUW1E103MBN	25V 0.01U
C722	ECEA0JKS470	6.3V 47U
C723	ECUZ1C104MBM	16V 0.1U
C724	ECUV1E333MBN	25V 0.033U
C725	ECUW1E103MBN	25V 0.01U
C726	ECUE1H471KBN	50V 470P
C727	ECEA0JKS470	6.3V 47U
C728, 729	ECUZ1C104MBM	16V 0.1U
C730	ECUZ1C224KBM	16V 0.22U
C731	ECEA0JKS331I	6.3V 330U
C732	ECUE1H102MBN	50V 1000P
C733	ECEA0JKS101I	6.3V 100U
C734	ECUE1E223MBN	25V 0.022U
C735	ECUZ1C224KBM	16V 0.22U
C737	ECUZ1C224KBM	16V 0.22U
C738	ECEA0JKS101I	6.3V 100U
C739	ECUW1E103MBN	25V 0.01U
C740	ECUE1H472MBN	50V 4700P
C741	ECUZ1C224KBM	16V 0.22U

Ref. No.	Part No.	Values & Remarks
C742	ECUZ1C104MBM	16V 0.1U
C743	ECEA0JKS331I	6.3V 330U
C744, 745	ECUE1H102KBN	50V 1000P
C746	ECEA0JKS101I	6.3V 100U
C747	ECUZ1C104MBM	16V 0.1U
C748	ECEA1HKS010	50V 1U
C749	ECUW1E103MBN	25V 0.01U
C750	ECUE1H050DCN	50V 5P
C751	ECUZ1C224KBM	16V 0.22U
C752	ECUZ1C104MBM	16V 0.1U
C753, 754	ECEA1HKS010	50V 1U
C755	ECUZ1C104MBM	16V 0.1U
C756, 757	ECUE1H050DCN	50V 5P
C758	ECUZ1C224KBM	16V 0.22U
C763	ECUW1E103MBN	25V 0.01U
C764	ECUE1H331KBN	50V 330P
C790	ECA1AKF820E	10V 82U
C801, 802	ECEA1HKA3R3B	50V 3.3U
C803	ECBT1E103ZF	25V 0.01U
C804	ECEA1CKA220B	16V 22U
C805	ECEA1CKA100B	16V 10U
C806	ECA1CM221B	16V 220U
C807, 808	ECEA1HKAR33B	50V 0.33U
C809, 810	ECBT1H3R3KC5	50V 3.3P
C811, 812	ECEA1HKA3R3B	50V 3.3U
C813, 814	ECBT1E103ZF	25V 0.01U
C815, 816	ECEA1HKAR33B	50V 0.33U
C817, 818	ECEA1HKAR22B	50V 0.22U
C819	ECEA0JKA101B	6.3V 100U
C820	ECEA1HKA010B	50V 1U
C821, 822	ECFR1E563KR	25V 0.056U
C823, 824	ECEA1HKAR68B	50V 0.68U
C825, 826	ECBT1H101KB5	50V 100P
C861-864	ECBT1H101KB5	50V 100P
C865, 866	ECBT1H221KB5	50V 220P
C867, 868	ECEA1AKA330B	10V 33U
C869, 870	ECBT1H102KB5	50V 1000P
C871, 872	ECFR1E223KR	25V 0.022U
C873, 874	ECFR1E682KR	25V 6800P
C875, 876	ECEA1HKA3R3B	50V 3.3U
C877, 878	ECBT1H104ZF5	50V 0.1U
C891, 892	ECBT1H101KB5	50V 100P
C901-905	ECBT1H561KB5	50V 560P
C951-953	ECBT1H561KB5	50V 560P
C954	ECBT1H102KB5	50V 1000P
C955	ECA0JM102B	6.3V 1000U
C956	EECF5R5U473	5.5V 0.047U
C957	ECA0JKF470B	6.3V 47U
C959	ECBT1H150JC5	50V 15P
C960	ECBT1H220JC5	50V 22P
C961	ECEA1HKA010B	50V 1U
C962	ECBT1C103MS5	16V 0.01U

Ref. No.	Part No.	Values & Remarks
C963	ECEA1AKA330B	10V 33U
C964, 965	ECBT1H102KB5	50V 1000P
C966	ECBT1C103MS5	16V 0.01U
C967	ECEA1AKA220B	10V 22U
C968	ECEA1HKA010B	50V 1U
		JUMPERS
RJ701	ERJ6GEY0R00A	JUMPER
RJ703-710	ERJ6GEY0R00A	JUMPER

Ref. No.	Part No.	Part Name & Description	Remarks
		CABINET PARTS	
1	RHD30007	SCREW	
2	RKM0181-K	CABINET	
3	XTBS3+8JFZ1	SCREW	
4	REZ0415-1	FLAT CABLE(9P)	
5	RGK0418-K	TRAY ORNAMENT	
6	RGR0130B-A	REAR PANEL	(E)
6	RGR0130B-B	REAR PANEL	(EB)
6	RGR0130B-D	REAR PANEL	(EG)
6	RGR0130C-A	REAR PANEL	(GC)
6	RGR0130B-C	REAR PANEL	(GN)
7	RMN0147	ANGLE	
8	RMR0479-W	CHASSIS	
9	RMV0041	HEAT SINK COVER	
10	RWJ1804060QQ	FLAT CABLE(4P)	
11	RWJ1804150QQ	FLAT CABLE(4P)	
12	RWJ0207120QQ	FLAT CABLE(7P)	
13	RWJ0210120QQ	FLAT CABLE(10P)	
14	RMA0501	ANGLE(UPPER)	
15	RMA0502	ANGLE(LOWER)	
16	XTB3+8JFZ	SCREW	
17	XTN26+6B	SCREW	
18	RDG0145	DAMPER GEAR	
19	RMN0145	FL HOLDER(MAIN)	
20	RMN0146	FL HOLDER(SPEC. ANALYZER)	
21	RGU0633-K	OPEN/CLOSE BUTTON	
22	RGU0634-K	G. EQUALIZER BUTTON	
23	RGU0635-K	SKIP/SEARCH/PAUSE BUTTON	
24	RGU0636-K1	TIMER PLAY/REC. BUTTON	
25	RGU0637-K	OPERATIONS(TUNER) BUTTON	
26	RGU0638-K	CANCEL/SET BUTTON	
27	RGU0639-K	VOL. PRESET BUTTON	
28	RGU0640-K1	POWER/SUPER BASS BUTTON	
29	RGU0641A-K	OPERATIONS(AMPLIFIER)BUTTON	
30	RGU0642-K1	OPERATIONS(DECK) BUTTON	
31	RGU0643-K	FF/REW(M.S.) BUTTON	
32	RGU0644-K	EJECT BUTTON	
33	RGW0113-K1	MAIN VOLUME KNOB	
34	RGW0128-K	AI JOG KNOB	
35	RGW0129-K	MIC VOLUME KNOB	
36	RKW0179-K	CASSETTE ORNAMENT(L)	
37	RKW0180-K	CASSETTE ORNAMENT(R)	
38	RMB0209	SPRING	
39	RMB0211	SPRING	
40	RMB0214	SPRING	
41	RMM0077-1	EJECT ROD(L)	
42	RMM0078-1	EJECT ROD(R)	
43	RMR0478A-W	SUPPORT	
44	RMR0478B-W	HOLDER	
45	RMS0324	SUPPORT	
46	RMA0503	EJECT ANGLE(L)	

Ref. No.	Part No.	Part Name & Description	Remarks
47	RML0230	EJECT ANGLE(L)	
48	RMS0242	SHAFT	
49	XUC2FT	E-RING	
50	RMA0504	EJECT ANGLE(R)	
51	RML0231	EJECT ANGLE(R)	
52	SHR9755	LATCH	
53	SNE4021-1	NUT	
54	XTBS26+8J	SCREW	
55	SUS894-1	SPRING	
56	XTB3+6FFZ	SCREW	
57	XTB3+16JFZ	SCREW	
58	RMQ0265	DAMPER GEAR COVER	
59	RFKGACH55E-K	FRONT PANEL ASS'Y	
59-1	SHG1654	FOOT	
60	RFKLACH55NAK	CASSETTE LID(L) ASS'Y	
60-1	QBP2006A	SPRING	
61	RFKLACH55NBK	CASSETTE LID(R) ASS'Y	
61-1	QBP2006A	SPRING	
62	RFKJACH55N-K	BOTTOM BOARD ASS'Y	
62-1	SHG1654	FOOT	
63	XTB3+10JFZ	SCREW	
64	RMS0340	HOLDER	
65	REX0295	FLAT CABLE(6P)	
66	RWJ5223170EX	FLEXIBLE CABLE(23P)	
67	RWJ1809090QQ	FLAT CABLE(9P)	
68	RWJ0209090QQ	FLAT CABLE(9P)	
69	RWJ1803065KK	FLAT CABLE(3P)	
70	RWJ1804150KQ	FLAT CABLE(4P)	
71	RWJ1812100CC	FLAT CABLE(12P)	
72	RWJ0210130QQ	FLAT CABLE(10P)	
73	RWJ0208330KQ	FLAT CABLE(8P)	
74	XTB3+12JFZ	SCREW	
75	RKW0177-K1	FL PANEL	
76	RKW0178-K	FL PANEL	
77	SHR9755	LATCH	

■ CABINET PARTS LOCATION

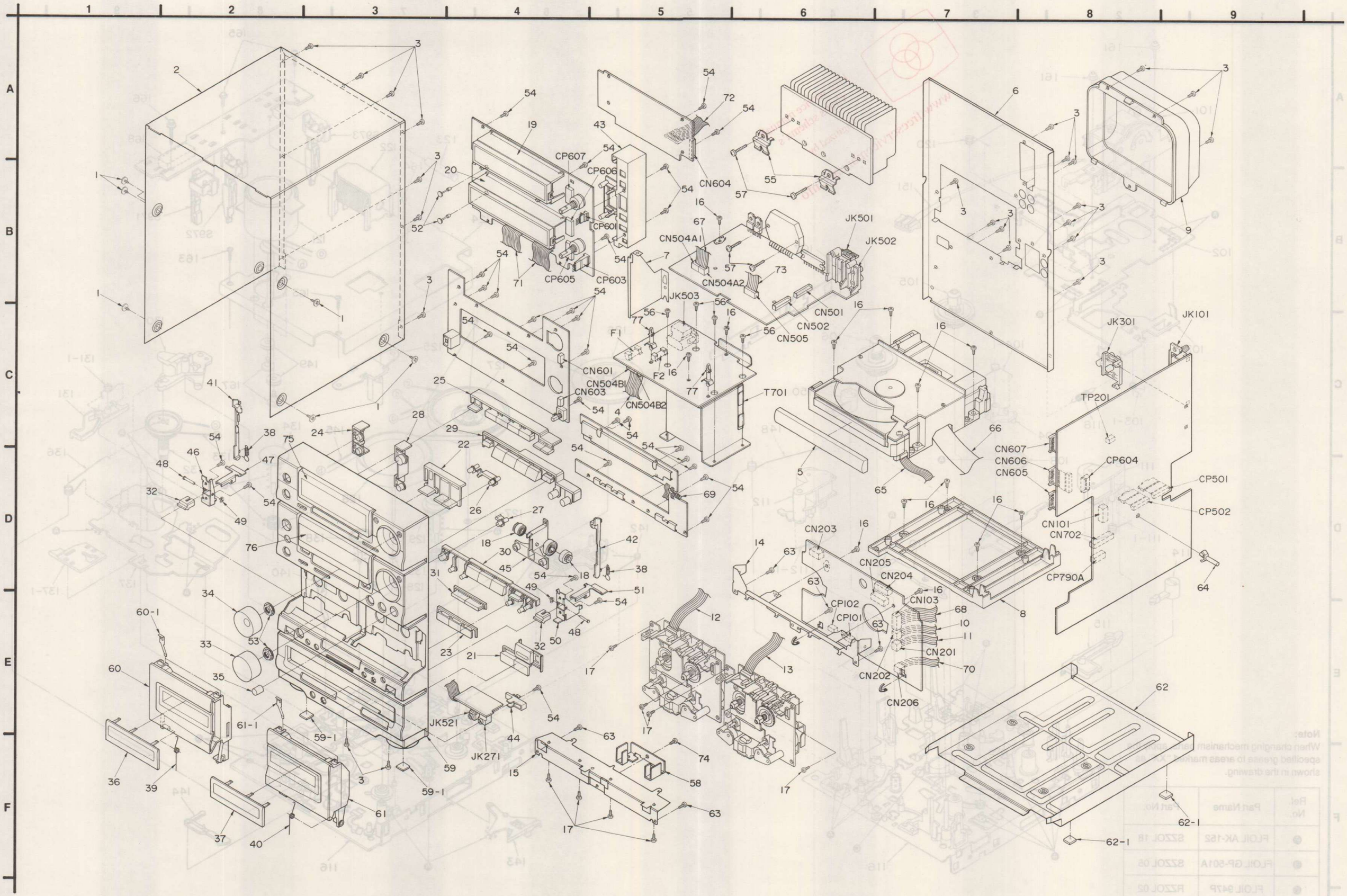

■ MECHANISM PARTS LOCATION •DECK 1

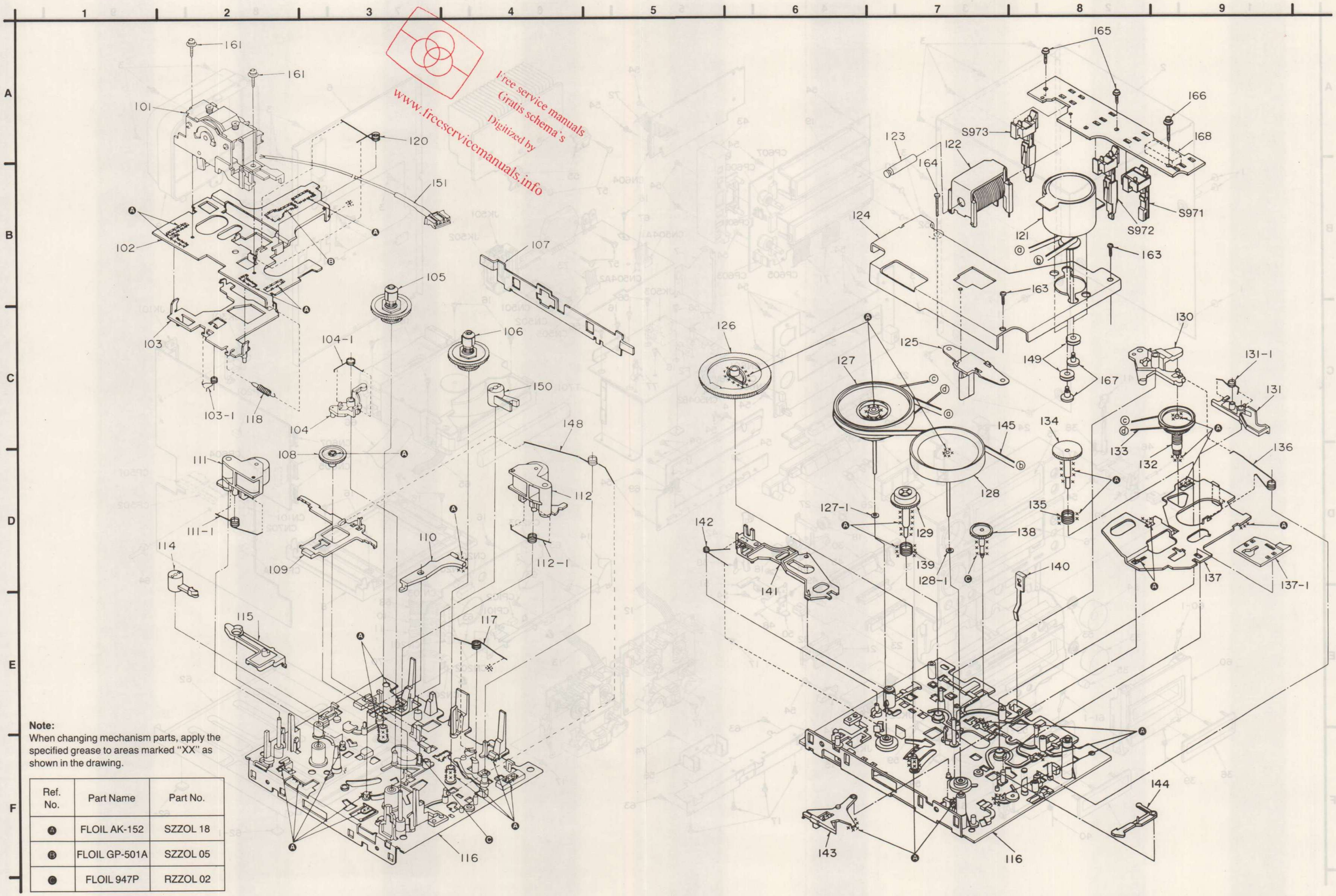

Note:
When changing mechanism parts, apply the specified grease to areas marked "XX" as shown in the drawing.

Ref. No.	Part Name	Part No.
Ⓐ	FLOIL AK-152	SZZOL 18
Ⓑ	FLOIL GP-501A	SZZOL 05
Ⓒ	FLOIL 947P	RZZOL 02

Ref. No.	Part No.	Part Name & Description	Remarks
		MECHANISM PARTS LIST	
(DECK 1)			
101	RXQ0051-1	HEAD BLOCK(PLAY)	
102	RUA793ZF	HEAD BASE	
103	RZLAR300	ROD	
103-1	RUW143ZA	SPRING	
104	1UB0089ZA	ARM	
104-1	RUW148ZA	SPRING	
105	1DM0018ZB	REEL TABLE(R)	
106	1DM0017ZB	REEL TABLE(F)	
107	RML0069-1	LEVER	
108	RDG5772ZC	GEAR	
109	RUB508ZB	BRAKET ROD	
110	RUB506ZB	LEVER	
111	1UB0088ZB	PINCH ROLLER(R)	
111-1	RUW141ZA	SPRING	
112	1UB0087ZB	PINCH ROLLER(F)	
112-1	RUW140ZC	SPRING	
114	RNL1ZD	DAMPER ARM	
115	RUB503ZD	MAIN LEVER	
116	RFKRRSCH9N	CHASSIS ASS'Y	
117	RUW142ZA	SPRING	
118	RUD105ZA	SPRING	
120	RUW139ZA	SPRING	
121	RFKPRSCH9N	DC MOTOR ASS'Y	
122	1UE0015ZA	PLUNGER	
123	RUB428ZE	MOVING IRON CORE	
124	RMA0101-1	ANGLE	
125	RMD5014ZC	ANGLE	
126	RDG5927ZG	MAIN GEAR	
127	1DW0037ZB	FLYWHEEL(F)	
127-1	RNW139ZA	WASHER	
128	1DW0038ZB	FLYWHEEL(R)	
128-1	RNW138ZA	WASHER	
129	1DG0006ZB	REEL TABLE GEAR	
130	RUB513ZD	ARM	
131	1UB0091ZA	LEVER	
131-1	RUW146ZA	SPRING	
132	1DR0011ZB	MAIN PULLEY	
133	RDV90ZB	BELT	
134	RDG5769ZA	REEL TABLE GEAR	
135	RUQ111ZB	SPRING	
136	RUW145ZA	SPRING	
137	1UB0090ZA	ROD	
137-1	RUB512ZB	ROD	
138	RDG5773ZB	GEAR	
139	RUQ112ZA	SPRING	
140	RUS609ZC	TAPE PRESSURE SPRING	
141	RUB514ZC	LEVER	
142	RUW147ZA	SPRING	

Ref. No.	Part No.	Part Name & Description	Remarks
143	RUB515ZA	LEVER	
144	RUB509ZA	LEVER	
145	RDV108ZA	CAPSTAN BELT	
148	RUW144ZA	SPRING	
149	RHG3032ZA	RUBBER CUSHION	
150	RNL180ZB	DAMPER ARM	
151	REX0132	LEAD WIRE(4P)	
161	XTW2+6L	SCREW	
163	XTN26+7J	SCREW	
164	RHE5203ZA	SCREW	
165	XTW2+8S	SCREW	
166	XYC2+JF16	SCREW	
167	RHD26002	SCREW	
168	RJS7T7ZA	SOCKET(7P)	

Ref. No.	Part No.	Part Name & Description	Remarks
		MECHANISM PARTS LIST	
(DECK 2)			
201	RXQ0007-2	HEAD BLOCK(REC/PLAYBACK)	
202	RUA793ZF	HEAD BASE	
203	RZLAR300	ROD	
203-1	RUW143ZA	SPRING	
204	1UB0089ZA	ARM	
204-1	RUW148ZA	SPRING	
205	1DM0018ZB	REEL TABLE(R)	
206	1DM0017ZB	REEL TABLE(F)	
207	RML0069-1	LEVER	
208	RDG5772ZC	GEAR	
209	RUB508ZB	BRAKET ROD	
210	RUB506ZB	LEVER	
211	1UB0088ZB	PINCH ROLLER(R)	
211-1	RUW141ZA	SPRING	
212	1UB0087ZB	PINCH ROLLER(F)	
212-1	RUW140ZC	SPRING	
214	RNL1ZD	DAMPER ARM	
215	RUB503ZD	MAIN LEVER	
216	RFKRRSCH9N	CHASSIS ASS'Y	
217	RUW142ZA	SPRING	
218	RUD105ZA	SPRING	
219	RUW144ZA	SPRING	
220	RUW139ZA	SPRING	
221	RFM133ZA	DC MOTOR	
222	1UE0015ZA	PLUNGER	
223	RUB428ZE	MOVING IRON CORE	
224	RMA0101-1	ANGLE	
225	RMD5014ZC	ANGLE	
226	RDG5927ZG	MAIN GEAR	
227	1DW0037ZB	FLYWHEEL(F)	
227-1	RNW139ZA	WASHER	
228	1DW0038ZB	FLYWHEEL(R)	
228-1	RNW138ZA	WASHER	
229	1DG0006ZB	REEL TABLE GEAR	
230	RUB513ZD	ARM	
231	1UB0091ZA	LEVER	
231-1	RUW146ZA	SPRING	
232	1DR0011ZB	MAIN PULLEY	
233	RDV90ZB	BELT	
234	RDG5769ZA	REEL TABLE GEAR	
235	RUQ111ZB	SPRING	
236	RUW145ZA	SPRING	
237	1UB0090ZA	ROD	
237-1	RUB512ZB	ROD	
238	RDG5773ZB	GEAR	
239	RUQ112ZA	SPRING	
240	RUS609ZC	TAPE PRESSURE SPRING	
241	RUB514ZC	LEVER	

Ref. No.	Part No.	Part Name & Description	Remarks
242	RUW147ZA	SPRING	
243	RUB515ZA	LEVER	
244	RUB509ZA	LEVER	
245	RDV108ZA	CAPSTAN BELT	
249	RHG3032ZA	RUBBER CUSHION	
250	RNL180ZB	DAMPER ARM	
251	REX0172	LEAD WIRE(5P)	
261	XTW2+6L	SCREW	
263	XTN26+7J	SCREW	
264	RHE5203ZA	SCREW	
265	XTW2+8S	SCREW	
266	XYC2+JF16	SCREW	
267	RHD26002	SCREW	
268	RJS10T77ZA	SOCKET(10P)	

■ MECHANISM PARTS LOCATION •DECK 2

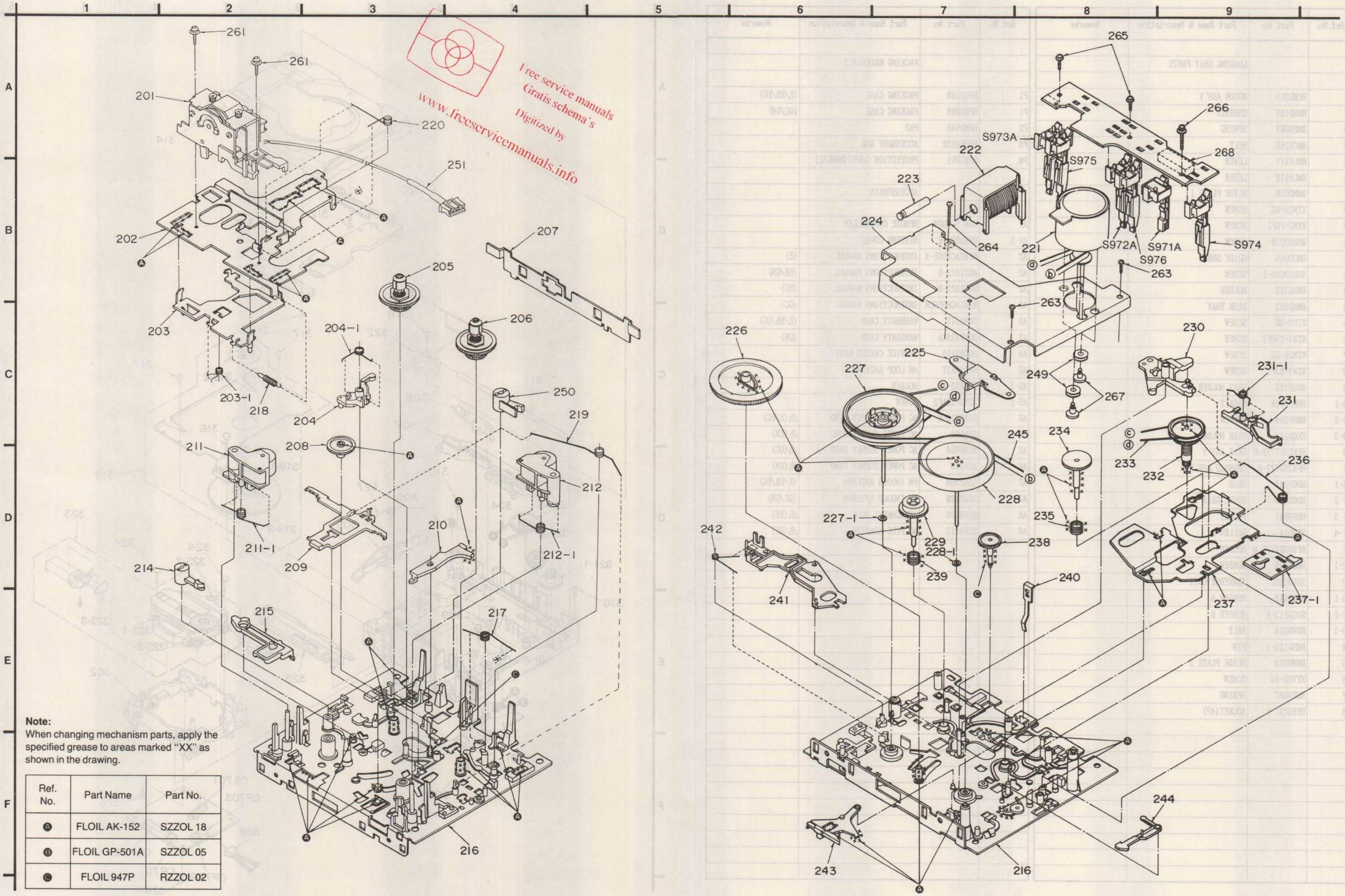

Note:
When changing mechanism parts, apply the specified grease to areas marked "XX" as shown in the drawing.

Ref. No.	Part Name	Part No.
Ⓐ	FLOIL AK-152	SZZOL 18
Ⓑ	FLOIL GP-501A	SZZOL 05
Ⓒ	FLOIL 947P	RZZOL 02

Ref. No.	Part No.	Part Name & Description	Remarks
		LOADING UNIT PARTS	
301	REM0019	MOTOR ASS'Y	
302	RMK0105	CHASSIS	
303	RME0063	SPRING	
304	RMG0158	BELT	
305	RML0177	LEVER	
306	RML0178	LEVER	
307	RMM0058	SLIDE PLATE 1	
308	XTN26+6G	SCREW	
309	XYN2+F6FZ	SCREW	
310	RHD20010	SCREW	
311	RMU0046	GUIDE SHAFT	
312	RHD20009-1	SCREW	
313	RMA0328	HOLDER	
314	RMK0103	DISK TRAY	
315	XTN2+8G	SCREW	
316	XTB3+25GFZ	SCREW	
317	XTN26+6G	SCREW	
318	XTN3+8JFZ	SCREW	
319	RXQ0122	TRAY HOLDER	
319-1	RHM245ZA	MAGNET	
319-2	RMR0334	HOLDER	
319-3	RXQ0123	DISK HOLDER	
320	RFKNXDT77B-H	GEAR ASS'Y	
321	RFKJXDT77-H	CHASSIS ASS'Y	
321-1	RDG0142	GEAR	
321-2	RDG0143	DRIVE GEAR 1	
321-3	RDP0041	PULLEY	
321-4	SDRD14	ROLLER B	
322	RFKNXDT77C-H	HOLDER	
322-1	RMG0159	RUBBER	
323	SODD110Z	TRAVERSE UNIT	
323-1	SHGD112	RUBBER A	
323-2	SHGD113-1	RUBBER B	
323-3	RDV0014	BELT	
324	RMS0123-1	PIN	
325	RMM0059	SLIDE PLATE 2	
326	XTV26+6G	SCREW	
327	RME0087	SPRING	
328	REE0217-1	SOCKET(4P)	

Ref. No.	Part No.	Part Name & Description	Remarks
		PACKING MATERIALS	
P1	RPG1098	PACKING CASE	(E/EB/EG)
P1	RPG1099	PACKING CASE	(GC/GN)
P2	RPN0546	PAD	
P3	RPQF0032	ACCESSORY BOX	
P4	SPB1061	PROTECTION COVER(MANUAL)	
		ACCESSORIES	
A1	RAK-SC306W	REMOTE CONTROLLER	
A1-1	RKK0020-K	BATTERY COVER	
A2	RFKSACH55E-K	INSTRUCTIONS MANUAL	(E)
A2	RQT1322-B	INSTRUCTIONS MANUAL	(EB/GN)
A2	RQT1323-D	INSTRUCTIONS MANUAL	(EG)
A2	RFKSACH55GCK	INSTRUCTIONS MANUAL	(GC)
A3	RQA0013	WARRANTY CARD	(E/EB/EG)
A3	RQX7433ZA	WARRANTY CARD	(GN)
A4	RQCB0169	SERVICE CENTER LIST	
A5	SPB1163T	AM LOOP ANTENNA	
A5-1	SMA233-1M	HOLDER	
A5-2	XTN3+10AFZ	SCREW	
A6	RJA0019-K	AC POWER SUPPLY CORD	⚠(E/EG)
A6	SJA193	AC POWER SUPPLY CORD	⚠(EB)
A6	RJA0004	AC POWER SUPPLY CORD	⚠(GC)
A6	SJA173	AC POWER SUPPLY CORD	⚠(GN)
A7	SSA270M	FM INDOOR ANTENNA	(E/EB/EG)
A7	SSA272M	FM INDOOR ANTENNA	(GC/GN)
A8	SJP9009	ATTACHMENT PLUG	⚠(EB)
A9	SJP9215	AC PLUG ADAPTOR	⚠(GC)

■ CABINET PARTS LOCATION (Loading unit parts)

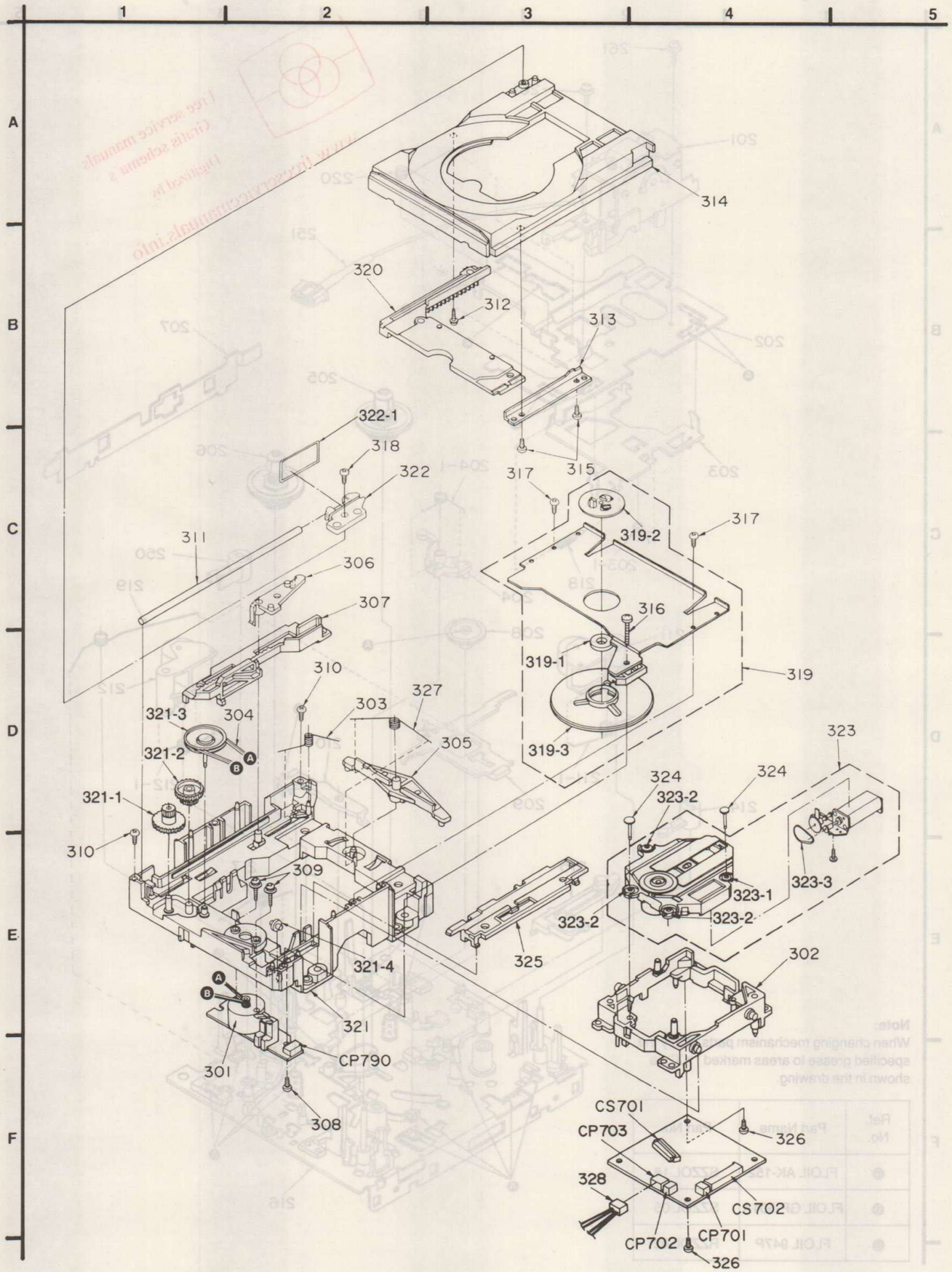

■ PACKAGING

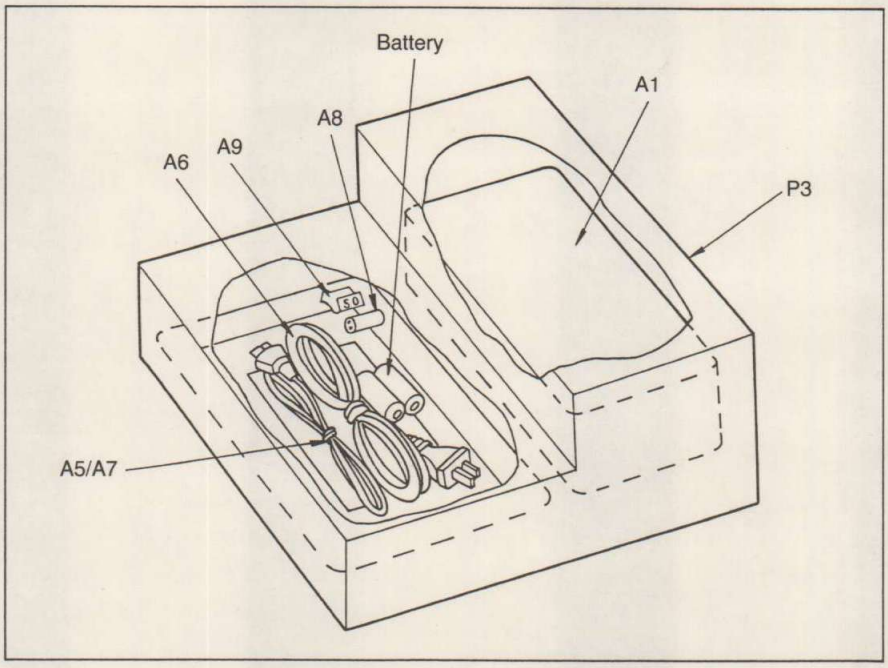

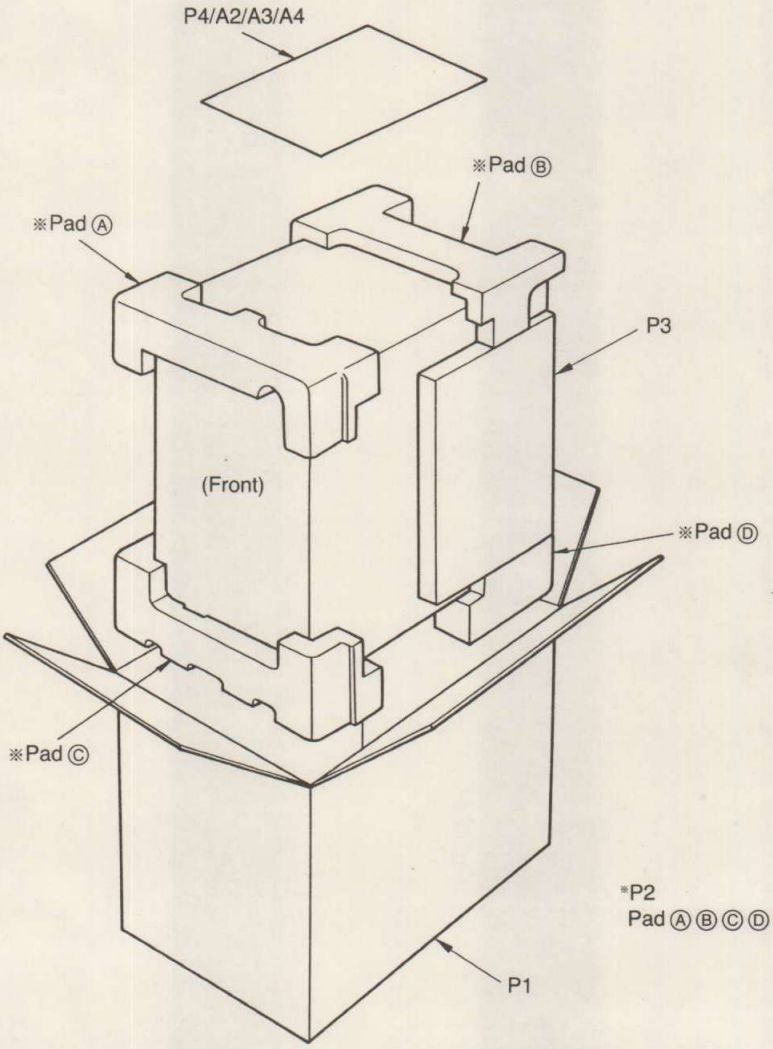

*P2
Pad Ⓐ Ⓑ Ⓒ Ⓓ Ass'y: RPN0546

Printed in Japan
F910913540FF/HH/TN