ORDER NO. MD9502014C2

Service Manual

COMPACT disc DIGITAL AUDIO

MASH*1 multi-stage noise shaping

*2 DOLBY B NR

CD Stereo System

SA-CH72

Colour

(K) . . . . . Black Type

Area

Suffix for Model No.	Area	Colour
(E)	Continental Europe	(K)
(EB)	Great Britain	
(EG)	Germany and Italy	

Remote Control Transmitter

SB-CH72 SA-CH72 SB-CH72

System	Music Center	Speaker
SC-CH72 E	SA-CH72 E	SB-CH72 E (made in PAES)
SC-CH72 EB	SA-CH72 EB	
SC-CH72 EG	SA-CH72 EG	

TAPE SECTION : AR300 MECHANISM SERIES
CD SECTION : RAE0113Z TRAVERSE DECK SERIES

Specifications

Amplifier Section

1 kHz continuous power output, both channels driven	2 x 35 W (THD 1%, 6Ω)
RMS	2 x 47 W (THD 10%, 6Ω)
Total harmonic distortion	
Half power at 1 kHz	0.07 % (6Ω)
Frequency response	
CD, AUX	45 Hz — 20 kHz (–3 dB)
Input sensitivity and impedance	
AUX	250 mV, 28 kΩ
Load impedance	6 Ω

FM Tuner Section

Frequency range	87.5 — 108.0 MHz
Sensitivity	23.3 dBf
Total harmonic distortion	
MONO	0.3%
STEREO	0.5%
S/N MONO	60 dB
Image rejection at 98 MHz	35 dB
Stereo separation at 1 kHz	35 dB
Antenna terminal(s)	75 Ω (unbalanced)

AM Tuner Section

Frequency range	
MW	522 — 1611 kHz
LW	144 — 288 kHz
Sensitivity (for 500 mW)	
MW (at 999 kHz)	250 μV/m
LW (at 252 kHz)	500 μV/m

Notes :

1. Specifications are subject to change without notice. Weight and dimensions are approximate.
2. Total harmonic distortion is measured by the digital spectrum analyzer.

*2

Dolby noise reduction manufactured under license from Dolby Laboratories Licensing Corporation.
"Dolby" and the double-D symbol are trade marks of Dolby Laboratories Licensing Corporation.

Cassette Deck Section

Track system	4 track, 2 channel
Heads	
Playback	Solid permalloy head (Rotary head)
Record/playback	Solid permalloy head (Rotary head)
Erasure	Double gap ferrite head
Motor	DC servo motor
Recording system	AC bias 100 kHz
Erasing system	AC erase 100 kHz
Tape speed	4.8 cm/s (1⁷/₈ ips)
Frequency response	
NORMAL	40 Hz — 14 kHz (+3 dB, –6 dB)
CrO_2	40 Hz — 14 kHz (+3 dB, –6 dB)
S/N (CrO_2 type)	
Dolby NR off	52 dB (A-WTD)
Dolby NR on	61 dB (CCIR)
Wow and flutter	0.1% (WRMS)
Fast forward and rewind time	Approx. 110 seconds with C-60 cassette tape

CD Changer Section

Sampling frequency	44.1 kHz
Decoding	16 bit linear
Beam source/wave length	Semiconductor laser/780 nm
Number of channels	Stereo
Frequency response	20 Hz — 20 kHz (+1, –2 dB)
S/N	
CD UNIT OUT	95 dB (JIS.A)
Wow and flutter	Below measurable limit
Digital filter	4 fs
D/A converter	MASH (1 bit DAC)

General

Power consumption	120 W
Power supply	AC 50 Hz, 230 V (E, EG) AC 50 Hz, 230 — 240 V (EB)
Dimensions (W x H x D)	270 x 345 x 327 mm
Weight	8.2 kg

*1 MASH is a trademark of NTT.

Panasonic®

⚠ WARNING

This service information is designed for experiense repair technicians only and is not designed for use by the general public. It does not contain warnings or cautions to advise non-technical individuals of potential dangers in attempting to service a product. Products powered by electricity should be serviced or repaired only by experienced professional technicians. Any attempt to service or repair the product or products dealt with in this service information by anyone else could result in serious injury or death.

Contents

Before Repair and Adjustment

Disconnect AC power, Discharge both Power Supply Capacitors C522 and C523 through a 10Ω , 5W resistor to ground.
DO NOT SHORT-CIRCUIT DIRECTLY (with a screwdriver blade, for instance), as this may destroy solid state devices.
After repairs are completed, restore power gradually using a variac, to avoid overcurrent.
Current consumption at 230V (240V for EB area), 50 Hz in NO SIGNAL mode should be less than 250mA.

Handling Precautions for Traverse Deck

The laser diode in the traverse deck (optical pickup) may break down due to potential difference caused by static electricity of clothes or human body. So, be careful of electrostatic breakdown during repair of the traverse deck (optical pickup).

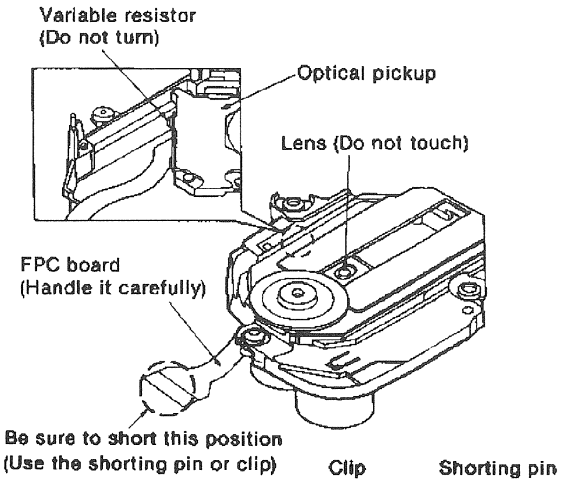

- **Handling of traverse deck (optical pickup)**

1. Do not subject the traverse deck (optical pickup) to static electricity as it is extremely sensitive to electrical shock.
2. To prevent the breakdown of the laser diode, an antistatic shorting pin is inserted into the flexible board (FPC board). When removing or connecting the short pin, finish the job in as short time as possible.
3. Take care not to apply excessive stress to the flexible board (FPC board).
4. Do not turn the variable resistor (laser power adjustment). It has already been adjusted.

- **Grounding for electrostatic breakdown prevention**

1. Human body grounding
   Use the anti-static wrist strap to discharge the static electricity from your body.
2. Work table grounding
   Put a conductive material (sheet) or steel sheet on the area where the traverse deck (optical pickup) is placed, and ground the sheet.

Caution :
The static electricity of your clothes will not be grounded through the wrist strap. So, take care not to let your clothes touch the traverse deck (optical pickup).

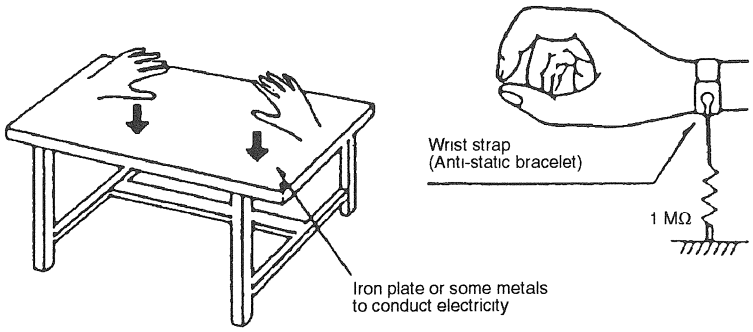

■ Protection Circuitry

The protection circuitry may have operated if either of the following conditions are noticed:

- No sound is heard when the power is turned on.
- Sound stops during a performance.

The function of this circuitry is to prevent circuitry damage if, for example, the positive and negative speaker connection wires are "shorted", or if speaker systems with an impedance less than the indicated rated impedance of the amplifier are used.

If this occurs, follow the procedure outlines below:

1. Turn off the power.
2. Determine the cause of the problem and correct it.
3. Turn on the power once again after one minute.

Note:
When the protection circuitry functions, the unit will not operate unless the power is first turned off and then on again.

■ Precaution of Laser Diode

CAUTION : This product utilizes a laser diode with the unit turned "ON", invisible laser radiation is emitted from the pick up lens.
Wavelength : 780 nm
Maximum output radiation power from pick up : 100 μW/VDE

Laser radiation from pick up unit is safety level, but be sure the followings:

1. Do not disassemble the optical pick up unit, since radiation from exposed laser diode is dangerous.
2. Do not adjust the variable resistor on the pick up unit. It was already adjusted.
3. Do not look at the focus lens using optical instruments.
4. Recommend not to look at pick up lens for a long time.

ACHTUNG: Dieses produkt enthält eine laserdiode. Im eingeschalteten zustand wird unsichtbare laserstrahlung von der lasereinheit abgestrahlt.

Wellenlänge : 780nm
Maximale strahlungsleistung der lasereinheit :100μW/VDE

Die strahlung an der lasereinheit ist ungefährlich, wenn folgende punkte beachtet werden:

1. Die lasereinheit nicht zerlegen, da die strahlung an der freigelegten laserdiode gefährlich ist.
2. Den werkseitig justierten einstellregler der lasereinhit nicht verstellen.
3. Nicht mit optischen instrumenten in die fokussierlinse blicken.
4. Nicht über längere zeit in die fokussierlinse blicken.

ADVARSEL: I dette a apparat anvendes laser.

CAUTION!
THIS PRODUCT UTILIZES A LASER.
USE OF CONTROLS OR ADJUSTMENTS OR PERFORMANCE OF PROCEDURES OTHER THAN THOSE SPECIFIED HEREIN MAY RESULT IN HAZARDOUS RADIATION EXPOSURE.

■ Use of Caution Labels

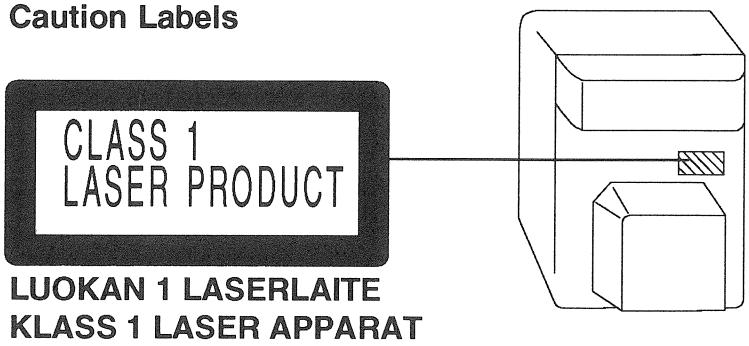

LUOKAN 1 LASERLAITE
KLASS 1 LASER APPARAT

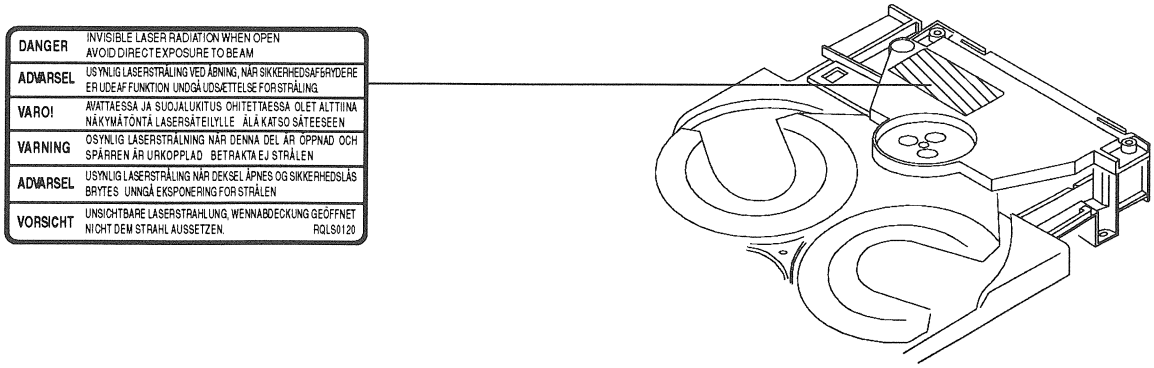

Caution for AC Mains Lead

[For [EB] area.]
For your safety, please read the following text carefully.

This appliance is supplied with a moulded three pin mains plug for your safety and convenience. A 5-ampere fuse is fitted in this plug. Should the fuse need to be replaced please ensure that the replacement fuse has a rating of 5-ampere and that it is approved by ASTA or BSI to BS1362. Check for the ASTA mark or the BSI mark on the body of the fuse.

If the plug contains a removable fuse cover you must ensure that it is refitted when the fuse is replaced.
If you lose the fuse cover, the plug must not be used until a replacement cover is obtained. A replacement fuse cover can be purchased from your local dealer.

CAUTION !
IF THE FITTED MOULDED PLUG IS UNSUITABLE FOR THE SOCKET OUTLET IN YOUR HOME THEN THE FUSE SHOULD BE REMOVED AND THE PLUG CUT OFF AND DISPOSED OFF SAFELY.
THERE IS A DANGER OF SEVERE ELECTRICAL SHOCK IF THE CUT OFF PLUG IS INSERTED INTO ANY 13-AMPERE SOCKET.

If a new plug is to be fitted, please observe the wiring code as shown below.
If in any doubt please consult a qualified electrician.

IMPORTANT
The wires in this lead are coloured in accordance with the following code:
Blue: Neutral
Brown: Live
As the colours of the wires in the mains lead of this appliance may not correspond with the coloured markings identifying the terminals in your plug, proceed as follows:
The wire which is coloured BLUE must be connected to the terminal in the plug which is marked with the letter N or coloured BLACK.
The wire which is coloured BROWN must be connected to the terminal in the plug which is marked with the letter L or coloured RED.

Under no circumstances should either or these wires be connected to the earth terminal of the three pin plug, marked with the letter E or the Earth symbol ⏚ .

Before use
Remove the connector cover as follows.

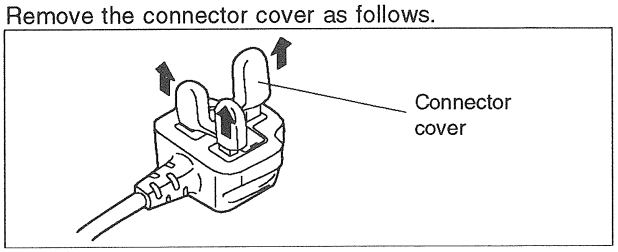

How to replace the fuse
1. Remove the fuse cover with a screwdriver.

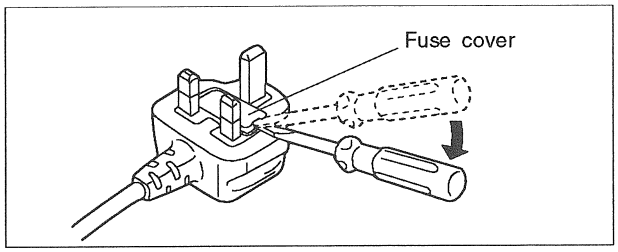

2. Replace the fuse and attach the fuse cover.

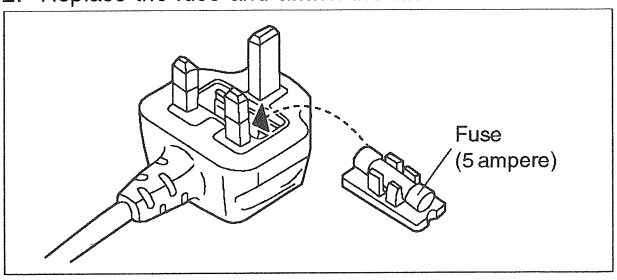

Accessories

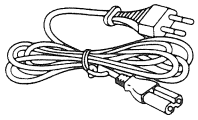 For only E, EG area AC power supply cord (RJA0019-2K).....1 pc	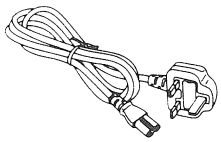 For only EB area AC power supply cord (VJA0733).....1 pc	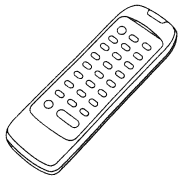 Remote control transmitter (EUR643801).....1 pc
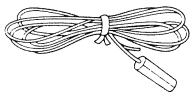 FM indoor antenna (SSA270M).....1 pc	 For only EB area Antenna adapter (SJP9009).....1 pc	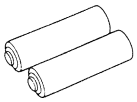 Remote control batteries(UM-4, AAA, R03)....2 pc

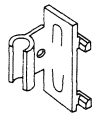		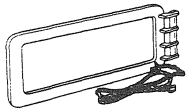
Antenna holder (RMN0244).....1 pc	Screw (XTN3+12AFZ).....1 pc	AM loop antenna (SLA9Z5T).....1 pc

■ Connections

The configuration of the AC power supply cord and FM indoor antenna differ according to the area.

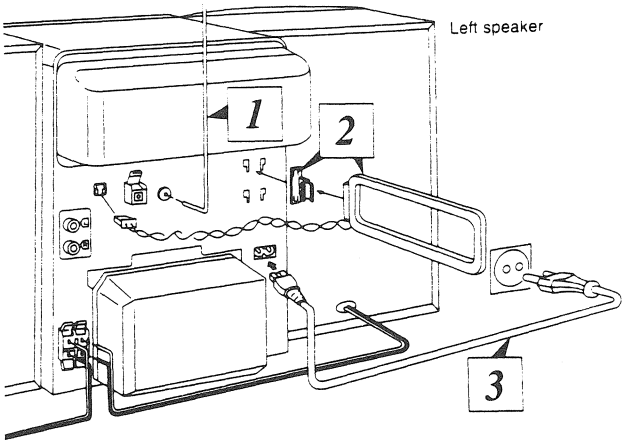

1. Connect the FM indoor antenna

Install the antenna on a wall at a height and in a direction which result in the best reception.
The tip of the internal antenna wire should not come into contact with any metal objects.

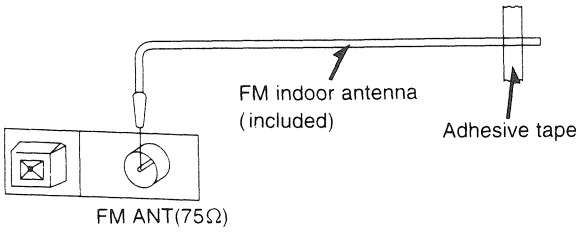

2. Connect the AM (LW/MW) loop antenna

1. Attach the antenna holder to the rear panel. Press the antenna holder hard enough to get it fixed firmly in the place, with a click.

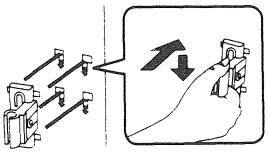

2. Clamp the AM loop antenna to the antenna holder.

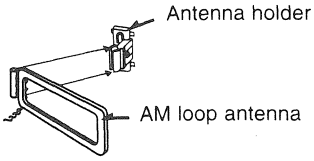

3. Connect the antenna terminal to the rear panel of the unit.

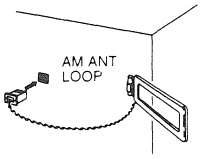

4. While listening to an LW/MW broadcast, position the loop antenna for the best reception.

You may attach the antenna holder to a rack or other structure. Use a screw (included) to attach as shown in the figure.

Note
To minimize noise pickup, keep the AM loop antenna cord away from the flat cable.

For United Kingdom:

BE SURE TO READ THE CAUTION FOR AC MAINS LEAD ON PAGE 4 BEFORE PROCEEDING TO STEP 3.

3. Connect the AC power supply cord after you have connected all other cables and cords.

For United Kingdom:
Insertion of Connector

Even when the connector is perfectly inserted, depending on the type of inlet used, the front part of the connector may jut out as shown in the drawing. However there is no problem using the unit.

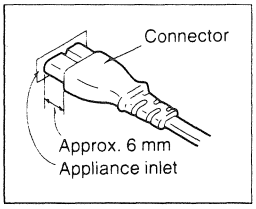

Optional antenna connections

You may need an outdoor antenna if you use this system in a mountainous region or inside a reinforced-concrete building, etc.

FM outdoor antenna (not included)

If the FM indoor antenna does not provide satisfactory reception of FM broadcasts, use an outdoor antenna.

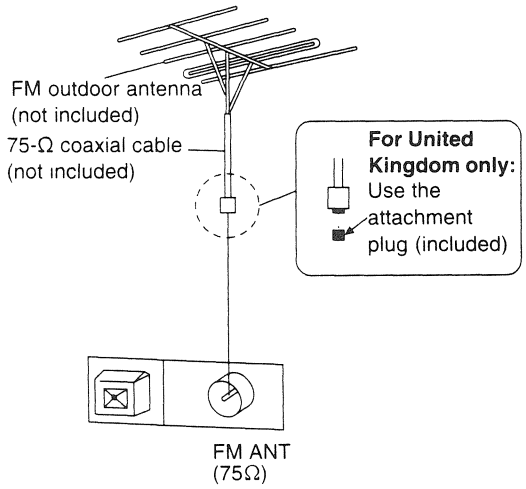

AM (LW/MW) outdoor antenna (not included)

Connect the outdoor antenna without removing the AM loop antenna.
Run 5 to 12 m of vinyl-covered wire horizontally along a window or other convenient location.

An outdoor antenna should be installed by a competent technician only.

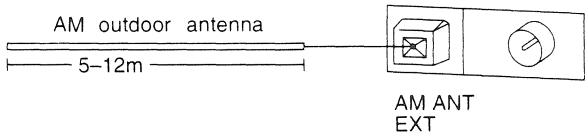

External unit connection

For details, refer to the operating instructions of the units which are to be connected.
When units other than those described below are to be connected, please consult with your audio dealer.

Connecting an external unit

This example shows how to connect the analog player with the PHONO OUT/LINE OUT switch.
Set the LINE OUT position at the back of the analog player.
Only an analog player with a built-in phono equalizer can be connected.

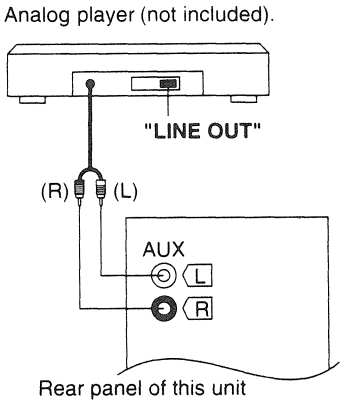

Location of Controls

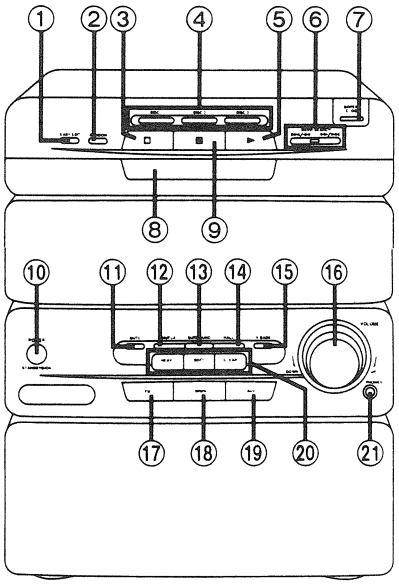

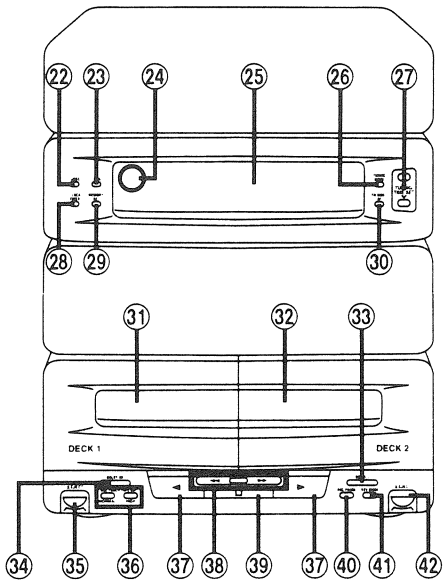

① Easy edit button (EASY EDIT)
② Random play button (RANDOM)
③ Stop button (□)
④ Disc buttons (DISC 1, DISC 2, DISC 3)
⑤ Play button (▶)
⑥ Skip/search button (|◀◀/◀◀, ▶▶/▶▶|)
⑦ Disc tray open/close button (⏏ OPEN/CLOSE)
⑧ Loading drawer
⑨ Pause button (❚❚)
⑩ Power "STANDBY ⏻/ON" switch (POWER, STANDBY ⏻/ON)
⑪ MUTE button (MUTE)
⑫ ON/FLAT button (ON/FLAT)
⑬ SURROUND button (SURROUND)
⑭ HALL button (HALL)
⑮ V. BASS button (V. BASS)
⑯ Volume control (VOLUME)
⑰ FM button (FM)
⑱ LW/MW button (LW/MW)
⑲ AUX button (AUX)
⑳ Equalizer buttons (HEAVY, SOFT, CLEAR)
㉑ Headphones jack (PHONES)
㉒ Record timer button (REC)
㉓ Play timer button (PLAY)
㉔ Remote control signal sensor
㉕ Display section
㉖ Tuning mode select button (TUNING MODE)
㉗ Tuning/time set button (TUNING/TIME SET)
㉘ Clock/timer button (CLOCK/TIMER)
㉙ Memory/set button (MEMORY/SET)
㉚ FM mode/beat proof button (FM MODE/BP)
㉛ Deck 1 cassette holder
㉜ Deck 2 cassette holder
㉝ Deck 1/Deck 2 select button (DECK 1/2)
㉞ Dolby noise reduction button (DOLBY NR)
㉟ Deck 1 holder open button (⏏ EJECT)
㊱ One-touch tape edit buttons (NORMAL, HIGH)
㊲ Playback buttons (◀ , ▶)
㊳ Fast forward/rewind/tape program sensor button (◀◀ , ▶▶)
㊴ Stop button (□)
㊵ Record pause button (REC PAUSE)
㊶ Reverse mode button (REV MODE)
㊷ Deck 2 holder open button (⏏ EJECT)

Operation Checks and Main Component Replacement Procedures

1. **This section describes procedures for checking the operation of the major printed circuit boards and replacing the main components.**
2. **For reassembly after operation checks or replacement, reverse the respective procedures. Special reassembly procedures are described only when required.**
3. **Select items from the following index when checks or replacement are required.**
4. **Refer the Parts No, if necessary.**

• Contents

page

Warning : This product uses a laser diode. Refer to caution statements on page 3.

ACHTUNG : • Die lasereinheit nicht zerlegen.
• Die lasereinheit darf nur gegen eine vom hersteller spezifizierte einheit ausgetauscht werden.

Checking Procedure for each major P.C.B.

1. Checking of the Main P.C.B. , Tuner P.C.B. and FL P.C.B.

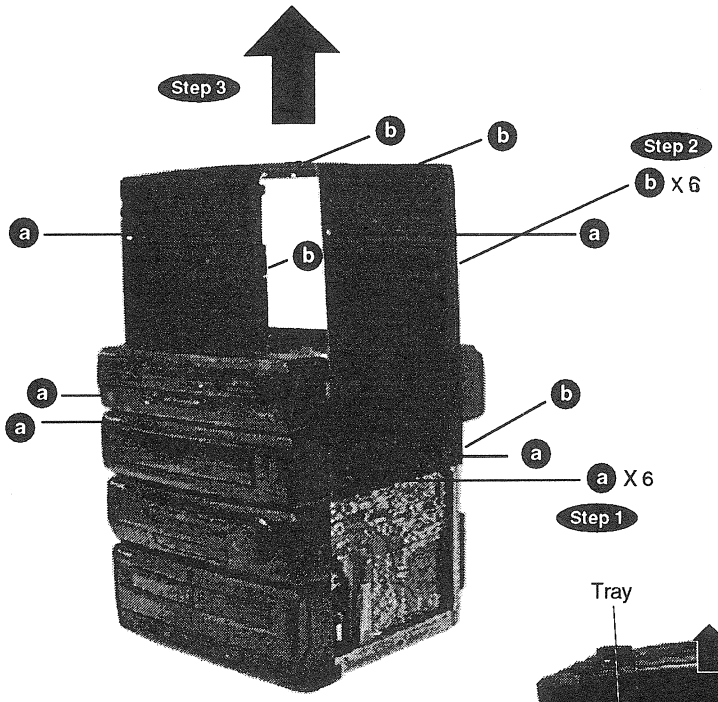

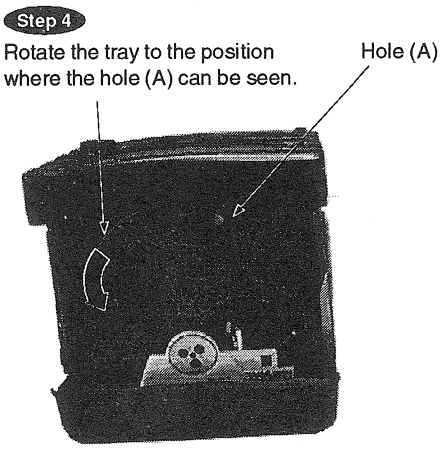

Step 5

Push the drive gear (B) in the direction of arrow① with a flat head (–) screwdriver. The tray will slightly move in the direction of arrow②. Pull out the tray in the direction of arrow②.

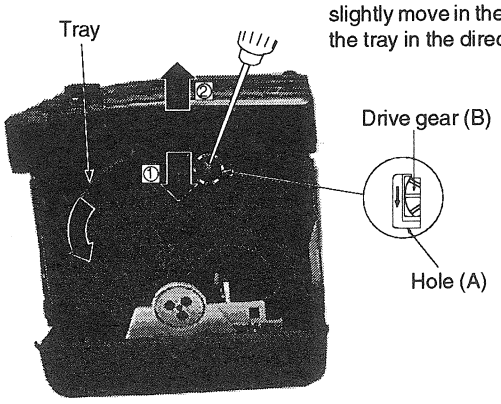

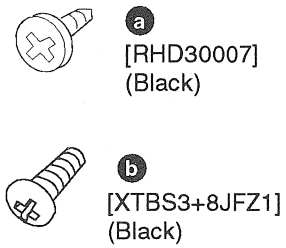

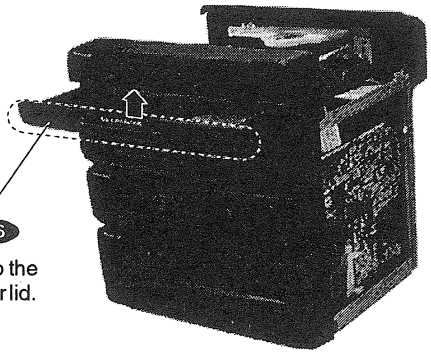

Step 6

Slide up the changer lid.

Step 8

Push up the rear panel of CD changer in the direction of arrow and remove the rear panel of CD changer.

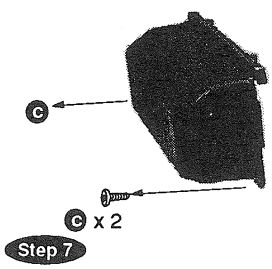

Step 7

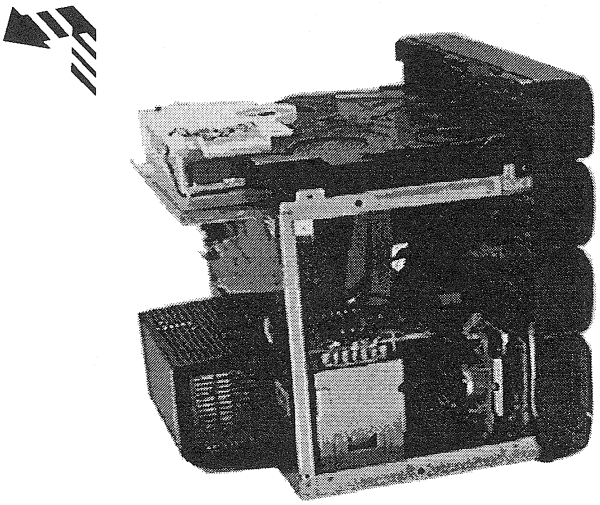

Step 9

Remove the CD changer unit.

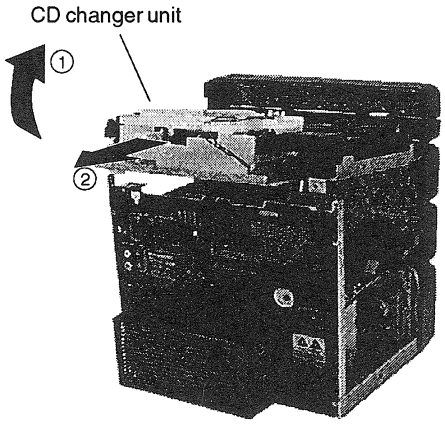

Check the Tuner, FL and Main P.C.B. with this condition.

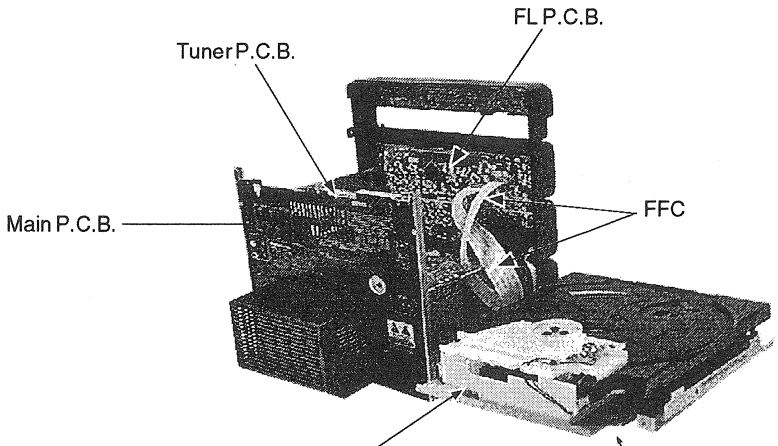

Step 10 Place the changer unit beside the main unit.

Place the changer unit on a stand.

C [XTBS3+8JFZ1] (Black)

How to remove each P.C.B.

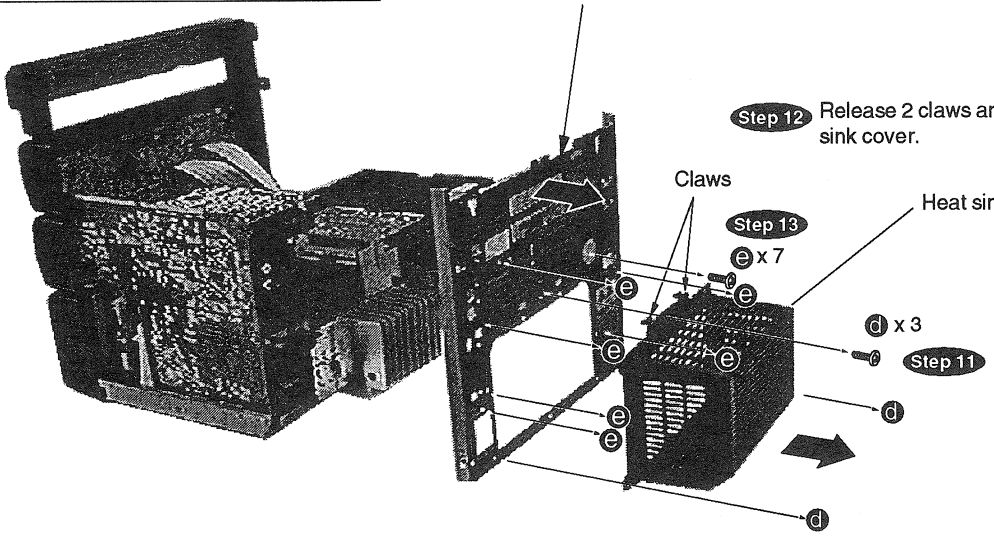

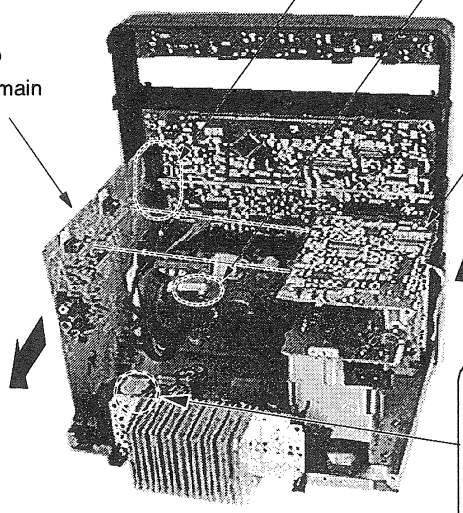

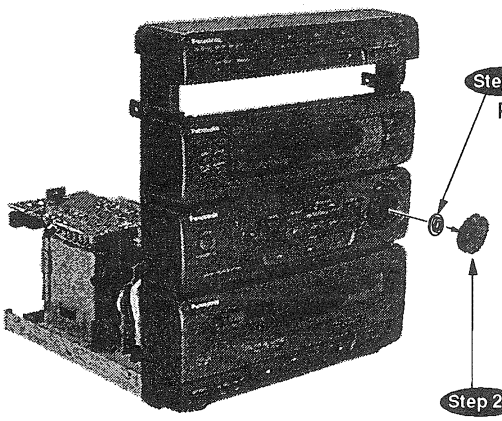

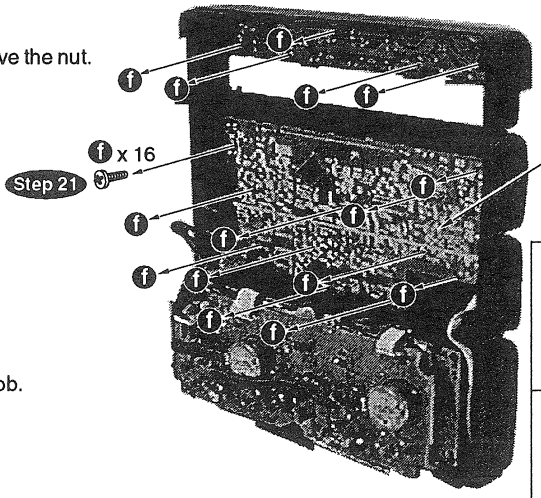

d , e
[XTBS3+8JFZ1]
(Black)

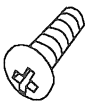

f
[XTBS26+10J]
(Brass)

2. Checking of the Power Amplifier P.C.B.

Step 1 Follow the procedures in 'Checking of the Main P.C.B. , Tuner P.C.B. and FL P.C.B.' (step 1 ~ step 14).

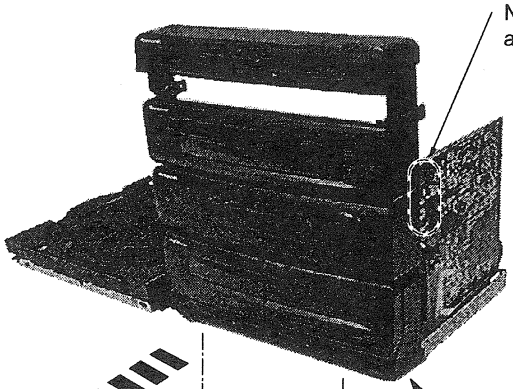

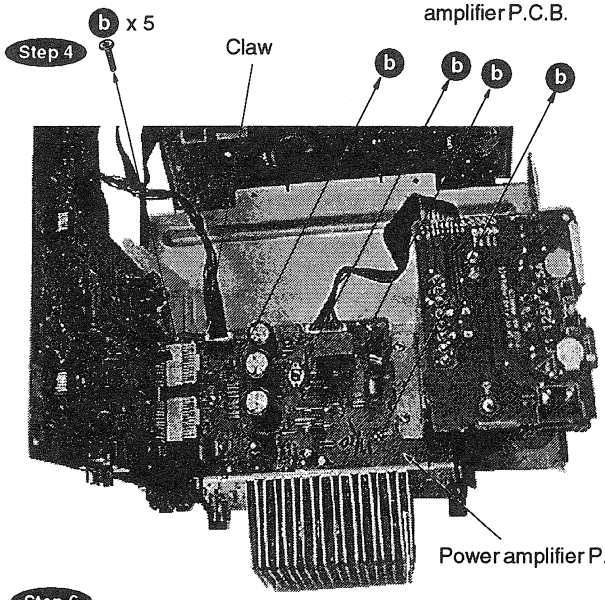

Step 5
Release the claw and remove the power amplifier P.C.B.

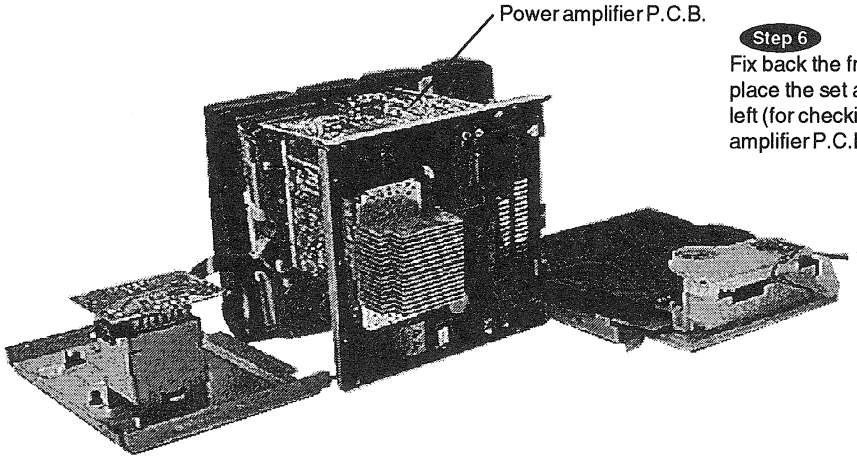

Step 6
Fix back the front panel and place the set as shown on the left (for checking the power amplifier P.C.B.).

a [XTBS3+8JFZ1] (Black)

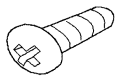

b [XTB3+20J] (Brass)

3. Checking of the Mechanism Control P.C.B.

Step 1 Follow the procedures in 'Checking of the Main P.C.B. , Tuner P.C.B. and FL P.C.B.' (step1 ~ step 10).

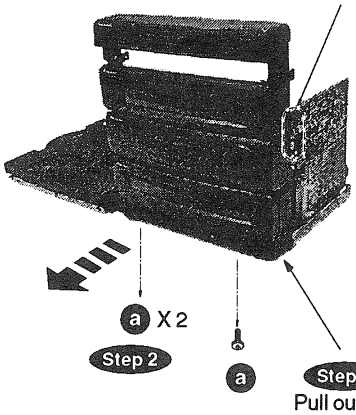

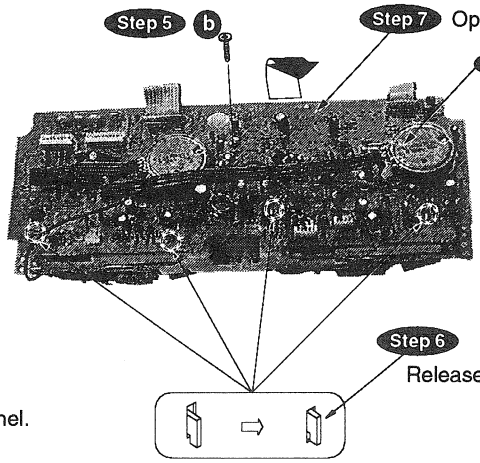

a [XTBS3+8JFZ1] (Black)

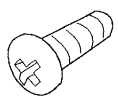

b [XTB3+12J] (Brass)

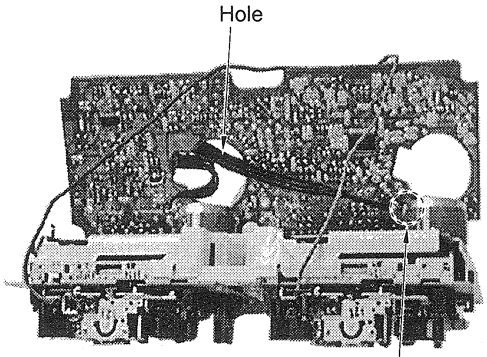

Step 8
Pass the lead wire through the hole and solder it back to the motor terminal.

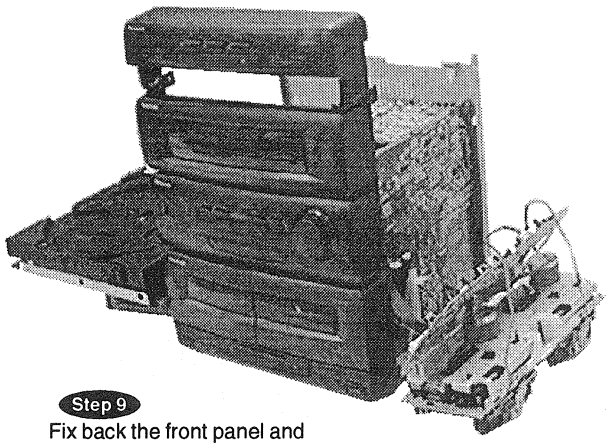

Step 9
Fix back the front panel and place the set as shown above (for checking the mechanism control P.C.B.).

4. Checking of the Servo P.C.B.

Step 1 Follow the procedures in 'Checking of the Main P.C.B. , Tuner P.C.B. and FL P.C.B.' (step1 ~ step 10).

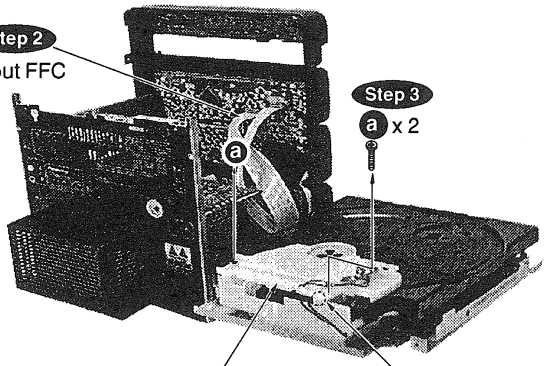

Step 4
Release claw and remove the clamper plate.

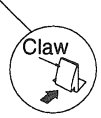

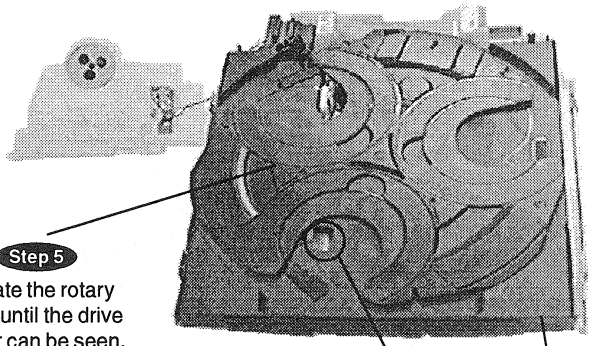

Step 5
Rotate the rotary tray until the drive gear can be seen.

Step 6
Push the drive gear in the direction indicated and pull out the tray ass'y.

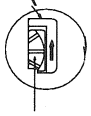

Drive gear

Tray ass'y.

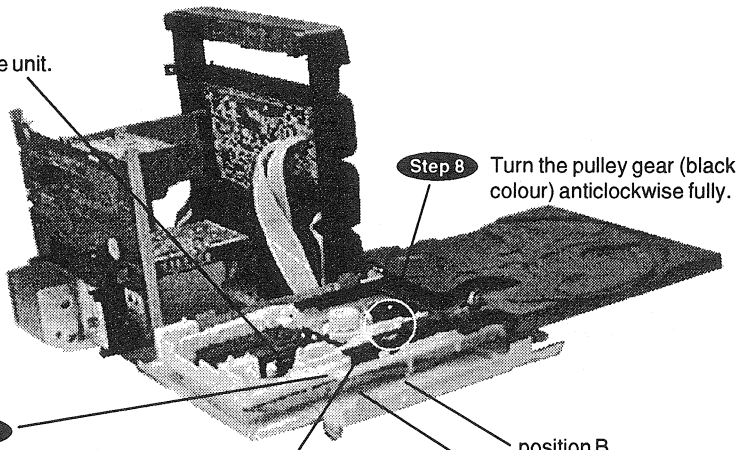

Step 10
Slide back the tray ass'y and connect the FFC. Then place the traverse unit as shown below for checking.

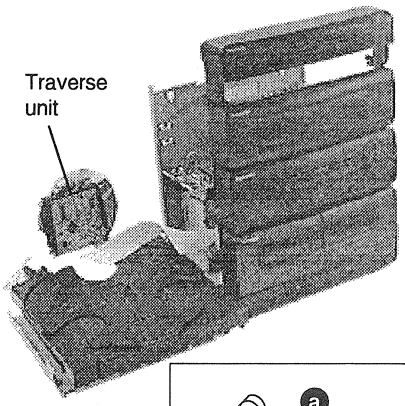

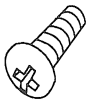

a
[XTBS3+16JFZ]
(Black)

Main Component Replacement Procedure

1. Replacement of the Cassette Lids.

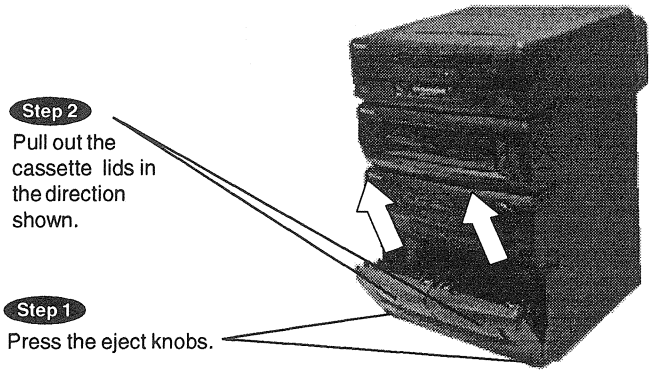

2. Replacement of the Loading Unit and Tray Base.

Step 1 Follow the procedures in 'Checking of the Servo P.C.B.' (step1 ~ step 4).

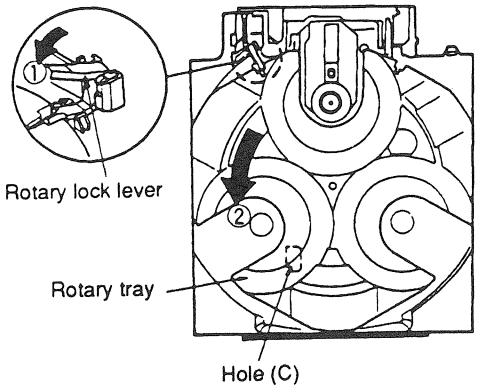

Step 2 While pressing the rotary lock lever in the direction of arrow ① and then rotate the rotary tray to the position that can be confirmed the hole (C) in the direction of arrow ②.

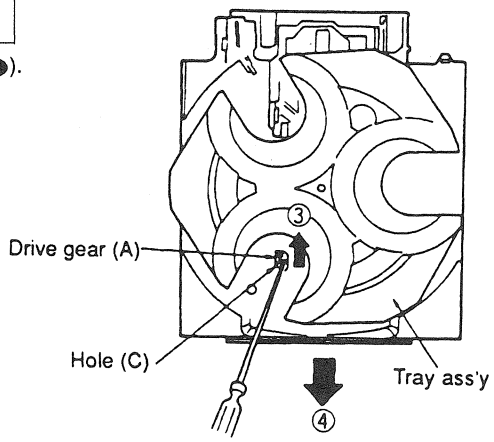

Step 3 Pressing the drive gear (A) in the direction of arrow ③ with inserting the (–) screwdriver in the hole (C), the tray ass'y moves slightly in the direction of arrow ④. Then, pull the tray ass'y in the direction of arrow ④.

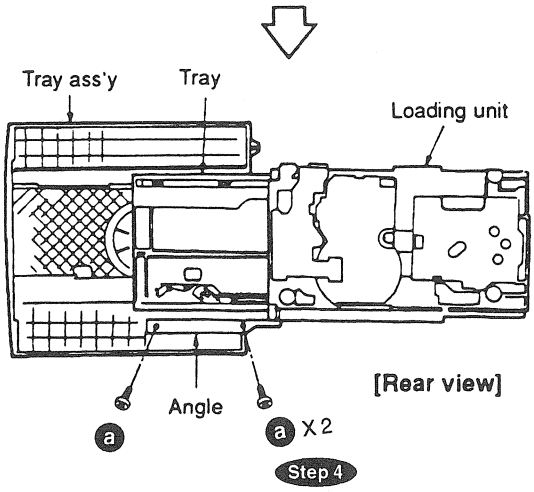

Step 5 Remove the angle.

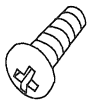

a [XTBS26+10J] (Brass)

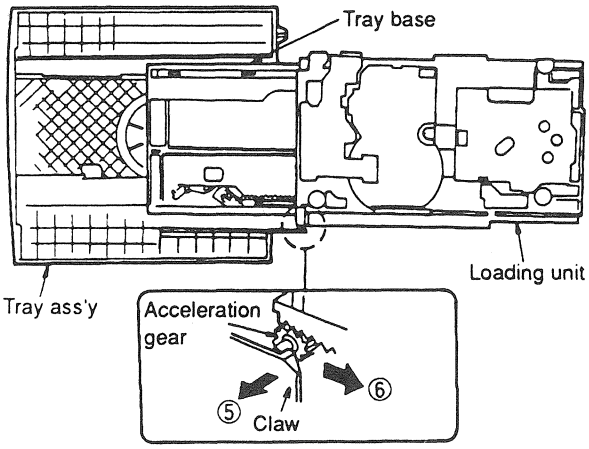

Step 6 Release the claw in the direction of arrow ⑤ and then remove the acceleration gear in the direction of arrow ⑥.

3. Replacement of the Traverse Deck

Step 1 Follow the procedures in 'Checking of the Servo P.C.B.' (step1 ~ step 9).

Step 3 Desolder the 4 motor legs.

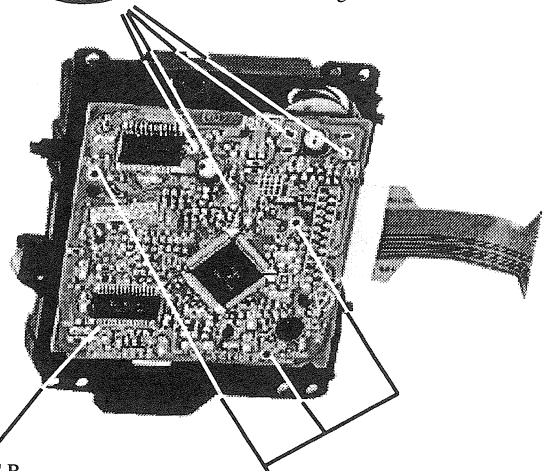

Step 2 b X 3

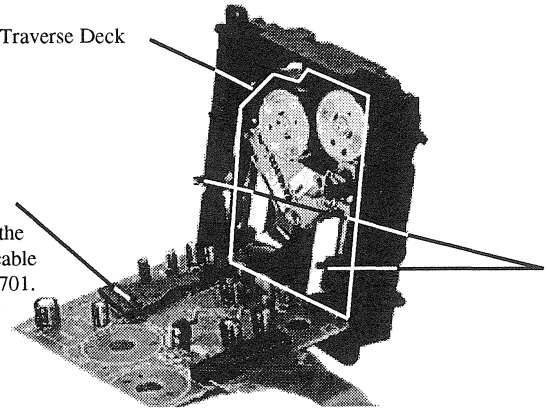

Step 4
Remove the flexible cable from CN701.

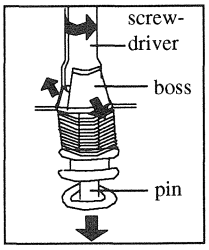

Step 5
Widen the 2 bosses with a screwdriver and pull out the 2 pins. Then remove the Traverse Deck.

a [XTV3+12G-M] (Brass)

b [XTV2+6G] (Brass)

■ Installing Procedure for the Tray Base and Tray Ass'y

Step 1 Install the tray base on the loading unit. (See fig. 1)

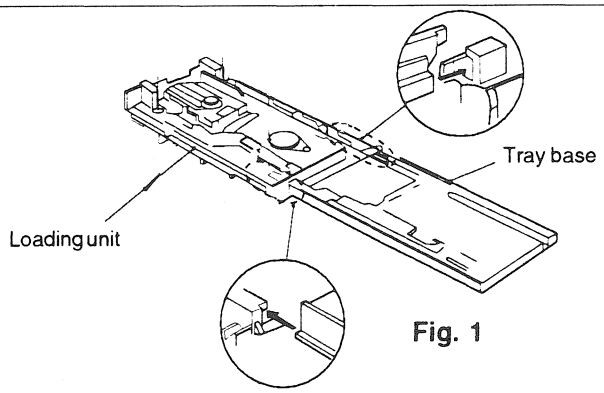

Fig. 1

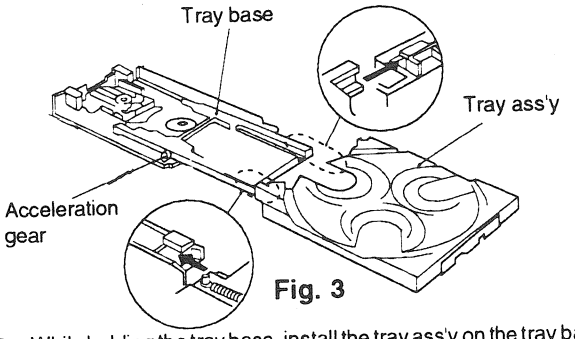

Fig. 3

Step 3 While holding the tray base, install the tray ass'y on the tray base and feed the tray ass'y slowly. (See fig.3)

Step 4 After engaging the acceleration gear, release the tray base which is held and feed the tray ass'y. (See fig.3)

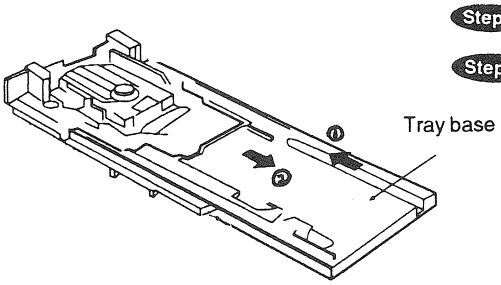

Fig. 2

Step 2 After sliding the tray base in the direction of arrow①, draw the tray base gradually in the direction of arrow②. (See Fig 2.) Slide the tray base until the tray base stops.

■ Digital Servo System

DIGITAL SERVO SYSTEM

This servo system has no adjustment VRs.

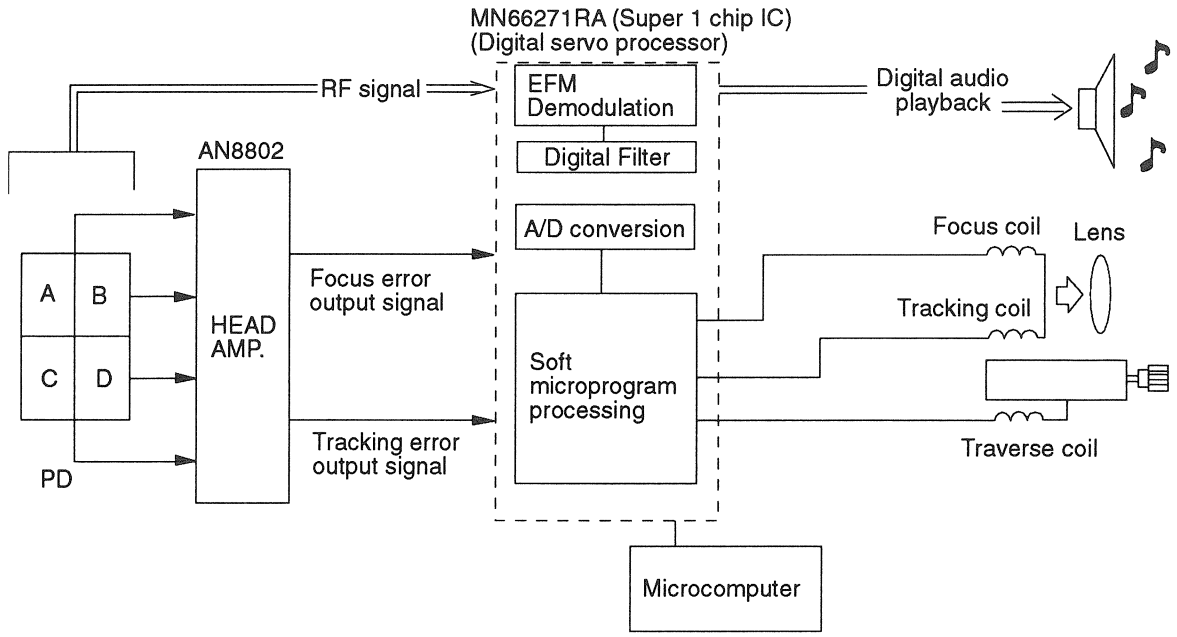

The following flow chart shows the sequence of automatic adjustments.

- **Flow chart on automatic adjustment sequence**

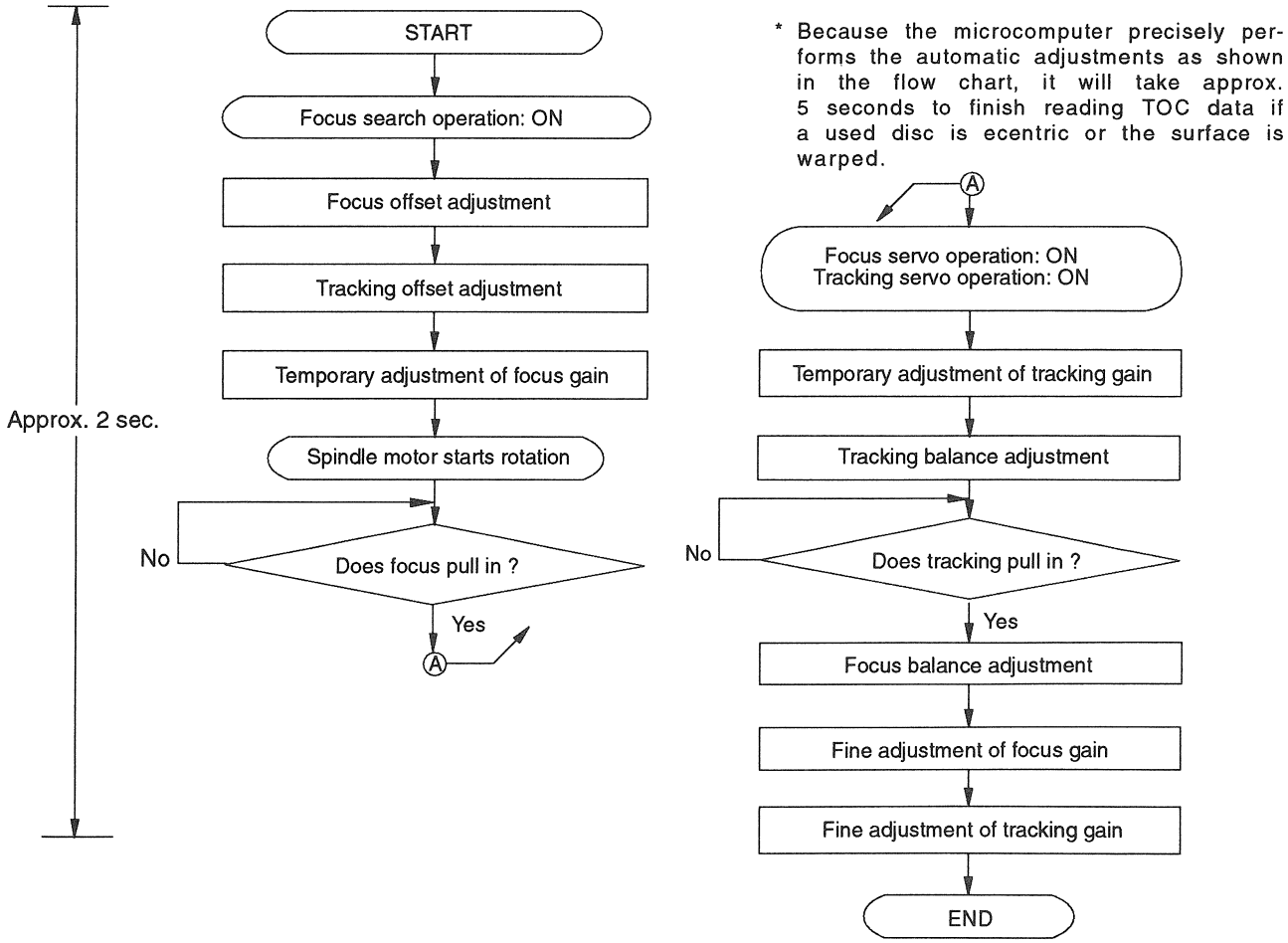

* Because the microcomputer precisely performs the automatic adjustments as shown in the flow chart, it will take approx. 5 seconds to finish reading TOC data if a used disc is ecentric or the surface is warped.

Measurements and Adjustments

CASSETTE DECK SECTION

- Measurement Condition
  - Reverse-mode selector switch : ⇄
  - One touch tape edit : NORMAL
  - Rec timer : OFF
  - Dolby NR : OFF
  - Make sure tape heads, capstan shafts and pinch rollers are clean.
  - Judgeable room temperature 20 ± 5 °C (68 ± 9 °F)

- Measuring instrument
  - EVM (Electronic Voltmeter)
  - Digital frequency counter

- Test tape
  - Head azimuth adjustment (8 kHz, –20 dB); QZZCFM
  - Tape speed adjustment (3 kHz, –10 dB); QZZCWAT
  - Playback gain adjustment (315 Hz, 0 dB); QZZCFM
  - Normal reference blank tape; QZZCRA
  - CrO_2 tape; QZZCRX

• Head Azimuth Adjustment (Deck 1/2)

Caution :

- Please replace both azimuth adjustment screws (RHE5152ZB) and springs (RMB0331) simultaneously when readjusting the head azimuth. (shown in Fig. 2)
  Even if you wish to readjust the head azimuth without replacing the screws and springs, a fine adjustment cannot be done because of the screw-locking bond adhered to the azimuth screw and spring.
- Please remove the screw-locking bond left on the head base when replacing the azimuth screw.
- If you wish to readjust the head azimuth, be sure to adjust with adhering the cassette tape closely to the mechanism by pushing the center of cassette tape with your finger. (shown in Fig. 3)

1. Playback the azimuth adjustment portion (8 kHz, –20 dB) of the test tape (QZZCFM) in the forward play mode. Vary the azimuth adjusting screw until the output of the R-CH (PB OUT-R) are maximized.
2. Perform the same adjustment in the reverse play mode.
3. After the adjustment, apply screwlock to the azimuth adjusting screw.

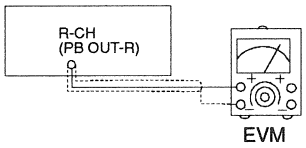

Fig. 1

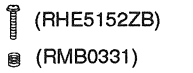

Fig.2

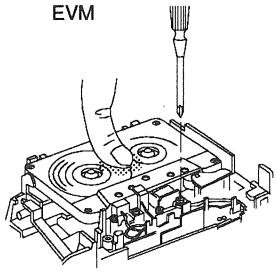

Fig. 3

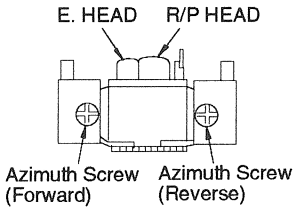

Fig. 4

• Tape Speed Adjustment (Deck 1/2)

1. Set the One touch tape edit button to "NORMAL" position.
2. Insert the test tape (QZZCWAT) to DECK 1 and playback (FWD side) the middle portion of it.
3. Adjust **VR201** (DECK 1) for the output value shown below.

Adjustment target : 2995 ~ 3025 Hz (NORMAL speed)

4. Set the One touch tape edit button to "HIGH" mode.
5. Short-circuit between TP1 and TP2, TP2 and TP3 to set the high speed mode. Playback (FWD side) the middle portion of test tape (QZZCWAT).
6. Assure so that the output from DECK 1 is within the standard value.

Standard value : 5100 ± 210 Hz (HIGH speed)

7. Insert the test tape (QZZCWAT) to DECK 2 and playback (FWD side) the middle portion of it.
8. Adjust **VR203** so that the output frequency of DECK 2 is within **± 40 Hz** of the value of the output frequency of DECK 1.
9. Disconnect the TP1 and TP2, TP2 and TP3 to set the normal speed mode. Set the One touch tape edit button to "NORMAL" mode and playback the test tape (QZZCWAT).
10. Adjust **VR202** (DECK 2) for the output value shown below.

Adjustment target : 2995 ~ 3025 Hz (NORMAL speed)

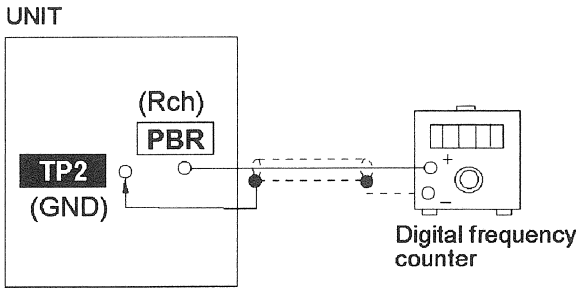

• Bias Frequency Adjustment (Deck 2)

1. Set the unit to "**AUX**" position.
2. Insert the Normal blank tape (QZZCRA) into DECK 2 and set the unit to REC mode (use REC PAUSE" key).
3. Adjust L201 so that the output frequency is within the standard value.

Standard Value : 98 ± 8 kHz

• Playback Gain Adjustment (Deck 1/2)

1. Playback the gain adjusted portion (315Hz, 0dB) of the test tape (QZZCFM).
2. Adjust **VR103** for DECK 2 L-CH (**VR104** for R-CH) and **VR101** for DECK 1 L-CH (**VR102** for R-CH) so that the output is within the standard value.

Standard Value : 388 ± 40 mV

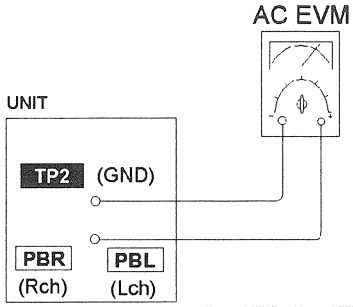

• Bias and Erase Voltage Check

1. Insert the normal tape (QZZCRA).
2. Place cassette deck into REC mode.
3. Measure and make sure that the output is within the standard value.
4. Insert the CrO_2 tape (QZZCRX).
5. Repeat steps 2 and 3.

Bias voltage for Deck 2 (Standard value) :	**15 ± 4mV (Normal)**
	21 ± 5mV (CrO_2)
Erase voltage for Deck 2 (Standard value) :	**more than 60mV (Normal)**
	more than 100mV (CrO_2)

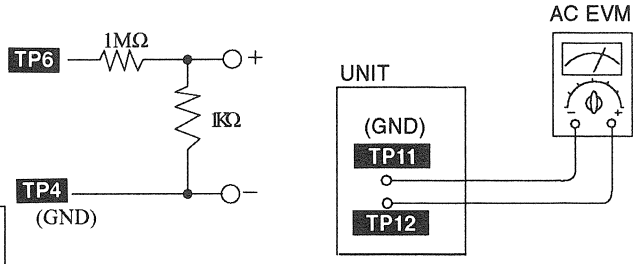

• Alignment Points

<Cassette Deck Section>

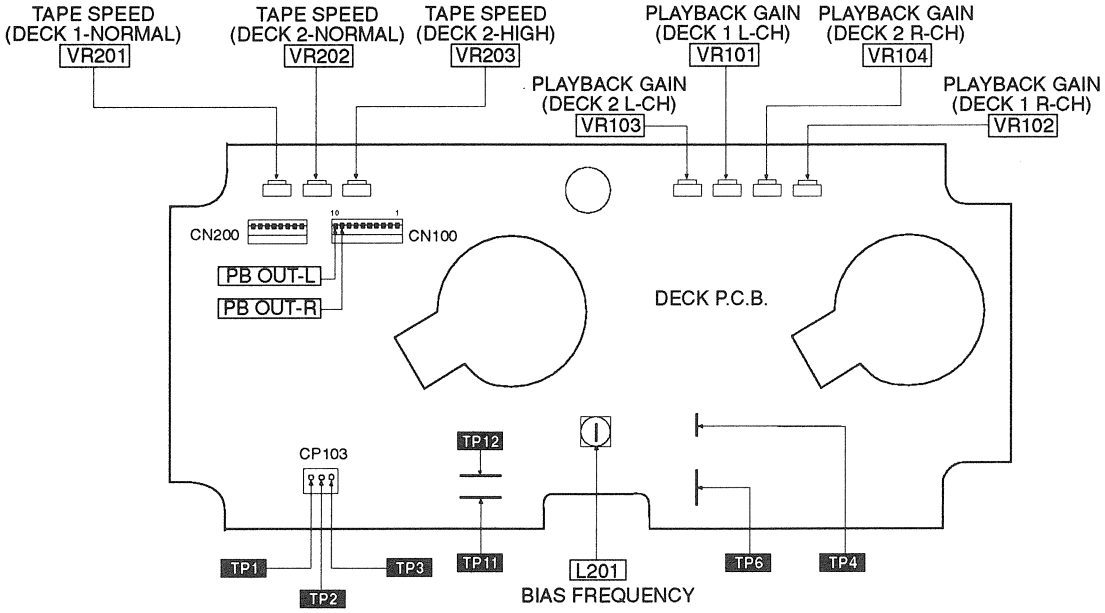

< CD Player Section >

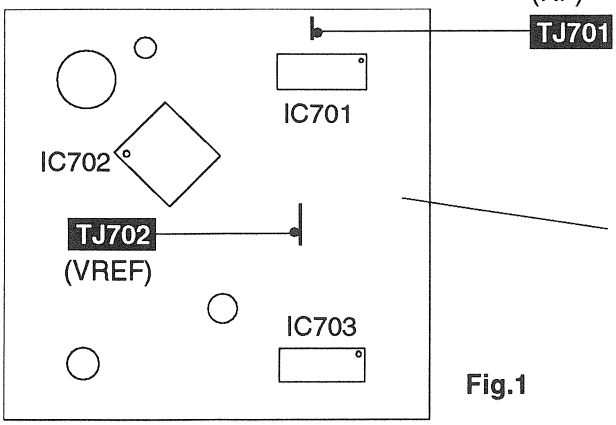

Fig.1

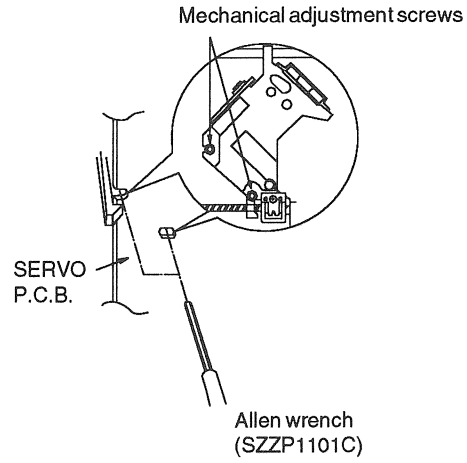

Fig.2

CD Player Section

Warning: This product uses a laser diode. Refer to caution statements on page 3.

Caution: It is very dangerous to look or touch the laser beam. (laser radiation is invisible)
With the unit turned "on", laser radiation is emitted from the pickup lens.
Avoid exposure to the laser beam, especially when performing adjustments.

Measuring Instruments and Special Tools

* Test discs
1. Playability test disc (SZZP1054C).
2. Uneven test disc (SZZP1056C).
* Musical program disc (ordinary).
* Dual-beam oscilloscope with bandwidth of 30 MHz or better (with EXT. trigger and 1 : 1 probe).
* Allen wrench (M2.0) (SZZP1101C).
* Lock paint (RZZ0L01)

(1) MECHANICAL ADJUSTMENT

- When the traverse deck is replaced, making adjustments is not necessary. (The traverse deck ass'y is already adjusted.)
- Make adjustments to improve playability if the traverse deck has not been replaced.

1. Connect the oscilloscope's CH. 1 probe across TJ701 (RF) (+) and TJ702 (V-Ref.) (–) on the servo P.C.B.
   Oscilloscope setting : VOLT .....200mV.
   SWEEP.....0.5μs.
   Input coupling .....AC.
2. Switch the player power **ON**, and play track **19** on the test disc (SZZ1056C).
   (Playing any other track will prevent the HEX screws from being accessed.)
3. Leave the player in play mode.
4. Alternately adjust the HEX screws with the 2.0mm allen wrench (SZZP1101C) until the vertical fluctuation of RF signal is minimized and the eye pattern is most stretched. (Refer to Fig. 2 on page 17)
5. After completing the adjustment, lock the HEX screws with lock paint (RZZ0L01).

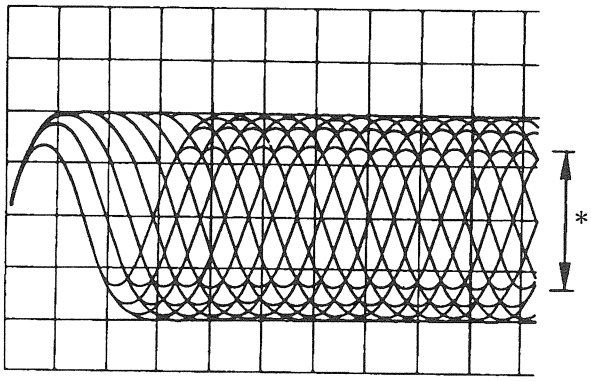

* Most stretched eye pattern

(3) CHECK OF PLAY OPERATION AFTER ADJUSTMENT

*** Checking skip Search**
1. Play an ordinary musical program disc.
2. Press the skip button to check for normal skip search operation (in both the forward and reverse directions).

*** Checking Manual Search**
1. Play an ordinary musical program disc.
2. Press the manual search button to check for smooth manual search operations at either low or high speed (in both the forward and reverse directions).

*** Checking Playability**
1. Play the 0.7mm black dot and the 0.7mm wedge on the test disc (SZZP1054C) and verify that no sound skip or noise occurs.
2. Play the middle tracks of the uneven test disc (SZZP1056C) and verify that no sound skip or noise occurs.

General Inspection

Note : Please use the remote control transmitter with part number EUR643801 when performing the inspection.

FUNCTION	CHECKING	REMARKS
1. To enter TEST MODE.	• Press the "□" (TAPE STOP) key on the SA-CH72 unit, then simultaneously press the (4) key, release (4) and press (7) on the Remote Control Unit.	• The first segment from the left side of FL will display a "D" when test mode is entered.
2. To check for tact switches and FL display connection.	• Press the (7) key on the Remote Control Transmitter. ("D-7" will be displayed) • Press every key on the SA-CH72 unit one by one. • The chart below summarizes the display segment corresponding to each key pressed.	• FL display will have its segment lighted up one by one.
3. To check for tuner auto tuning.	• Press the (1) key on the Remote Control Transmitter. • Press the "⏮/◀◀" or "▶▶/⏭" on the remote control transmitter.	• "D-1" will appear for about 2 seconds and set to tuner mode. • Tuner band will set to FM mode and start to auto tuning on each direction.
4. To exit from TEST MODE.	• Press "POWER" key on the unit or remote control transmitter. • Pull out the Power Supply Plug to set the "COLD START" from the above TEST MODE. (The memory will be set to the initial condition at the next AC power on.)	

Segment Light Up	Key pressed (From unit)	Segment Light Up	Key pressed (From unit)	Segment Light Up	Key pressed (From unit)	Segment Light Up	Key pressed (From unit)
1a	DECK1/2	2b	V. BASS	3b	MEMORY/SET	4b	▶▶/⏭
1b	REC PAUSE	2c	FM MODE/BP	3c	PLAY	4c	DISC 2
1f	REV MODE	2f	MUTE	3f	TUNING/TIME SET	4f	⏮/◀◀
1g	□	2g	SOFT	3g	AUX	4g	▯▯
1h	▶	2h	HEAVY	3h	TUNING MODE	4h	▶
1i	▶▶	2i	CLEAR	3k	AM	4i	□
1j	◀◀	2j	HALL	3l	FM	4j	RANDOM
1k	◀	2k	ON/FLAT	3m	CLOCK/TIMER	4l	EASY EDIT
1l	HIGH	2l	LIVE	3n	REC	4m	DISC 3
1n	NORMAL	3a	TUNING/TIME SET	4a	⏏ OPEN/CLOSE	4n	DISC 1

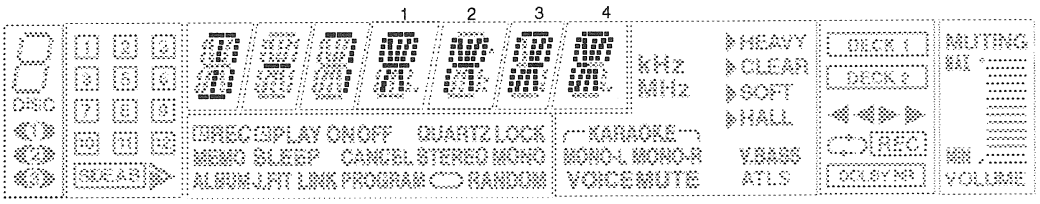

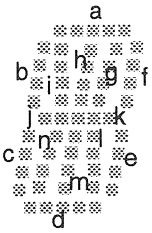

■ Display Functions of Automatically-Adjusted Results (Self-Check Function)

Note : Please use the remote control transmitter with part number EUR643801 when performing the Self-Check Function.

The unit contains a function which displays the result of the automatically adjustment of the servo circuits (tracking, focus servo, etc.) as an error code on the FL display.
The error code display serves as a repair guide showing the automatically adjustment circuit is at fault. The procedures for displaying the error codes are given below.

• Procedures to display the error code

1. Switch the unit to "ON".
2. Press the " □ " (Tape STOP) button, then simultaneously press "4". Release "4" key and press the "7" key.
3. The "**D-0**" will appear on the FL display for 2 seconds and then change to "**CD**"
4. "**E00**" will appear if no error is found.
5. The error code provides a rough indication of which servo circuit is malfunctioning.

• Error code based troubleshooting

• The unit is satisfactory if the error code is **E00**.
• Before testing , make sure that the test disc is free of scratches and dirt and optical pickup is clean.

FL error code display	Symptom	Probable cause	Signal to check		Normal the values of voltage and waveform	
			Signal name	Location	PLAY	STOP
E01	Focus and tracking offset adjustments did not complete in the specified time period.	① Clocks X1 and X2, power supply VDD, and reset/RST, all on IC702. ② MDATA, MCLK, MLD and SENSE signals to/from the mechanism controller.	MDATA	IC702 ⑧ pin	PLAY 4.8V 0V T=13.6 ms	4.8V
			MCLK	IC702 ⑦ pin	PLAY 4.8V 0V T=13.6 ms	4.8V
			MLD	IC702 ⑨ pin		
			SENSE	IC702 ⑩ pin	0V	0V
			/RST	IC702 ⑱ pin	4.9V	4.9V
			X1	IC702 ⑤⑧ pin	1.1V p-p F=16.9344 MHz	1.1V p-p F=16.9344 MHz
			X2	IC702 ⑤⑨ pin	4.8V p-p F=16.9344 MHz	4.8V p-p F=16.9344 MHz
E03 E05 E07 E09 E0B E0D E0F	Disc play unstable	① Scratches or contaminants on disc surface. ② Focus and tracking servo circuits (check waveforms, voltage, and part constants). ③ Spindle driver circuit. ④ Optical pickup.	FE	IC702 ③② pin	PLAY 0.3V p-p 2ms 0.1V/DIV	2.4V
			TE	IC702 ③③ pin	PLAY 0.4V p-p 2ms 0.1V/DIV	2.4V
			FOD	IC702 ②⑧ pin	2.4V	2.4V
			TRD	IC702 ②⑦ pin	2.4V	2.4V
			KICK	IC702 ②⑥ pin	2.4V	2.4V
			/FLOCK	IC702 ⑪ pin	0V	4.9V
			/RF DET	IC702 ③⑧ pin	0V	4.8V
			RF	TJ701	PLAY 1.2V p-p 0.5μs 0.1V/DIV	3.4V
			STAT	IC702 ⑰ pin	3.5V	0V
E04 E06 E0C E0E	Best Eye (PD Balance) adjustment did not complete in specified time period.	① Scratches or contaminants on disc surface. ② Focus and tracking servo circuits (check waveforms, voltage, and part constants). ③ Optical pickup.	FBAL	IC702 ③⓪ pin	2.5 ± 1.25V	2.5 ± 1.25V
			RF	TJ701	PLAY 1.2V p-p 0.5μs 0.1V/DIV	3.4V
			FE	IC702 ③② pin	PLAY 0.3V p-p 2ms 0.1V/DIV	0V
			/TLOCK	IC702 ⑫ pin	0V	0V
			OFT	IC702 ③⑥ pin	0V	0V
E08 E0A	Focus or tracking gain adjustment did not complete in the specified time period.	① Scratches or contaminants on disc surface. ② Focus and tracking servo circuits (check waveforms, voltage, and part constants). ③ Optical pickup.	FE	IC702 ③② pin	PLAY 0.3V p-p 2ms 0.1V/DIV	2.4V
			TE	IC702 ③③ pin	PLAY 0.4V p-p 2ms 0.1V/DIV	2.4V
			/TLOCK	IC702 ⑫ pin	0V	0V
			OFT	IC702 ③⑥ pin	0V	0V

Self-Diagnostic Display Function

Self-diagnostic display

This unit is equipped with a self-diagnosis display function which, if a problem occurs, will display an error code corresponding to the problem. Use this function when performing maintenance on the unit.

Preparation

* Normal blank tape with recording prevention tab on one side.
* Normal pre-recorded tape with data on both sides and recording prevention tabs intact.

How to enter the Self-Diagnostic Function.

POWER — Turn the unit on with no cassette in both deck.

↓

□ — Press and hold the "STOP" button for at least 2 seconds.

↓

□ ▶▶ — While pressing the "STOP" button, press "FF" button for at least 2 seconds.

↓

"T" will appear on the FL display.
(unit is in the Self-Diagnostic Function.)

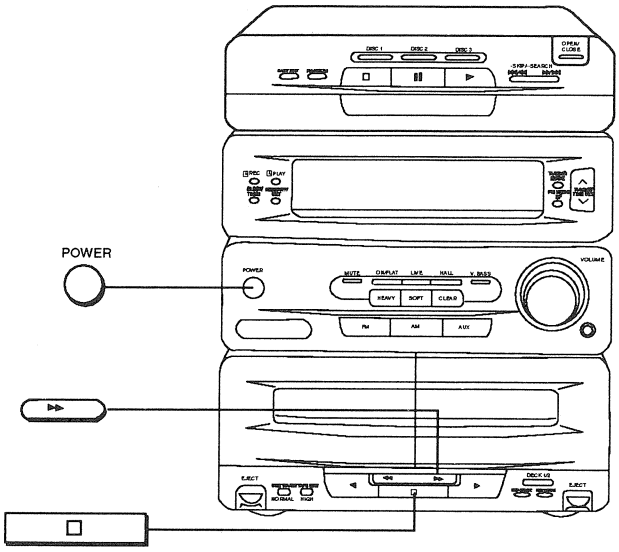

Cassette Deck Test

1. Press "DECK 1/2" button to select DECK 2.
2. Load the normal blank tape into DECK 2. (Recording prevention tab at the left hand side)
3. Press the "FF" (▶▶) button. (Tape will fast forward for about 2 seconds and stop automatically)
4. Press the "REW" (◀◀) button. (Tape will rewind for about 2 seconds and stop automatically.)
5. Remove the tape from DECK 2.
6. Load the normal pre-recorded tape into DECK 2.
7. Press "PLAY" (▶). (TPS function starts and will stop automatically.)
8. Press "REC PAUSE" button. (The mechanism should not move.)
9. Remove the cassette tape.
10. Press "DECK 1/2" button to select DECK 1.
11. Repeat steps 2 ~ 9.

- **To Display Self-Diagnostic Result**

1. Press "DECK 1/2" button to select the deck require.
2. Press "STOP" (□) button. (Error code will appear if there is any malfunction.)
   * If several problem exist, error code will change each time you press "STOP" button.
   (e.g.. HO2 → H03 → F01....H02....etc.)
   * If no problem, "T" will remain unchange.

CD Changer Test (F15 ~ F26)

1. Press "SKIP/SEARCH" (▶▶/▶▶|) button. (Self-Diagnostic function will perform for 25 seconds.)

- **To Display Self-Diagnostic Result**

1. Press Deck 1 "STOP" (□) button.
   * If several problem exist, error code will change each time you press "STOP" button.
   (e.g.. HO2 → H03 → F01....H02....etc.)
   * If no problem, "T" will remain unchange.

Power Amplifier Test (F61)

* When the power is ON, F61 will display for 3 seconds and OFF automatically.

How to Get out From Self-Diagnostic Function

1. For error codes other than F61:
   * Press the "POWER" button to switch off the unit.
2. For F61 error code :
   * The unit remain OFF until the fault is fixed.

To Display Error Code Again

* Follow the steps on "How to enter the Self-Diagnostic Function" and press the deck "STOP" (□) button. (Except F61)

How To Clear The Error Code From Memory

(These error codes are stored in memory and must be cleared when the fault has been fixed.)

1. Press the "STOP" (□) button for at least 5 second while the error code is displayed.
2. "CLEAR" will be displayed for 1 second and replace with "T".
3. Turn off the unit.

Interpretation of error codes

Error code	Problem condition	Correction procedure
H01	Faulty operation of cassette mechanism. Example: Reverse-play operation performs when FWD button is pressed.	Faulty cassette mechanism mode switch [S951, S971] and plunger. (Check and replace)
H02	Recording not possible, or recording mode entered even though erasure prevention tabs have been removed.	Faulty contact or short-circuit of erasure prevention switches [S973, S974]. (Check and replace)
H03	Playback not performed when Play (◀▶) button is pressed. Motor turns when Play (◀▶) button is pressed even though there is no tape cassette loaded in cassette holder.	Faulty contact or short-circuit of cassette half detect switch. [S972] (Check and replace)
F01	When the Play (◀▶) button is pressed, the tape advances slightly and then stops.	Faulty reel pulse, faulty hole detect IC. [IC951, IC971] (Check and replace)
F02	Cassette deck will not perform TPS function.	Faulty playback EQ/recording amplifier IC. [IC101] (Check and replace)
F15	Relatively long time (about 8 seconds) is required to begin play when the CD Play (▶) button is pressed from the power-off state or from a function other than CD player.	Faulty contact on CD mechanism optical pick-up rest switch [S701]. (Check and replace)
F16	CD traverse "UP" switch faulty. e.g. CD traverse push up the rotary tray.	Faulty contact on switch S501. (Check and replace)
F17	CD traverse "DOWN" switch faulty. e.g. Tray open.	Faulty contact on switch S501. (Check and replace)
F18	Faulty tray rotational detection. e.g. Tray does not stop at initial position.	Faulty optical sensor. (Check D503 and replace)
F19	Rotary tray does not move.	Faulty optical sensor or motor. (Check D502 and replace)
F20	Faulty loading motor rotation detection. e.g. Tray rotates forward or reverse continuously or open and close repeatedly.	Faulty optical sensor. (Check D502 and replace)
F21	Loading motor rotate in reverse direction. e.g. Tray rotates forward or reverse continuously or open and close repeatedly.	Faulty motor instruction or loading circuit of IC, transistor. (Check and replace)
F22	Faulty loading motor or loading mechanism. e.g. Tray doesn't move even "PLAY" (▶) button is pressed. No loading operation when "⏏ OPEN/CLOSE" button is pressed.	Faulty motor or loading mechanism parts. (Check and replace)
F23	Rotary tray does not move or keep rotating.	Faulty solenoid or drive circuit. (Check drive transistor Q314, Q315 and solenoid)
F24	Faulty "Half open switch". e.g. When tray open during play, tray become full open condition.	Faulty "Half open switch" (Check S502 and replace)
F25	Faulty "Full open switch" e.g. Tray closes automatically after 3 ~ 4 seconds.	Faulty "Full open switch" (Check S502 and replace)
F26	CD does not function even when pressing Play (▶) button. CD track jumps. CD rotates irregularly.	Faulty system contact (IC900) or servo processor (IC702). (Check and replace) Faulty connection or broken of FPC for CD circuit. (Check and replace)
F61	When power is switched on it automatically switches immediately back off, and cannot be switched on. (Faulty speaker output IC is causing DC voltage to be output to speakers.)	Faulty speaker output IC (IC501). (Check and replace)
F75	"NO DISC" indication show in the FL display even CD is loaded.	Faulty power circuit of CD (IC501 or circuit for power supply) (Check and replace) Faulty servo processor IC (IC702). (Check and replace)

NOTE :

* For the cassette deck to perform the TPS (tape progarm sensor) functin, there must be black spaces with no signal recorded between the programs on the tape, so the followig types of recorded tapes cannot be used.

- Tape on which the blank space between programs is less than 4 seconds long.
- Tapes on which there is no unrecorded black spaces (such as a tape recorded using a microphone).
- When there are very low-level or silent sections within a program (such as some classical music recordings).
- When less than 10 seconds have passed after the start of the program or when there is less than 10 secomds remaining until the start of the next program.
- When the recording has bee made using a fade-in (gradually increasing level) or fade-out (gradually decreasing level).

■ Terminal Functions Of ICs

• IC701 (AN8802SCE1V) Servo Amplifier

Pin No.	Mark	I/O	Function
1	PDAD	I	PDA channel signal input with delay
2	PDA	I	PDA channel signal input without delay
3	LPD	I	Laser PD connection
4	LD	O	Power supply for LD driving
5	AMPI	I	RF amplifier input
6	VCC	I	Power supply connection
7	AMPO	O	RF amplifier output (Not used, open)
8	CAGC	I	AGC loop filter connection
9	ARF	O	RF AGC output
10	CENV	I	Capacitor connection for RF detection
11	CEA	I	Capacitor connection for HPF amplifier
12	GND	—	Ground connection
13	LDON	I	ON/OFF input of LD APC("H" : ON, "L" : OFF)
14	TES	I	Tracking error shunt signal input
15	PLAY	I	Play signal input ("H" : PLAY)
16	WVEL	I	Double speed ("H" : double, "L" : single)

Pin No.	Mark	I/O	Function
17	BDO	O	Dropout detection control
18	/RFDET	O	RF detection signal ("L" : detection)
19	CROSS	O	Tracking error zero cross output
20	OFTR	O	Off-track detection ("H" : detection)
21	VDET	O	Vibration detection signal output("H" : detection)
22	ENV	O	Envelope output terminal
23	TEBPF	I	Vibration detection signal input
24	TE	O	Tracking error signal output
25	FE	O	Focus error signal output
26	PTO	O	Potentioamplifier inversion input (Not used, open)
27	PTI	I	Potentioamplifier inversion output (Not used, open)
28	TBAL	I	Tracking balance signal input
29	FBAL	I	Focus balance signal input
30	VREF	O	Reference voltage output
31	PDB	I	Photo detection Bch input without delay
32	PDBD	I	Photo detection Bch input with delay

• IC703 (AN8389SE1) Focus coil / Tracking coil / Traverse motor / Spindle motor driver

Pin No.	Mark	I/O	Function
1	VCC	I	Power supply terminal
2	VREF	I	Reference voltage input
3	IN4	I	Motor driver (4) input
4	IN3	I	Motor driver (3) input
5	GND	—	Ground connection
6	NC	—	Ground connection
7	NRESET	I	Reset input
8	GND	—	Ground connection
9	IN2	I	Motor driver (2) input
10	PC2	I	PC2 (power cut) input
11	IN1	I	Motor driver (1) input
12	PC1	I	PC1 (power cut) input (Not used, open)

Pin No.	Mark	I/O	Function
13	PVCC1	I	Power supply (1) for driver
14	PGND1	—	Ground connection (1) for driver
15	D1–	O	Motor driver (1) reverse-action output
16	D1+	O	Motor driver (1) forward-action output
17	D2–	O	Motor driver (2) reverse-action output
18	D2+	O	Motor driver (2) forward-action output
19	D3–	O	Motor driver (3) reverse-action output
20	D3+	O	Motor driver (3) forward-action output
21	D4–	O	Motor driver (4) reverse-action output
22	D4+	O	Motor driver (4) forward-action output
23	PGND2	—	Ground connection (2) for driver
24	PVCC2	I	Power supply (2) for driver

• IC702 (MN66271RA) Servo processor / Digital signal processor / Digital filter / D/A converter

Pin No.	Mark	I/O	Function
1	BCLK	O	Serial bit clock terminal (Not used, open)
2	LRCK	O	L/R discriminating signal (Not used, open)
3	SRDATA	O	Serial data (Not used, open)
4	DVDD1	I	Power supply (digital circuit) terminal
5	DVSS1	—	GND (digital circuit) terminal
6	TX	O	Digital audio interface signal
7	MCLK	I	Microprocessor command clock signal
8	MDATA	I	Microprocessor command data signal
9	MLD	I	Microprocessor command load signal
10	SENSE	O	Sense signal output
			(OFT,FESL,MAGEND,NAJEND,POSAD,SFG)
11	/FLOCK	O	Optical servo condition(focus)("L" : lead-in)
12	/TLOCK	O	Optical servo condition(tracking)("L" : lead-in)
13	BLKCK	O	Sub-code block clock (f=75Hz)
14	SQCK	I	External clock signal input for sub-code Q
			register.
15	SUBQ	O	Sub-code Q code output
16	DMUTE	I	Muting input ("H" : mute)
17	STAT	O	Status signal output
			(CRC,CUE,CLVS,TTSTVP,FCLV,SQCK)
18	/RST	I	Reset input
19	SMCK	O	1/2-divided clock signal of crystal oscillating at
			MSEL = "H" (fSMCK=8.4672MHz)
			1/4-divided clock signal of crystal oscillating at
			MSEL="L" (fSMCK=4.2336MHz)
20	PMCK	O	1/192-divided clock signal of crystal oscillating
			(fPMCK=88.2kHz) (Not used, open)
21	TRV	O	Traverse servo control output
22	TVD	O	Traverse drive signal output
23	PC	O	Spindle motor ON signal output ("L" : ON)
24	ECM	O	Spindle motor drive signal output
			(forced mode output)
25	ECS	O	Spindle motor drive signal output
			(servo error signal output)
26	KICK	O	Kick pulse output
27	TRD	O	Tracking drive output
28	FOD	O	Focus drive output
29	VREF	I	D/A (drive) output (TVD,ECS,TRD,FOD,
			FBAL,TBAL) Reference voltage input.
30	FBAL	O	Focus balance adjustment output
			(Not used,open)
31	TBAL	O	Tracking balance adjustment output
32	FE	I	Focus error signal input (analog input)
33	TE	I	Tracking error signal input (analog input)
34	RFENV	I	RF envelope signal input
35	VDET	I	Vibration detection signal input ("H" : detection)

Pin No.	Mark	I/O	Function
36	OFT	I	Off-track signal input ("H" : off track)
37	TRCRS	I	Track cross signal input
38	/RFDET	I	RF detection signal input ("L" : detection)
39	BDO	I	Dropout signal input ("H" : Dropout)
40	LDON	O	Laser on signal output ("H" : ON)
41	TES	O	Tracking error shunt signal output ("H" : shunt)
42	PLAY	O	Play signal out ("H" : PLAY)
43	WVEL	O	Double speed status signal output ("H" : DS)
44	ARF	I	RF signal input
45	IREF	I	Reference current input
46	DRF	I	DSL bias (Not used, open)
47	DSLF	I/O	DSL loop filter
48	PLLF	I/O	PLL loop filter
49	VCOF	I/O	VCO loop filter (Not used, open)
50	AVDD2	I	Power supply input (for analog circuit)
51	AVSS2	—	GND (for analog circuit)
52	EFM	O	EFM signal output (Not used, open)
53	PCK	O	PLL extraction clock ouput (Not used, open)
			(fPCK=4.321 MHz during normal playback)
54	PDO	O	Phase comparison signal of EFM and PCK signals
			(Not used, open)
55	SUBC	O	Sub-code serial data output (Not used, open)
56	SBCK	I	Sub-code frame clock signal output
			(fCLDCK=7.35kHz during normal playback)
57	VSS	—	GND
58	X1	I	Crystal oscillating circuit input (f=16.9344MHz)
59	X2	O	Crystal oscillating circuit output (f=16.9344MHz)
60	VDD	I	Power supply input (for oscillating circuit)
61	BYTCK	O	Byte clock output (Not used, open)
62	/CLDCK	O	Clock input for sub-code serial data
			(Not used, open)
63	FCLK	O	Crystal frame clock signal output
			(fCLK=7.35kHz, double=14.7kHz)
64	IPFLAG	O	Interpolation flag output ("H" : interpolation)
			(Not used, open)
65	FLAG	O	Flag output (Not used, open)
66	CLVS	O	Spindle servo phase synchronizing signal output
			("H" : CLV, "L" : rough servo) (Not used, open)
67	CRC	O	Sub-code CRC checked output
			("H" : OK, "L" : NG) (Not used, open)
68	DEMPH	O	De-emphasis ON signal output
			("H" : ON) (Not used, open)
69	RESY	O	Frame resynchronizing signal output
			(Not used, open)
70	/RST2	I	Reset input through MASH circuit ("L" : Reset)
71	/TEST	I	Test input

Pin No.	Mark	I/O	Function
72	AVDD1	I	Power supply input (for analog circuit)
73	OUTL	O	Left channel audio signal output
74	AVSS1	—	GND
75	OUTR	O	Right channel audio signal output
76	RSEL	I	RF signal polarity assignment input
			(at "H" level, RSEL="H", at "L" level, RESL="L")
77	CSEL	I	Crystal oscillating frequency designation input

Pin No.	Mark	I/O	Function
			"L" : 16.9344MHz "H" : 33.8688MHz
78	PSEL	I	Test input (normally "L") (Not used, open)
79	MSEL	I	Output mode switching of SUBQ terminal
			("H" : Q code buffer mode)
80	SSEL	I	Output frequency switching for SMCK terminal
			"H" : SMCK=8.4672MHz
			"L" : MCK=4.2336MHz (Not used, open)

• IC900 (M38197MA107) System Microprocessor

Pin No.	Mark	I/O	Function
1	DECK3	I	Recording inhibit detection
2	DECK2	I	Cassette hole/mode/half detection (Deck 1).
3	DECK1	I	Cassette hole/mode/half detection (Deck 2).
4	CRT	—	CR Timer detection.
5~8	KEY4 ~ KEY1	I	Key switch detection.
9	STEREO	I	Stereo detection.
10	DA	O	Electric volume control outputsignal.
11	SD	I	Tuner signal receiving detection.
12	DO	I	PLL synthesizer control signal input.
13	PLLCE	O	PLL tuner strobe signal output.
14	PLLDI	O	PLL tuner setting data output.
15	PLLCK	O	PLL tuner setting clock output.
16	SENSE	I	CD sense signal input.
17	STATUS	I	STATUS signal input.
18	FLOCK	I	Focus servo on signal input.
19	TLOCK	I	Focus servo on signal input.
20	SQCK	O	Subcode Q clock for resistor output.
21	NC	—	No connection.
22	SUBQ	I	Subcode Q loading signal input.
23	MCLK	O	Micorprocessor command clock output.
24	MDATA	O	Microprocessor command data output.
25	CDG	–	No connection.
26	MLD	O	Microprocessor command loading signal output.
27	CDRST	I	Reset for CD player input.
28	DMUTE	O	Muting control signal output.
29	RESISW	I	Rest detection input.
30	BLKCK	I	Subcode clock input.
31	RMT	I	Remote contrl signal input.
32	DCDET	I	DC detection.
33	P.CONT	O	Power control signal input.
34	HALT	I	Power down detection input.
35	RESET	I	Reset input.
36	XC IN	O	Crystal oscillator output.
37	XC OUT	I	
38	XIN	I	Clock frequency signal oscillator in (6 MHz).

Pin No.	Mark	I/O	Function
39	XOUT	O	Clock frequency signal oscillator out (6 MHz).
40	VSS	—	GND
41	MBP1	O	Crystal control output.
42	MBP2	O	Crystal control output.
43	CDGM	O	CD graphic muting.
44	CDGR	O	CD graphic reset.
45	SLA	O	Data writing trigger out.
46	SDA	O	Serial data out.
47	SCK	O	Serial data carrier clock out.
48	MKDA	O	Cassette deck control data out.
49	MACK	O	Cassette deck control clock signal output.
50	AFDA	O	Audio control data output.
51	AFCK	O	Audio control clock signal output.
52~64	DIG13~DIG1	O	FL digit signal output.
65~80	SEG1~SEG16	O	FL segment signal out.
81~83	R3~R1	—	not use.
84	MIC	I	Mic input detection out.
85	SURLED	O	LED drive to surround.
86	SOL	O	Solenoid drive signal out.
87	FWD	O	Motor forward control.
88	REV	O	Motor reverse control.
89	JOGB	I	JOG dial signal input B.
90	JOGA	I	JOG dial signal input A.
91	VCC	I	Power input.
92	PSIN	I	Photo senser signal input.
			(Rotary position detection)
93	PHO	I	Photo senser signal input.
			(Speed detection)
94	FOPN	I	Tray fully open detection signal input.
95	HOPN	I	Tray half open detection signal input.
96	UP	I	Traverse up detection input.
97	DOWN	O	Traverse down detection input.
98	VEE	I	Power input.
99	VSS	—	GND
100	VREF	I	Reference input.

■ Terminal Guide of ICs, Transistors and Diodes

AN8389SE1	AN8802SCE1V (32P) BU2040F-E2 (16P) BU2090F-E2 (16P) BU4052BCF-E2 (16P) BU4066BCF-E2 (14P) CXA1102M-T4 (16P) M51167BFP-E1 (36P)		M62426FP-E1	LA1832A LC7218	M38197MA107 (100P) MN66271RA (80P)
BA7755A	M51131L-702	BA4558FDXE2	BA6218	DN6851ALB	AN78M05
SVI3101D	2SK544F-AC	2SC2784FTA 2SD1450STA	2SK301QTA	2SJ40CDTA	2SB709S
2SC2785FETA 2SC2786MTA 2SC2787FL1TA 2SC2787LTA 2SD1020HTA		2SB621RTA 2SB621ARTA 2SC2001KTA 2SD965RTA		2SB1185E 2SD1762E	2SD2037ETA
2SA933SSTA 2SC1740SLNET 2SC1740SSTA RVTDTA114EST RVTDTA143XST	RVTDTC114TST RVTDTC124EST RVTDTC143EST RVTDTC144EST RVTDTC144TST		1SS291TA MA165TA RVD1SS133TA	1N5402BM21 1D3E	SLR38DCTD0
MTZJ5R1CTA MTZJ6R2CTA MTZJ8R2CTA RVDMTZ10BTA RVDMTZ12BTA	RVDMTZ15CTA RVDMTZ3R6BTA RVDMTZ4R7BTA RVDMTZ6R8BTA RVDMTZ7R5BTA		SVC211SPA-AL	GL380TB PT381TB	RSQGP1S53V

Wiring Connection Diagram

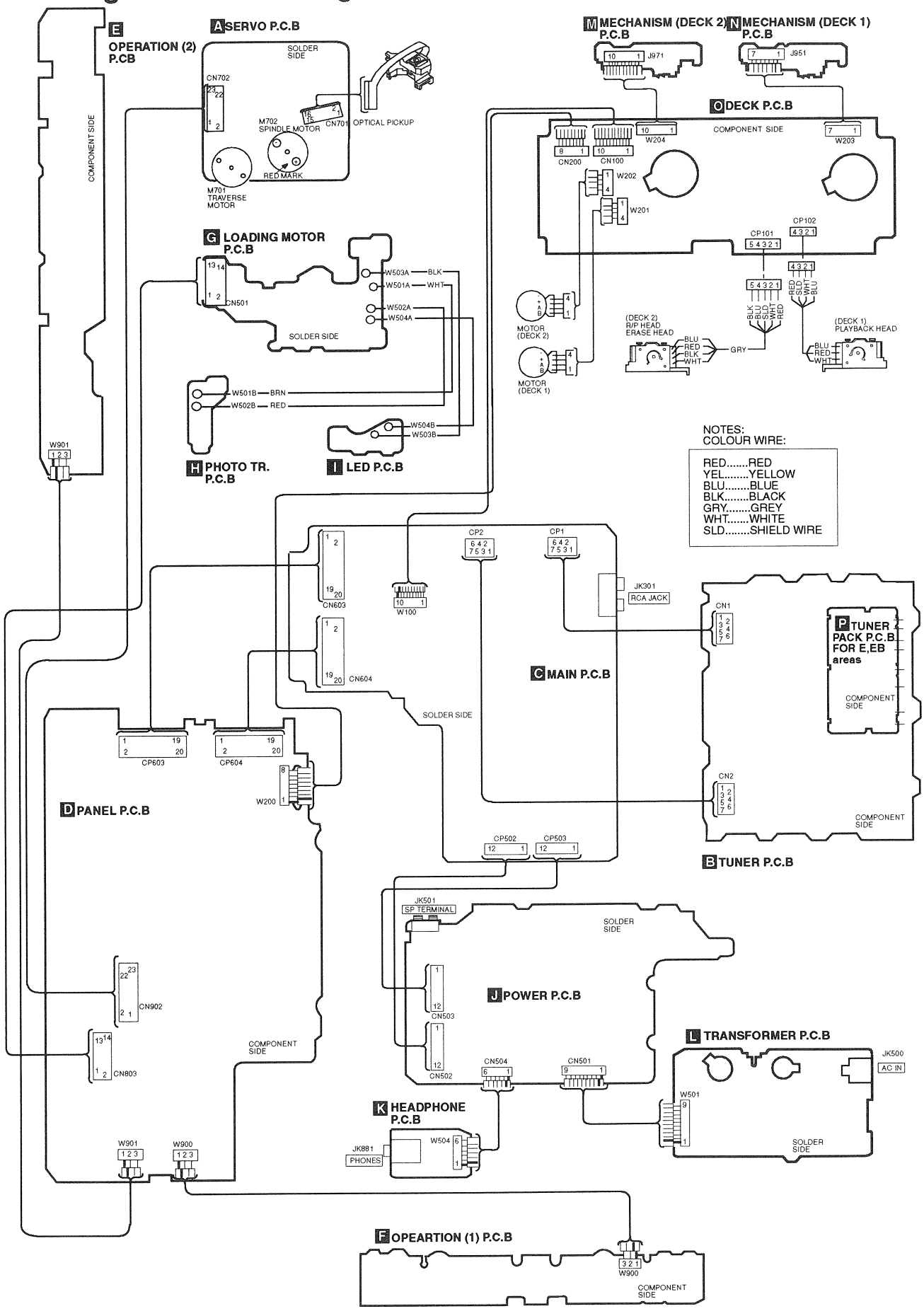

Block Diagram

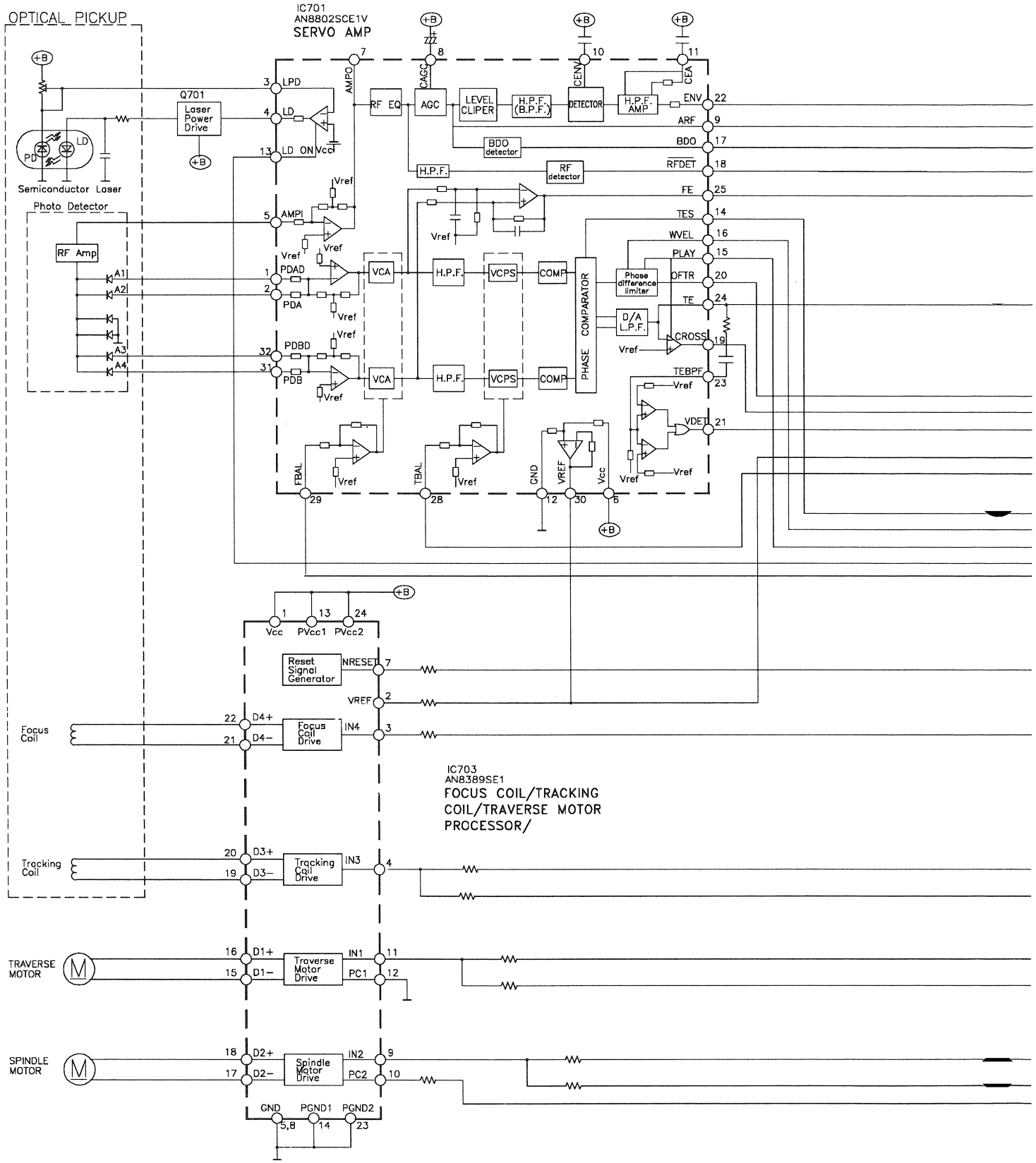

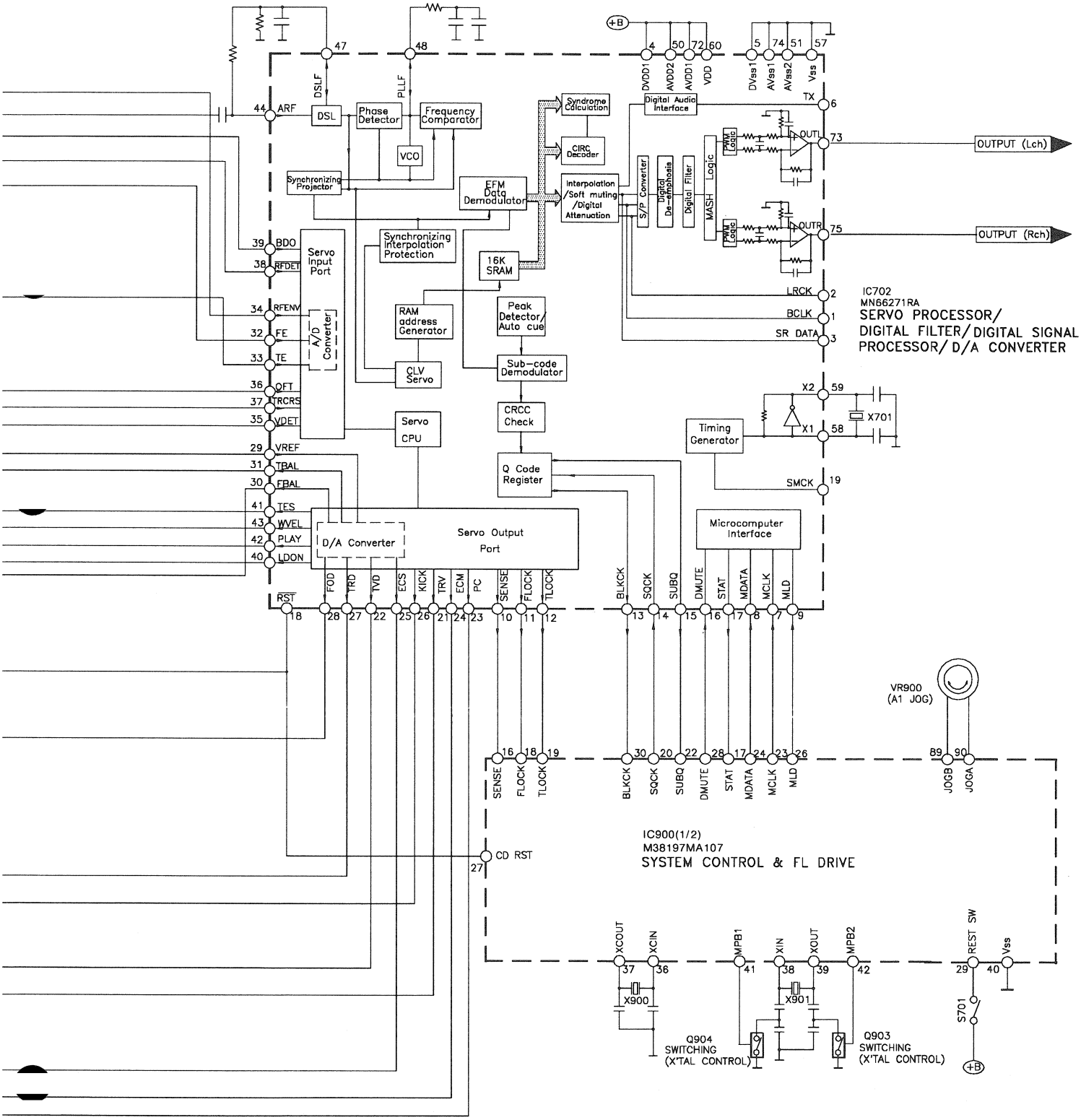
IC702
MN66271RA
SERVO PROCESSOR/
DIGITAL FILTER/DIGITAL SIGNAL
PROCESSOR/ D/A CONVERTER
OUTPUT (Lch)
OUTPUT (Rch)
Servo Input Port
A/D Converter
Servo CPU
Servo Output Port
D/A Converter
Phase Detector
Frequency Comparator
VCO
DSL
Synchronizing Projector
EFM Data Demodulator
Synchronizing Interpolation Protection
16K SRAM
RAM address Generator
Peak Detector/ Auto cue
CLV Servo
Sub-code Demodulator
CRCC Check
Q Code Register
Syndrome Calculation
CIRC Decoder
Interpolation /Soft muting /Digital Attenuation
Digital Audio Interface
S/P Converter
Digital De-emphasis
Digital Filter
MASH Logic
PWM Logic
Timing Generator
Microcomputer Interface
VR900
(A1 JOG)
IC900(1/2)
M38197MA107
SYSTEM CONTROL & FL DRIVE
CD RST
Q904
SWITCHING
(X'TAL CONTROL)
Q903
SWITCHING
(X'TAL CONTROL)
X900
X901
X701
S701
REST SW

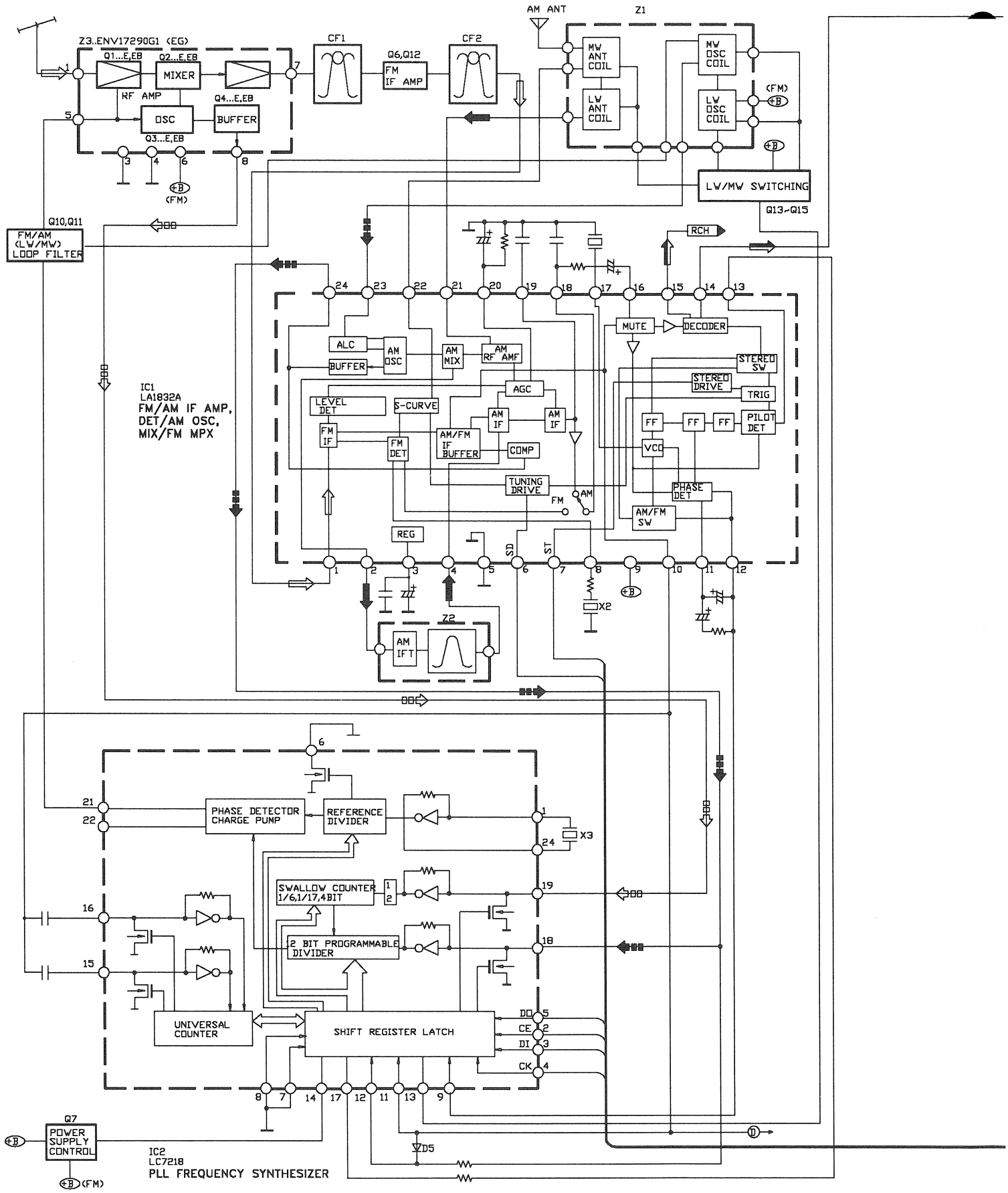
Z3..ENV17290G1 (EG)
Q1...E,EB
Q2...E,EB
MIXER
RF AMP
OSC
Q4...E,EB
BUFFER
Q3...E,EB
(FM)
CF1
Q6,Q12
FM IF AMP
CF2
AM ANT
Z1
MW ANT COIL
LW ANT COIL
MW OSC COIL
LW OSC COIL
LW/MW SWITCHING
Q13~Q15
Q10,Q11
FM/AM (LW/MW) LOOP FILTER
RCH
IC1
LA1832A
FM/AM IF AMP, DET/AM OSC, MIX/FM MPX
ALC
AM OSC
BUFFER
AM MIX
AM RF AMF
AGC
LEVEL DET
S-CURVE
AM IF
FM IF
FM DET
AM/FM IF BUFFER
COMP
TUNING DRIVE
MUTE
DECODER
STEREO SW
STEREO DRIVE
TRIG
FF
PILOT DET
VCO
PHASE DET
AM/FM SW
REG
SD
ST
X2
Z2
AM IFT
PHASE DETECTOR CHARGE PUMP
REFERENCE DIVIDER
X3
SWALLOW COUNTER 1/6,1/17,4BIT
12 BIT PROGRAMMABLE DIVIDER
UNIVERSAL COUNTER
SHIFT REGISTER LATCH
DO
CE
DI
CK
Q7
POWER SUPPLY CONTROL
D5
IC2
LC7218
PLL FREQUENCY SYNTHESIZER

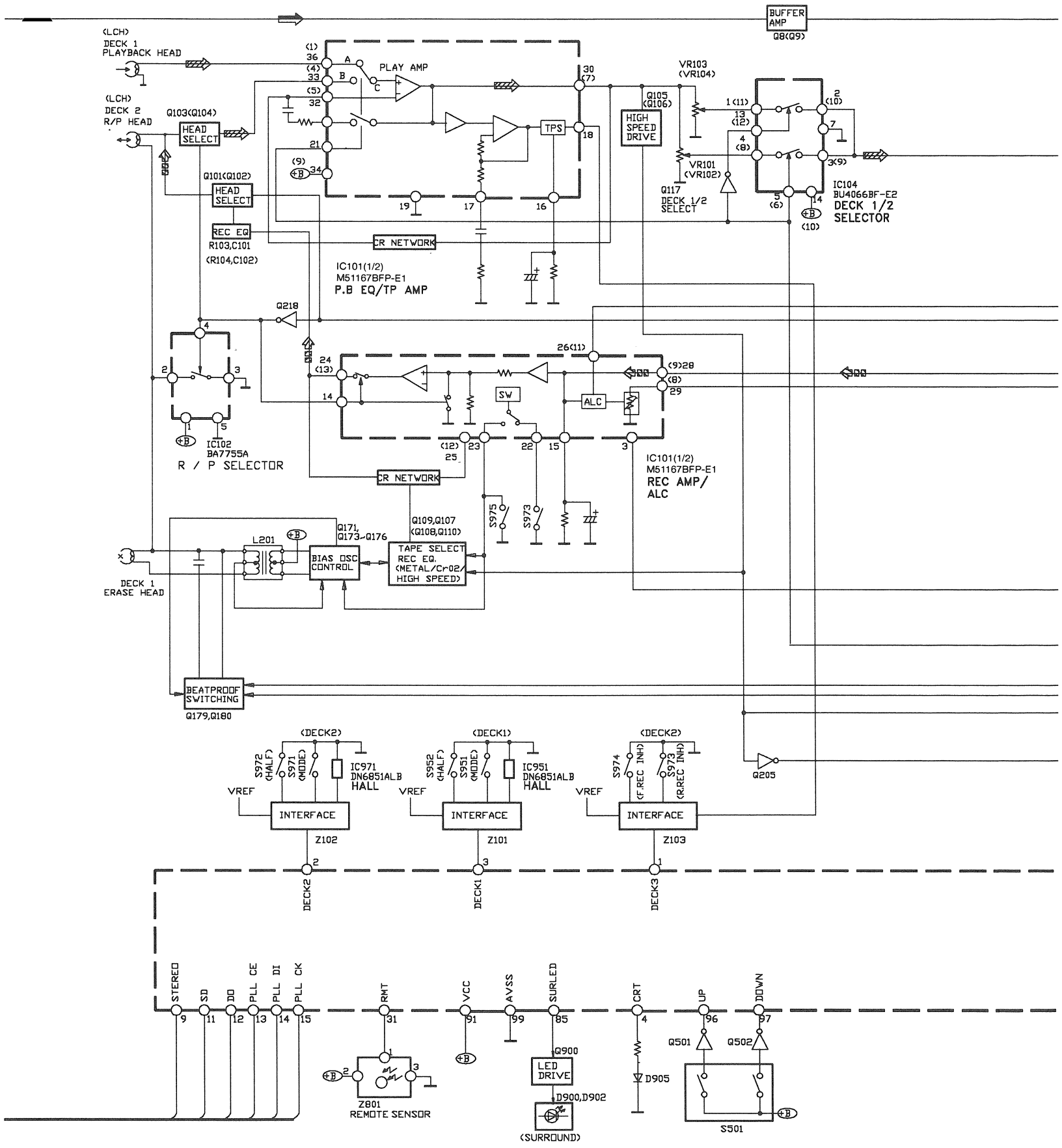
BUFFER AMP
Q8(Q9)
(LCH)
DECK 1
PLAYBACK HEAD
(LCH)
DECK 2
R/P HEAD
Q103(Q104)
HEAD SELECT
Q101(Q102)
HEAD SELECT
REC EQ
R103,C101
(R104,C102)
PLAY AMP
TPS
HIGH SPEED DRIVE
VR103
(VR104)
Q105
(Q106)
VR101
(VR102)
Q117
DECK 1/2 SELECT
IC104
BU4066BF-E2
DECK 1/2 SELECTOR
CR NETWORK
IC101(1/2)
M51167BFP-E1
P.B EQ/TP AMP
Q218
IC102
BA7755A
R / P SELECTOR
SW
ALC
IC101(1/2)
M51167BFP-E1
REC AMP/ ALC
CR NETWORK
S975
S973
Q171,
Q173~Q176
Q109,Q107
(Q108,Q110)
L201
BIAS OSC CONTROL
TAPE SELECT
REC EQ.
(METAL/CrO2/
HIGH SPEED)
DECK 1
ERASE HEAD
BEATPROOF SWITCHING
Q179,Q180
(DECK2)
S972
(HALF)
S971
(MODE)
IC971
DN6851ALB
HALL
VREF
INTERFACE
Z102
(DECK1)
S952
(HALF)
S951
(MODE)
IC951
DN6851ALB
HALL
INTERFACE
Z101
(DECK2)
S974
(F.REC INH)
S973
(R.REC INH)
INTERFACE
Z103
Q205
DECK2
DECK1
DECK3
STEREO
SD
DO
PLL CE
PLL DI
PLL CK
RMT
VCC
AVSS
SURLED
CRT
UP
DOWN
Q501
Q502
Z801
REMOTE SENSOR
Q900
LED DRIVE
D900,D902
(SURROUND)
D905
S501

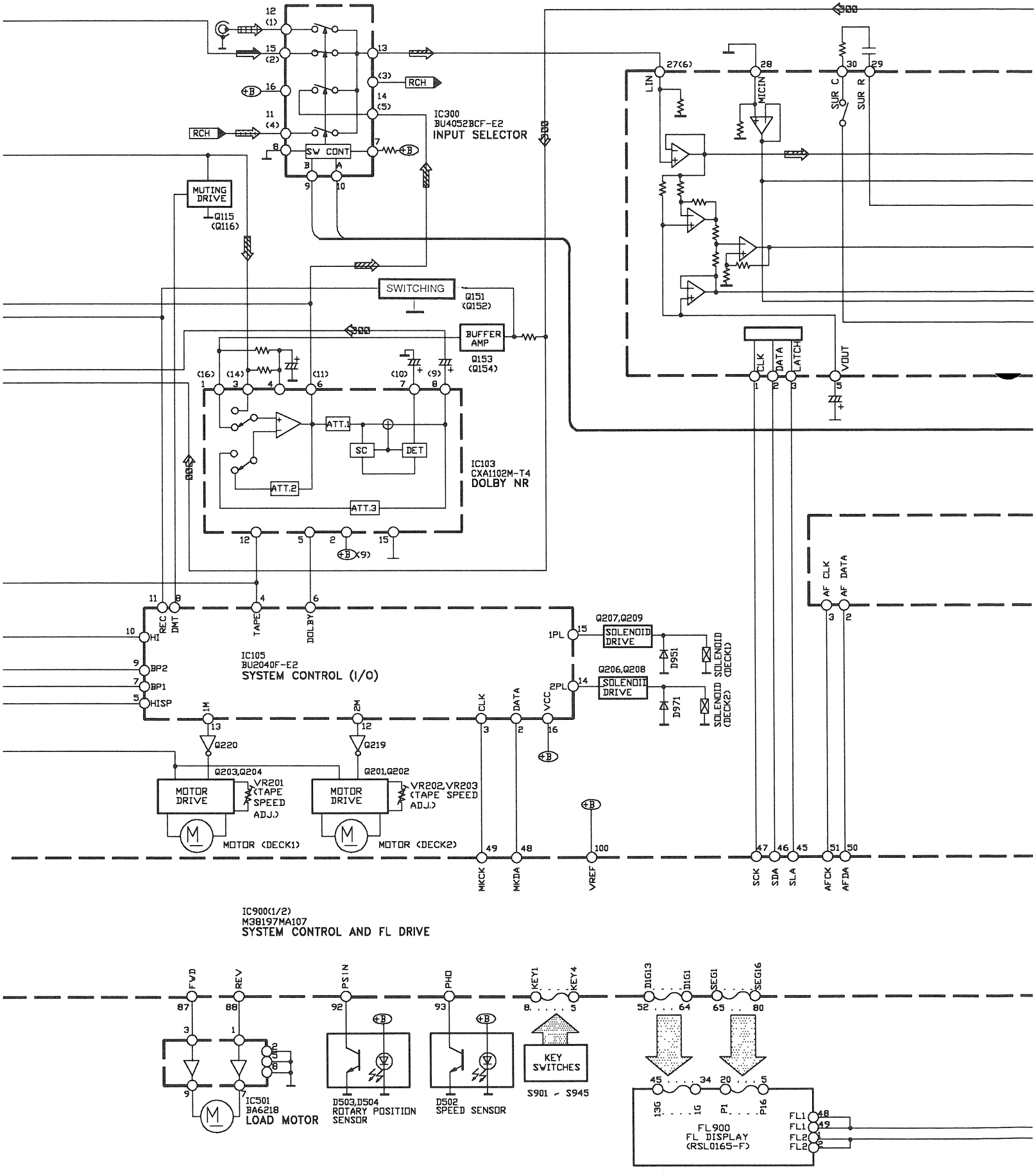
IC300
BU4052BCF-E2
INPUT SELECTOR
SW CONT
RCH
MUTING DRIVE
Q115
(Q116)
SWITCHING
Q151
(Q152)
BUFFER AMP
Q153
(Q154)
ATT.1
ATT.2
ATT.3
SC
DET
IC103
CXA1102M-T4
DOLBY NR
LIN
MICIN
SUR C
SUR R
CLK
DATA
LATCH
VOUT
AF CLK
AF DATA
REC
DMT
TAPE
DOLBY
HI
BP2
BP1
HISP
IC105
BU2040F-E2
SYSTEM CONTROL (I/O)
Q207,Q209
SOLENOID DRIVE
Q206,Q208
SOLENOID DRIVE
D951
D971
SOLENOID (DECK1)
SOLENOID (DECK2)
1PL
2PL
VCC
1M
2M
Q220
Q219
Q203,Q204
Q201,Q202
MOTOR DRIVE
VR201 (TAPE SPEED ADJ.)
VR202,VR203 (TAPE SPEED ADJ.)
MOTOR (DECK1)
MOTOR (DECK2)
MKCK
MKDA
VREF
SCK
SDA
SLA
AFCK
AFDA
IC900(1/2)
M38197MA107
SYSTEM CONTROL AND FL DRIVE
FWD
REV
PSIN
PHD
KEY1
KEY4
DIG13
DIG1
SEG1
SEG16
IC501
BA6218
LOAD MOTOR
D503,D504
ROTARY POSITION SENSOR
D502
SPEED SENSOR
KEY SWITCHES
S901 ~ S945
FL900
FL DISPLAY
(RSL0165-F)
FL1
FL2

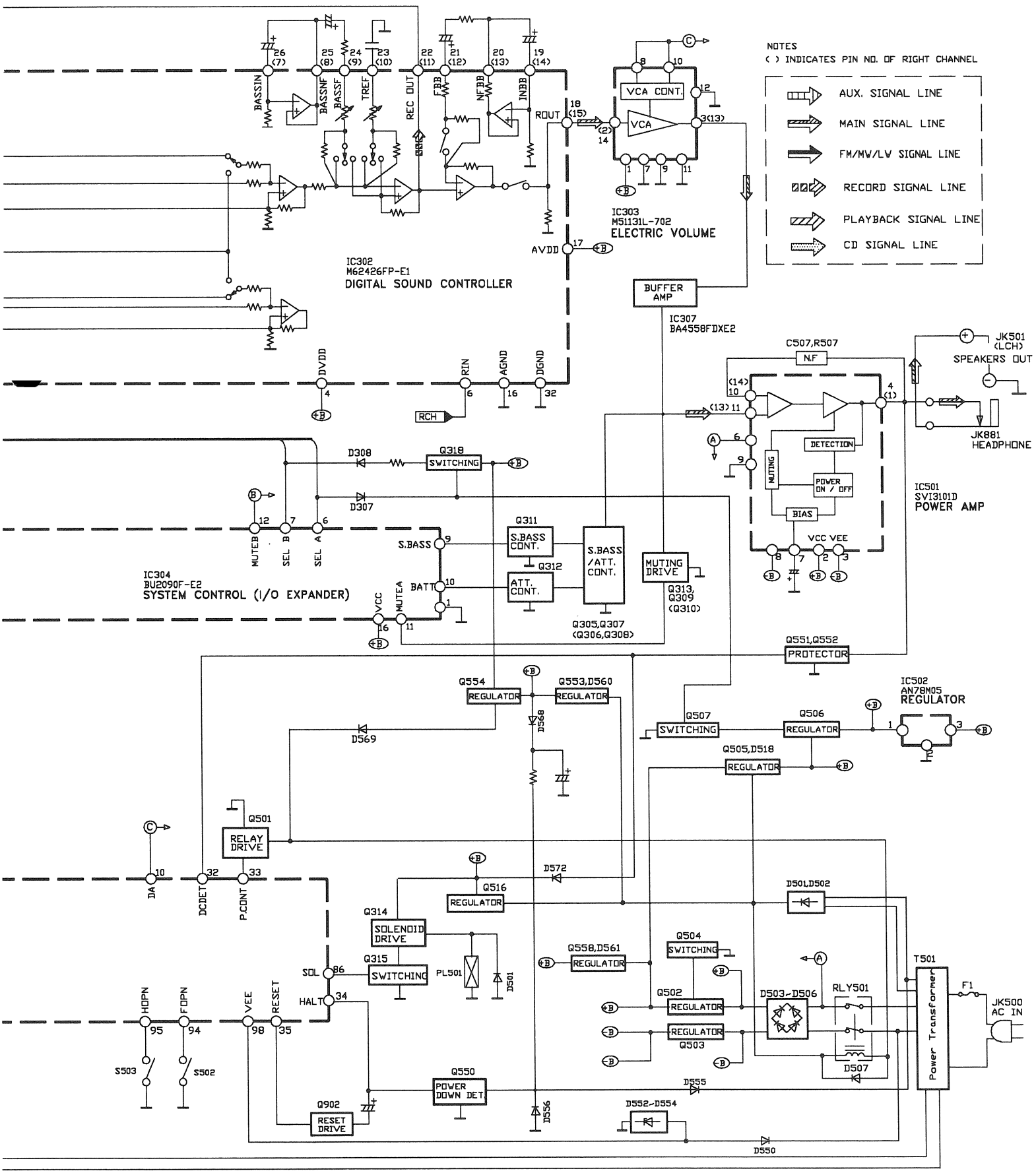
NOTES
( ) INDICATES PIN NO. OF RIGHT CHANNEL
AUX. SIGNAL LINE
MAIN SIGNAL LINE
FM/MW/LW SIGNAL LINE
RECORD SIGNAL LINE
PLAYBACK SIGNAL LINE
CD SIGNAL LINE
IC302
M62426FP-E1
DIGITAL SOUND CONTROLLER
IC303
M51131L-702
ELECTRIC VOLUME
VCA CONT.
VCA
BUFFER AMP
IC307
BA4558FDXE2
C507,R507
N.F
JK501
(LCH)
SPEAKERS OUT
JK881
HEADPHONE
IC501
SVI3101D
POWER AMP
DETECTION
MUTING
POWER ON / OFF
BIAS
VCC VEE
IC304
BU2090F-E2
SYSTEM CONTROL (I/O EXPANDER)
S.BASS CONT.
ATT. CONT.
S.BASS /ATT. CONT.
MUTING DRIVE
Q313, Q309 (Q310)
Q305,Q307 (Q306,Q308)
Q318
SWITCHING
Q551,Q552
PROTECTOR
Q554
REGULATOR
Q553,D560
IC502
AN78M05
REGULATOR
Q507
SWITCHING
Q506
Q505,D518
Q501
RELAY DRIVE
Q516
D501,D502
Q314
SOLENOID DRIVE
Q315
SWITCHING
PL501
Q558,D561
Q504
SWITCHING
Q502
Q503
D503-D506
RLY501
T501
Power Transformer
F1
JK500
AC IN
D507
Q550
POWER DOWN DET
Q902
RESET DRIVE
D552-D554
D555
D550
S503
S502

Printed Circuit Board

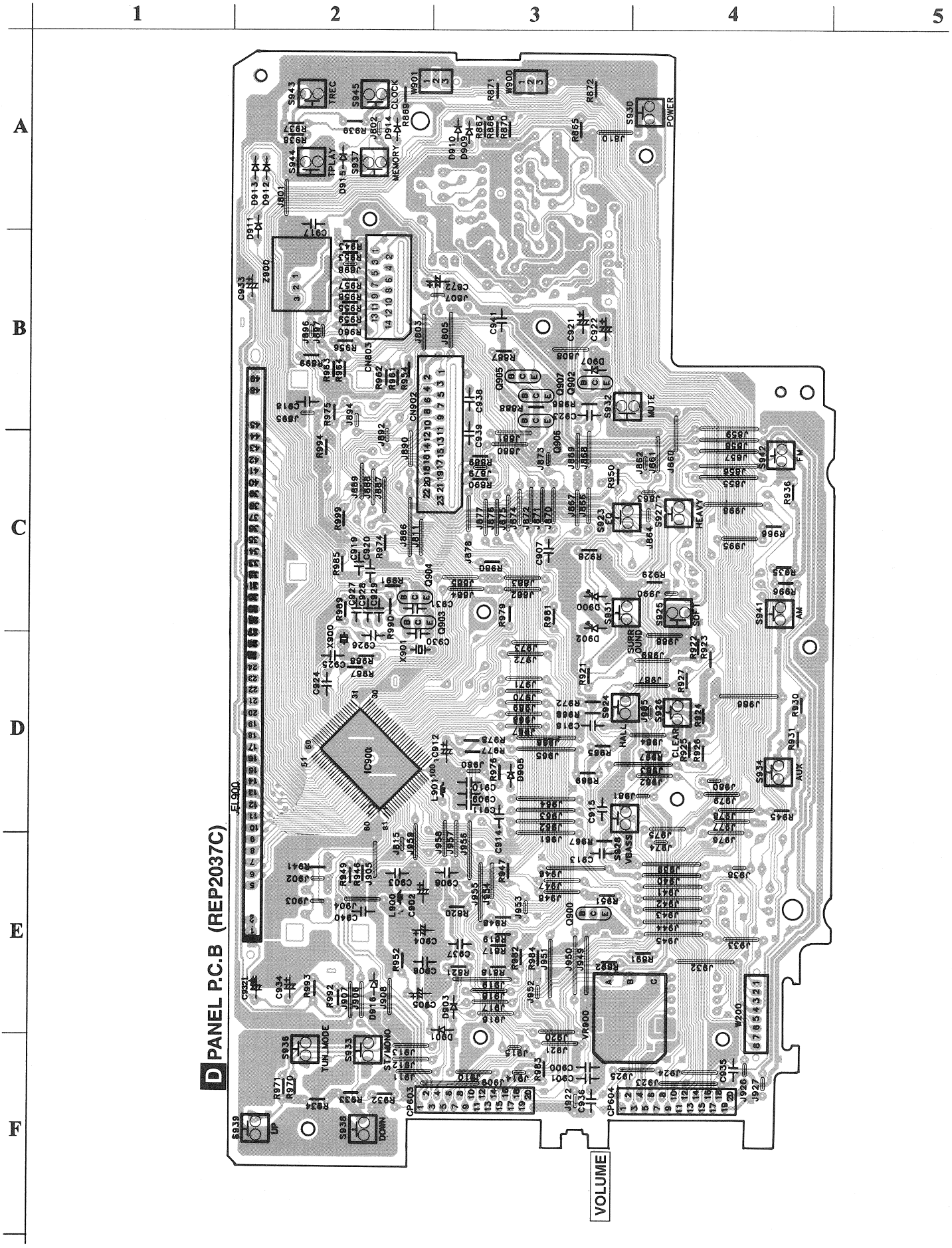

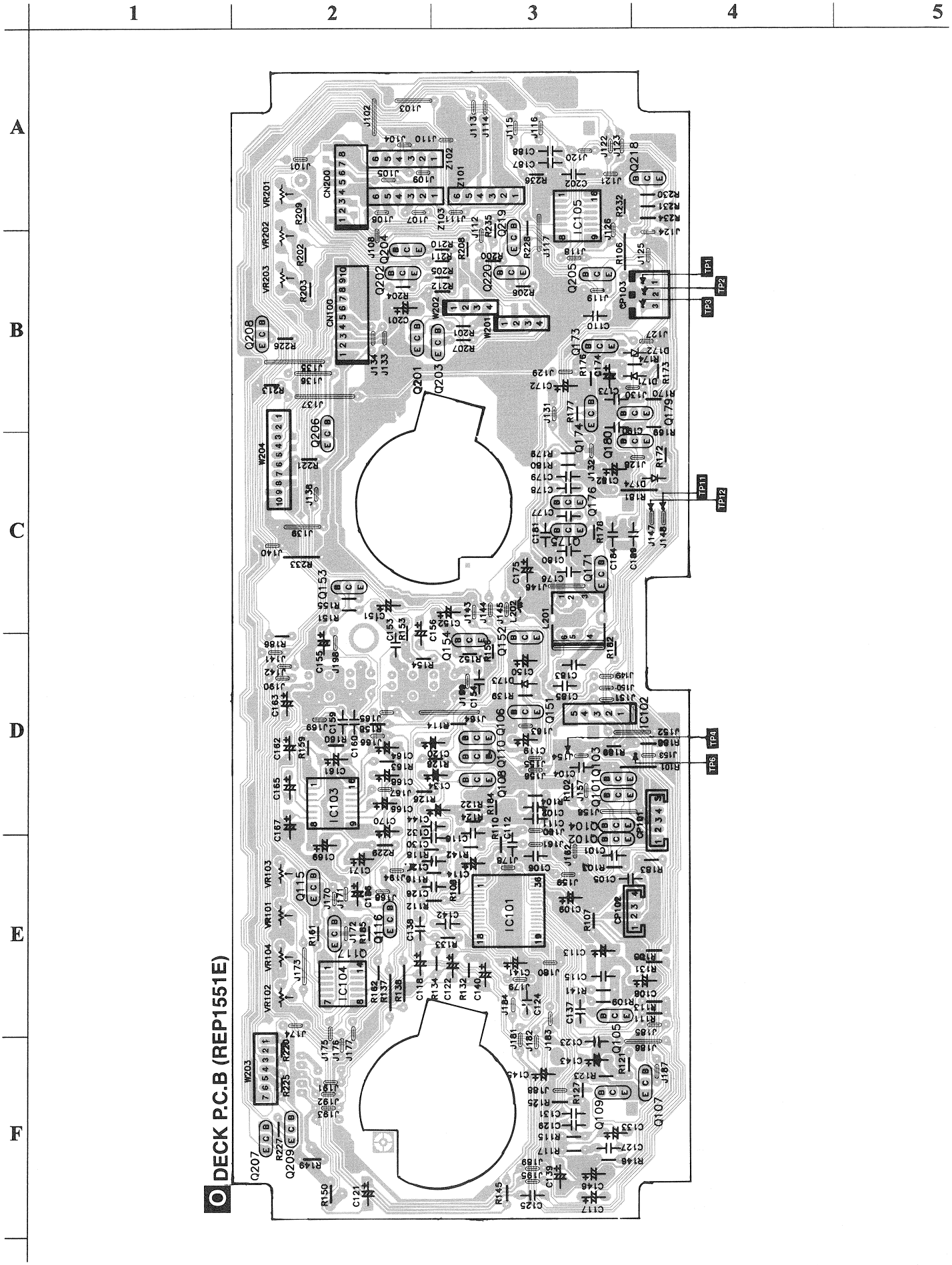
1
2
3
4
5
A
B
C
D
E
F
DECK P.C.B (REP1551E)
TP1
TP2
TP3
TP4
TP5
TP11
TP12

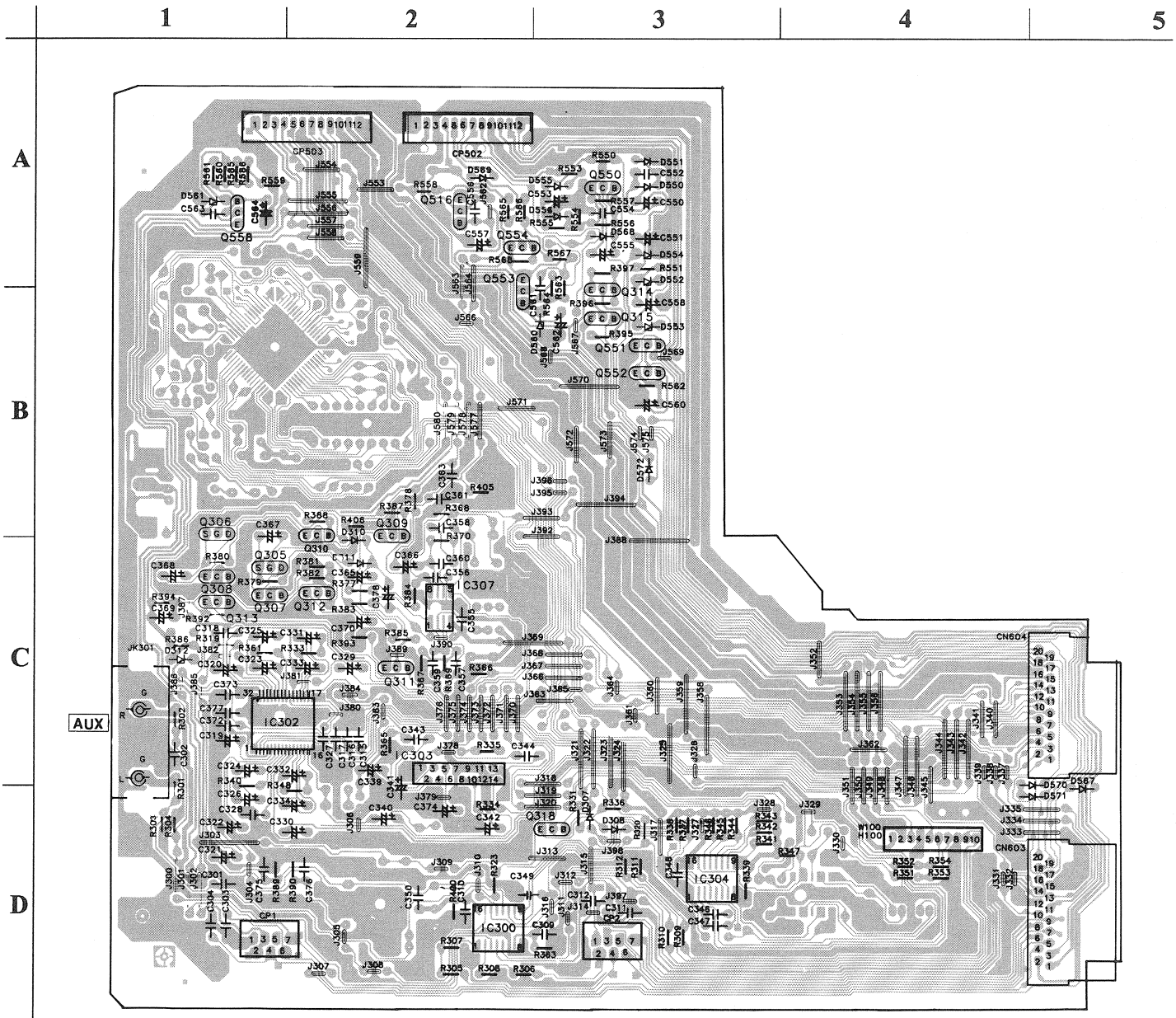

C MAIN P.C.B. (REP2036C) ...E
(REP2036D) ...EB
(REP2036E) ...EG

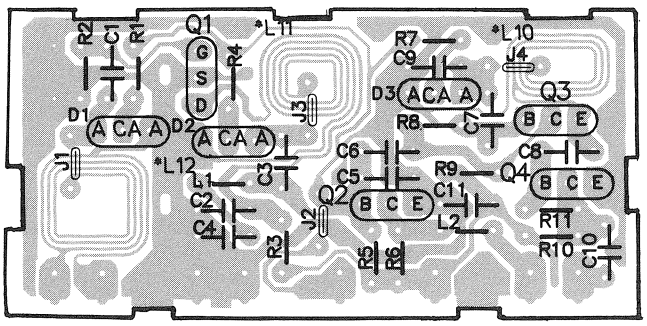

P TUNER PACK P.C.B.
(REP1999B) ... E,EB

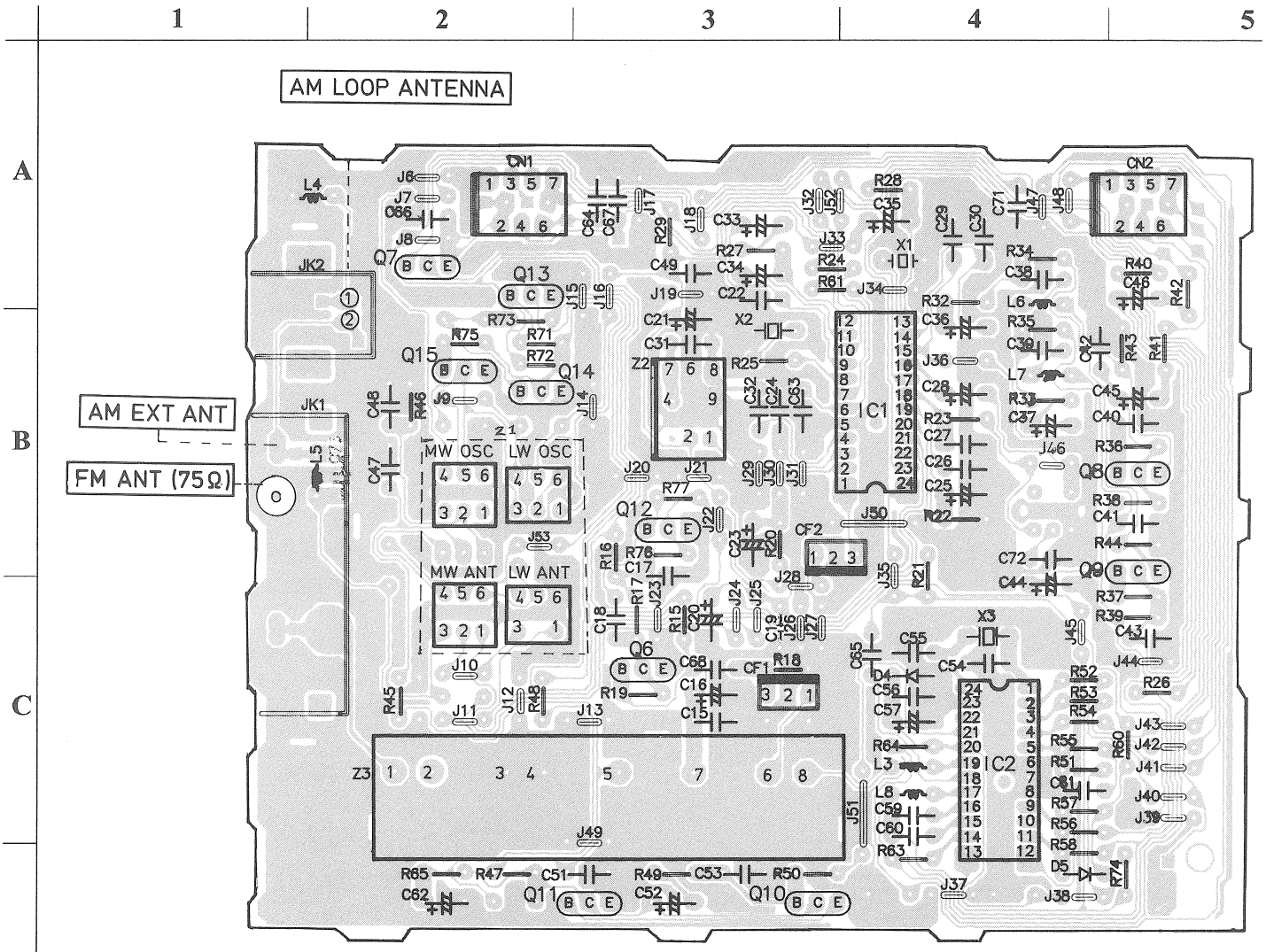

B TUNER P.C.B. (REP2000B) ...E/EB

F OPERATION (1) P.C.B. (REP2037C)

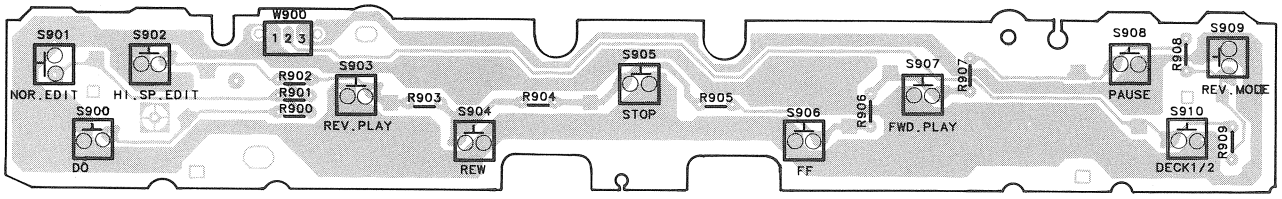

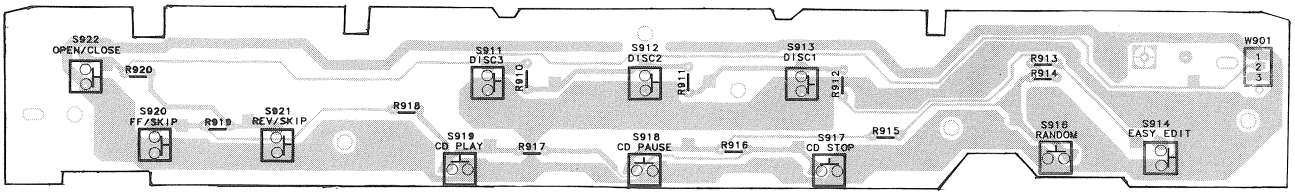

B OPERATION (2) P.C.B. (REP2037C)

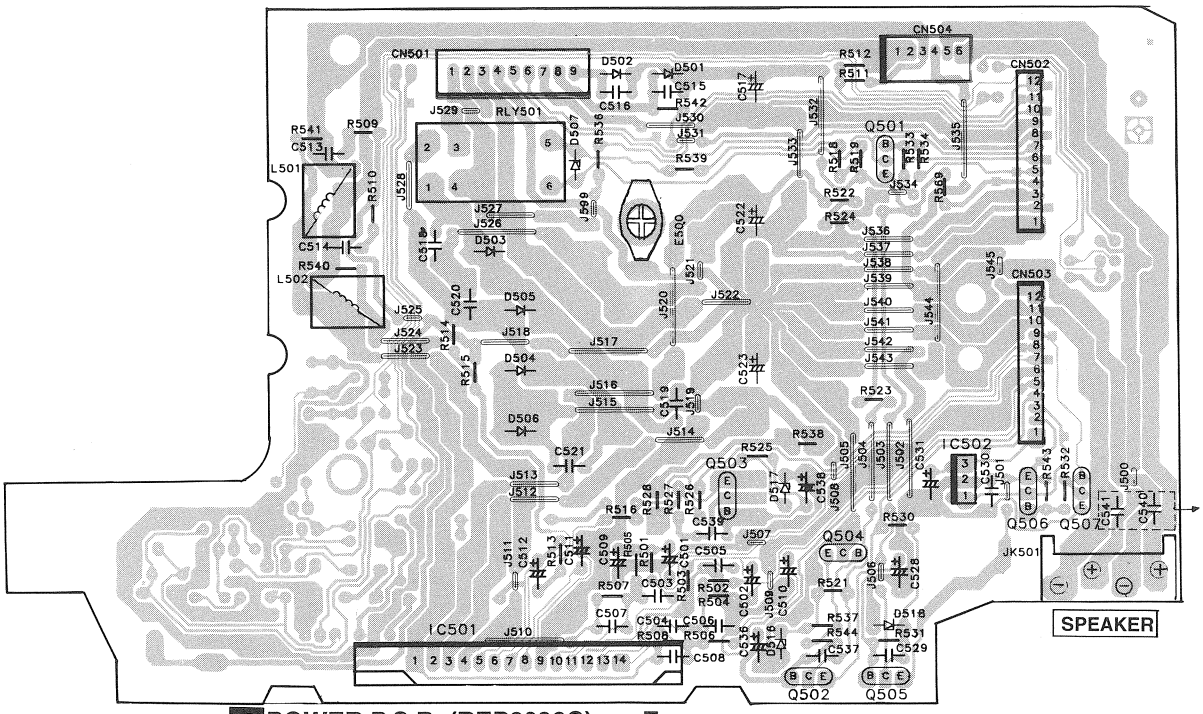

J POWER P.C.B (REP2036C) . . . E
(REP2036D) . . . EB
(REP2036E) . . . EG

G LOADING MOTOR P.C.B.

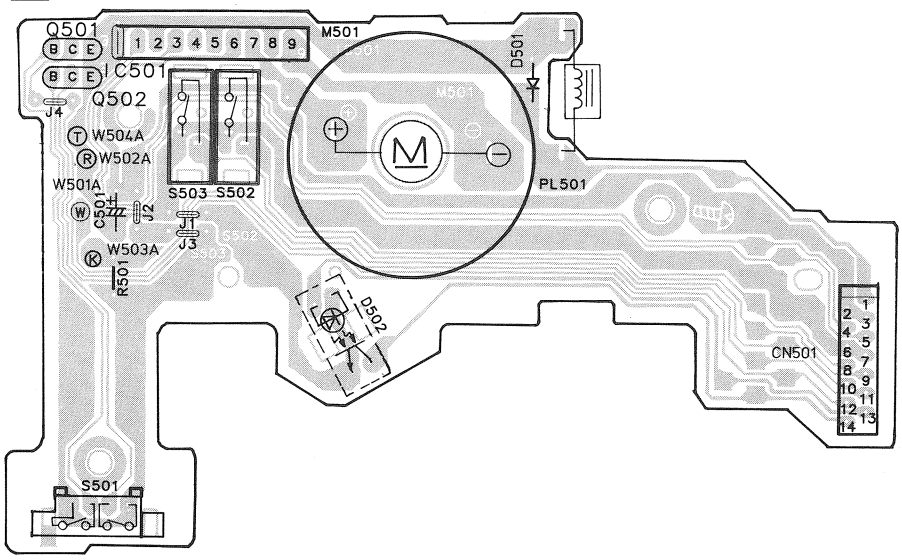

N MECHANISM (DECK 1) P.C.B. (REP1401A)

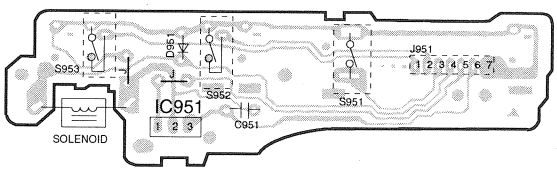

M MECHANISM (DECK 2) P.C.B. (REP1591A)

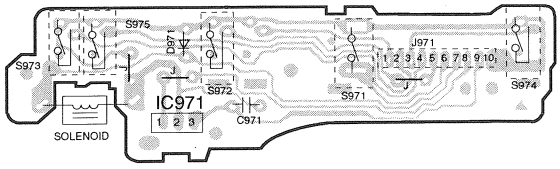

1 2 3 4 5

A B C D E F

A SERVO P.C.B. (REP1650A-N)

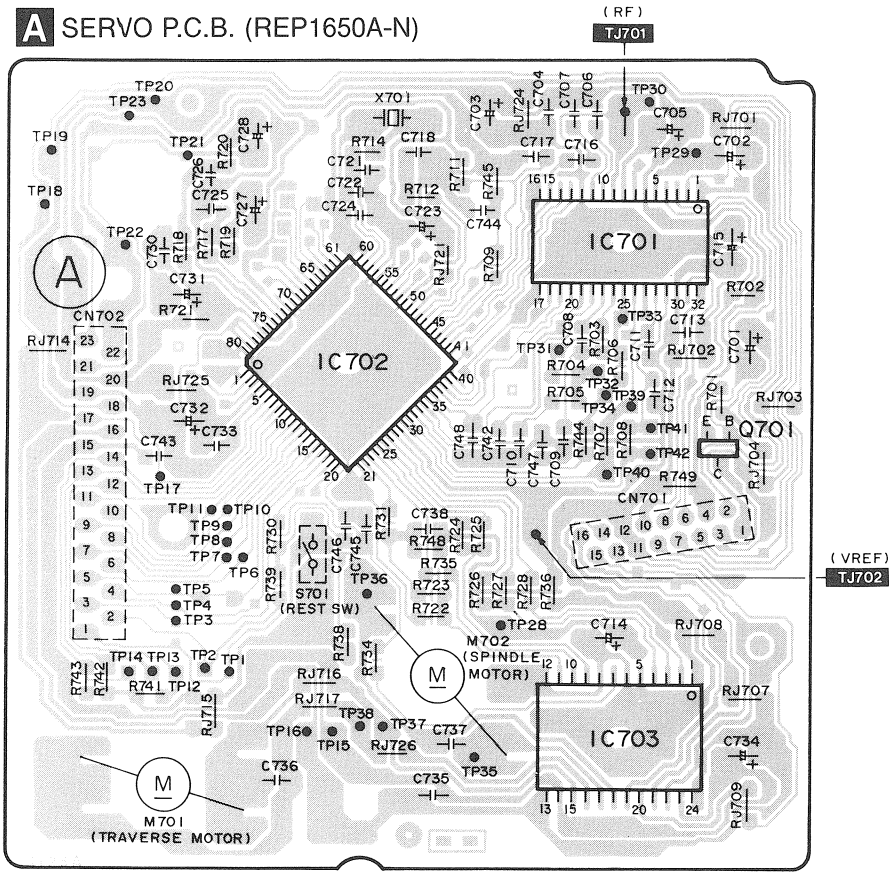

PHONES

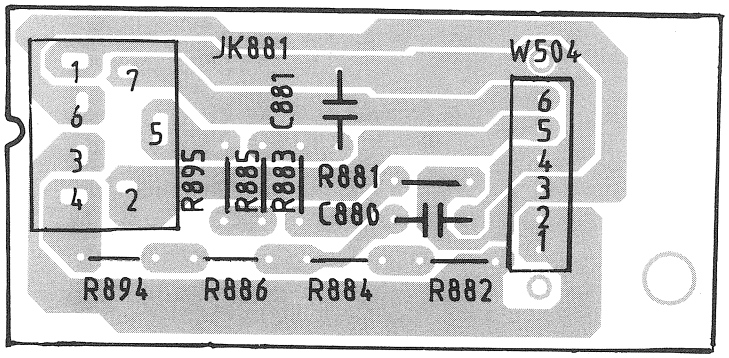

K HEADPHONE P.C.B. (REP2037C)

H PHOTO TR. P.C.B.

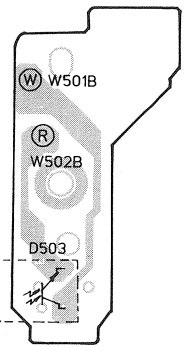

I LED P.C.B.

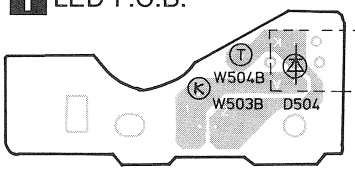

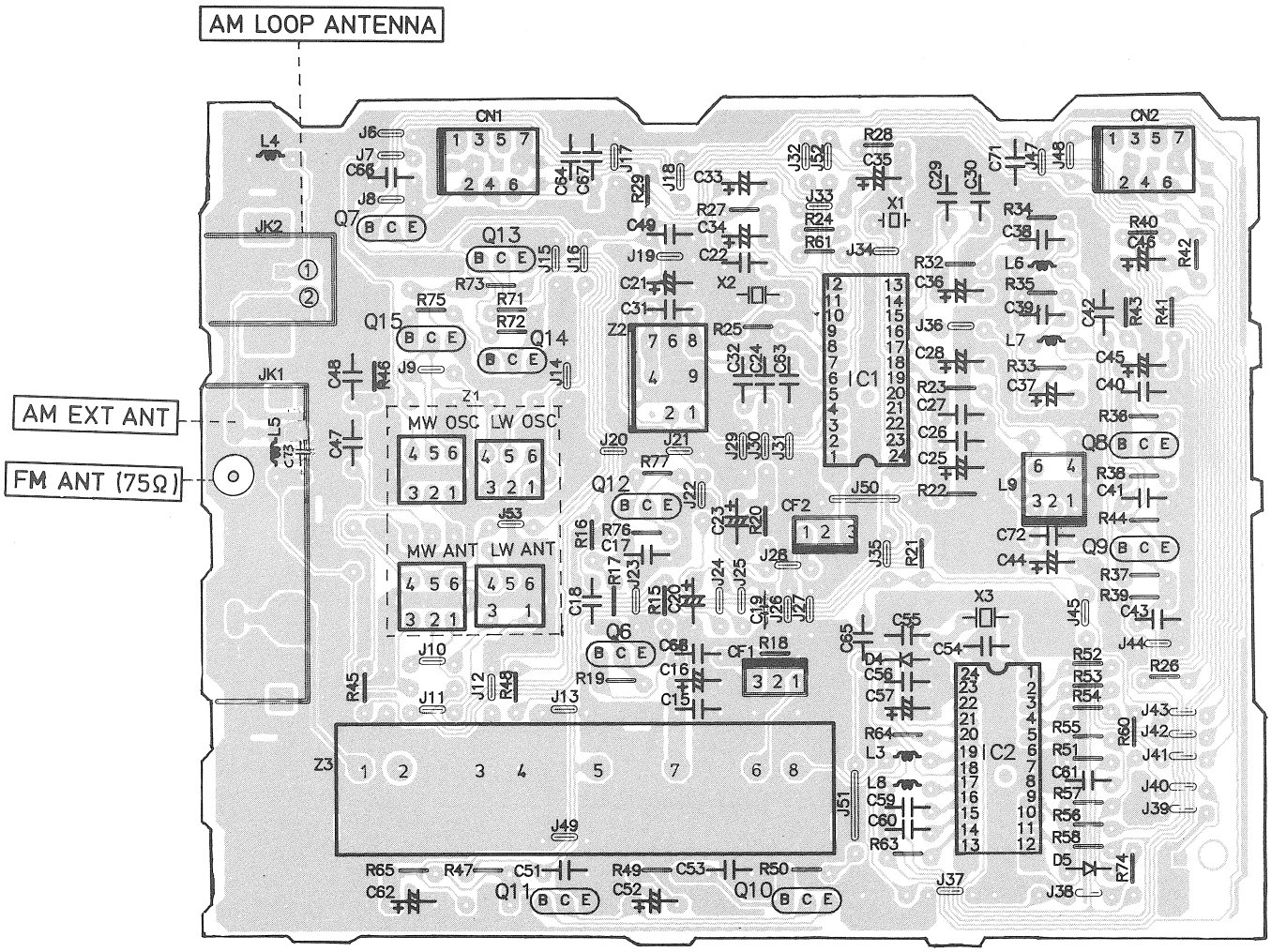

B TUNER P.C.B. (REP2000G) ...EG

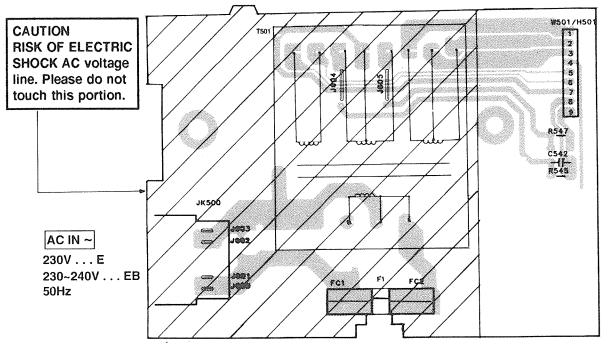

L TRANSFORMER P.C.B
(REP2036C) ...E
(REP2036D) ...EB

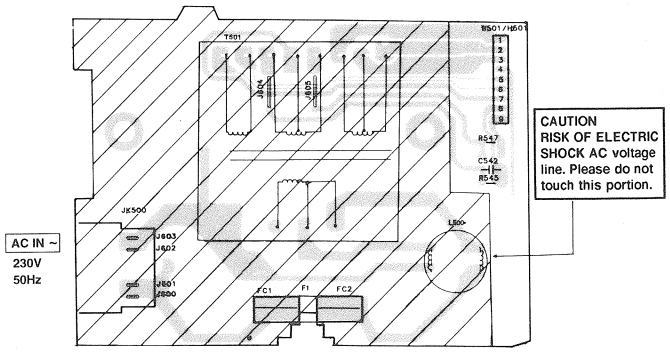

L TRANSFORMER P.C.B
(REP2036E) ...EG

Schematic Diagram

(All schematic diagrams may be modified at any time with the development of new technology)

Note :

< for Operation (1) circuit , Operation (2) circuit and Panel circuit > (Page 42 ~ 43)

- **S900** : DOLBY switch
- **S901** : Normal speed edit switch
- **S902** : High speed edit switch
- **S903** : Reverse play switch
- **S904** : REW switch
- **S905** : Stop switch
- **S906** : FF switch
- **S907** : FWD. play switch
- **S908** : Pause switch
- **S909** : Reverse mode switch
- **S910** : Deck 1/2 switch
- **S911** : Disc 3 switch
- **S912** : Disc 2 switch
- **S913** : Disc 1 switch
- **S914** : Easy record edit switch
- **S916** : Random switch
- **S917** : CD stop switch
- **S918** : CD pause switch
- **S919** : CD play switch
- **S920** : FF/Skip switch
- **S921** : REV/Skip switch
- **S922** : Open/close switch
- **S923** : On/flat switch
- **S924** : Hall switch
- **S925** : Soft switch
- **S926** : Clear switch
- **S927** : Heavy switch
- **S928** : V. Bass switch
- **S930** : Power switch
- **S931** : Surround switch
- **S932** : Mute switch
- **S933** : FM mode/BP switch
- **S934** : AUX switch
- **S936** : Tuning mode switch
- **S937** : Memory/set switch
- **S938** : Tuning Down switch
- **S939** : Tuning Up switch
- **S941** : AM switch
- **S942** : FM switch
- **S943** : Timer record switch
- **S944** : Timer play switch
- **S945** : Clock/timer switch
- **VR900** : Volume control

< for Servo circuit > (Page 44 - 45)

- **S701** : Reset switch

< for Deck circuit, Mechanism (Deck 1) circuit and Mechanism (Deck 2) circuit > (Page 52 - 54)

- **S951** : Deck 1 mode detect switch.
- **S952** : Deck 1 tape detect switch.
- **S953** : Deck 1 CrO_2 detect switch.
- **S971** : Deck 2 mode detect switch.
- **S972** : Deck 2 tape detect switch.
- **S973** : Deck 2 tab detect switch.
- **S974** : Deck 2 tab detect switch.
- **S975** : Deck 2 CrO_2 detect switch.
- **VR101** : Deck 1 Lch playback gain adjustment VR (Dolby).
- **VR102** : Deck 1 Rch playback gain adjustment VR (Dolby).
- **VR103** : Deck 2 Lch playback gain adjustment VR (Dolby).
- **VR104** : Deck 2 Rch playback gain adjustment VR (Dolby).
- **VR201** : Deck 1 tape speed adjustment VR (Normal).
- **VR202** : Deck 2 tape speed adjustment VR (Normal).
- **VR203** : Deck 2 tape speed adjustment VR (High).

< for Loading Motor circuit, Photo Tr. circuit and Led circuit > (Page 56)

- **S501** : Up/down switch.
- **S502** : Full open switch.
- **S503** : Half open switch.

- **Signal line**

: +B line
: –B line
: FM/AM signal line
: Main signal line
: Playback signal line
: Record signal line
: CD signal line
: FM signal line
: AM(MW/LW) signal line
: AM(MW/LW) OSC signal line
: FM OSC signal line
: Aux signal line

- The voltage value and waveforms are the reference voltage of this unit measured by DC electronic voltmeter (high impedance) and oscilloscope on the basis of chassis.
  Accordingly, there may arise some error in voltage values and waveforms depending upon the internal impedance of the tester or the measuring unit.

No mark : Playback << >>..... Tape Recording (( )): CD ( )..... AM(MW/LW) < >..... FM

- **Importance safety notice:**
  Components identified by ⚠ mark have special characteristics important for safety. Furthermore, special parts which have purposes of fire-retardant (resistors), high-quality sound (capacitors), low-noise (resistors), etc. are used. When replacing any of components, be sure to use only manufacturer's specified parts shown in the parts list.

Caution !

IC, LSI and VLSI are sensitive to static electricity.
Secondary trouble can be prevented by taking care during repair.

- Cover the parts boxes made of plastics with aluminium foil.
- Ground the soldering iron.
- Do not touch the pins of IC, LSI or VLSI with fingers directly.
- Put a conductive mat on the work table.

F OPERATION (1) CIRCUIT

E OPERATION (2) CIRCUIT

D PANEL CIRCUIT

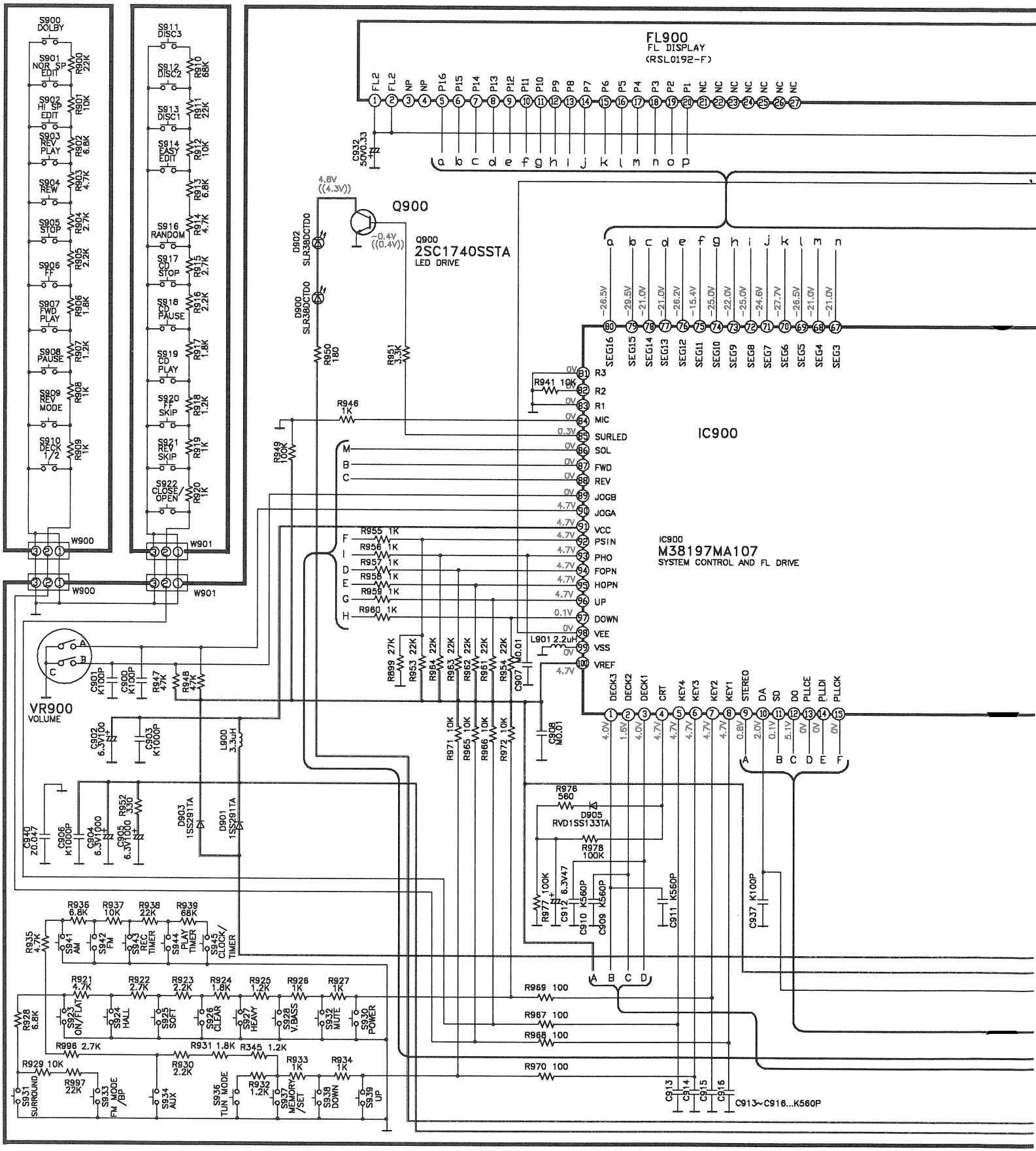

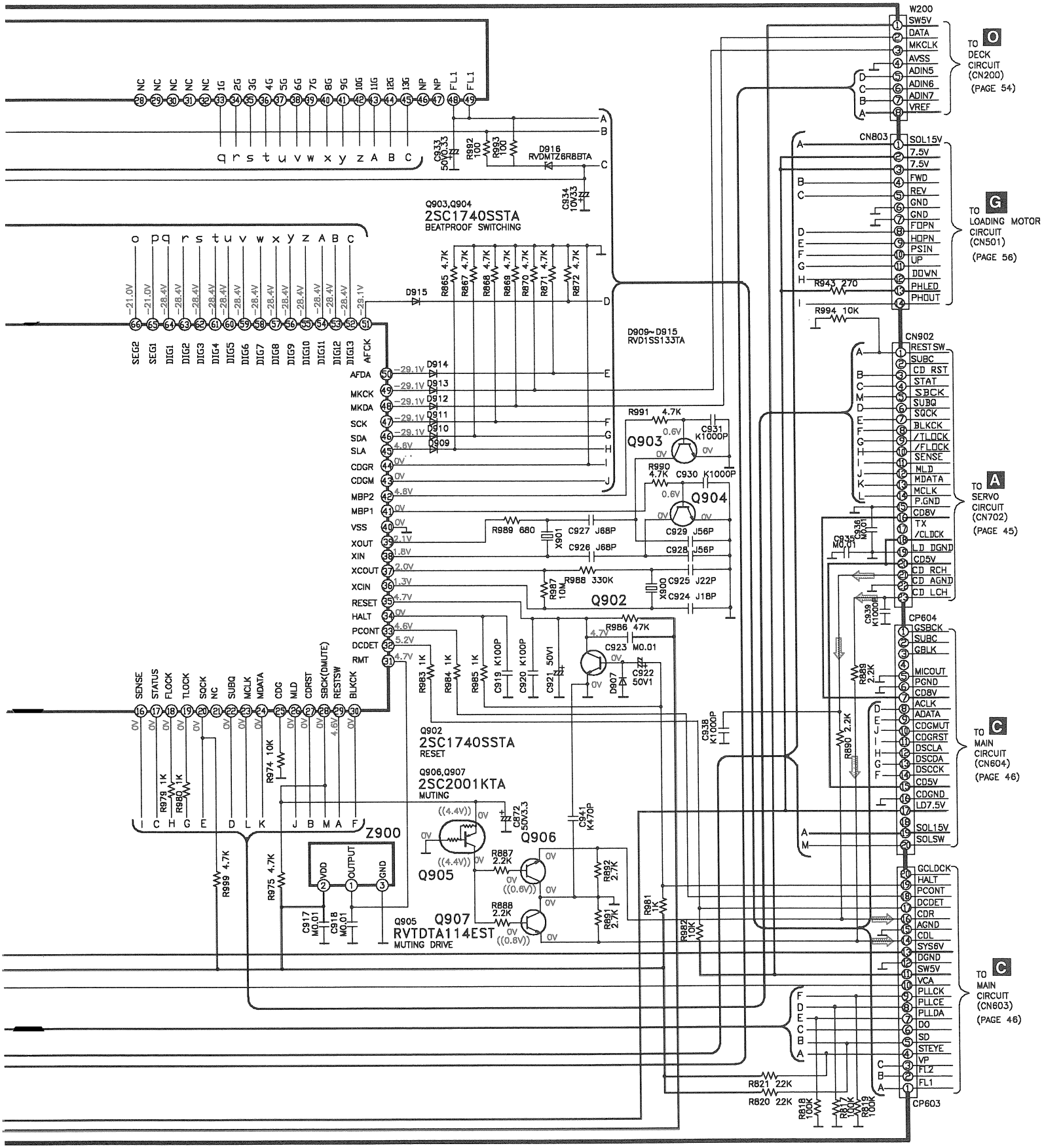
W200
SW5V
DATA
MKCLK
AVSS
ADIN5
ADIN6
ADIN7
VREF
TO O DECK CIRCUIT (CN200) (PAGE 54)
CN803
SOL15V
7.5V
7.5V
FWD
REV
GND
GND
FOPN
HOPN
PSIN
UP
DOWN
PHLED
PHOUT
TO G LOADING MOTOR CIRCUIT (CN501) (PAGE 56)
R943 270
R994 10K
CN902
RESTSW
SUBC
CD RST
STAT
SBCK
SUBQ
SQCK
BLKCK
/TLOCK
/FLOCK
SENSE
MLD
MDATA
MCLK
P.GND
CD8V
TX
/CLOCK
LD DGND
CD5V
CD RCH
CD AGND
CD LCH
TO A SERVO CIRCUIT (CN702) (PAGE 45)
CP604
GSBCK
SUBC
GBLK
MICOUT
PGND
CD8V
ACLK
ADATA
CDGMUT
CDGRST
DSCLA
DSCDA
DSCCK
CD5V
CDGND
LD7.5V
SOL15V
SOLSW
TO C MAIN CIRCUIT (CN604) (PAGE 46)
GCLDCK
HALT
PCONT
DCDET
CDR
AGND
CDL
SYS6V
DGND
SW5V
VCA
PLLCK
PLLCE
PLLDA
DO
SD
STEYE
VP
FL2
FL1
CP603
TO C MAIN CIRCUIT (CN603) (PAGE 46)
Q903,Q904
2SC1740SSTA
BEATPROOF SWITCHING
D915
D914
D913
D912
D911
D910
D909
D909~D915
RVD1SS133TA
Q903
Q904
Q902
2SC1740SSTA
RESET
Q906,Q907
2SC2001KTA
MUTING
Q905
Q906
Q907
RVTDTA114EST
MUTING DRIVE
Z900
VDD
OUTPUT
GND
D916
RVDMTZ6R8BTA
R991 4.7K
R990 4.7K
R989 680
R988 330K
R986 47K
R974 10K
R979 1K
R980 1K
R999 4.7K
R975 4.7K
R887 2.2K
R888 2.2K
R892 2.7K
R891 2.7K
R981 1K
R982 10K
R621 22K
R620 22K
R818 100K
R817 100K
R816 100K
R819 100K
R890 2.2K
R889 2.2K
C931 K1000P
C930 K1000P
C929 J56P
C928 J56P
C927 J68P
C926 J68P
C925 J22P
C924 J18P
C923 M0.01
C922 50V1
C921 50V1
C920 K100P
C919 K100P
C938 K1000P
C939 K1000P
C941 K470P
C872 50V3.3
C917 M0.01
C918 M0.01
C933 50V0.33
C934 10V33
X901
X900

A SERVO CIRCUIT

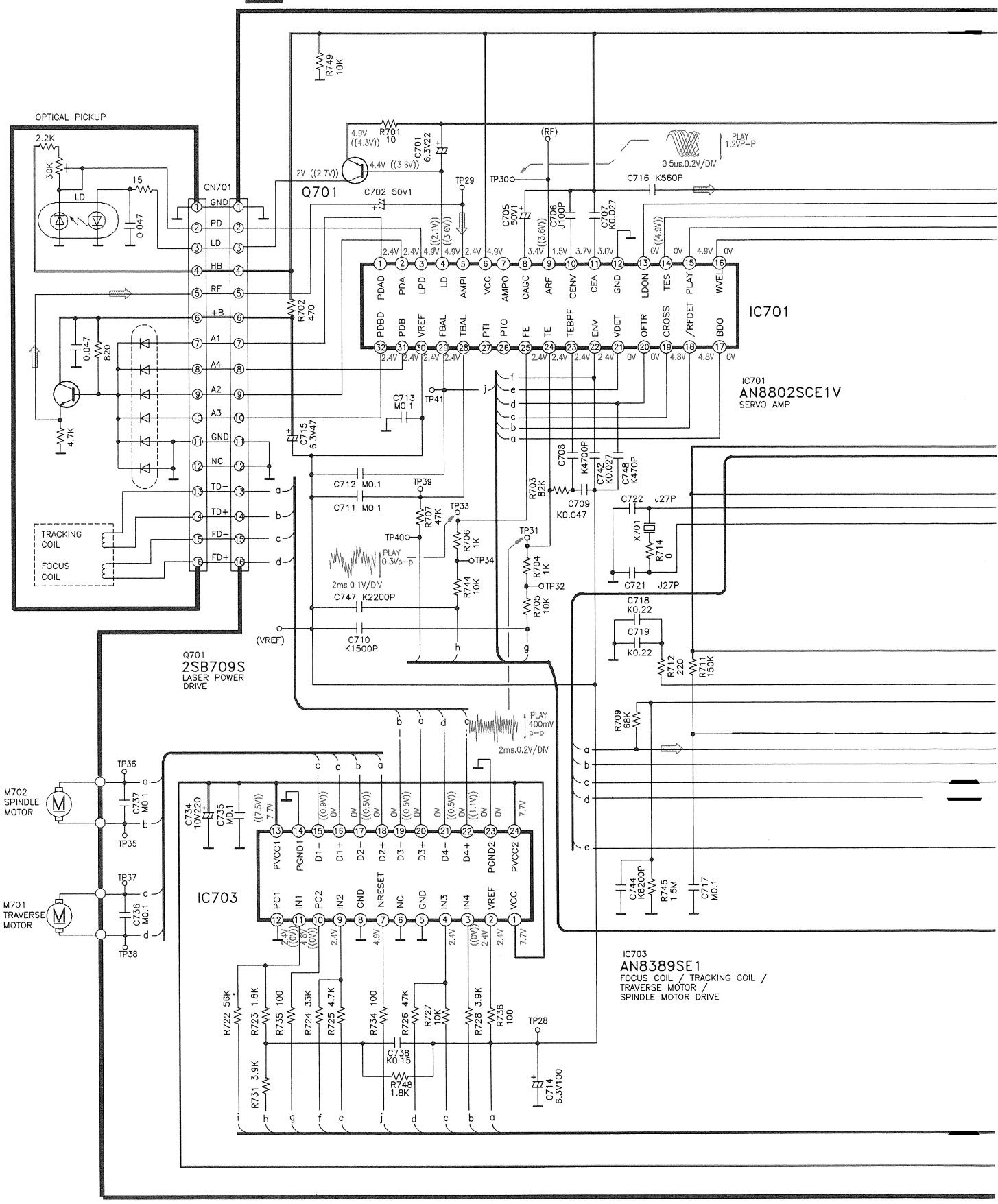

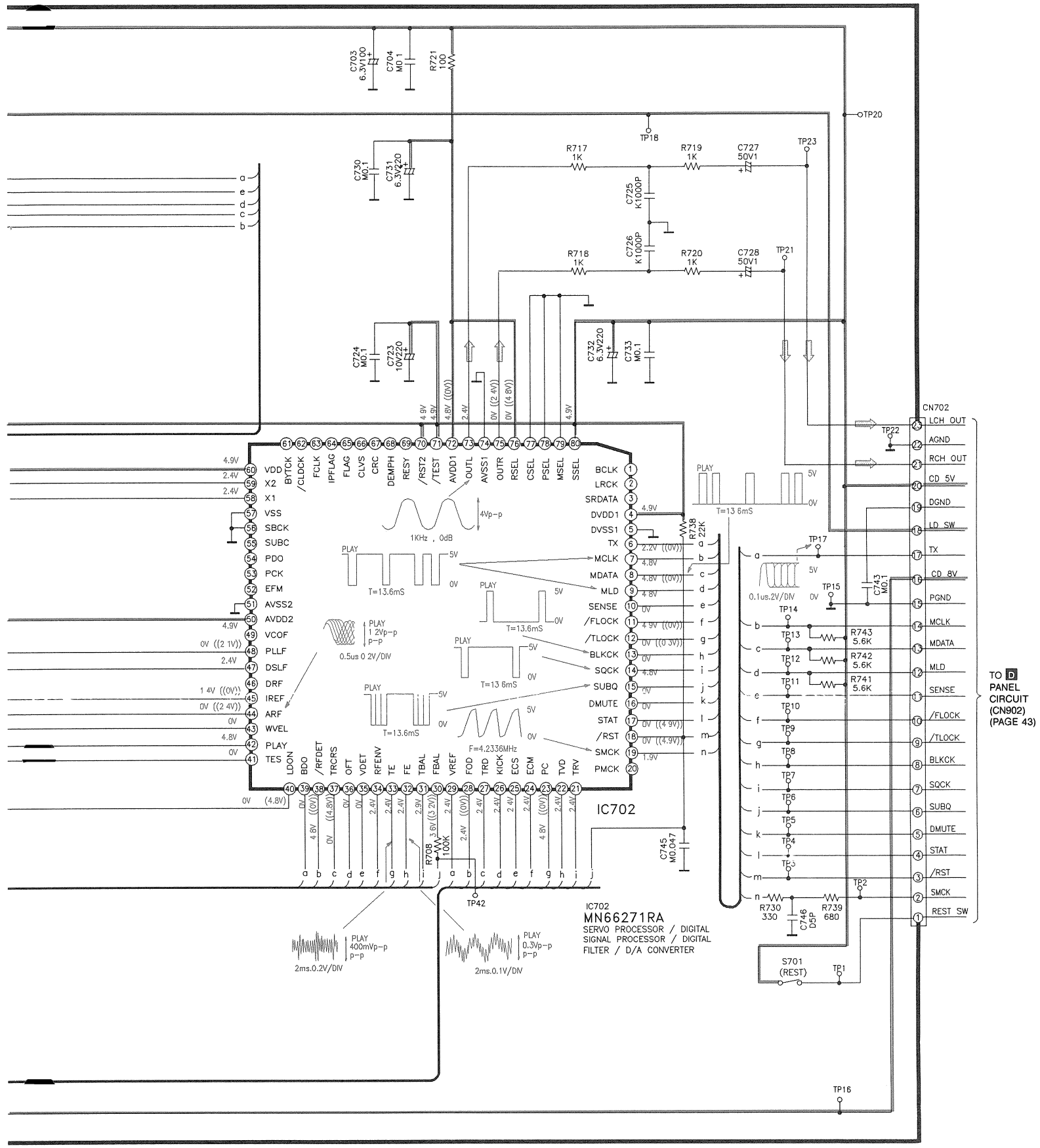
IC702
MN66271RA
SERVO PROCESSOR / DIGITAL
SIGNAL PROCESSOR / DIGITAL
FILTER / D/A CONVERTER
CN702
LCH OUT
AGND
RCH OUT
CD 5V
DGND
LD SW
TX
CD 8V
PGND
MCLK
MDATA
MLD
SENSE
/FLOCK
/TLOCK
BLKCK
SQCK
SUBQ
DMUTE
STAT
/RST
SMCK
REST SW
TO D PANEL CIRCUIT (CN902) (PAGE 43)
S701 (REST)
1KHz , 0dB
4Vp-p
T=13.6mS
T=13 6mS
F=4.2336MHz
0.5us 0 2V/DIV
0.1us.2V/DIV
2ms.0.2V/DIV
2ms.0.1V/DIV
PLAY 400mVp-p p-p
PLAY 0.3Vp-p p-p
PLAY 1 2Vp-p p-p

C MAIN CIRCUIT

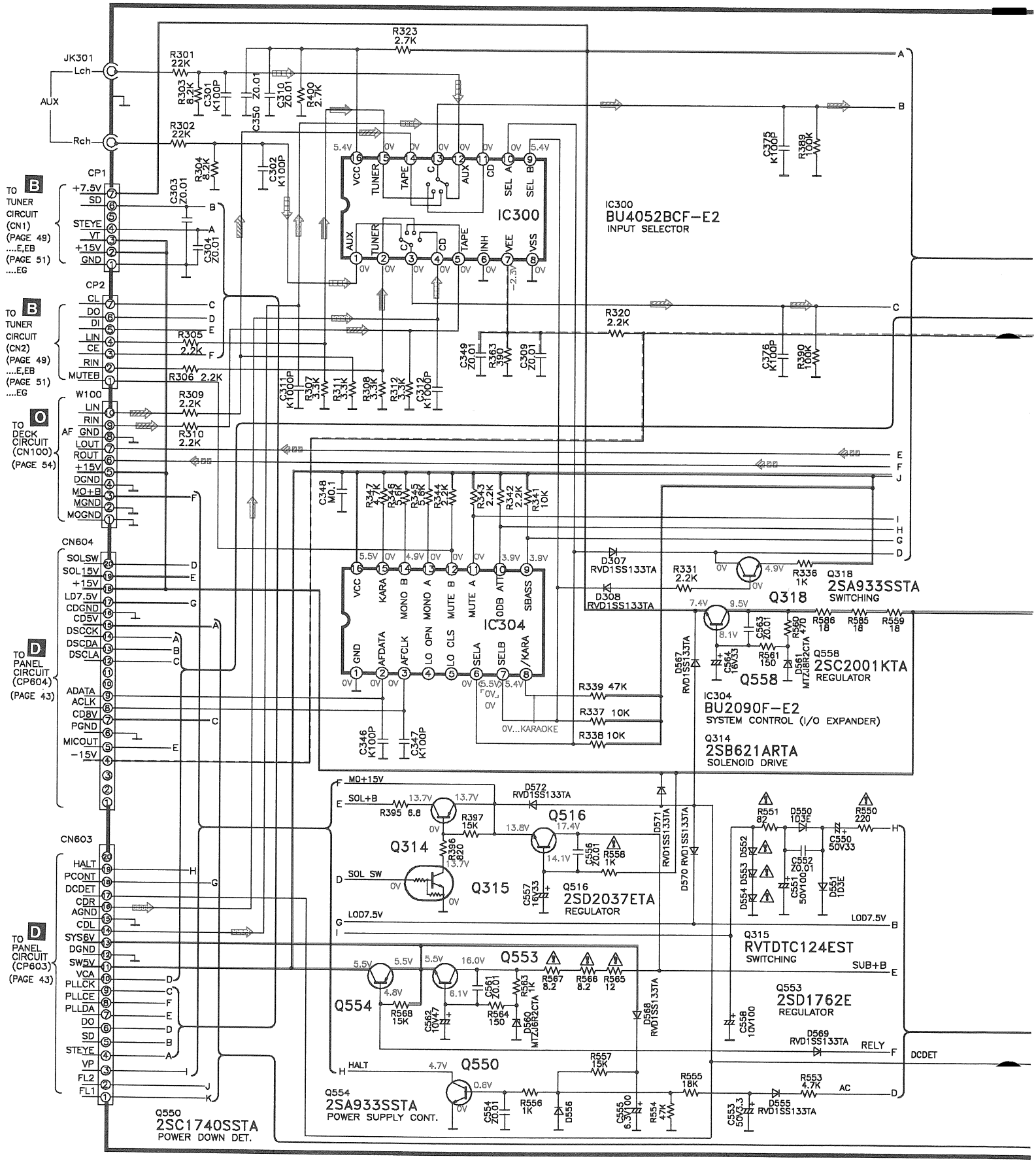

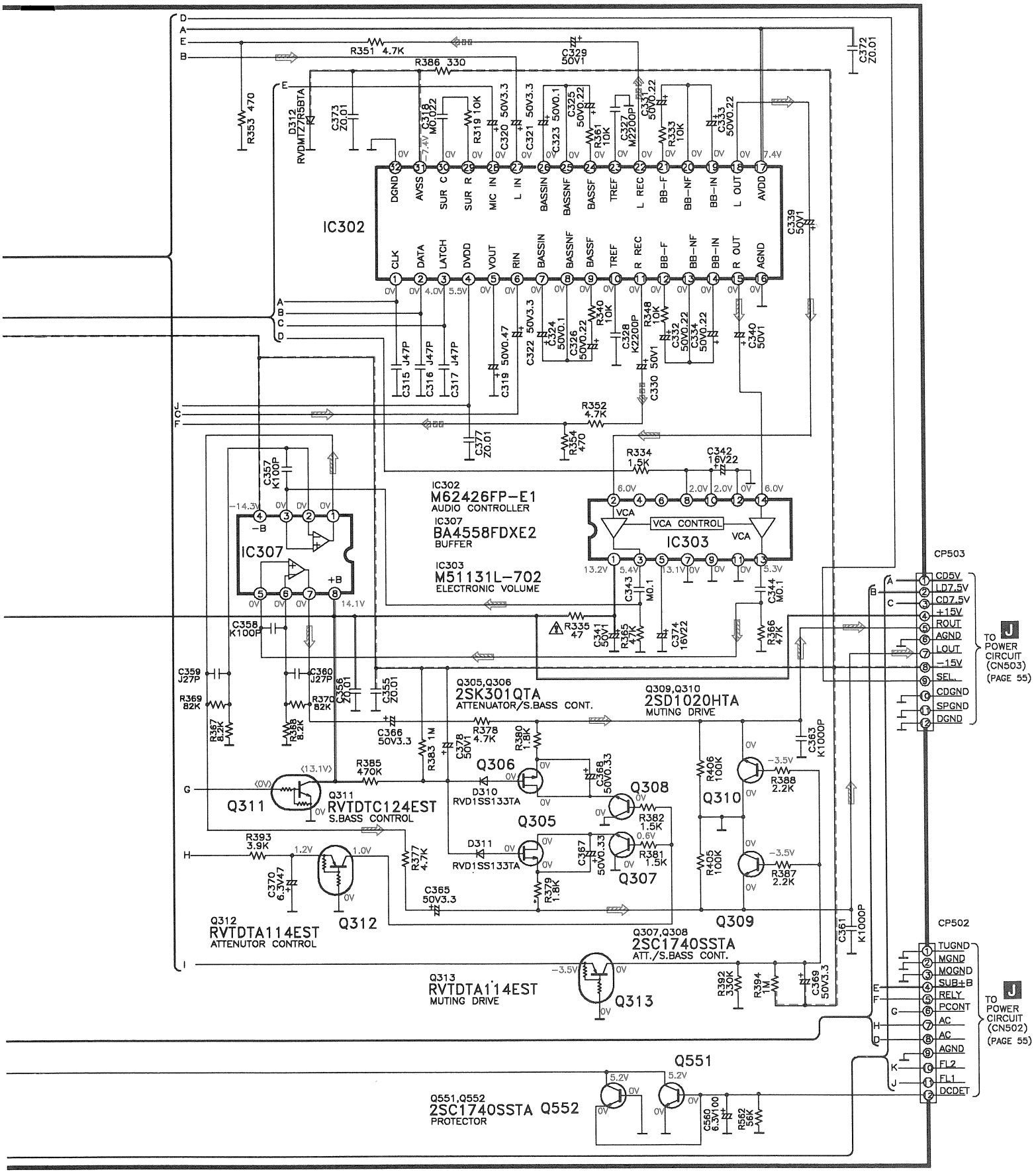
IC302
M62426FP-E1
AUDIO CONTROLLER
IC307
BA4558FDXE2
BUFFER
IC303
M51131L-702
ELECTRONIC VOLUME
VCA CONTROL
VCA
Q305,Q306
2SK301QTA
ATTENUATOR/S.BASS CONT.
Q309,Q310
2SD1020HTA
MUTING DRIVE
Q311
RVTDTC124EST
S.BASS CONTROL
Q312
RVTDTA114EST
ATTENUTOR CONTROL
Q307,Q308
2SC1740SSTA
ATT./S.BASS CONT.
Q313
RVTDTA114EST
MUTING DRIVE
Q551,Q552
2SC1740SSTA
PROTECTOR
CP503
CD5V
LD7.5V
CD7.5V
+15V
ROUT
AGND
LOUT
-15V
SEL.
CDGND
SPGND
DGND
TO POWER CIRCUIT (CN503) (PAGE 55)
CP502
TUGND
MGND
MOGND
SUB+B
RELY
PCONT
AC
AC
AGND
FL2
FL1
DCDET
TO POWER CIRCUIT (CN502) (PAGE 55)

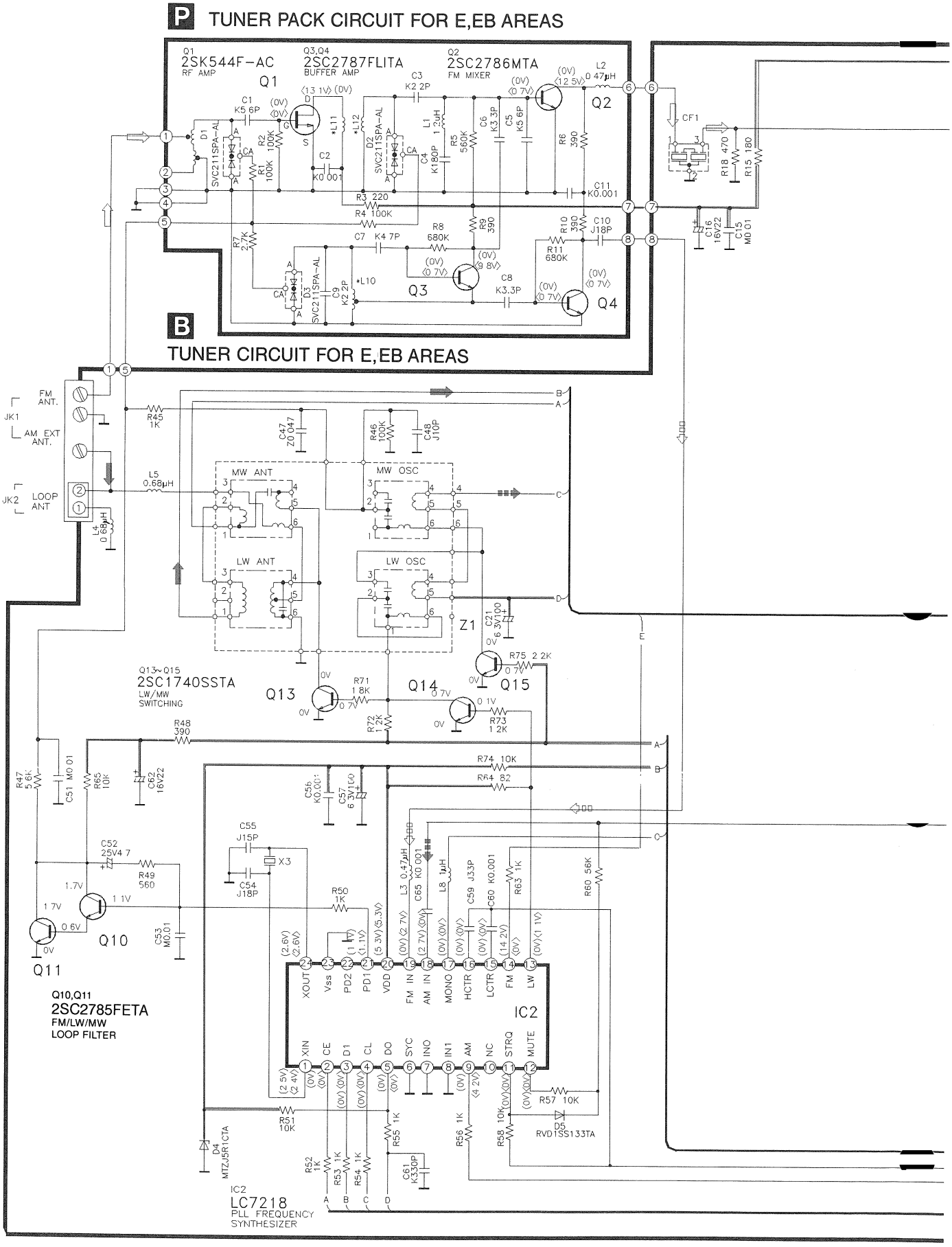
P TUNER PACK CIRCUIT FOR E,EB AREAS
Q1
2SK544F-AC
RF AMP
Q3,Q4
2SC2787FLITA
BUFFER AMP
Q2
2SC2786MTA
FM MIXER
B TUNER CIRCUIT FOR E,EB AREAS
FM ANT.
AM EXT ANT.
LOOP ANT
JK1
JK2
MW ANT
MW OSC
LW ANT
LW OSC
Z1
Q13~Q15
2SC1740SSTA
LW/MW SWITCHING
Q10,Q11
2SC2785FETA
FM/LW/MW LOOP FILTER
IC2
LC7218
PLL FREQUENCY SYNTHESIZER
XOUT
Vss
PD2
PD1
VDD
FM IN
AM IN
MONO
HCTR
LCTR
FM
LW
XIN
CE
DI
CL
DO
SYC
INO
IN1
AM
NC
STRQ
MUTE

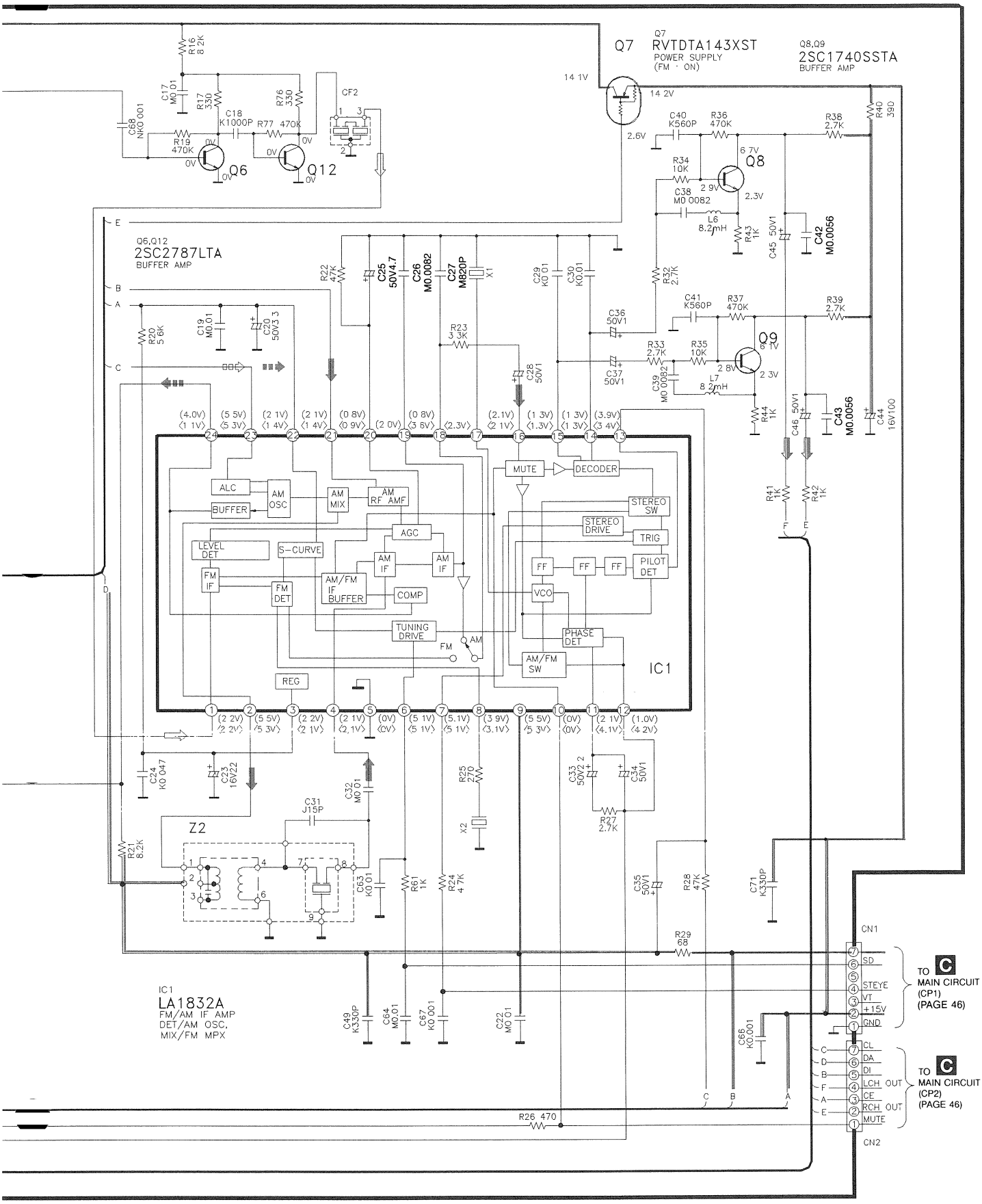
Q7
RVTDTA143XST
POWER SUPPLY
(FM · ON)
Q8,Q9
2SC1740SSTA
BUFFER AMP
Q6,Q12
2SC2787LTA
BUFFER AMP
IC1
LA1832A
FM/AM IF AMP
DET/AM OSC,
MIX/FM MPX
ALC
AM OSC
BUFFER
AM MIX
AM RF AMF
AGC
LEVEL DET
S-CURVE
FM IF
FM DET
AM/FM IF BUFFER
COMP
AM IF
TUNING DRIVE
REG
MUTE
DECODER
STEREO SW
STEREO DRIVE
TRIG
PILOT DET
FF
VCO
PHASE DET
AM/FM SW
Z2
CN1
SD
STEYE
VT
+15V
GND
CL
DA
DI
LCH OUT
CE
RCH OUT
MUTE
CN2
TO C MAIN CIRCUIT (CP1) (PAGE 46)
TO C MAIN CIRCUIT (CP2) (PAGE 46)

B TUNER CIRCUIT FOR EG AREA

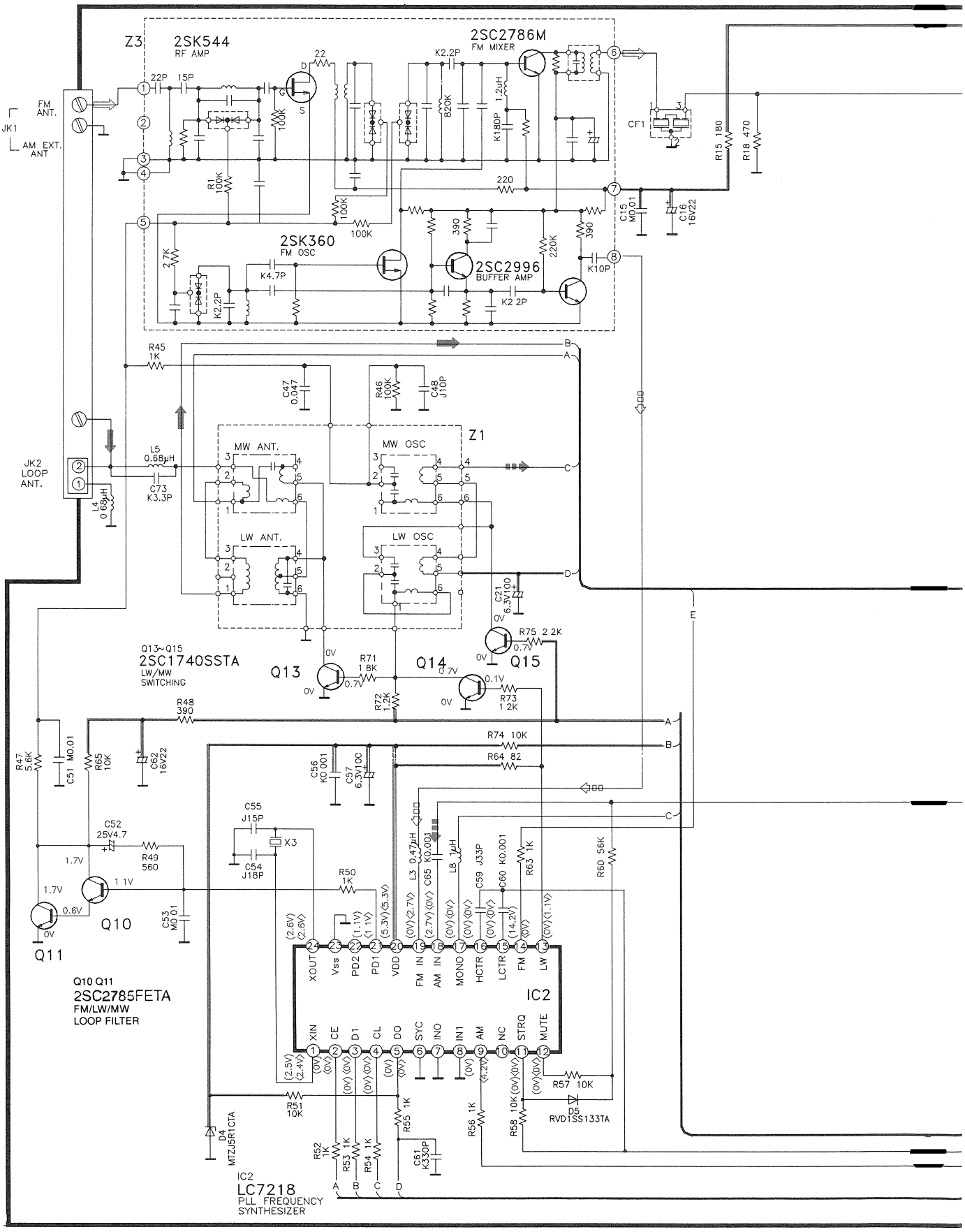

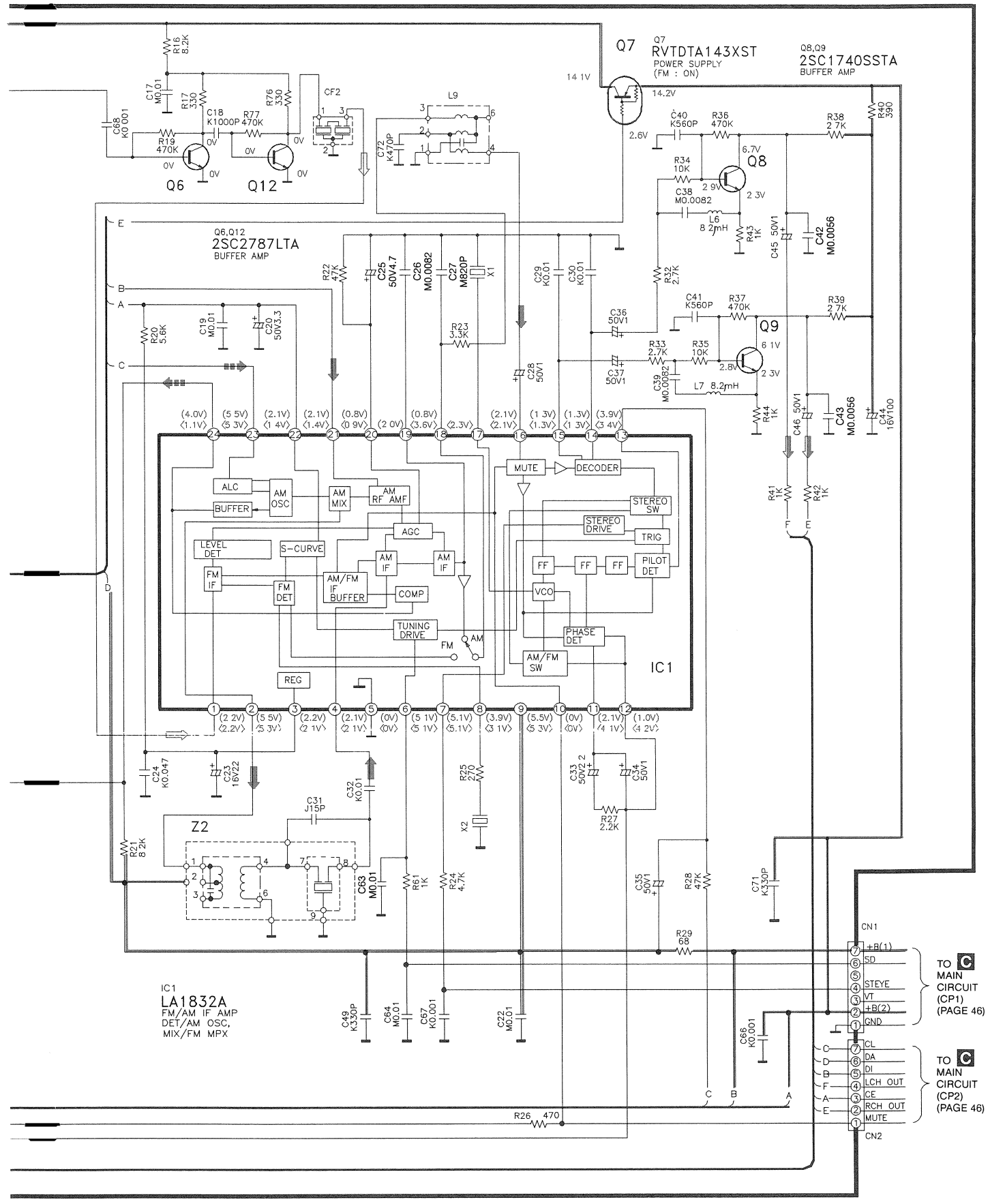
Q7
RVTDTA143XST
POWER SUPPLY
(FM : ON)
Q8,Q9
2SC1740SSTA
BUFFER AMP
Q6,Q12
2SC2787LTA
BUFFER AMP
Q6
Q12
Q8
Q9
IC1
LA1832A
FM/AM IF AMP
DET/AM OSC,
MIX/FM MPX
ALC
AM OSC
BUFFER
AM MIX
AM RF AMP
AGC
LEVEL DET
S-CURVE
FM IF
FM DET
AM/FM IF BUFFER
COMP
AM IF
TUNING DRIVE
REG
MUTE
DECODER
STEREO SW
STEREO DRIVE
TRIG
FF
PILOT DET
VCO
PHASE DET
AM/FM SW
FM
AM
Z2
CF2
L9
CN1
+B(1)
SD
STEYE
VT
+B(2)
GND
CL
DA
DI
LCH OUT
CE
RCH OUT
MUTE
CN2
TO C MAIN CIRCUIT (CP1) (PAGE 46)
TO C MAIN CIRCUIT (CP2) (PAGE 46)

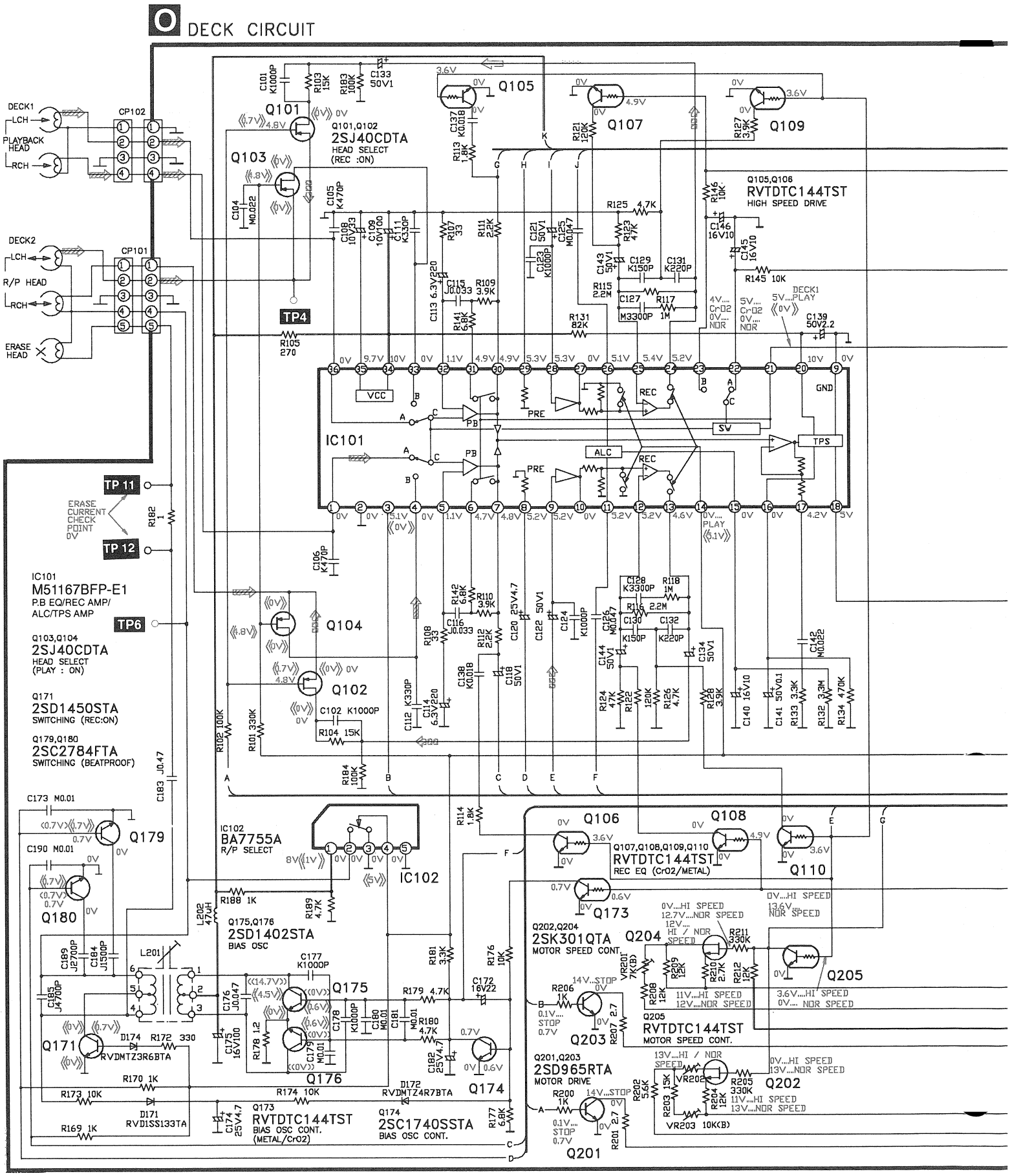
DECK CIRCUIT
DECK1
LCH
PLAYBACK HEAD
RCH
CP102
DECK2
LCH
R/P HEAD
RCH
CP101
ERASE HEAD
Q101,Q102
2SJ40CDTA
HEAD SELECT
(REC :ON)
Q105,Q106
RVTDTC144TST
HIGH SPEED DRIVE
TP4
TP11
TP12
ERASE CURRENT CHECK POINT
IC101
M51167BFP-E1
P.B EQ/REC AMP/
ALC/TPS AMP
TP6
Q103,Q104
2SJ40CDTA
HEAD SELECT
(PLAY : ON)
Q171
2SD1450STA
SWITCHING (REC:ON)
Q179,Q180
2SC2784FTA
SWITCHING (BEATPROOF)
IC102
BA7755A
R/P SELECT
Q175,Q176
2SD1402STA
BIAS OSC
Q171
RVDMTZ3R6BTA
Q173,Q174
RVTDTC144TST
BIAS OSC CONT.
(METAL/CrO2)
Q174
2SC1740SSTA
BIAS OSC CONT.
Q106,Q107,Q108,Q109,Q110
RVTDTC144TST
REC EQ (CrO2/METAL)
Q202,Q204
2SK301QTA
MOTOR SPEED CONT.
Q205
RVTDTC144TST
MOTOR SPEED CONT.
Q201,Q203
2SD965RTA
MOTOR DRIVE
Q201

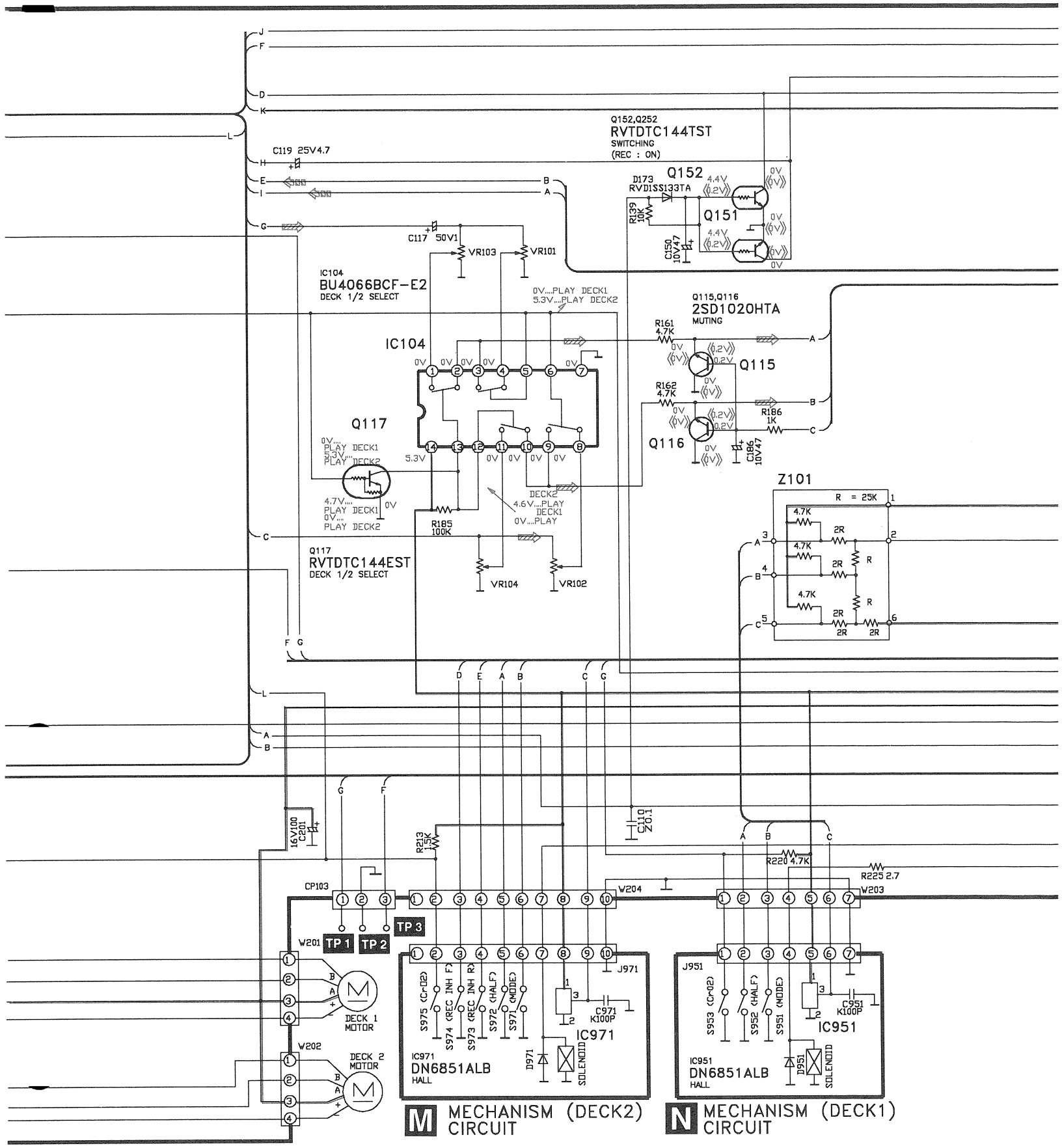
Q152,Q252
RVTDTC144TST
SWITCHING
(REC : ON)
Q152
Q151
D173
RVD1SS133TA
R139 10K
C150 10V47
C119 25V4.7
C117 50V1
VR103
VR101
IC104
BU4066BCF-E2
DECK 1/2 SELECT
0V....PLAY DECK1
5.3V....PLAY DECK2
Q115,Q116
2SD1020HTA
MUTING
R161 4.7K
R162 4.7K
Q115
Q116
R186 1K
C186 10V47
Q117
RVTDTC144EST
DECK 1/2 SELECT
R185 100K
VR104
VR102
Z101
R = 25K
CP103
W204
W203
W201
W202
TP 1
TP 2
TP 3
DECK 1 MOTOR
DECK 2 MOTOR
J971
IC971
DN6851ALB
HALL
SOLENOID
J951
IC951
DN6851ALB
HALL
C971 K100P
C951 K100P
C110 20.1
16V100 C201
R213 15K
R220 4.7K
R225 2.7
M MECHANISM (DECK2) CIRCUIT
N MECHANISM (DECK1) CIRCUIT

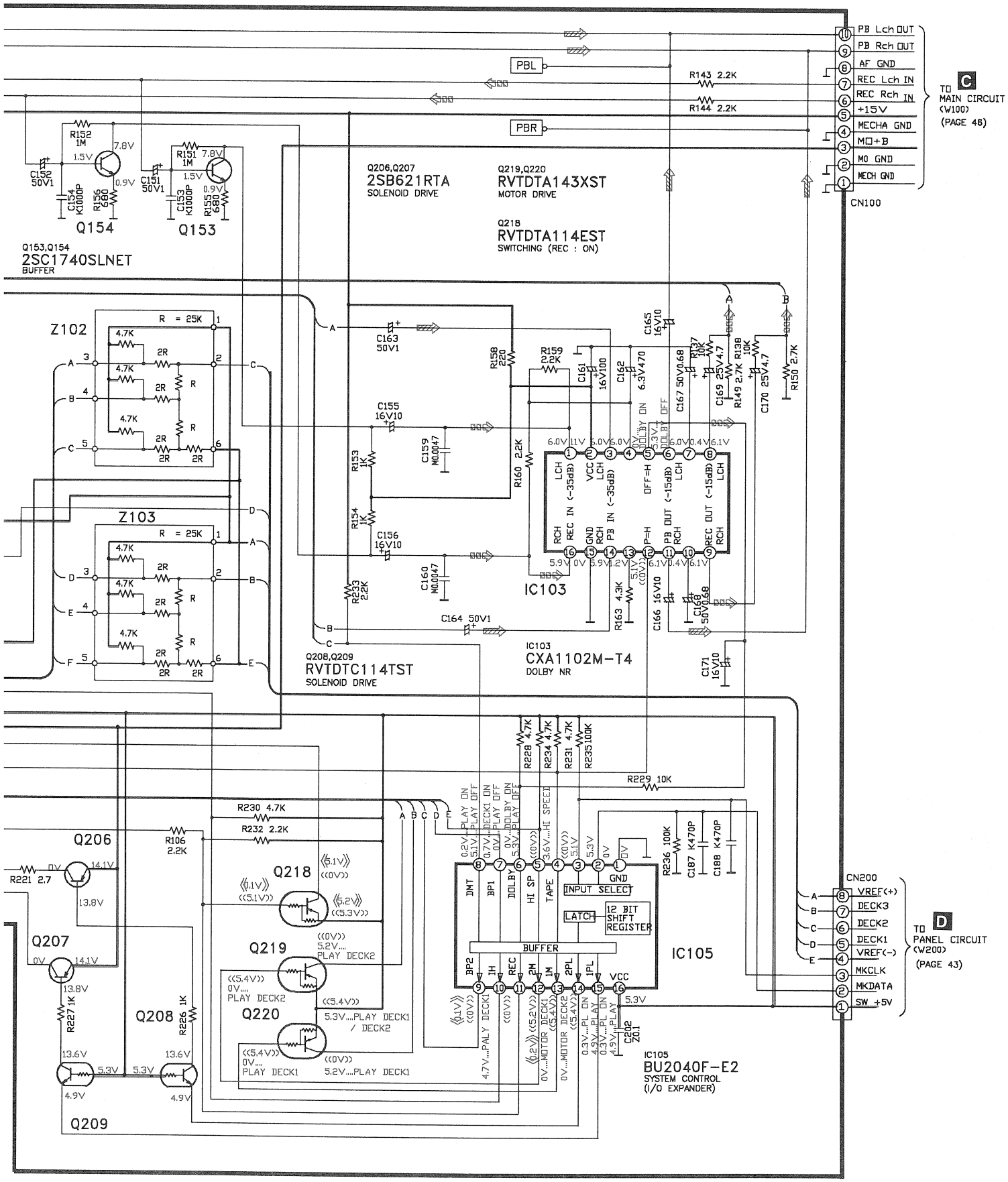
PB Lch OUT
PB Rch OUT
AF GND
REC Lch IN
REC Rch IN
+15V
MECHA GND
MO+B
MO GND
MECH GND
CN100
TO MAIN CIRCUIT (W100) (PAGE 46)
PBL
PBR
R143 2.2K
R144 2.2K
Q206,Q207
2SB621RTA
SOLENOID DRIVE
Q219,Q220
RVTDTA143XST
MOTOR DRIVE
Q218
RVTDTA114EST
SWITCHING (REC : ON)
Q153,Q154
2SC1740SLNET
BUFFER
Q154
Q153
Z102
Z103
R = 25K
IC103
CXA1102M-T4
DOLBY NR
Q208,Q209
RVTDTC114TST
SOLENOID DRIVE
Q206
Q207
Q208
Q209
Q218
Q219
Q220
IC105
BU2040F-E2
SYSTEM CONTROL
(I/O EXPANDER)
INPUT SELECT
LATCH
12 BIT SHIFT REGISTER
BUFFER
CN200
VREF(+)
DECK3
DECK2
DECK1
VREF(-)
MKCLK
MKDATA
SW +5V
TO PANEL CIRCUIT (W200) (PAGE 43)

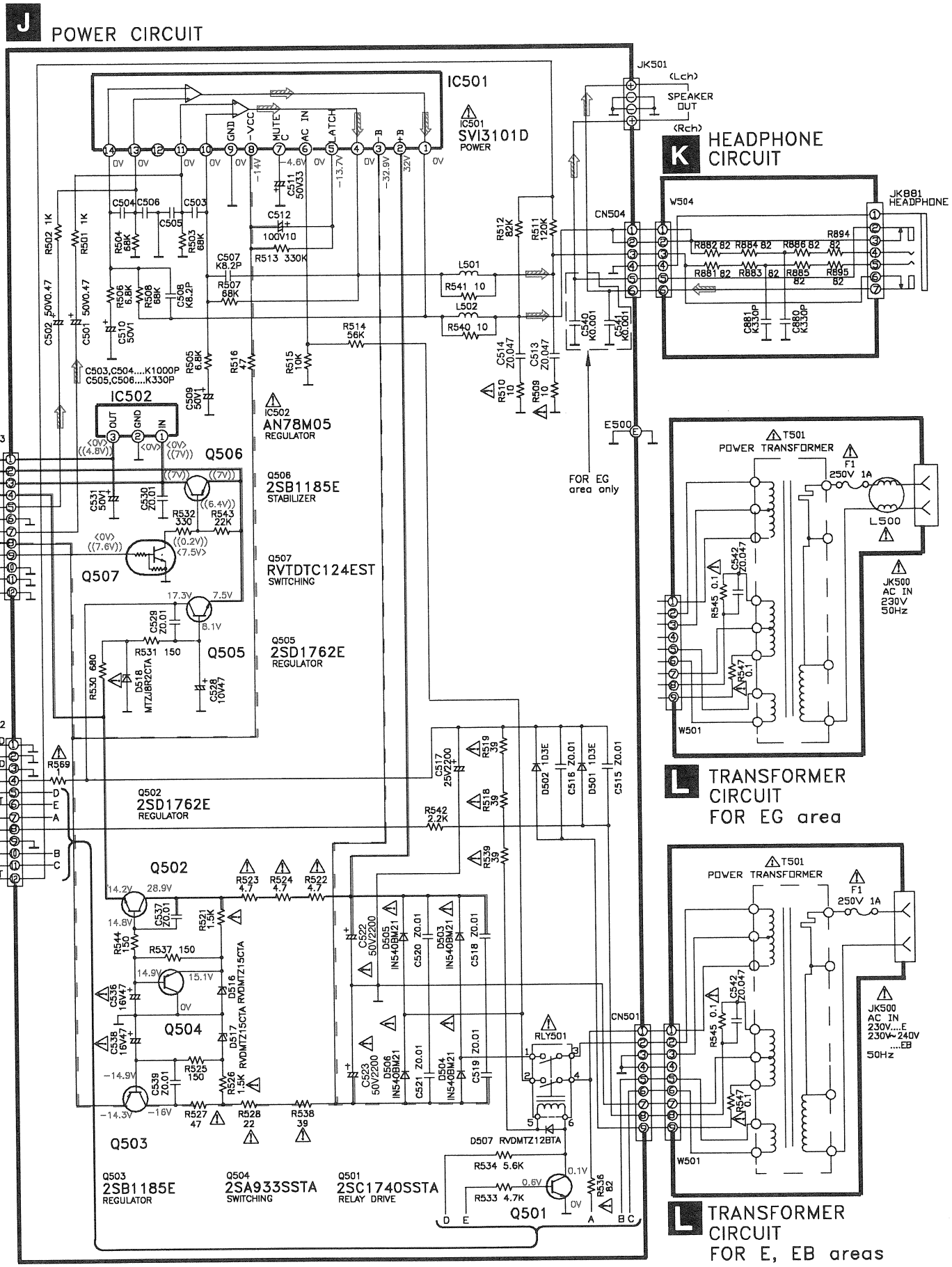
J POWER CIRCUIT
IC501
IC501
SVI3101D
POWER
JK501
(Lch)
SPEAKER OUT
(Rch)
K HEADPHONE CIRCUIT
JK881 HEADPHONE
CN504
W504
IC502
IC502
AN78M05
REGULATOR
Q506
Q506
2SB1185E
STABILIZER
Q507
RVTDTC124EST
SWITCHING
Q505
2SD1762E
REGULATOR
Q502
2SD1762E
REGULATOR
Q503
2SB1185E
REGULATOR
Q504
2SA933SSTA
SWITCHING
Q501
2SC1740SSTA
RELAY DRIVE
Q501
CN503
CN502
CN501
TO MAIN CIRCUIT (CP503) (PAGE 47)
TO MAIN CIRCUIT (CP502) (PAGE 47)
FOR EG area only
E500
T501
POWER TRANSFORMER
F1
250V 1A
L500
JK500
AC IN
230V
50Hz
W501
L TRANSFORMER CIRCUIT FOR EG area
JK500
AC IN
230V...E
230V~240V
...EB
50Hz
L TRANSFORMER CIRCUIT FOR E, EB areas
RLY501
D507 RVDMTZ12BTA
C503,C504....K1000P
C505,C506....K330P

G LOADING MOTOR CIRCUIT

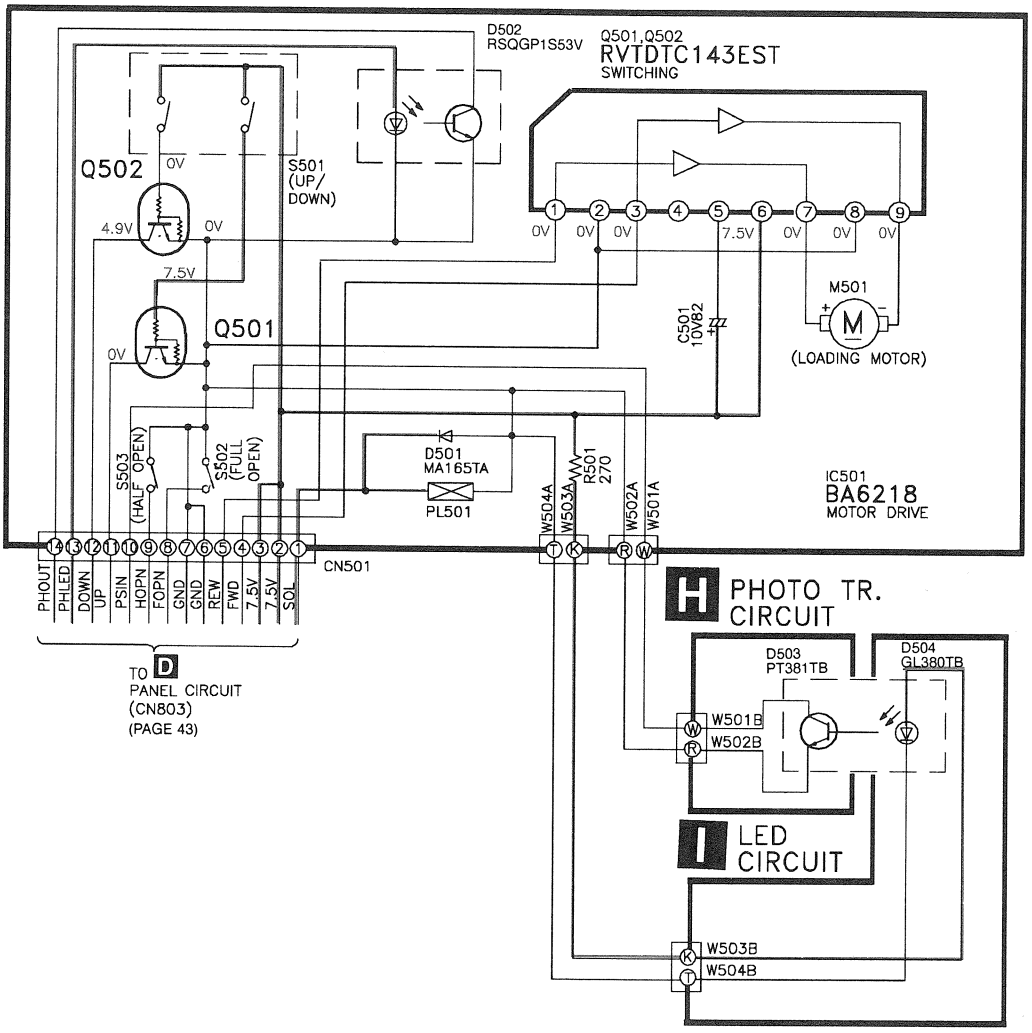

Troubleshooting Guide

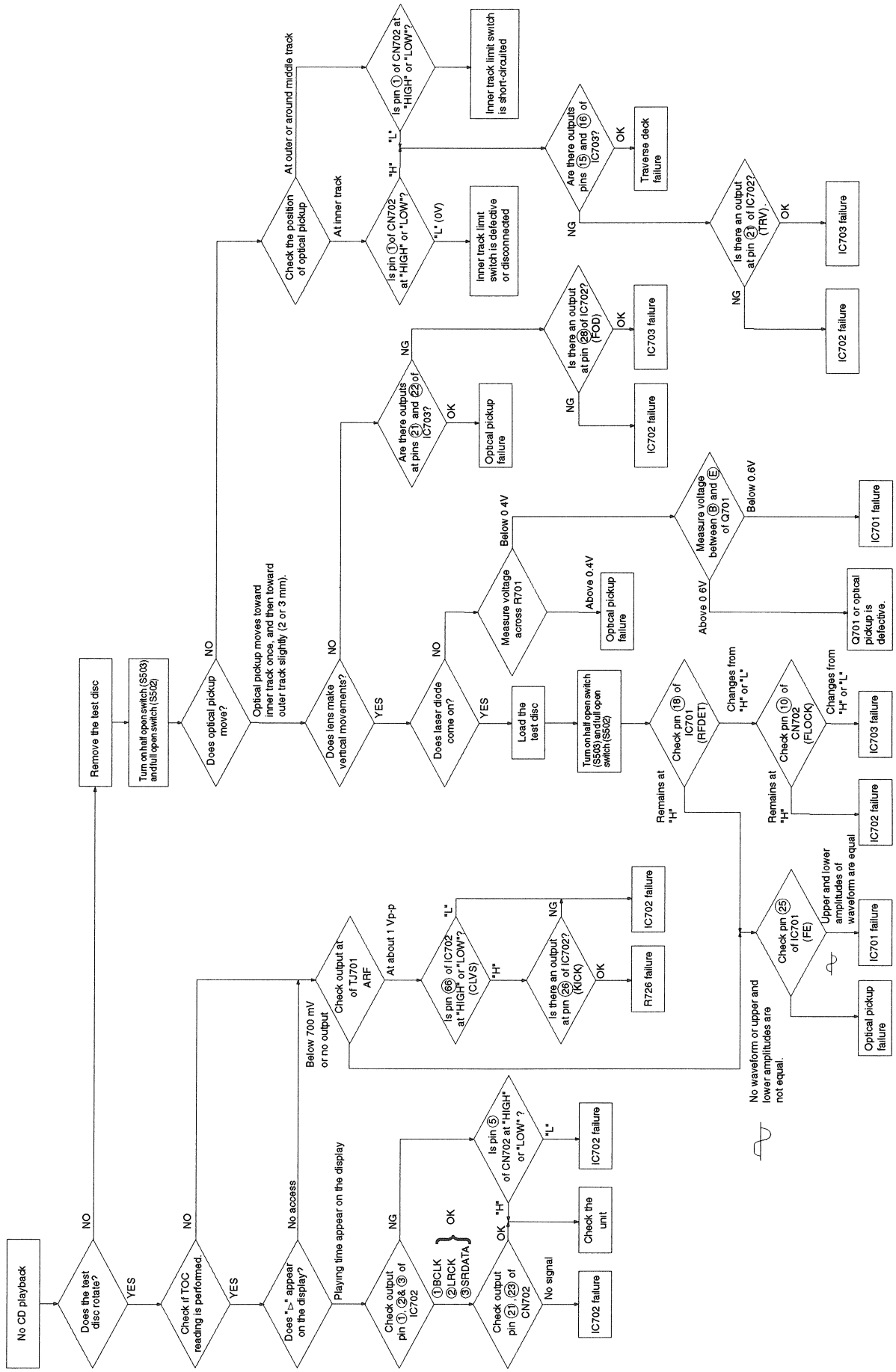

Mechanism Parts Location (RAA0372)

DECK 1(PLAYBACK)

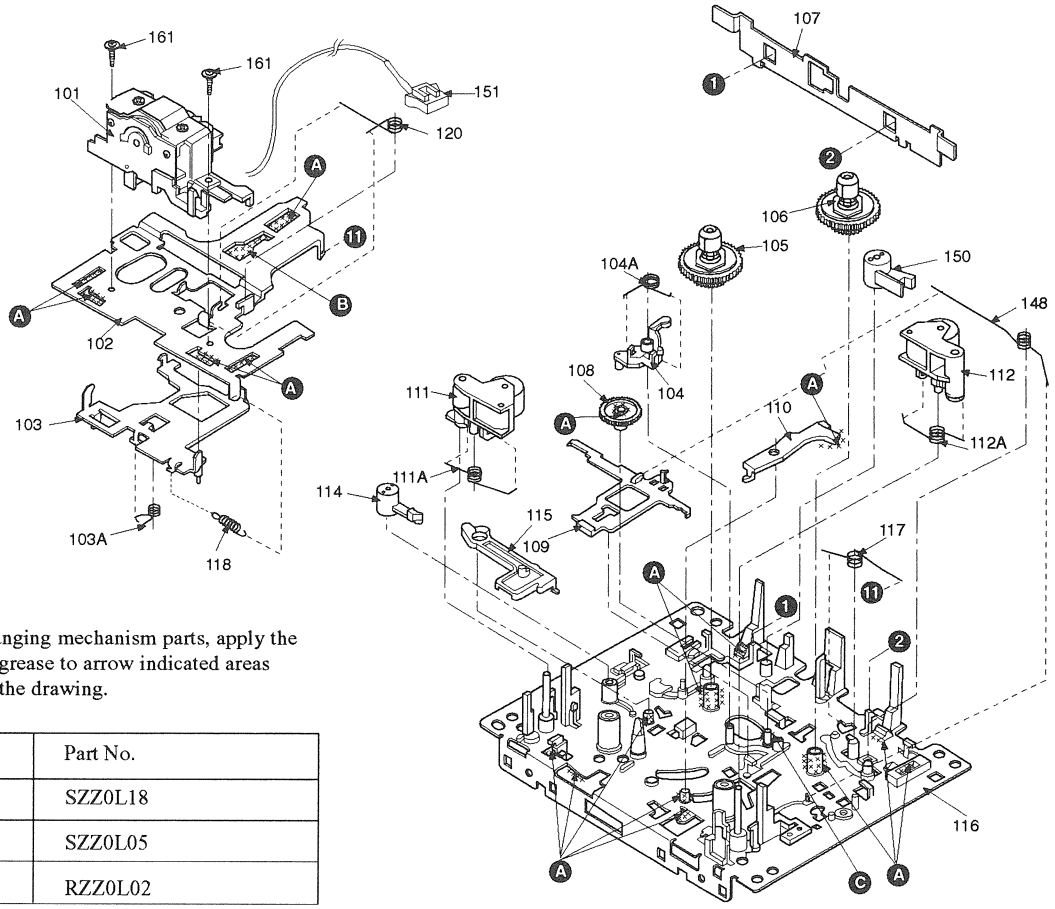

Note:
When changing mechanism parts, apply the specified grease to arrow indicated areas shown in the drawing.

Ref No.	Part No.
A	SZZ0L18
B	SZZ0L05
C	RZZ0L02

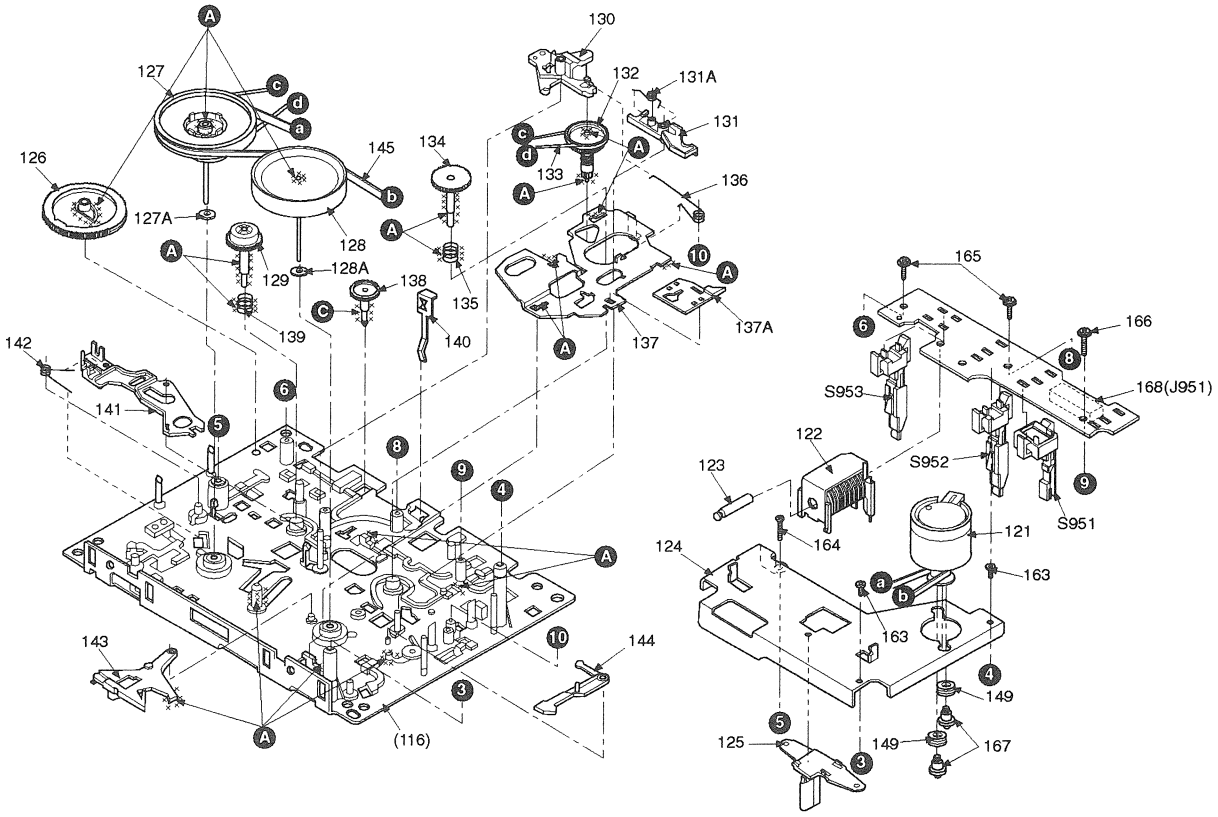

Mechanism Parts Location (RAA0373)

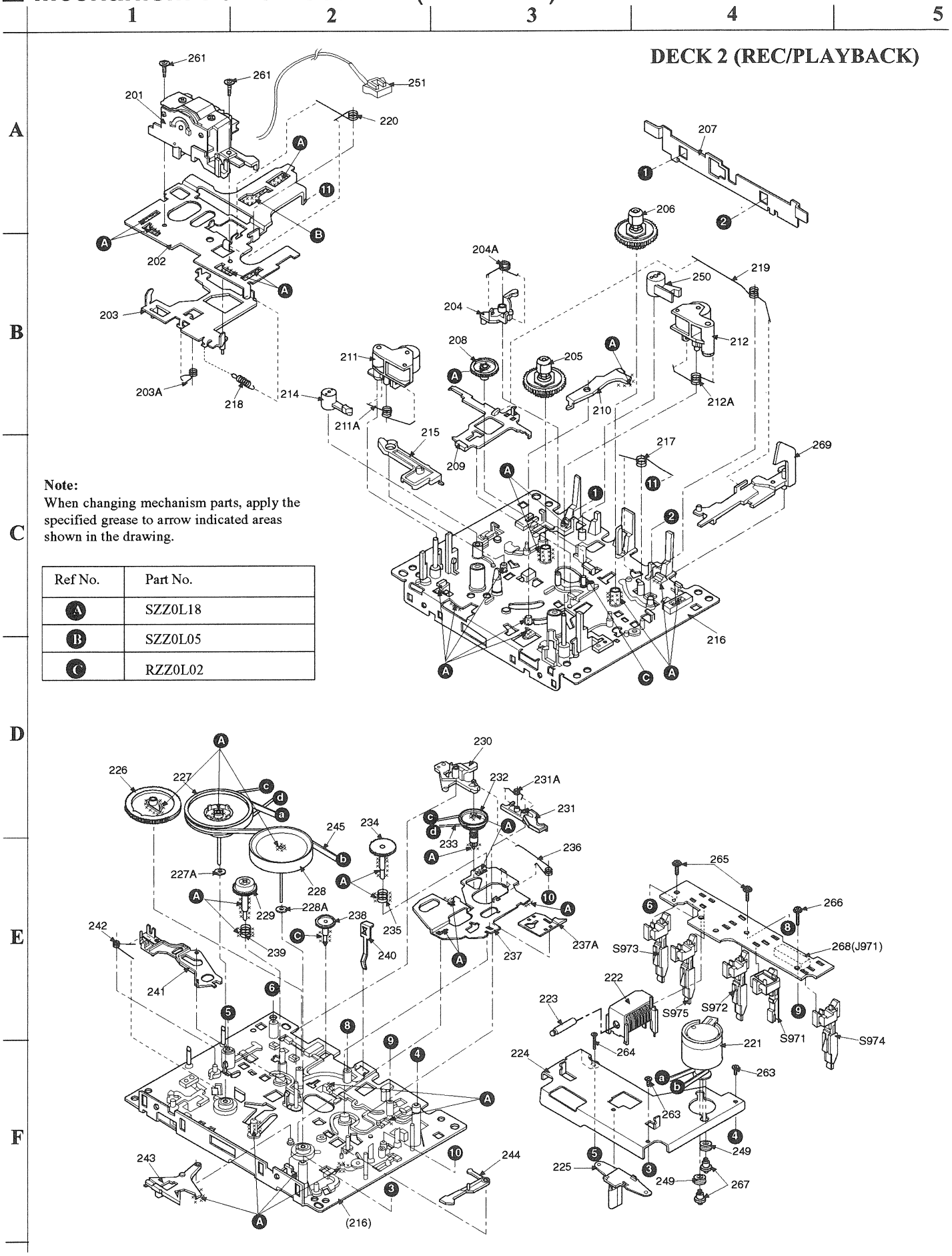

Note:
When changing mechanism parts, apply the specified grease to arrow indicated areas shown in the drawing.

Ref No.	Part No.
A	SZZ0L18
B	SZZ0L05
C	RZZ0L02

Mechanism Parts List

[M] marks in Remarks column indicates parts that are supplied by MESA.

Ref. No.	Part No.	Part Name & Description	Remarks
		CASSETTE DECK	
		<DECK 1>	
101	RXQ0383	HEAD BLOCK ASS'Y	
102	RUA793ZF	CHASSIS	
103	RZLAR300A	LEVER ASS'Y	
103A	RUW143ZA	SPRING	
104	1UB0089Z	ARM	
104A	RUW148ZA	SPRING	
105	1DM0018ZB	REEL TABLE ASS'Y	
106	1DM0017ZB	REEL TABLE ASS'Y	
107	RML0069-1	LEVER	
108	RDG5772ZC	GEAR	
109	RUB508ZB	LEVER	
110	RUB506ZB	LEVER	
111	1UB0088ZB	PINCH ROLLER	
111A	RUW141ZA	SPRING	
112	1UB0087ZB	PINCH ROLLER	
112A	RUW140ZB	SPRING	
114	RNL1ZD	ARM	
115	RUB503ZD	LEVER	
116	RZUAR300A	CHASSIS ASS'Y	
117	RUW142ZA	SPRING	
118	RUD105ZA	SPRING	
120	RUW139ZA	SPRING	
121	RFM133ZA	MOTOR ASS'Y	
122	1UE0015ZB	PLUNGER	
123	RUB428ZE	SHAFT	
124	RUL1030YA	PLATE	
125	RMD5014ZC	SPACER	
126	RDG5927ZG	GEAR	
127	1DW0037ZB	FLYWHEEL ASS'Y	
127A	RNW139ZA	WASHER	
128	1DW0038ZB	FLYWHEEL ASS'Y	
128A	RNW138ZA	WASHER	
129	1DG0006ZB	GEAR ASS'Y	
130	RUB513ZD	ARM	
131	1UB0091Z	LEVER	
131A	RUW146ZA	SPRING	
132	1DR0011ZB	PULLEY ASS'Y	
133	RDV90ZB	BELT	
134	RDG5769ZA	GEAR	
135	RUQ111ZB	SPRING	
136	RUW145ZA	SPRING	
137	1UB0090ZA	ROD	
137A	RUB512ZB	ROD	
138	RDG5773ZB	GEAR	
139	RUQ112ZA	SPRING	
140	RUS609ZC	SPRING	
141	RUB514ZC	LEVER	
142	RUW147ZA	SPRING	
143	RUB515ZA	LEVER	
144	RUB509ZA	LEVER	
145	RDV108ZA	BELT	
148	RUW144ZA	SPRING	
149	RMG0102-1	RUBBER	
150	RNL180ZB	LEVER	
151	REXX0107	P HEAD WIRE	[M]
161	XTW2+6L	SCREW	
163	XTN26+7J	SCREW	
164	RHE5203ZA	SCREW	
165	XTW2+8S	SCREW	
166	XYC2+JF16	SCREW	
167	RHD26002	SCREW	
168	RJS7T7ZA	CONNECTOR (J951)	
		<DECK 2>	
201	RXQ0384	HEAD BLOCK ASS'Y	
202	RUA793ZF	CHASSIS	
203	RZLAR300A	LEVER ASS'Y	
203A	RUW143ZA	SPRING	
204	1UB0089Z	ARM	
204A	RUW148ZA	SPRING	
205	1DM0018ZB	REEL TABLE ASS'Y	
206	1DM0017ZB	REEL TABLE ASS'Y	
207	RML0069-1	LEVER	
208	RDG5772ZC	GEAR	
209	RUB508ZB	LEVER	
210	RUB506ZB	LEVER	
211	1UB0088ZB	PINCH ROLLER	
211A	RUW141ZA	SPRING	
212	1UB0087ZB	PINCH ROLLER	
212A	RUW140ZB	SPRING	
214	RNL1ZD	ARM	
215	RUB503ZD	LEVER	
216	RZUAR300A	CHASSIS ASS'Y	
217	RUW142ZA	SPRING	
218	RUD105ZA	SPRING	
219	RUW144ZA	SPRING	
220	RUW139ZA	SPRING	

Ref. No.	Part No.	Part Name & Description	Remarks
221	RFM133ZA	MOTOR ASS'Y	
222	1UE0015ZB	PLUNGER	
223	RUB428ZE	SHAFT	
224	RUL1030YA	PLATE	
225	RMD5014ZC	SPACER	
226	RDG5927ZG	GEAR	
227	1DW0037ZB	FLYWHEEL ASS'Y	
227A	RNW139ZA	WASHER	
228	1DW0038ZB	FLYWHEEL ASS'Y	
228A	RNW138ZA	WASHER	
229	1DG0006ZB	GEAR ASS'Y	
230	RUB513ZD	LEVER	
231	1UB0091Z	LEVER	
231A	RUW146ZA	SPRING	
232	1DR0011ZB	PULLEY ASS'Y	
233	RDV90ZB	BELT	
234	RDG5769ZA	GEAR	
235	RUQ111ZB	SPRING	
236	RUW145ZA	SPRING	
237	1UB0090ZA	ROD	

Ref. No.	Part No.	Part Name & Description	Remarks
237A	RUB512ZB	ROD	
238	RDG5773ZA	GEAR	
239	RUQ112ZA	SPRING	
240	RUS609ZC	SPRING	
241	RUB514ZC	LEVER	
242	RUW147ZA	SPRING	
243	RUB515ZA	LEVER	
244	RUB509ZA	LEVER	
245	RDV108ZA	BELT	
249	RMG0102-1	RUBBER	
250	RNL180ZB	LEVER	
251	REX0305	R/P HEAD WIRE	[M]
261	XTW2+6L	SCREW	
263	XTN26+7J	SCREW	
264	RHE5203ZA	SCREW	
265	XTW2+8S	SCREW	
266	XYC2+JF16	SCREW	
267	RHD26002	SCREW	
268	RJS10T7ZA	SOCKET (J971)	
269	RUB507ZD	EJECT ROD	

■ CD Loading Unit Parts List

Ref. No.	Part No.	Part Name & Description	Remarks
		CD LOADING UNIT	
301	RDG0194	GEAR	
302	RDG0223	GEAR	
303	RDG0224	GEAR	
304	RDG0244	GEAR	
305	RDG0245	GEAR	
306	RDK0022	GEAR	
307	RDK0023	GEAR	
308	RFKPLCH555PK	MOTOR ASS'Y	
309	RDP0058	GEAR	
310	RDV0025	BELT	
311	RMN0204	SENSOR HOLDER	
312	RMN0222	LED HOLDER	
313	RHD30029	SCREW	
314	RMA0653	ANGLE	
315	RME0120	SPRING	
316	RME0121	SPRING	
317	RME0137	SPRING	
318	RML0177	LEVER	
319	RML0288	LEVER	
320	RML0289	LEVER	
321	RMM0097	SLIDE PLATE(1)	

Ref. No.	Part No.	Part Name & Description	Remarks
322	RMM0098	SLIDE PLATE(2)	
323	RMM0099	SLIDE PLATE(3)	
324	RMS0398	PLUNGER	
325	RMX0072	LEVER	
326	RSJ0003	SOLENOID(PL501)	
327	SDRD14	ROLLER	
328	XTB3+10JFZ	SCREW	
329	RFKJLCH555PB	MECH CHASSIS ASS'Y	
330	RAE0113Z	TRAVERSE UNIT	
330-1	SHGD112	FLOATING RUBBER(A)	
330-2	SHGD113-1	FLOATING RUBBER(B)	
330-3	XQS2+A35FZ	SCREW	
331	RME0109	FLOATING SPRING A	
332	RME0142	FLOATING SPRING B	
333	RMS0123-1	FIXED PIN A	
334	RMS0350	FIXED PIN B	
335	RMR0698-K	TRAVERSE CHASSIS	
336	XTV2+6G	SCREW	
337	RHD26014	SCREW	

■ CD Loading Unit Parts Location

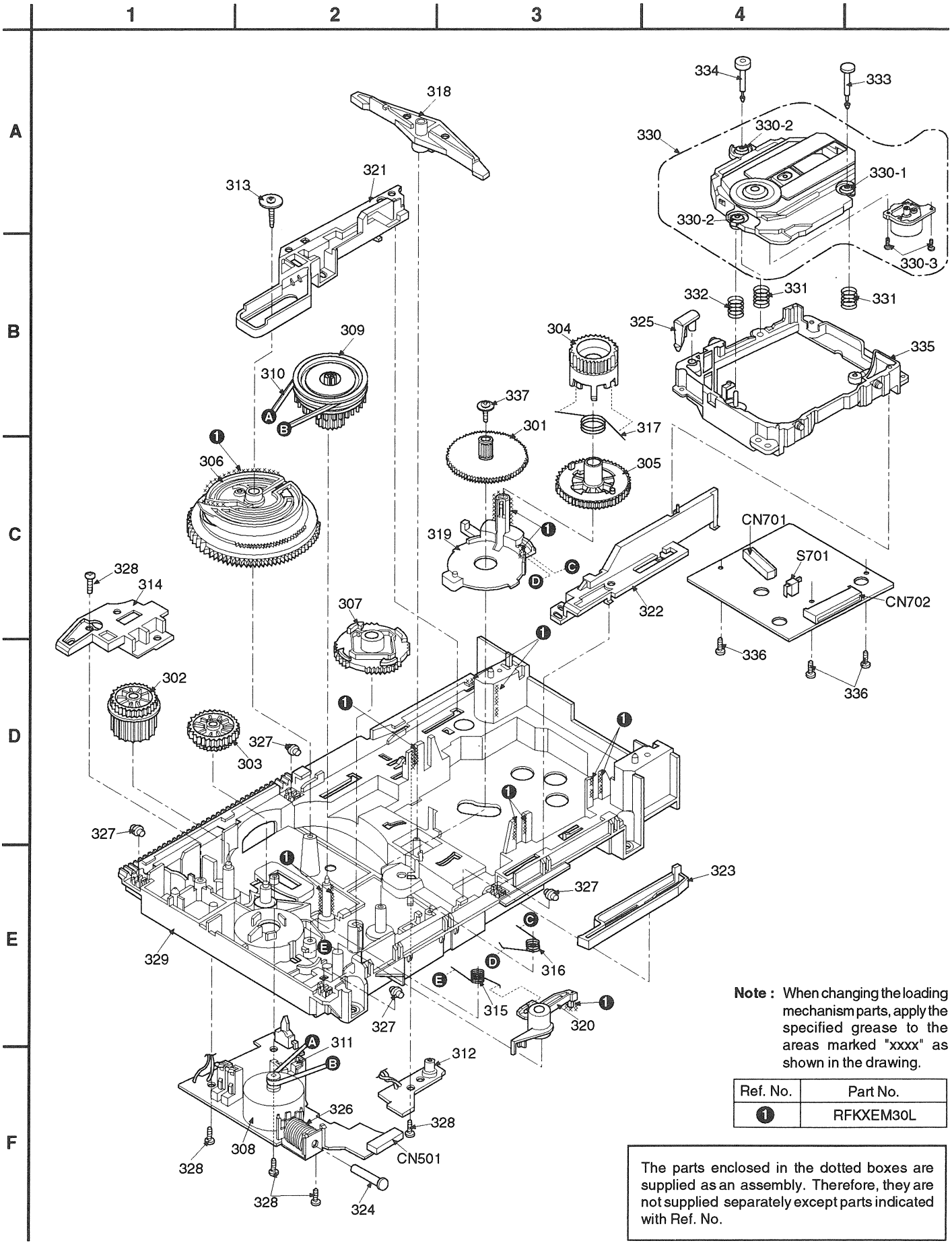

Note : When changing the loading mechanism parts, apply the specified grease to the areas marked "xxxx" as shown in the drawing.

Ref. No.	Part No.
❶	RFKXEM30L

The parts enclosed in the dotted boxes are supplied as an assembly. Therefore, they are not supplied separately except parts indicated with Ref. No.

Cabinet Parts Location

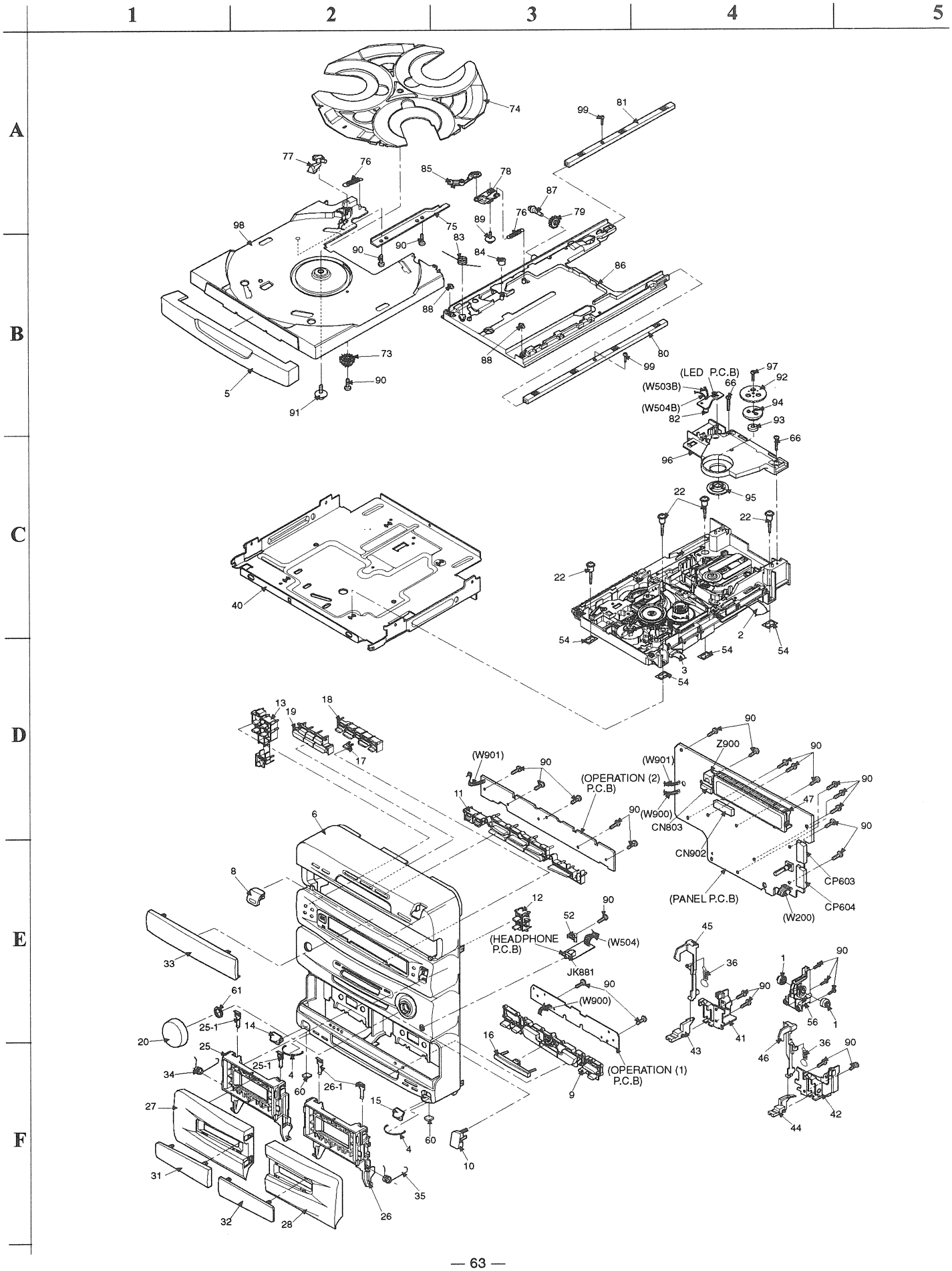

■ Cabinet Parts Location

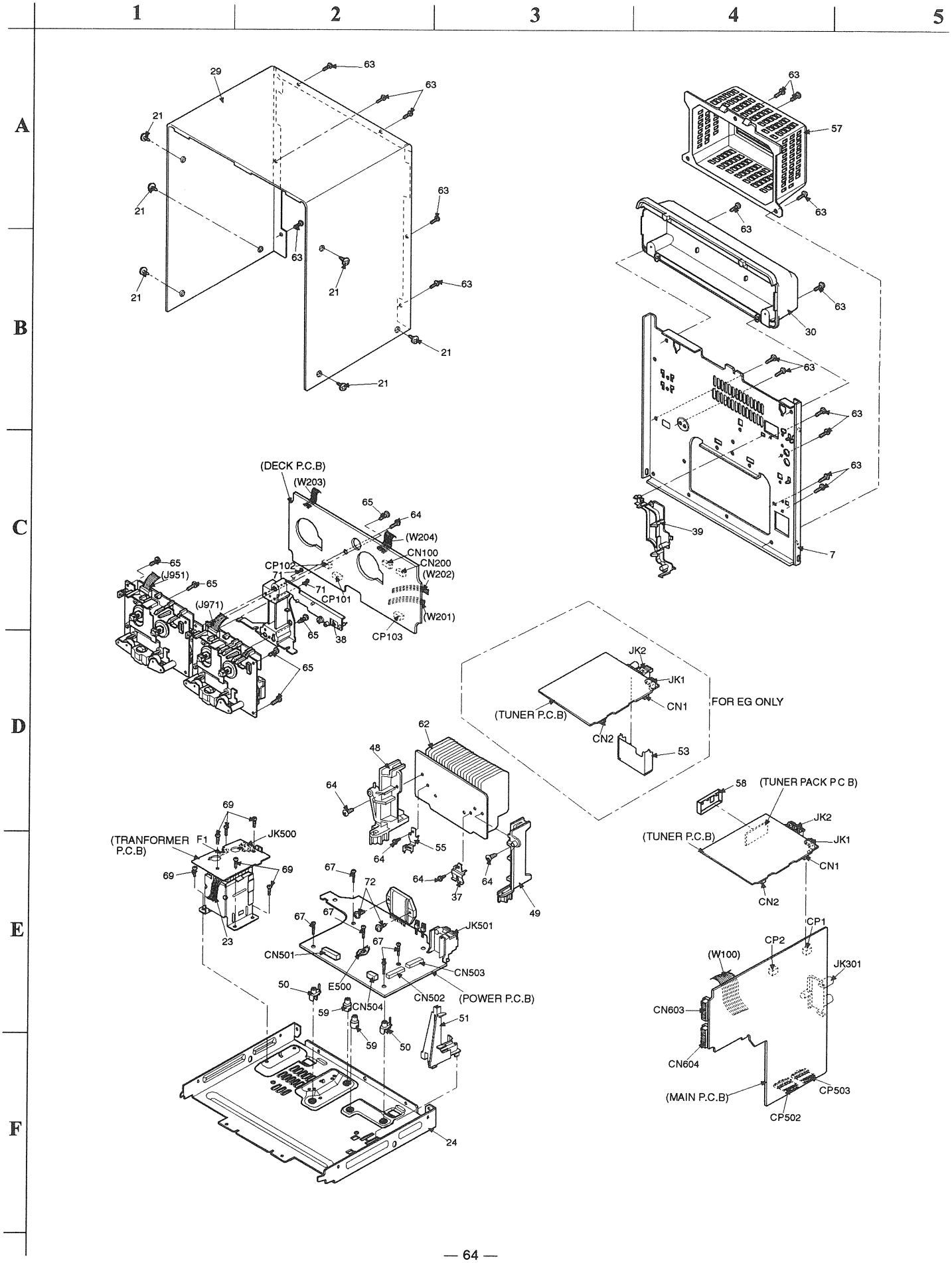

Replacement Parts List

Notes:
- Important safety notice:
  Components identified by ⚠ mark have special characteristics important for safety.
  Furthermore, special parts which have purposes of fire-retardant (resistors), high-quality sound (capacitors), low noise (resistors), etc are used.
  When replacing any of these components, be sure to use only manufacturer's specified parts shown in the parts list .
- The parenthesized indications in the Remarks columns specify the areas. (Refer to the cover page for area)
  Parts without these indications can be used for all areas.
- [M] Indicates in the Remarks columns indicates parts supplied by **MESA.**
- Warning : This product uses a laser diode. Refer to caution statements on page 3.
  ACHTUNG : • Die lasereinheit nicht zerlegen.
  • Die lasereinheit darf nur gegen eine vom hertsteller spezifizierte einheit ausgetauscht werden.

Ref. No.	Part No.	Part Name & Description	Remarks
		CABINET AND CHASSIS	
1	RDG0129	DAMPER GEAR	[M]
2	REE0550A	23P FFC	[M]
3	REE0615	14P FFC	[M]
4	RGK0608-N	LEG ORNAMENT	[M]
5	RFKNACH72E-K	CD LID	[M]
6	RGP0446B-K1	FRONT PANEL	[M]
7	RGR0206B-B	REAR PANEL	[M] (E)
7	RGR0206B-C	REAR PABEL	[M] (EG)
7	RGR0206B-D	REAR PANEL	[M] (EB)
8	RGU1181-K	CD OPEN/CLOSE BUTTON	[M]
9	RGU1182-S	CASSETTE BUTTON	[M]
10	RGU1183-S	TUNER BUTTON	[M]
11	RGU1184-S	CD BUTTON	[M]
12	RGU1185-S	MEMORY BUTTON	[M]
13	RGU1186-S	POWER TIMER BUTTON	[M]
14	RGU1187-K	EJECT KNOB (L)	[M]
15	RGU1188-K	EJECT KNOB (R)	[M]
16	RGU1189-S	FF/REW BUTTON	[M]
17	RGU1190-Q	SURROUND BUTTON	[M]
18	RGU1191-K	SURROUND MODE BUTTON	[M]
19	RGU1192A-S	SELECTOR BUTTON	[M]
20	RGW0194-S	VOLUME KNOB	[M]
21	RHD30007	SCREW	
22	RHD30043	SCREW	
23	REX0651	11P WIRE	[M]
24	RFKJACH410GK	BOTTOM CHASSIS ASS'Y	[M]
25	RFKLACH455P3	CASS. HOLDER ASS'Y (L)	[M]
25-1	RUS757ZAA	CASS. HALF SPRING	[M]
26	RFKLACH455P4	CASS. HOLDER ASS'Y (R)	[M]
26-1	RUS757ZAA	CASS. HALF SPRING	[M]
27	RKF0418-K	CASSETTE LID (L)	[M]
28	RKF0419-K	CASSETTE LID (R)	[M]
29	RKM0283AZ-K	CABINET	[M]
30	RKQ0176-K	CHANGER REAR COVER	[M]
31	RKW0373-Q	CASSETTE WINDOW (L)	[M]
32	RKW0374-Q	CASSETTE WINDOW (R)	[M]
33	RKW0375-Q	FL WINDOW	[M]
34	RMB0293	CASS. OPEN SPRING (L)	[M]
35	RMB0294	CASS. OPEN SPRING (R)	[M]
36	RMB0295	EJECT SPRING	[M]
37	RMC0158-S	TRANSISTOR HOLDER	[M]
38	RMK0059-1E	CASSETTE PCB SUPPORT	[M]
39	RMR0868-X	JACK SUPPORT	[M] (E, EB)
39	RMR0868A-X	JACK SUPPORT	[M] (EG)
40	RMK0275	CHANGER CHASSIS	[M]
41	RML0301	EJECT LEVER STAND (L)	[M]
42	RML0302	EJECT LEVER STAND (R)	[M]
43	RML0303	EJECT LEVER (L)	[M]
44	RML0304	EJECT LEVER (R)	[M]
45	RMM0102	EJECT ROD (L)	[M]
46	RMM0103	EJECT ROD (R)	[M]
47	RMN0305	FL HOLDER	[M]
48	RMR0653-K	HEAT SINK SUPPORT (L)	[M]
49	RMR0654-K	HEAT SINK SUPPORT (R)	[M]
50	RMR0741-X	PCB SUPPORT (PIN)	[M]
51	RMR0821-X	MAIN PCB SUPPORT	[M]
52	RMR0823-X	HP JACK HOLDER	[M]
53	RSC0403	EARTH PLATE	[M] (EG)
54	RMG0319-K	RUBBER CUSHION	
55	RSC0362	HEAT SINK PLATE	[M]
56	RMS0401	DAMPER GEAR HOLDER	[M]
57	RMV0085	HEAT SINK COVER	[M]
58	RSC0027	SHIELD COVER	(E, EB)
59	SHE187-4	PCB SUPPORT	
60	SHS3276	LEG FELT	[M]
61	XNS9D	NUT	
62	RXX0102	HEAT SINK UNIT	[M]
63	XTBS3+8JFZ1	SCREW	
64	XTB3+12J	SCREW	
65	XTB3+12JFR	SCREW	
66	XTB3+16JFZ	CLAMPER ASS'Y SCREW	
67	XTB3+20J	SCREW	
69	XTB3+8J	SCREW	

Ref. No.	Part No.	Part Name & Description	Remarks
71	XTV26+6F	SCREW	
72	XTW3+15T	SCREW	
73	RDG0228	GEAR	
74	RGT0014	ROTARY TRAY	
75	RMA0681	ANGLE	
76	RME0123	SPRING	
77	RML0312	LEVER	
78	RDG0225	GEAR	
79	RDG0227	GEAR	
80	RMA0654	ANGLE(A)	
81	RMA0655	ANGLE(B)	
82	RMN0222	LED HOLDER	
83	RME0139	SPRING	
84	RMG0293-C	RUBBER	
85	RML0291	LEVER	
86	RMR0627-K	TRAY BASE	
87	RMS0382	SHAFT	
88	SDRD14	ROLLER	
89	XTW3+6S	SCREW	
90	XTBS26+10J	SCREW	
91	XTWS3+10T	SCREW	
92	RDF0033	MAGNET HOLDER(A)	
93	RHM245ZA	MAGNET	
94	RMR0334	MAGNET HOLDER(B)	
95	RMR0624-W	DISC HOLDER	
96	RMR0625-W	DISC CLAMPER	
97	XTB3+6JFZ	SCREW	
98	RFKNLCH555PK	DISC TRAY ASS'Y	
99	XTN2+6F	SCREW	
		INTEGRATED CIRCUITS	
IC1	LA1832A	IC, IF/MPX	
IC2	LC7218	IC, PLL	
IC101	M51167BFP-E1	IC, R/P	
IC102	BA7755A	IC, SW	
IC103	CXA1102M-T4	IC, DOLBY	
IC104	BU4066BCF-E2	IC, ANALOG SW	[M]
IC105	BU2040F-E2	IC, I/O	[M]
IC300	BU4052BCF-E2	IC, ANALOG SW	
IC302	M62426FP-E1	IC, AUDIO	[M]
IC303	M51131L-702	VCA	
IC304	BU2090F-E2	IC, IO EXPANDER	[M]
IC307	BA4558FDXE2	IC, OP AMP	[M]
IC501	SVI3101D	IC, POWER	⚠
IC502	AN78M05	IC, REGULATOR	⚠
IC701	AN8802SCE1V	IC, HEAD AMP	
IC702	MN66271RA	IC, DIGITAL LSI	
IC703	AN8389SE1	IC, 4-CH DRIVER	

Ref. No.	Part No.	Part Name & Description	Remarks
IC900	M38197MA107	IC, MICON	[M]
IC951	DN6851ALB	IC, HALL	
IC971	DN6851ALB	IC, HALL	
		TRANSISTORS	
Q1	2SK544F-AC	TRANSISTOR	(E, EB)
Q2	2SC2786MTA	TRANSISTOR	(E, EB)
Q3	2SC2787FL1TA	TRANSISTOR	(E, EB)
Q4	2SC2787FL1TA	TRANSISTOR	(E, EB)
Q6	2SC2787LTA	TRANSISTOR	
Q7	RVTDTA143XST	TRANSISTOR	
Q8	2SC1740SSTA	TRANSISTOR	
Q9	2SC1740SSTA	TRANSISTOR	
Q10	2SC2785FETA	TRANSISTOR	
Q11	2SC2785FETA	TRANSISTOR	
Q12	2SC2787LTA	TRANSISTOR	
Q13	2SC1740SSTA	TRANSISTOR	
Q14	2SC1740SSTA	TRANSISTOR	
Q15	2SC1740SSTA	TRANSISTOR	
Q101	2SJ40CDTA	TRANSISTOR	
Q102	2SJ40CDTA	TRANSISTOR	
Q103	2SJ40CDTA	TRANSISTOR	
Q104	2SJ40CDTA	TRANSISTOR	
Q105	RVTDTC144TST	TRANSISTOR	
Q106	RVTDTC144TST	TRANSISTOR	
Q107	RVTDTC144TST	TRANSISTOR	
Q108	RVTDTC144TST	TRANSISTOR	
Q109	RVTDTC144TST	TRANSISTOR	
Q110	RVTDTC144TST	TRANSISTOR	
Q115	2SD1020HTA	TRANSISTOR	[M]
Q116	2SD1020HTA	TRANSISTOR	[M]
Q117	RVTDTC144EST	TRANSISTOR	
Q151	RVTDTC144TST	TRANSISTOR	
Q152	RVTDTC144TST	TRANSISTOR	
Q153	2SC1740SLNET	TRANSISTOR	
Q154	2SC1740SLNET	TRANSISTOR	
Q171	2SD1450STA	TRANSISTOR	
Q173	RVTDTC144TST	TRANSISTOR	
Q174	2SC1740SSTA	TRANSISTOR	
Q175	2SD1450STA	TRANSISTOR	
Q176	2SD1450STA	TRANSISTOR	
Q179	2SC2784FTA	TRANSISTOR	[M]
Q180	2SC2784FTA	TRANSISTOR	[M]
Q201	2SD965RTA	TRANSISTOR	
Q202	2SK301QTA	TRANSISTOR	[M]
Q203	2SD965RTA	TRANSISTOR	
Q204	2SK301QTA	TRANSISTOR	[M]
Q205	RVTDTC144TST	TRANSISTOR	

Ref. No.	Part No.	Part Name & Description	Remarks
Q206	2SB621RTA	TRANSISTOR	
Q207	2SB621RTA	TRANSISTOR	
Q208	RVTDTC114TST	TRANSISTOR	
Q209	RVTDTC114TST	TRANSISTOR	
Q218	RVTDTA114EST	TRANSISTOR	
Q219	RVTDTA143XST	TRANSISTOR	
Q220	RVTDTA143XST	TRANSISTOR	
Q305	2SK301QTA	TRANSISTOR	[M]
Q306	2SK301QTA	TRANSISTOR	[M]
Q307	2SC1740SSTA	TRANSISTOR	
Q308	2SC1740SSTA	TRANSISTOR	
Q309	2SD1020HTA	TRANSISTOR	[M]
Q310	2SD1020HTA	TRANSISTOR	[M]
Q311	RVTDTC124EST	TRANSISTOR	[M]
Q312	RVTDTA114EST	TRANSISTOR	
Q313	RVTDTA114EST	TRANSISTOR	
Q314	2SB621ARTA	TRANSISTOR	
Q315	RVTDTC124EST	TRANSISTOR	[M]
Q318	2SA933SSTA	TRANSISTOR	
Q501	2SC1740SSTA	TRANSISTOR	
Q502	2SD1762E	TRANSISTOR	[M]
Q503	2SB1185E	TRANSISTOR	
Q504	2SA933SSTA	TRANSISTOR	
Q505	2SD1762E	TRANSISTOR	[M]
Q506	2SB1185E	TRANSISTOR	
Q507	RVTDTC124EST	TRANSISTOR	[M]
Q516	2SD2037ETA	TRANSISTOR	[M]
Q550	2SC1740SSTA	TRANSISTOR	
Q551	2SC1740SSTA	TRANSISTOR	
Q552	2SC1740SSTA	TRANSISTOR	
Q553	2SD1762E	TRANSISTOR	[M]
Q554	2SA933SSTA	TRANSISTOR	
Q558	2SC2001KTA	TRANSISTOR	
Q701	2SB709S	TRANSISTOR	
Q900	2SC1740SSTA	TRANSISTOR	
Q902	2SC1740SSTA	TRANSISTOR	
Q903	2SC1740SSTA	TRANSISTOR	
Q904	2SC1740SSTA	TRANSISTOR	
Q905	RVTDTA114EST	TRANSISTOR	
Q906	2SC2001KTA	TRANSISTOR	
Q907	2SC2001KTA	TRANSISTOR	
		DIODES	
D1	SVC211SPA-AL	DIODE	(E, EB)
D2	SVC211SPA-AL	DIODE	(E, EB)
D3	SVC211SPA-AL	DIODE	(E, EB)
D4	MTZJ5R1CTA	DIODE	[M]
D5	RVD1SS133TA	DIODE	

Ref. No.	Part No.	Part Name & Description	Remarks
D171	RVD1SS133TA	DIODE	
D172	RVDMTZ4R7BTA	DIODE	
D173	RVD1SS133TA	DIODE	
D174	RVDMTZ3R6BTA	DIODE	[M]
D307	RVD1SS133TA	DIODE	
D308	RVD1SS133TA	DIODE	
D310	RVD1SS133TA	DIODE	
D311	RVD1SS133TA	DIODE	
D312	RVDMTZ7R5BTA	DIODE	
D501	1D3E	DIODE	[M] ⚠
D502	1D3E	DIODE	[M] ⚠
D503	1N5402BM21	DIODE	
D504	1N5402BM21	DIODE	
D505	1N5402BM21	DIODE	
D506	1N5402BM21	DIODE	
D507	RVDMTZ12BTA	DIODE	
D516	RVDMTZ15CTA	DIODE	[M]
D517	RVDMTZ15CTA	DIODE	[M]
D518	MTZJ8R2CTA	DIODE	⚠
D550	1D3E	DIODE	[M]
D551	1D3E	DIODE	[M]
D552	RVDMTZ10BTA	DIODE	⚠
D553	RVDMTZ10BTA	DIODE	⚠
D554	RVDMTZ10BTA	DIODE	⚠
D555	RVD1SS133TA	DIODE	
D556	RVD1SS133TA	DIODE	
D560	MTZJ6R2CTA	DIODE	
D561	MTZJ8R2CTA	DIODE	
D567	RVD1SS133TA	DIODE	
D568	RVD1SS133TA	DIODE	
D569	RVD1SS133TA	DIODE	
D570	RVD1SS133TA	DIODE	
D571	RVD1SS133TA	DIODE	
D572	RVD1SS133TA	DIODE	
D900	SLR38DCTD0	DIODE	[M]
D901	1SS291TA	DIODE	
D902	SLR38DCTD0	DIODE	[M]
D903	1SS291TA	DIODE	
D905	RVD1SS133TA	DIODE	
D907	RVD1SS133TA	DIODE	
D909	RVD1SS133TA	DIODE	
D910	RVD1SS133TA	DIODE	
D911	RVD1SS133TA	DIODE	
D912	RVD1SS133TA	DIODE	
D913	RVD1SS133TA	DIODE	
D914	RVD1SS133TA	DIODE	
D915	RVD1SS133TA	DIODE	
D916	RVDMTZ6R8BTA	DIODE	
D951	RVD1SS133TA	DIODE	

Ref. No.	Part No.	Part Name & Description	Remarks
D971	RVD1SS133TA	DIODE	
		VARIABLE RESISTORS	
VR101	RVNCC24B1T-A	VR, SEMIFIXED	
VR102	RVNCC24B1T-A	VR, SEMIFIXED	
VR103	RVNCC24B1T-A	VR, SEMIFIXED	
VR104	RVNCC24B1T-A	VR, SEMIFIXED	
VR201	RVNCC73B1T-A	VR, SEMIFIXED	
VR202	RVNCC24B1T-A	VR, SEMIFIXED	
VR203	RVNCC14B1T-A	VR, SEMIFIXED	
VR900	RRV16B24104B	VR, VOLUME	
		SWITCHES	
S701	RSM0006-P	SW, RESET	
S900	EVQ21405R	SW, DOLBY	
S901	EVQ21405R	SW, NORMAL SPEED	
S902	EVQ21405R	SW, HIGH SPEED	
S903	EVQ21405R	SW, REV. PLAY	
S904	EVQ21405R	SW, REW	
S905	EVQ21405R	SW, STOP	
S906	EVQ21405R	SW, FF	
S907	EVQ21405R	SW, FWD. PLAY	
S908	EVQ21405R	SW, PAUSE	
S909	EVQ21405R	SW, REV. MODE	
S910	EVQ21405R	SW, DECK 1/2	
S911	EVQ21405R	SW, DISC 3	
S912	EVQ21405R	SW, DISC 2	
S913	EVQ21405R	SW, DISC 1	
S914	EVQ21405R	SW, EASY EDIT	
S916	EVQ21405R	SW, RANDOM	
S917	EVQ21405R	SW, CD STOP	
S918	EVQ21405R	SW, CD PAUSE	
S919	EVQ21405R	SW, CD PLAY	
S920	EVQ21405R	SW, FF/SKIP	
S921	EVQ21405R	SW, REV/SKIP	
S922	EVQ21405R	SW, OPEN/CLOSE	
S923	EVQ21405R	SW, ON/FLAT	
S924	EVQ21405R	SW, HALL	
S925	EVQ21405R	SW, SOFT	
S926	EVQ21405R	SW, CLEAR	
S927	EVQ21405R	SW, HEAVY	
S928	EVQ21405R	SW, V. BASS	
S930	EVQ21405R	SW, POWER	
S931	EVQ21405R	SW, SURROUND	
S932	EVQ21405R	SW, MUTE	
S933	EVQ21405R	SW, FM MODE/BP	
S934	EVQ21405R	SW, AUX	

Ref. No.	Part No.	Part Name & Description	Remarks
S936	EVQ21405R	SW, TUNING MODE	
S937	EVQ21405R	SW, MEMORY/SET	
S938	EVQ21405R	SW, TUNING DOWN	
S939	EVQ21405R	SW, TUNING UP	
S941	EVQ21405R	SW, AM	
S942	EVQ21405R	SW, FM	
S943	EVQ21405R	SW, TIMER REC	
S944	EVQ21405R	SW, TIMER PLAY	
S945	EVQ21405R	SW, CLOCK/TIMER	
S951	RSH1A89ZD-U	SW, MODE DETECT (1)	
S952	RSH1A90YD-U	SW, TAPE DETECT (1)	
S953	RSH1A90YD-U	SW, CrO_2 DETECT (1)	
S971	RSH1A89ZD-U	SW, MODE DETECT (2)	
S972	RSH1A90YD-U	SW, TAPE DETECT (2)	
S973	RSH1A90YD-U	SW, TAB DETECT (2)	
S974	RSH1A90YD-U	SW, TAB DETECT (2)	
S975	RSH1A90YD-U	SW, CrO_2 DETECT (2)	
		CONNECTORS	
CN1	RJU063W07T	7P B-B CONNECTOR	
CN2	RJU063W07T	7P B-B CONNECTOR	
CN100	RJS10T4ZA	10P CONNECTOR	
CN200	RJS8T4ZA	8P CONNECTOR	
CN501	RJP9G4YA	9P CONNECTOR	
CN502	RJU005A012	12P CONNECTOR	
CN503	RJU005A012	12P CONNECTOR	
CN504	RJS1A5206	6P CONNECTOR	[M]
CN603	RJU077K20	20P B-B CONNECTOR	[M]
CN604	RJU077K20	20P B-B CONNECTOR	[M]
CN701	RJU035T016-1	16-PIN FFC CONNECTOR	
CN702	RJS1A6723-1Q	23 PIN FFC CONNCETOR	
CN803	RJS1A6214-1	14P FFC CONNECTOR	
CN902	RJS1A6223-1	23P FFC CONNECTOR	
CP1	RJT063W07T	7P CONNECTOR	
CP2	RJT063W07T	7P CONNECTOR	
CP101	RJP5G18ZA	5P CONNECTOR	
CP102	RJP4G18ZA	4P CONNECTOR	
CP103	RJP3G1ZA	3P CONNECTOR	
CP502	RJT005W012	12P CONNECTOR	
CP503	RJT005W012	12P CONNECTOR	
CP603	RJT077K20	20P B-B CONNECTOR	[M]
CP604	RJT077K20	20P B-B CONNECTOR	[M]
		COILS & TRANSFORMERS	
L1	RLQZP1R2KT-Y	AXIAL COIL	(E, EB)
L2	RLQZPR47KT-Y	AXIAL COIL	(E, EB)
L3	RLQZPR47KT-Y	AXIAL COIL	

Ref. No.	Part No.	Part Name & Description	Remarks
L4	ELEPKR68MA	INDUCTOR	
L5	ELEPKR68MA	INDUCTOR	
L6	ELELN822KL	RF CHOCK COIL	
L7	ELELN822KL	RF CHOCK COIL	
L8	RLQZP1R0KT-Y	AXIAL COIL	
L9	SLM1B10-1M	A.B. FILTER	(EG)
L201	RL08C002M-T	BIAS OSC COIL	
L202	RLQZB470KT-D	RF CHOKE COIL	
L500	SLQZ650MH49	AC LINE COIL	(EG)⚠
L501	SLQY07G-40	SP COIL	
L502	SLQY07G-40	SP COIL	
L900	RLQZP3R3KT-Y	AXIAL COIL	
L901	RLQZP2R2KT-Y	AXIAL COIL	
T501	RTP2M3B001	POWER TRANSFORMER	[M] ⚠
		COMPONENT COMBINATION	
Z1	RLA6Z005M-T	AM ANT/OSC	
Z2	RLI2Z006M-T	AM IFT	
Z3	ENV17290G1R	FM TUNER PACK	(EG)
Z101	EXBF6L306SYV	BLOCK RESISTOR	
Z102	EXBF6L306SYV	BLOCK RESISTOR	
Z103	EXBF6L306SYV	BLOCK RESISTOR	
Z900	RCDHC-278N	SENSOR	
		CERAMIC FILTERS	
CF1	RLFFETNGA01L	FM CF	(EG)
CF1	RLFFETWNA01L	FM CF	(E, EB)
CF2	RLFFETNGA02L	FM CF	(EG)
CF2	RLFFETWNA01L	FM CF	(E, EB)
		OSCILLATORS	
X1	RSXZ456KM01	19KHZ OSC	
X2	RLFDFT12DD	FM RESONATOR	
X3	SVQ49U722T-S	7.2MHZ X'TAL	
X701	RSXZ16M9M02T	CERAMIC OSC	
X900	RSXD32K7S02	32.768HKZ X'TAL	[M]
X901	EF0EN6004T4	CERAMIC OSC	[M]
		DISPLAY TUBE	
FL900	RSL0192-F	FL	[M]
		EARTH TERMINALS	
E500	SNE1004-2	EARTH PLATE	

Ref. No.	Part No.	Part Name & Description	Remarks
		RELAYS	
RLY501	RSY0023M-0	RELAY	[M] ⚠
		FUSES	
F1	XBA2C10TB0	FUSE	⚠
		FUSE CLIPS	
FC1	SJT388	FUSE CLIP	
FC2	SJT388	FUSE CLIP	
		JACKS	
JK1	RJH8201	JK, ANTENNA TERMINAL	[M]
JK2	SJS208	JK, LOOP ANT. TERMINAL	
JK301	RJH3209N	JK, RCA	[M]
JK500	SJS9236	JK, AC INLET	⚠
JK501	RJR0054	JK, SP TERMINAL	
JK881	RJJ37TK01-C	JK, HP	
		<LOADING MOTOR>	
		INTEGRATED CIRCUITS	
IC501	BA6218	IC, MOTOR DRIVER	
		TRANSISTORS	
Q501	RVTDTC143EST	TRANSISTOR	
Q502	RVTDTC143EST	TRANSISTOR	
		DIODES	
D501	MA165TA	DIODE	
D502	RSQGP1S53V	PHOTO INTERRUPTOR	
D503	PT381TB	PHOTO TRANSISTOR	
D504	GL380TB	LED	
		SWITCHES	
S501	RSH2A001-3	SW, UP/DOWN	[M]
S502	RSH1A005	SW, FULL OPEN	
S503	RSH1A005	SW, HALF OPEN	
		CONNECTORS	
CN501	RJS1A6714-Q	14 PIN CONNECTOR	[M]

Resistors & Capacitors

Notes:
- Important safety notice:
  Components identified by ⚠ mark have special characteristics important for safety.
  Furthermore, special parts which have purposes of fire-retardant (resistors), high-quality sound (capacitors), low noise (resistors), etc are used.
  When replacing any of these components, be sure to use only manufacturer's specified parts shown in the parts list .
- Capacitor values are in microfarads (μF) unless specified otherwise, P=Pico-farads (pF), F=Farads.
- Resistance values are in ohms, unless specified otherwise, 1K=1,000 (OHM).
- The parenthesized indications in the Values & Remarks column specify the area (Refer to the cover page for area). Parts without these indications can be used for all areas.
- [M] Indicates in the Values & Remarks column indicates parts supplied by **MESA**

Ref. No.	Part No.	Values & Remarks
	RESISTORS	
R1	ERDS2TJ104T	100K 1/4W (E,EB)
R2	ERDS2TJ104T	100K 1/4W (E,EB)
R3	ERDS2TJ221T	220 1/4W (E,EB)
R4	ERDS2TJ104T	100K 1/4W (E,EB)
R5	ERDS2TJ564T	560K 1/4W (E,EB)
R6	ERDS2TJ391T	390 1/4W (E,EB)
R7	ERDS2TJ272T	2.7K 1/4W (E,EB)
R8	ERDS2TJ684T	680K 1/4W (E,EB)
R9	ERDS2TJ391T	390 1/4W (E,EB)
R10	ERDS2TJ391T	390 1/4W (E,EB)
R11	ERDS2TJ684T	680K 1/4W (E,EB)
R15	ERDS2TJ181T	180 1/4W
R16	ERDS2TJ153T	15K 1/4W (EG)
R16	ERDS2TJ822T	8.2K 1/4W (E,EB)
R17	ERDS2TJ331T	330 1/4W
R18	ERDS2TJ471T	470 1/4W
R19	ERDS2TJ474T	470K 1/4W
R20	ERDS2TJ562T	5.6K 1/4W
R21	ERDS2TJ822T	8.2K 1/4W
R22	ERDS2TJ473T	47K 1/4W
R23	ERDS2TJ332T	3.3K 1/4W
R24	ERDS2TJ472T	4.7K 1/4W
R25	ERDS2TJ271T	270 1/4W
R26	ERDS2TJ471T	470 1/4W
R27	ERDS2TJ272T	2.7K 1/4W
R28	ERDS2TJ473T	47K 1/4W
R29	ERDS2TJ680T	68 1/4W
R32	ERDS2TJ272T	2.7K 1/4W
R33	ERDS2TJ272T	2.7K 1/4W
R34	ERDS2TJ103T	10K 1/4W
R35	ERDS2TJ103T	10K 1/4W
R36	ERDS2TJ474T	470K 1/4W
R37	ERDS2TJ474T	470K 1/4W
R38	ERDS2TJ272T	2.7K 1/4W
R39	ERDS2TJ272T	2.7K 1/4W
R40	ERDS2TJ391T	390 1/4W
R41	ERDS2TJ102T	1K 1/4W
R42	ERDS2TJ102T	1K 1/4W
R43	ERDS2TJ102T	1K 1/4W
R44	ERDS2TJ102T	1K 1/4W
R45	ERDS2TJ102T	1K 1/4W
R46	ERDS2TJ104T	100K 1/4W
R47	ERDS2TJ562T	5.6K 1/4W
R48	ERDS2TJ391T	390 1/4W
R49	ERDS2TJ561T	560 1/4W
R50	ERDS2TJ102T	1K 1/4W
R51	ERDS2TJ103T	10K 1/4W
R52	ERDS2TJ102T	1K 1/4W
R53	ERDS2TJ102T	1K 1/4W
R54	ERDS2TJ102T	1K 1/4W
R55	ERDS2TJ102T	1K 1/4W
R56	ERDS2TJ102T	1K 1/4W
R57	ERDS2TJ103T	10K 1/4W
R58	ERDS2TJ103T	10K 1/4W
R60	ERDS2TJ563T	56K 1/4W
R61	ERDS2TJ102T	1K 1/4W
R63	ERDS2TJ102T	1K 1/4W
R64	ERDS2TJ820T	82 1/4W
R65	ERDS2TJ103T	10K 1/4W
R71	ERDS2TJ182T	1.8K 1/4W
R72	ERDS2TJ122T	1.2K 1/4W
R73	ERDS2TJ122T	1.2K 1/4W
R74	ERDS2TJ103T	10K 1/4W
R75	ERDS2TJ222T	2.2K 1/4W
R76	ERDS2TJ331T	330 1/4W
R77	ERDS2TJ474T	470K 1/4W
R101	ERD25TJ334T	330K 1/4W
R102	ERDS2TJ104T	100K 1/4W
R103	ERDS2TJ153T	15K 1/4W
R104	ERDS2TJ153T	15K 1/4W
R105	ERDS2TJ271T	270 1/4W
R106	ERD25TJ222T	2.2K 1/4W
R107	ERDS2TJ330T	33 1/4W
R108	ERDS2TJ330T	33 1/4W
R109	ERDS2TJ392T	3.9K 1/4W
R110	ERDS2TJ392T	3.9K 1/4W
R111	ERDS2TJ222T	2.2K 1/4W
R112	ERDS2TJ222T	2.2K 1/4W
R113	ERDS2TJ182T	1.8K 1/4W
R114	ERDS2TJ182T	1.8K 1/4W
R115	ERDS2TJ225T	2.2M 1/4W
R116	ERDS2TJ225T	2.2M 1/4W
R117	ERDS2TJ105T	1M 1/4W
R118	ERDS2TJ105T	1M 1/4W
R121	ERDS2TJ124T	120K 1/4W
R122	ERDS2TJ124T	120K 1/4W
R123	ERDS2TJ473T	47K 1/4W
R124	ERDS2TJ473T	47K 1/4W
R125	ERDS2TJ472T	4.7K 1/4W
R126	ERDS2TJ472T	4.7K 1/4W
R127	ERDS2TJ392T	3.9K 1/4W
R128	ERDS2TJ392T	3.9K 1/4W
R131	ERDS2TJ823T	82K 1/4W
R132	ERDS2TJ335T	3.3M 1/4W
R133	ERDS2TJ332T	3.3K 1/4W
R134	ERDS2TJ474T	470K 1/4W
R137	ERD25TJ103T	10K 1/4W
R138	ERD25TJ103T	10K 1/4W
R139	ERDS2TJ103T	10K 1/4W
R141	ERDS2TJ682T	6.8K 1/4W
R142	ERDS2TJ682T	6.8K 1/4W
R145	ERDS2TJ103T	10K 1/4W
R146	ERDS2TJ103T	10K 1/4W
R149	ERDS2TJ272T	2.7K 1/4W
R150	ERDS2TJ272T	2.7K 1/4W
R151	ERDS2TJ105T	1M 1/4W
R152	ERDS2TJ105T	1M 1/4W
R153	ERDS2TJ102T	1K 1/4W
R154	ERDS2TJ102T	1K 1/4W
R155	ERDS2TJ681T	680 1/4W
R156	ERDS2TJ681T	680 1/4W
R158	ERDS2TJ221T	220 1/4W
R159	ERDS2TJ222T	2.2K 1/4W
R160	ERDS2TJ222T	2.2K 1/4W

Ref. No.	Part No.	Values & Remarks
R161	ERDS2TJ472T	4.7K 1/4W
R162	ERDS2TJ472T	4.7K 1/4W
R163	ERDS2TJ433T	43K 1/4W
R169	ERDS2TJ102T	1K 1/4W
R170	ERDS2TJ102T	1K 1/4W
R172	ERDS2TJ331T	330 1/4W
R173	ERDS2TJ103T	10K 1/4W
R174	ERDS2TJ103T	10K 1/4W
R176	ERDS2TJ103T	10K 1/4W
R177	ERDS2TJ682T	6.8K 1/4W
R178	ERDS2TJ1R2T	1.2 1/4W
R179	ERDS2TJ472T	4.7K 1/4W
R180	ERDS2TJ472T	4.7K 1/4W
R181	ERD25TJ332T	3.3K 1/4W
R182	ERDS2TJ1R0T	1 1/4W
R183	ERDS2TJ104T	100K 1/4W
R184	ERDS2TJ104T	100K 1/4W
R185	ERDS2TJ104T	100K 1/4W
R186	ERDS2TJ102T	1K 1/4W
R188	ERDS2TJ102T	1K 1/4W
R189	ERDS2TJ472T	4.7K 1/4W
R200	ERDS2TJ102T	1K 1/4W
R201	ERDS2TJ2R7T	2.7 1/4W
R202	ERDS2TJ562T	5.6K 1/4W
R203	ERDS2TJ153T	15K 1/4W
R204	ERDS2TJ123T	12K 1/4W
R205	ERDS2TJ334T	330K 1/4W
R206	ERDS2TJ102T	1K 1/4W
R207	ERDS2TJ2R7T	2.7 1/4W
R208	ERDS2TJ123T	12K 1/4W
R209	ERDS2TJ123T	12K 1/4W
R210	ERDS2TJ272T	2.7K 1/4W
R211	ERDS2TJ334T	330K 1/4W
R212	ERDS2TJ123T	12K 1/4W
R213	ERDS2TJ152T	1.5K 1/4W
R220	ERDS2TJ472T	4.7K 1/4W
R221	ERDS2TJ2R7T	2.7 1/4W
R225	ERDS2TJ2R7T	2.7 1/4W
R226	ERDS2TJ102T	1K 1/4W
R227	ERDS2TJ102T	1K 1/4W
R228	ERDS2TJ472T	4.7K 1/4W
R229	ERDS2TJ103T	10K 1/4W
R230	ERDS2TJ472T	4.7K 1/4W
R231	ERDS2TJ472T	4.7K 1/4W
R232	ERDS2TJ222T	2.2K 1/4W
R233	ERD25TJ222T	2.2K 1/4W
R234	ERDS2TJ472T	4.7K 1/4W
R235	ERDS2TJ104T	100K 1/4W
R236	ERDS2TJ104T	100K 1/4W

Ref. No.	Part No.	Values & Remarks
R301	ERDS2TJ223T	22K 1/4W
R302	ERDS2TJ223T	22K 1/4W
R303	ERDS2TJ822T	8.2K 1/4W
R304	ERDS2TJ822T	8.2K 1/4W
R305	ERDS2TJ222T	2.2K 1/4W
R306	ERDS2TJ222T	2.2K 1/4W
R307	ERDS2TJ332T	3.3K 1/4W
R308	ERDS2TJ332T	3.3K 1/4W
R309	ERDS2TJ222T	2.2K 1/4W
R310	ERDS2TJ222T	2.2K 1/4W
R311	ERDS2TJ332T	3.3K 1/4W
R312	ERDS2TJ332T	3.3K 1/4W
R319	ERDS2TJ103T	10K 1/4W
R320	ERDS2TJ222T	2.2K 1/4W
R323	ERDS2TJ272T	2.7K 1/4W
R331	ERDS2TJ222T	2.2K 1/4W
R333	ERDS2TJ103T	10K 1/4W
R334	ERDS2TJ152T	1.5K 1/4W
R335	ERD2FCVG470T	47 1/4W
R336	ERDS2TJ102T	1K 1/4W
R337	ERDS2TJ103T	10K 1/4W
R338	ERDS2TJ103T	10K 1/4W
R339	ERDS2TJ473T	47K 1/4W
R340	ERDS2TJ103T	10K 1/4W
R341	ERDS2TJ103T	10K 1/4W
R342	ERDS2TJ222T	2.2K 1/4W
R343	ERDS2TJ222T	2.2K 1/4W
R344	ERDS2TJ222T	2.2K 1/4W
R345	ERDS2TJ562T	5.6K 1/4W
R346	ERDS2TJ562T	5.6K 1/4W
R347	ERDS2TJ473T	47K 1/4W
R348	ERDS2TJ103T	10K 1/4W
R351	ERDS2TJ472T	4.7K 1/4W
R352	ERDS2TJ472T	4.7K 1/4W
R353	ERDS2TJ471T	470 1/4W
R354	ERDS2TJ471T	470 1/4W
R361	ERDS2TJ103T	10K 1/4W
R363	ERDS2TJ391T	390 1/4W
R365	ERDS2TJ473T	47K 1/4W
R366	ERDS2TJ473T	47K 1/4W
R367	ERDS2TJ822T	8.2K 1/4W
R368	ERDS2TJ822T	8.2K 1/4W
R369	ERDS2TJ823T	82K 1/4W
R370	ERDS2TJ823T	82K 1/4W
R377	ERDS2TJ472T	4.7K 1/4W
R378	ERDS2TJ472T	4.7K 1/4W
R379	ERDS2TJ182T	1.8K 1/4W
R380	ERDS2TJ182T	1.8K 1/4W
R381	ERDS2TJ152T	1.5K 1/4W

Ref. No.	Part No.	Values & Remarks
R382	ERDS2TJ152T	1.5K 1/4W
R383	ERDS2TJ105T	1M 1/4W
R385	ERDS2TJ474T	470K 1/4W
R386	ERDS2TJ331T	330 1/4W
R387	ERDS2TJ222T	2.2K 1/4W
R388	ERDS2TJ222T	2.2K 1/4W
R389	ERDS2TJ104T	100K 1/4W
R390	ERDS2TJ104T	100K 1/4W
R392	ERDS2TJ334T	330K 1/4W
R393	ERDS2TJ392T	3.9K 1/4W
R394	ERDS2TJ105T	1M 1/4W
R395	ERD25FVJ6R8T	6.8 1/4W
R396	ERDS2TJ821T	820 1/4W
R397	ERDS2TJ153T	15K 1/4W
R400	ERDS2TJ272T	2.7K 1/4W
R405	ERDS2TJ104T	100K 1/4W
R406	ERDS2TJ104T	100K 1/4W
R501	ERDS2TJ102T	1K 1/4W
R502	ERDS2TJ102T	1K 1/4W
R503	ERDS2TJ683T	68K 1/4W
R504	ERDS2TJ683T	68K 1/4W
R505	ERDS2TJ682T	6.8K 1/4W
R506	ERDS2TJ682T	6.8K 1/4W
R507	ERDS2TJ683T	68K 1/4W
R508	ERDS2TJ683T	68K 1/4W
R509	ERDS1FVJ100T	10 1/2W ⚠
R510	ERDS1FVJ100T	10 1/2W ⚠
R511	ERDS2TJ124T	120K 1/4W
R512	ERDS2TJ823T	82K 1/4W
R513	ERDS2TJ334T	330K 1/4W
R514	ERDS2TJ563T	56K 1/4W
R515	ERDS2TJ103T	10K 1/4W
R516	ERD2FCVG470T	47 1/4W
R518	ERDS1FVJ390T	39 1/2W ⚠
R519	ERDS1FVJ390T	39 1/2W ⚠
R521	ERDS1FVJ152T	1.5K 1/2W ⚠
R522	ERDS1FVJ4R7T	4.7 1/2W ⚠
R523	ERDS1FVJ4R7T	4.7 1/2W ⚠
R524	ERDS1FVJ4R7T	4.7 1/2W ⚠
R525	ERDS2TJ151T	150 1/4W
R526	ERDS1FVJ152T	1.5K 1/2W ⚠
R527	ERDS1FVJ470T	47 1/2W ⚠
R528	ERD2FCVG220T	22 1/4W
R530	ERDS1FVJ681T	680 1/2W ⚠
R531	ERDS2TJ151T	150 1/4W
R532	ERDS2TJ331T	330 1/4W
R533	ERDS2TJ472T	4.7K 1/4W
R534	ERDS2TJ562T	5.6K 1/4W
R536	ERDS1FVJ820T	82 1/2W ⚠

Ref. No.	Part No.	Values & Remarks
R537	ERDS2TJ151T	150 1/4W
R538	ERDS1FVJ390T	39 1/2W ⚠
R539	ERDS1FVJ390T	39 1/2W ⚠
R540	ERDS2TJ100T	10 1/4W
R541	ERDS2TJ100T	10 1/4W
R542	ERDS2TJ222T	2.2K 1/4W
R543	ERDS2TJ223T	22K 1/4W
R544	ERDS2TJ151T	150 1/4W
R545	ERQ16NKWR10E	0.1 1/6W ⚠
R547	ERQ16NKWR10E	0.1 1/6W ⚠
R550	ERDS1FVJ221T	220 1/2W ⚠
R551	ERDS1FVJ820T	82 1/2W ⚠
R553	ERDS2TJ472T	4.7K 1/4W
R554	ERDS2TJ473T	47K 1/4W
R555	ERDS2TJ183T	18K 1/4W
R556	ERDS2TJ102T	1K 1/4W
R557	ERDS2TJ153T	15K 1/4W
R558	ERDS1FVJ102T	1K 1/2W ⚠
R559	ERDS2TJ180T	18 1/4W
R560	ERDS2TJ471T	470 1/4W
R561	ERDS2TJ151T	150 1/4W
R562	ERDS2TJ563T	56K 1/4W
R563	ERDS2TJ102T	1K 1/4W
R564	ERDS2TJ151T	150 1/4W
R565	ERD2FCVG120T	12 1/4W ⚠
R566	ERDS1FVJ8R2T	8.2 1/2W ⚠
R567	ERDS1FVJ8R2T	8.2 1/2W ⚠
R568	ERDS2TJ153T	15K 1/4W
R569	ERDS1FVJ1R0T	1 1/2W ⚠
R585	ERDS2TJ180T	18 1/4W
R586	ERDS2TJ180T	18 1/4W
R701	ERJ6GEYJ100V	10 1/10W
R702	ERJ6GEYJ471V	470 1/10W
R703	ERJ6GEYJ823V	82K 1/10W
R704	ERJ6GEYJ102V	1K 1/10W
R705	ERJ6GEYJ103V	10K 1/10W
R706	ERJ6GEYJ102V	1K 1/10W
R707	ERJ6GEYJ473V	47K 1/10W
R708	ERJ6GEYJ104V	100K 1/10W
R709	ERJ6GEYJ683V	68K 1/10W
R711	ERJ6GEYJ154V	150K 1/10W
R712	ERJ6GEYJ221V	220 1/10W
R717	ERJ6GEYJ102V	1K 1/10W
R718	ERJ6GEYJ102V	1K 1/10W
R719	ERJ6GEYJ102V	1K 1/10W
R720	ERJ6GEYJ102V	1K 1/10W
R721	ERJ6GEYJ101V	100 1/10W
R722	ERJ6GEYJ563V	56K 1/10W
R723	ERJ6GEYJ182V	1.8K 1/10W

Ref. No.	Part No.	Values & Remarks
R724	ERJ6GEYJ333V	33K 1/10W
R725	ERJ6GEYJ472V	4.7K 1/10W
R726	ERJ6GEYJ473V	47K 1/10W
R727	ERJ6GEYJ103V	10K 1/10W
R728	ERJ6GEYJ392V	3.9K 1/10W
R730	ERJ6GEYJ331V	330 1/10W
R731	ERJ6GEYJ392V	3.9K 1/10W
R734	ERJ6GEYJ101V	100 1/10W
R735	ERJ6GEYJ101V	100 1/10W
R736	ERJ6GEYJ101V	100 1/10W
R738	ERJ6GEYJ223V	22K 1/10W
R739	ERJ6GEYJ681V	680 1/10W
R741	ERJ6GEYJ562V	5.6K 1/10W
R742	ERJ6GEYJ562V	5.6K 1/10W
R743	ERJ6GEYJ562V	5.6K 1/10W
R744	ERJ6GEYJ103V	10K 1/10W
R745	ERJ6GEYJ155V	1.5M 1/10W
R748	ERJ6GEYJ182V	1.8K 1/10W
R749	ERJ8GEYJ103V	10K 1/8W
R817	ERDS2TJ104T	100K 1/4W
R818	ERDS2TJ104T	100K 1/4W
R819	ERDS2TJ104T	100K 1/4W
R820	ERDS2TJ223T	22K 1/4W
R821	ERDS2TJ223T	22K 1/4W
R865	ERDS2TJ472T	4.7K 1/4W
R867	ERDS2TJ472T	4.7K 1/4W
R868	ERDS2TJ472T	4.7K 1/4W
R869	ERDS2TJ472T	4.7K 1/4W
R870	ERDS2TJ472T	4.7K 1/4W
R871	ERDS2TJ472T	4.7K 1/4W
R872	ERDS2TJ472T	4.7K 1/4W
R881	ERDS2TJ820T	82 1/4W
R882	ERDS2TJ820T	82 1/4W
R883	ERDS2TJ820T	82 1/4W
R884	ERDS2TJ820T	82 1/4W
R885	ERDS2TJ820T	82 1/4W
R886	ERDS2TJ820T	82 1/4W
R887	ERDS2TJ222T	2.2K 1/4W
R888	ERDS2TJ222T	2.2K 1/4W
R889	ERDS2TJ222T	2.2K 1/4W
R890	ERDS2TJ222T	2.2K 1/4W
R891	ERDS2TJ272T	2.7K 1/4W
R892	ERDS2TJ272T	2.7K 1/4W
R894	ERDS2TJ820T	82 1/4W
R895	ERDS2TJ820T	82 1/4W
R899	ERDS2TJ273T	27K 1/4W
R900	ERDS2TJ223T	22K 1/4W
R901	ERDS2TJ103T	10K 1/4W
R902	ERDS2TJ682T	6.8K 1/4W

Ref. No.	Part No.	Values & Remarks
R903	ERDS2TJ472T	4.7K 1/4W
R904	ERDS2TJ272T	2.7K 1/4W
R905	ERDS2TJ222T	2.2K 1/4W
R906	ERDS2TJ182T	1.8K 1/4W
R907	ERDS2TJ122T	1.2K 1/4W
R908	ERDS2TJ102T	1K 1/4W
R909	ERDS2TJ102T	1K 1/4W
R910	ERDS2TJ683T	68K 1/4W
R911	ERDS2TJ223T	22K 1/4W
R912	ERDS2TJ103T	10K 1/4W
R913	ERDS2TJ682T	6.8K 1/4W
R914	ERDS2TJ472T	4.7K 1/4W
R915	ERDS2TJ272T	2.7K 1/4W
R916	ERDS2TJ222T	2.2K 1/4W
R917	ERDS2TJ182T	1.8K 1/4W
R918	ERDS2TJ122T	1.2K 1/4W
R919	ERDS2TJ102T	1K 1/4W
R920	ERDS2TJ102T	1K 1/4W
R921	ERDS2TJ472T	4.7K 1/4W
R922	ERDS2TJ272T	2.7K 1/4W
R923	ERDS2TJ222T	2.2K 1/4W
R924	ERDS2TJ182T	1.8K 1/4W
R925	ERDS2TJ122T	1.2K 1/4W
R926	ERDS2TJ102T	1K 1/4W
R927	ERDS2TJ102T	1K 1/4W
R928	ERDS2TJ682T	6.8K 1/4W
R929	ERDS2TJ103T	10K 1/4W
R930	ERDS2TJ222T	2.2K 1/4W
R931	ERDS2TJ182T	1.8K 1/4W
R932	ERDS2TJ122T	1.2K 1/4W
R933	ERDS2TJ102T	1K 1/4W
R934	ERDS2TJ102T	1K 1/4W
R935	ERDS2TJ472T	4.7K 1/4W
R936	ERDS2TJ682T	6.8K 1/4W
R937	ERDS2TJ103T	10K 1/4W
R938	ERDS2TJ223T	22K 1/4W
R939	ERDS2TJ683T	68K 1/4W
R941	ERDS2TJ103T	10K 1/4W
R943	ERDS2TJ271T	270 1/4W
R945	ERDS2TJ122T	1.2K 1/4W
R946	ERDS2TJ102T	1K 1/4W
R947	ERDS2TJ473T	47K 1/4W
R948	ERDS2TJ473T	47K 1/4W
R949	ERDS2TJ104T	100K 1/4W
R950	ERDS2TJ181T	180 1/4W
R951	ERDS2TJ332T	3.3K 1/4W
R952	ERDS2TJ331T	330 1/4W
R953	ERDS2TJ223T	22K 1/4W
R954	ERDS2TJ223T	22K 1/4W

Ref. No.	Part No.	Values & Remarks
R955	ERDS2TJ102T	1K 1/4W
R956	ERDS2TJ102T	1K 1/4W
R957	ERDS2TJ102T	1K 1/4W
R958	ERDS2TJ102T	1K 1/4W
R959	ERDS2TJ102T	1K 1/4W
R960	ERDS2TJ102T	1K 1/4W
R961	ERDS2TJ223T	22K 1/4W
R962	ERDS2TJ223T	22K 1/4W
R963	ERDS2TJ223T	22K 1/4W
R964	ERDS2TJ223T	22K 1/4W
R965	ERDS2TJ103T	10K 1/4W
R966	ERDS2TJ103T	10K 1/4W
R967	ERDS2TJ101T	100 1/4W
R968	ERDS2TJ101T	100 1/4W
R969	ERDS2TJ101T	100 1/4W
R970	ERDS2TJ101T	100 1/4W
R971	ERDS2TJ103T	10K 1/4W
R972	ERDS2TJ103T	10K 1/4W
R974	ERDS2TJ103T	10K 1/4W
R975	ERDS2TJ472T	4.7K 1/4W
R976	ERDS2TJ561T	560 1/4W
R977	ERDS2TJ104T	100K 1/4W
R978	ERDS2TJ104T	100K 1/4W
R979	ERDS2TJ102T	1K 1/4W
R980	ERDS2TJ102T	1K 1/4W
R981	ERDS2TJ102T	1K 1/4W
R982	ERDS2TJ103T	10K 1/4W
R983	ERDS2TJ102T	1K 1/4W
R984	ERDS2TJ102T	1K 1/4W
R985	ERDS2TJ102T	1K 1/4W
R986	ERDS2TJ473T	47K 1/4W
R987	ERDS2TJ106T	10M 1/4W
R988	ERDS2TJ334T	330K 1/4W
R989	ERDS2TJ681T	680 1/4W
R990	ERDS2TJ472T	4.7K 1/4W
R991	ERDS2TJ472T	4.7K 1/4W
R992	ERDS2TJ101T	100 1/4W
R993	ERDS2TJ101T	100 1/4W
R994	ERDS2TJ103T	10K 1/4W
R996	ERDS2TJ272T	2.7K 1/4W
R997	ERDS2TJ223T	22K 1/4W
R999	ERDS2TJ472T	4.7K 1/4W
	CAPACITORS	
C1	ECBT1H5R6KC5	5.6P 50V (E,EB)
C2	RCBS1H102KBY	1000P 50V (E,EB)
C3	ECBT1H2R2KC5	2.2P 50V (E,EB)
C4	ECBT1H181KB5	180P 50V (E,EB)

Ref. No.	Part No.	Values & Remarks
C5	ECBT1H5R6KC5	5.6P 50V (E,EB)
C6	ECBT1H3R3KC5	3.3P 50V (E,EB)
C7	ECBT1H4R7KC5	4.7P 50V (E,EB)
C8	ECBT1H3R3KC5	3.3P 50V (E,EB)
C9	ECBT1H2R2KC5	2.2P 50V (E,EB)
C10	ECBT1H180JC5	18P 50V (E,EB)
C11	RCBS1H102KBY	1000P 50V (E,EB)
C15	ECBT1C103MS5	0.01 16V
C16	ECEA1CU220B	22 16V
C17	ECBT1C103MS5	0.01 16V
C18	ECBT1H102KB5	1000P 50V
C19	ECBT1C103MS5	0.01 16V
C20	ECEA1HKA3R3B	3.3 50V
C21	ECEA0JU101B	100 6.3V
C22	ECBT1C103MS5	0.01 16V
C23	ECEA1CU220B	22 16V
C24	ECBT1H473ZF5	0.047 50V
C25	ECEA1HKA4R7B	4.7 50V
C26	ECBT1C822MS5	8200P 16V
C27	ECQP1821JZT	820P 100V [M]
C28	ECEA1HKA010B	1 50V
C29	ECFR1C103KR	0.01 16V
C30	ECFR1C103KR	0.01 16V
C31	ECBT1H150JC5	15P 50V
C32	ECBT1C103MS5	0.01 16V
C33	ECEA1HKA2R2B	2.2 50V
C34	ECEA1HKA010B	1 50V
C35	ECEA1HKA010B	1 50V
C36	ECEA1HKA010B	1 50V
C37	ECEA1HKA010B	1 50V
C38	ECBT1C822MS5	8200P 16V
C39	ECBT1C822MS5	8200P 16V
C40	ECBT1H561KB5	560P 50V
C41	ECBT1H561KB5	560P 50V
C42	ECBT1C562MR5	5600P 16V
C43	ECBT1C562MR5	5600P 16V
C44	ECEA1CU101B	100 16V
C45	ECEA1HKA010B	1 50V
C46	ECEA1HKA010B	1 50V
C47	ECBT1H473ZF5	0.047 50V
C48	ECBT1H100JC5	10P 50V
C49	ECBT1H331KB5	330P 50V
C51	ECBT1C103MS5	0.01 16V
C52	ECEA25M4R7RB	4.7 25V
C53	ECBT1C103MS5	0.01 16V
C54	ECBT1H180JC5	18P 50V
C55	ECBT1H150JC5	15P 50V
C56	ECBT1H102KB5	1000P 50V
C57	ECEA0JU101B	100 6.3V

Ref. No.	Part No.	Values & Remarks
C59	ECBT1H330J5	33P 50V
C60	ECBT1H102KB5	1000P 50V
C61	ECBT1H331KB5	330P 50V
C62	ECEA1CU220B	22 16V
C63	ECBT1C103MS5	0.01 16V
C64	ECBT1C103MS5	0.01 16V
C65	ECBT1H102KB5	1000P 50V
C66	ECBT1H102KB5	1000P 50V
C67	ECBT1H102KB5	1000P 50V
C68	ECBT1H102KB5	1000P 50V
C71	ECBT1C103MS5	0.01 16V (EG)
C71	ECBT1H331KB5	330P 50V (E,EB)
C72	ECBT1H471KB5	470P 50V (EG)
C73	ECBT1H2R7KC5	2.7P 50V (EG)
C101	ECBT1H102KB5	1000P 50V
C102	ECBT1H102KB5	1000P 50V
C104	ECFR1C223MR	0.022 16V
C105	ECBT1H471KB5	470P 50V
C106	ECBT1H471KB5	470P 50V
C108	ECEA1AU330B	33 10V
C109	ECEA1AU101B	100 10V
C110	ECFR1E104ZF5	0.1 25V
C111	ECBT1H331KB5	330P 50V
C112	ECBT1H331KB5	330P 50V
C113	ECEA0JU221B	220 6.3V
C114	ECEA0JU221B	220 6.3V
C115	ECFR1C333JR	0.033 16V
C116	ECFR1C333JR	0.033 16V
C117	ECEA1HKA010B	1 50V
C118	ECEA1HKA010B	1 50V
C119	ECEA1EU4R7B	4.7 25V
C120	ECEA1EU4R7B	4.7 25V
C121	ECEA1HKA010B	1 50V
C122	ECEA1HKA010B	1 50V
C123	ECBT1H102KB5	1000P 50V
C124	ECBT1H102KB5	1000P 50V
C125	ECFR1C473MR	0.047 16V
C126	ECFR1C473MR	0.047 16V
C127	ECBT1C332MR5	3300P 16V
C128	ECBT1C332MR5	3300P 16V
C129	ECBT1H151KB5	150P 50V
C130	ECBT1H151KB5	150P 50V
C131	ECBT1H221KB5	220P 50V
C132	ECBT1H221KB5	220P 50V
C133	ECEA1HKS010B	1 50V
C134	ECEA1HKA010B	1 50V
C137	ECFR1C183KR	0.018 16V
C138	ECFR1C183KR	0.018 16V
C139	ECEA1HU2R2B	2.2 50V

Ref. No.	Part No.	Values & Remarks
C140	ECEA1CKA100B	10 16V
C141	ECEA1HU0R1B	0.1 50V
C142	ECFR1C223MR	0.022 16V
C143	ECEA1HKA010B	1 50V
C144	ECEA1HKA010B	1 50V
C145	ECEA1CKA100B	10 16V
C146	ECEA1CKA100B	10 16V
C150	ECEA1AU470B	47 10V
C151	ECEA1HKA010B	1 50V
C152	ECEA1HKA010B	1 50V
C153	ECBT1H102KB5	1000P 50V
C154	ECBT1H102KB5	1000P 50V
C155	ECEA1CKA100B	10 16V
C156	ECEA1CKA100B	10 16V
C159	ECBT1C472MR5	4700P 16V
C160	ECBT1C472MR5	4700P 16V
C161	ECEA1CU101B	100 16V
C162	ECEA0JU471B	470 6.3V
C163	ECEA1HKA010B	1 50V
C164	ECEA1HKA010B	1 50V
C165	ECEA1CKA100B	10 16V
C166	ECEA1CKA100B	10 16V
C167	ECEA50ZR68B	0.68 50V
C168	ECEA50ZR68B	0.68 50V
C169	ECEA1EU4R7B	4.7 25V
C170	ECEA1EU4R7B	4.7 25V
C171	ECEA1CKA100B	10 16V
C172	ECEA1CU220B	22 16V
C173	ECBT1C103MS5	0.01 16V
C174	ECEA1EU4R7B	4.7 25V
C175	ECEA1CU101B	100 16V
C176	ECQV1H473JZ3	0.047 50V
C177	ECBT1H102KB5	1000P 50V
C178	ECBT1H102KB5	1000P 50V
C179	ECBT1C103MS5	0.01 16V
C180	ECFR1C103MR	0.01 16V
C181	ECBT1C103MS5	0.01 16V
C182	ECEA1EU4R7B	4.7 25V
C183	ECQV1H474JZ3	0.47 50V
C184	ECQP2A152JZT	1500P 100V
C185	ECQP2A472JZT	4700P 100V
C186	ECEA1AU470B	47 10V
C187	ECBT1H471KB5	470P 50V
C188	ECBT1H471KB5	470P 50V
C189	ECQP2A272JZT	2700P 100V
C190	ECBT1C103MS5	0.01 16V
C201	ECEA1CU101B	100 16V
C202	ECFR1E104ZF5	0.1 25V
C301	ECBT1H101KB5	100P 50V

Ref. No.	Part No.	Values & Remarks
C302	ECBT1H101KB5	100P 50V
C303	ECBT1E103ZF5	0.01 25V
C304	ECBT1E103ZF5	0.01 25V
C309	ECBT1E103ZF5	0.01 25V
C310	ECBT1E103ZF5	0.01 25V
C311	ECBT1H102KB5	1000P 50V
C312	ECBT1H102KB5	1000P 50V
C315	ECBT1H470J5	47P 50V
C316	ECBT1H470J5	47P 50V
C317	ECBT1H470J5	47P 50V
C318	ECBT0J223MS5	0.022 6.3V
C319	ECEA1HKAR47B	0.47 50V
C320	ECEA1HKA3R3B	3.3 50V
C321	ECEA1HKA3R3B	3.3 50V
C322	ECEA1HKA3R3B	3.3 50V
C323	ECEA1HKA0R1B	0.1 50V
C324	ECEA1HKA0R1B	0.1 50V
C325	ECEA1HKAR22B	0.22 50V
C326	ECEA1HKAR22B	0.22 50V
C327	ECBT1C222MR5	2200P 16V
C328	ECBT1C222MR5	2200P 16V
C329	ECEA1HKA010B	1 50V
C330	ECEA1HKA010B	1 50V
C331	ECEA1HKAR22B	0.22 50V
C332	ECEA1HKAR22B	0.22 50V
C333	ECEA1HKAR22B	0.22 50V
C334	ECEA1HKAR22B	0.22 50V
C339	ECEA1HKA010B	1 50V
C340	ECEA1HKA010B	1 50V
C341	ECEA1HKA010B	1 50V
C342	ECEA1CKA220B	22 16V
C343	ECFR1C104MR	0.1 16V
C344	ECFR1C104MR	0.1 16V
C346	ECBT1H101KB5	100P 50V
C347	ECBT1H101KB5	100P 50V
C348	ECFR1C104MR	0.1 16V
C349	ECBT1E103ZF5	0.01 25V
C350	ECKR1H103ZF5	0.01 50V
C355	ECBT1E103ZF5	0.01 25V
C356	ECBT1E103ZF5	0.01 25V
C357	ECBT1H101KB5	100P 50V
C358	ECBT1H101KB5	100P 50V
C359	ECBT1H270J5	27P 50V
C360	ECBT1H270J5	27P 50V
C361	ECBT1H102KB5	1000P 50V
C363	ECBT1H102KB5	1000P 50V
C365	ECEA1HKA3R3B	3.3 50V
C366	ECEA1HKA3R3B	3.3 50V
C367	ECEA1HKAR33B	0.33 50V

Ref. No.	Part No.	Values & Remarks
C368	ECEA1HKAR33B	0.33 50V
C369	ECEA1HKA3R3B	3.3 50V
C370	ECEA0JKA470B	47 6.3V
C372	ECBT1E103ZF5	0.01 25V
C373	ECKR1H103ZF5	0.01 50V
C374	ECEA1CKA220B	22 16V
C375	ECBT1H101KB5	100P 50V
C376	ECBT1H101KB5	100P 50V
C377	ECKR1H103ZF5	0.01 50V
C378	ECEA1HKA010B	1 50V
C501	ECEA1HKAR47B	0.47 50V
C502	ECEA1HKAR47B	0.47 50V
C503	ECBT1H102KB5	1000P 50V
C504	ECBT1H102KB5	1000P 50V
C505	ECBT1H331KB5	330P 50V
C506	ECBT1H331KB5	330P 50V
C507	ECBT1H8R2KC5	8.2P 50V
C508	ECBT1H8R2KC5	8.2P 50V
C509	ECEA1HKA010B	1 50V
C510	ECEA1HKA010B	1 50V
C511	ECEA1HU330B	33 50V
C512	ECEA2AU100B	10 100V
C513	ECKR1H473ZF5	0.047 50V
C514	ECKR1H473ZF5	0.047 50V
C515	ECBT1E103ZF5	0.01 25V
C516	ECBT1E103ZF5	0.01 25V
C517	ECA1EU222EV	2200 25V [M]
C518	ECKR1H103ZF5	0.01 50V
C519	ECKR1H103ZF5	0.01 50V
C520	ECQE1224KF3	0.22 100V [M]
C521	ECKR1H103ZF5	0.01 50V
C522	ECEA1HU222E	2200 50V ⚠
C523	ECEA1HU222E	2200 50V ⚠
C528	ECEA1AKA470B	47 10V
C529	ECBT1E103ZF5	0.01 25V
C530	ECBT1E103ZF5	0.01 25V
C531	ECEA1HKA010B	1 50V
C536	ECEA1VU470B	47 10V ⚠
C537	ECBT1E103ZF5	0.01 25V
C538	ECEA1CKA470B	47 16V ⚠
C539	ECBT1E103ZF5	0.01 25V
C540	ECKR1H102KBD	1000P 50V (EG)
C541	ECKR1H102KBD	1000P 50V (EG)
C542	ECKR1H473ZF5	0.047 50V
C550	ECEA1HU330B	33 50V
C551	ECEA1HU101B	100 50V
C552	ECKR1H103ZF5	0.01 50V
C553	ECEA1HKA3R3B	3.3 50V
C554	ECBT1E103ZF5	0.01 25V

Ref. No.	Part No.	Values & Remarks
C555	ECEA0JKA101B	100 6.3V
C556	ECBT1E103ZF5	0.01 25V
C557	ECEA1CKA330B	33 16V
C558	ECEA1VU101B	100 10V
C560	ECEA0JKA101B	100 6.3V
C561	ECBT1E103ZF5	0.01 25V
C562	ECEA1AKA470B	47 10V
C563	ECBT1E103ZF5	0.01 25V
C564	ECEA1CKA330B	33 16V
C701	ECEA0JKA220I	22 6.3V
C702	ECEA1HKA010I	1 50V
C703	ECEA0JKA101I	100 6.3V
C704	ECUZ1E104MBN	0.1 25V
C705	ECEA1HKA010I	1 50V
C706	ECUV1H101JCN	100P 50V
C707	ECUV1E273KBN	0.027 25V
C708	ECUV1H472KBN	4700P 50V
C709	ECUV1C473KBN	0.047 16V
C710	ECUV1H152KBN	1500P 50V
C711	ECUZ1E104MBN	0.1 25V
C712	ECUZ1E104MBN	0.1 25V
C713	ECUV1C104MBM	0.1 16V
C714	ECEA0JKA101I	100 6.3V
C715	ECEA0JKA470I	47 6.3V
C716	ECUV1H561KBN	560P 50V
C717	ECUZ1E104MBN	0.1 25V
C718	ECUV1C224KBM	0.22 16V
C721	ECUV1H270JCN	27P 50V
C722	ECUV1H270JCN	27P 50V
C723	ECEA1AKA221I	220 10V
C724	ECUV1C104MBM	0.1 16V
C725	ECUV1H102KBN	1000P 50V
C726	ECUV1H102KBN	1000P 50V
C727	ECEA1HPK010I	1 50V
C728	ECEA1HPK010I	1 50V
C730	ECUZ1E104MBN	0.1 25V
C731	ECEA0JKA221I	220 6.3V
C732	ECEA0JKA221I	220 6.3V
C733	ECUZ1E104MBN	0.1 25V
C734	ECEA1AKA221I	220 10V
C735	ECUZ1E104MBN	0.1 25V
C736	ECUZ1E104MBN	0.1 25V
C737	ECUZ1E104MBN	0.1 25V
C738	ECUV1C154KBN	0.15 16V
C742	ECUV1E273KBN	0.027 25V
C743	ECUZ1E104MBN	0.1 25V
C744	ECUV1E822KBN	8200P 25V
C745	ECUV1C473MBN	0.047 16V
C746	ECUV1H050DCN	5P 50V

Ref. No.	Part No.	Values & Remarks
C747	ECUV1H222KBN	2200P 50V
C748	ECUV1H471KBM	470P 50V
C872	ECEA1HKA3R3B	3.3 50V
C880	ECBT1H331KB5	330P 50V
C881	ECBT1H331KB5	330P 50V
C900	ECBT1H101KB5	100P 50V
C901	ECBT1H101KB5	100P 50V
C902	ECEA0JKA101B	100 6.3V
C903	ECBT1H102KB5	1000P 50V
C904	ECEA0JU102B	1000 6.3V
C905	ECEA0JU102B	1000 6.3V
C906	ECBT1H102KB5	1000P 50V
C907	ECBT1C103MS5	0.01 16V
C908	ECBT1C103MS5	0.01 16V
C909	ECBT1H561KB5	560P 50V
C910	ECBT1H561KB5	560P 50V
C911	ECBT1H561KB5	560P 50V
C912	ECEA0JKA470B	47 6.3V
C913	ECBT1H561KB5	560P 50V
C914	ECBT1H561KB5	560P 50V
C915	ECBT1H561KB5	560P 50V
C916	ECBT1H561KB5	560P 50V
C917	ECBT1C103MS5	0.01 16V
C918	ECBT1C103MS5	0.01 16V
C919	ECBT1H101KB5	100P 50V
C920	ECBT1H101KB5	100P 50V
C921	ECEA1HKA010B	1 50V
C922	ECEA1HKA010B	1 50V
C923	ECBT1C103MS5	0.01 16V
C924	ECBT1H180JC5	18P 50V
C925	ECBT1H220JC5	22P 50V
C926	ECBT1H680J5	68P 50V
C927	ECBT1H680J5	68P 50V
C928	ECBT1H560J5	56P 50V
C929	ECBT1H560J5	56P 50V
C930	ECBT1H102KB5	1000P 50V
C931	ECBT1H102KB5	1000P 50V
C932	ECEA1HKAR33B	0.33 50V
C933	ECEA1HKAR33B	0.33 50V
C934	ECEA1VKA330B	33 10V
C935	ECBT1C103MS5	0.01 16V
C936	ECBT1C103MS5	0.01 16V
C937	ECBT1H101KB5	100P 50V
C938	ECBT1H102KB5	1000P 50V
C939	ECBT1H102KB5	1000P 50V
C940	ECBT1H473ZF5	0.047 50V
C941	ECBT1H471KB5	470P 50V
C951	ECBT1H101KB5	100P 50V
C971	ECBT1H101KB5	100P 50V

Ref. No.	Part No.	Values & Remarks
	CHIP JUMPERS	
RJ701	ERJ8GEY0R00A	0 1/10W
RJ702	ERJ8GEY0R00A	0 1/10W
RJ703	ERJ8GEY0R00A	0 1/10W
RJ704	ERJ8GEY0R00A	0 1/10W
RJ707	ERJ8GEY0R00A	0 1/10W
RJ708	ERJ8GEY0R00A	0 1/10W
RJ709	ERJ8GEY0R00A	0 1/10W
RJ714	ERJ8GEY0R00A	0 1/10W
RJ715	ERJ8GEY0R00A	0 1/10W
RJ716	ERJ8GEY0R00A	0 1/10W
RJ717	ERJ8GEY0R00A	0 1/10W
RJ721	ERJ6GEY0R00A	0 1/10W
RJ724	ERJ6GEY0R00A	0 1/10W
RJ725	ERJ6GEY0R00A	0 1/10W
RJ726	ERJ6GEY0R00A	0 1/10W
RJ799	ERJ6GEY0R00A	0 1/10W
	TEST JUMPERS	
TJ701	EYF8CU	TEST JUMPER
TJ702	EYF8CU	TEST JUMPER
	<LOADING MOTOR>	
	RESISTORS	
R501	ERDS2TJ271T	270 1/4W
	CAPACITORS	
C501	ECA1AKF820B	82 10V

Packing Materials & Accessories

Notes:
- Important safety notice:
  Components identified by ⚠ mark have special characteristics important for safety.
  Furthermore, special parts which have purposes of fire-retardant (resistors), high-quality sound (capacitors), low noise (resistors), etc are used.
  When replacing any of these components, be sure to use only manufacturer's specified parts shown in the parts list .
- The parenthesized indications in the Remarks columns specify the areas. (Refer to the cover page for area)
  Parts without these indications can be used for all areas.
- Remote Control Unit:
  Supply period for three years from terminal of production.
- The "(SF)" mark denotes the standard part.
- [M] Indicates in the Remarks columns indicates parts supplied by **MESA.**
- [VRD] Indicates in the Remarks columns indicates parts supplied by **Video Recorder Division.**
- Warning : This product uses a laser diode. Refer to caution statements on page 3.
  ACHTUNG : • Die lasereinheit nicht zerlegen.
  • Die lasereinheit darf nur gegen eine vom hertsteller spezifizierte einheit ausgetauscht werden.

Ref. No.	Part No.	Part Name & Description	Remarks
		ACCESSORIES	
A1	EUR643801	REMOTE CONTROL	[M]
A2	RQT2809-B	INSTRUCTION MANUAL	[M] (EB)
A2	RQT2810-E	INSTRUCTION MANUAL	[M] (E, EG)
A2	RQT2811-G	INSTRUCTION MANUAL	[M] (E)
A3	RJA0019-2K	AC CORD	(SF)(E, EG)⚠
A3	VJA0733	AC CORD	[VRD](SF)(EB)⚠
A4	SLA9Z5T	LOOP ANT	[M]
A5	SSA270M	FM ANTENNA	
A6	RMN0244	ANT HOLDER	

Ref. No.	Part No.	Part Name & Description	Remarks
A7	SJP9009	ANT ADAPTER	(EB)
A8	XTN3+12AFZ	SCREW (ANT HOLDER)	
		PACKING MATERIALS	
P1	RPG2422	GIFT BOX	[M] (E, EG)
P1	RPG2423	GIFT BOX	[M] (EB)
P2	RPN0863	POLYFOAM	[M]
P3	SPSD155	ACCESSORY CASE	
P4	XZB24X33C04	VINYL BAG	
P5	RPF0100	BAG (SET)	[M]

Packaging

P3(SPSD155) : ACCESSORY CASE
- P4 (XZB24X33C04) : VINYL BAG
  - A2 (RQT2809-B) : INSTRUCTION MANUAL (EB)
  - (RQT2810-E) : INSTRUCTION MANUAL (E, EG)
  - (RQT2811-G) : INSTRUCTION MANUAL (E)
  - A5 (SSA270M) : FM ANTENNA
  - PREPARED AM LOOP ANT
  - A4 (SLA9Z5T) : LOOP ANT
  - A6 (RMN0244) : ANT HOLDER
  - A8 (XTN3+12AFZ) : SCREW
- A1 (EUR643801) : REMOTE CONTROL
- A3 (RJA0019-2K) : AC CORD (E, EG)
- (VJA0733) : AC CORD (EB)
- A7 (SJP9009) : ANT ADAPTER (EB)

P2(RPN0863)
- *P2 (A)
- *P2 (B)
- *P2 (C)
- *P2 (D)

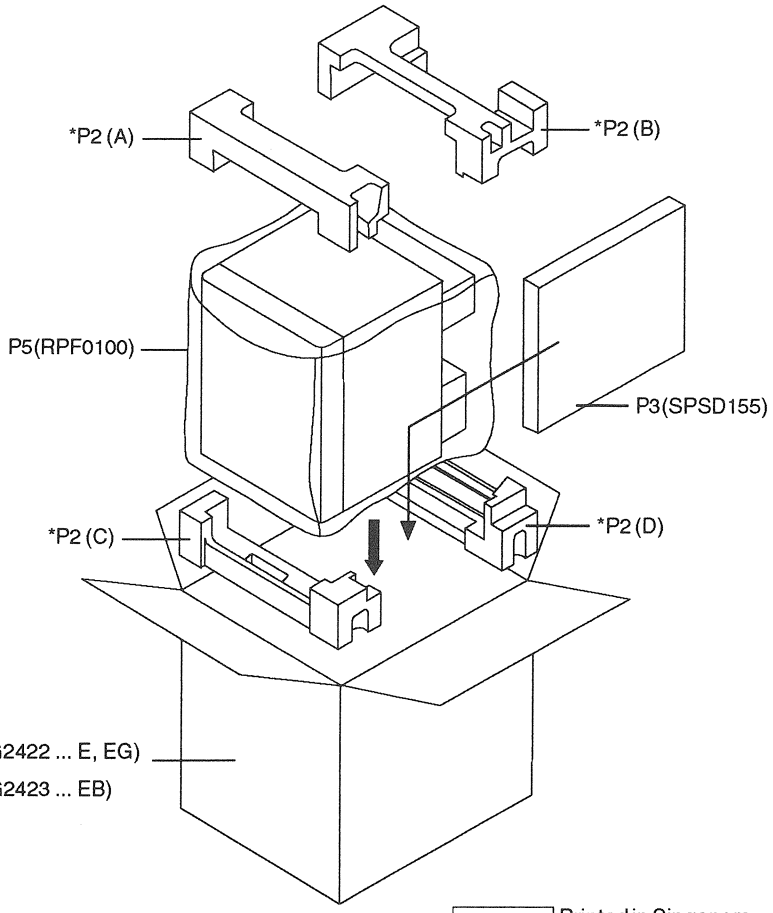

MESA Printed in Singapore
G950210900 A/J/C/X