ORDER NO. MD0305201C2

# Service Manual

## DVD Stereo System

# SA-DP1E
# SA-DP1EB
# SA-DP1EG

Colour

(S)... Silver Type

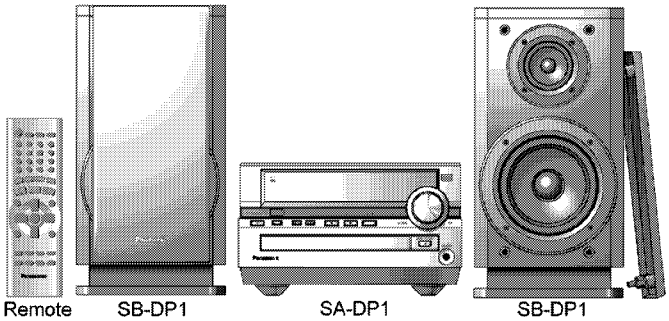

Remote Control Transmitter SB-DP1 SA-DP1 SB-DP1

## Specifications

**■ AMPLIFIER SECTION**

RMS Output Power both channel driven

10% total harmonic distortion

| | |
|---|---|
| 1 kHz | (Low-channel) 25 W per channel (6 Ω) |
| 8 kHz | (Low-channel) 25 W per channel (6 Ω) |
| Total Bi-Amp power | 50 W per channel |
| Total RMS Stereo mode power | 100 W |
| Total RMS Dolby Digital mode power | 100 W |

DIN Output Power both channel driven

40 W per channel

1% total harminic distortion

| | |
|---|---|
| 1 kHz | (Low-channel) 20 W per channel (6 Ω) |
| 8 kHz | (High-channel) 20 W per channel (6 Ω) |
| Total DIN Power in Stereo mode | 80 W |
| Total DIN Power in Dolby Digital Mode | 80 W |

Input sensitivity/Input impedance

| | |
|---|---|
| AUX | 250 mV, 19 kΩ |

**■ FM TUNER SECTION**

| | |
|---|---|
| Frequency range | 87.50 - 108.00 MHz (50 kHz steps) |
| Sensitivity | 2.5μV (IHF) |
| S/N 26 dB | 2.2 μV |
| Antenna terminal(s) | 75 Ω (unbalanced) |
| Preset station | 15 |

**■ AM TUNER SECTION**

| | |
|---|---|
| Frequency range | 522 - 1629 kHz (9 kHz steps)<br>520 - 1710 kHz (10 kHz steps) |
| Sensitivity S/N 20 dB at 999 kHz | 560 μV/m |
| Preset station | 15 |

**■ DISC SECTION**

Disc played [8 cm or 12 cm]

(1) DVD-RAM (DVD-VR compatible)

(2) DVD-Audio

(3) DVD-Video

(4) DVD/R (DVD-Video compatible)

(5) CD-Audio (CD-DA)

(6) Video CD

(7) SVCD (Confirming to IEC62107)

(8) CD-R/CD-RW (CD-DA, Video-CD formatted disc)

(9) MP3/WMA

- Maximum number of tracks and groups recognizable:

999 tracks and 99 groups

- Compatible compression rate:

MP3: between 32 kbps and 320 kbps

**Panasonic**

© 2003 Panasonic AVC Networks Singapore Pte. Ltd. All rights reserved. Unauthorized copying and distribution is a violation of law.

WMA: between 48 kbps and 192 kbps
(10) JPEG
- Exif Ver 2.1 JPEG Baseline files
- Maximum number of pictures and groups recognizable:
3000 pictures and 300 groups
- Picture resolution: between 320 x 240 and 6144 x 4096 pixels
(Sub sampling is 4:2:2 or 4:2:0)
(11) HighMAT Level 2 (Audio and Image)

| | |
|---|---|
| Video | |
| Signal system | PAL/PAL60/NTSC |
| Output level | |
| Composite video | 1 Vp-p (75Ω) |
| S-video Y output level | 1 Vp-p (75Ω) |
| C output level | 0.3 Vp-p (75Ω)(PAL) |
| | 0.286 Vp-p (75Ω)(NTSC) |
| RGB | |
| G output level | 1 Vp-p (75Ω) |
| B output level | 0.7 Vp-p (75Ω) |
| R output level | 0.7 Vp-p (75Ω) |
| Audio | |
| Sampling frequency | |
| CD | 44.1 kHz |
| MP3 | 32 kHz, 44.1 kHz, 48 kHz |
| DVD (Linear Audio) | 48 kHz, 96 kHz |
| DVD-Audio | 192 kHz |
| Decoding | 16/20/24 bit linear |
| Number of channels | Stereo |
| Frequency response | 20 Hz - 20 kHz (+1, -2 dB) |
| Digital audio output | |
| Optical digital output | Optical terminal |
| Pick up | |
| Beam Source | Semiconductor Laser |
| Wavelength | |
| DVD | 658 nm |
| VCD/CD | 780 nm |
| Wow and flutter | Less than possible measurement data |
| D/A converter | Delta sigma DAC |

**■ GENERAL**

| | |
|---|---|
| Power Supply | |
| (For E & EG only) | AC 230 -240 V, 50Hz |
| (For EB only) | AC 230 V, 50Hz |
| Power consumption | 105 W |
| Power Consumption in standby mode | 1 W |
| Dimensions (W x H x D) | 205 x 123.5 x 383.5 mm |
| Mass | 4.2 kg |

**■ SYSTEM**

| | |
|---|---|
| ■ System : SC-DP1 (E) | Main unit: SA-DP1 (E)<br>Speaker: SB-DP1 (EG) |
| ■ System : SC-DP1 (EB) | Main unit: SA-DP1 (EB)<br>Speaker: SB-DP1 (EG) |
| ■ System : SC-DP1 (EG) | Main unit: SA-DP1 (EG)<br>Speaker: SB-DP1 (P) |

**Notes:**

1. Specifications are subject to change without notice. Mass and dimensions are approximate.
2. Total harmonic distortion is measured by the digital spectrum analyzer.

## ⚠ WARNING

This service information is designed for experienced repair technicians only and is not designed for use by the general public.
It does not contain warnings or cautions to advise non-technical individuals of potential dangers in attempting to service a product.
Products powered by electricity should be serviced or repaired only by experienced professional technicians. Any attempt to service or repair the product or products dealt with in this service information by anyone else could result in serious injury or death.

# CONTENTS


Page

**1 Before Repair and Adjustment** ---- **4**
**2 Safety Precautions** ---- **4**
2.1. General Guidelines ---- 4
**3 Prevention of Electro Static Discharge (ESD) to Electrostatically Sensitive (ES) Devices** ---- **5**
**4 Accessories** ---- **5**
**5 Caution for AC Main Lead** ---- **7**
**6 Precaution of Laser Diode** ---- **8**
**7 Handling the Lead-free Solder** ---- **8**
7.1. About lead free solder (PbF) ---- 8
**8 Cautions to be taken when handling Optical Pickup** ---- **10**
8.1. Handling Optical Pickup ---- 10
8.2. Cautions to be taken during replacement of Optical Pickup ---- 10
8.3. Grounding for Preventing Electrostatic Destruction ---- 10

Page

**9 Optical Pickup Self-Diagnosis and Replacement Procedure** ---- **11**
9.1. Self-diagnosis ---- 11
9.2. Cautions to Be Taken During Replacement of Optical Pickup and Spindle Motor ---- 12
**10 Self-Diagnosis Function** ---- **13**
10.1. Automatic Displayed Error Codes ---- 13
10.2. Memorized Error Codes ---- 13
10.3. Mode Table 1 ---- 14
10.4. DVD/CD Self-Diagnosis Error Code Description ---- 14
10.5. Error Codes Stored During No Play ---- 14
10.6. Mode Table 2 ---- 15
10.7. Tray Lock Function ---- 17
10.8. Things to Do After Repair ---- 17
**11 Cautions To Be Taken During Servicing** ---- **17**
11.1. Recovery after the dvd player is repaired ---- 17

11.2. DVD Player Firmware Version Upgrade Process ..... 18
11.3. Firmware Version Upgrade Process by Using Disc and Recovery Process ..... 18
11.4. Using Recovery Disc ..... 19
11.5. Total Usage Time Display ..... 19
**12 Operation Procedure ..... 20**
**13 Disc information ..... 21**
**14 About HighMAT ..... 22**
14.1. What is HighMAT? ..... 22
14.2. Why use HighMAT? ..... 22
14.3. The advantages of using HighMAT ..... 22
14.4. Outline of the HighMAT standard ..... 23
**15 Procedure for repairing the set ..... 25**
15.1. Distinguish the trouble cause ..... 26
15.2. Diagnosis of Optical Pick-up Unit ..... 27
**16 Disassembly and Main Component Replacement Procedures ..... 29**
16.1. Checking for Main & ASP P.C.B. ..... 30
16.2. Disassembly for the DVD changer ass'y ..... 30
16.3. Checking for Panel P.C.B. ..... 31
16.4. Checking for DVD Module (2) P.C.B. ..... 32
16.5. Checking for Video Out P.C.B. , Power P.C.B. and Transformer P.C.B. ..... 32
16.6. Checking for Traverse Deck and Optical Pickup ..... 33
**17 Adjustment Procedure ..... 38**
17.1. Required Tools and Equipment ..... 38
**18 Terminal Function of IC ..... 40**
18.1. IC201 (C2DBJH000006) Micro-processor ..... 40
**19 Block Diagram ..... 41**
**20 Schematic Diagram ..... 47**
**21 Printed Circuit Board ..... 69**
**22 Wiring Connection Diagram ..... 86**
**23 Parts Location and Replacement Parts List ..... 88**
23.1. Loading Mechanism and Traverse Unit ..... 89
23.2. Cabinet ..... 92
23.3. Component Parts List ..... 95
23.4. Packing Materials & Accessories Parts List ..... 103
23.5. Packaging ..... 104

# 1 Before Repair and Adjustment

Disconnect AC power, discharge Power Supply Capacitors C517 & C518 through a 10 Ω, 5W resistor to ground.

DO NOT SHORT-CIRCUIT DIRECTLY (with a screwdriver blade, for instance), as this may destroy solid state devices.

After repairs are completed, restore power gradually using a variac, to avoid overcurrent.

Current consumption at AC 230V, 50Hz in NO SIGNAL mode should be ~150 mA .

# 2 Safety Precautions

## 2.1. General Guidelines

1. When servicing, observe the original lead dress. If a short circuit is found, replace all parts which have been overheated or damaged by the short circuit.
2. After servicing, see to it that all the protective devices such as insulation barriers, insulation papers shields are properly installed.
3. After servicing, make the following leakage current checks to prevent the customer from being exposed to shock hazards.

### 2.1.1. Leakage Current Cold Check

1. Unplug the AC cord and connect a jumper between the two prongs on the plug.
2. Measure the resistance value, with an ohmmeter, between the jumpered AC plug and each exposed metallic cabinet part on the equipment such as screwheads, connectors, control shafts, etc. When the exposed metallic part has a return path to the chassis, the reading should be between 1MΩ and 5.2MΩ.

   When the exposed metal does not have a return path to the chassis, the reading must be ¥.

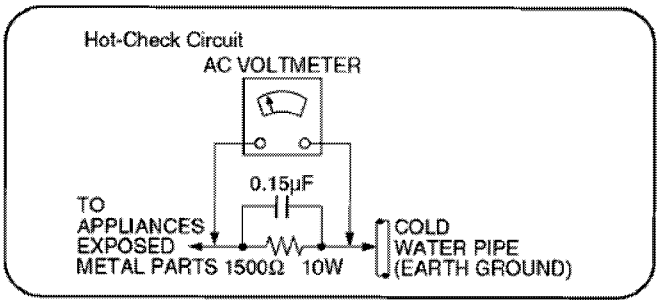


Figure 1

### 2.1.2. Leakage Current Hot Check (See Figure 1)

1. Plug the AC cord directly into the AC outlet. Do not use an isolation transformer for this check.
2. Connect a 1.5kΩ, 10 watts resistor, in parallel with a 0.15μF capacitor, between each exposed metallic part on the set and a good earth ground such as a water pipe, as shown in Figure 1.
3. Use an AC voltmeter, with 1000 phms/volt or more sensitivity, to measure the potential across the resistor.
4. Check each exposed metallic part, and measure the voltage at each point.
5. Reverse the AC plug in the AC outlet and repeat each of the above measurements.
6. The potential at any point should not exceed 0.75 volts RMS. A leakage current tester (Simpson Model 229 or equivalent) may be used to make the hot checks, leakage current must not exceed 1/2 milliamp. In case a measurement is out of the limits specified, there is a possibility of a shock hazard, and the equipment should be repaired and rechecked before it is returned to the customer.

# 3 Prevention of Electro Static Discharge (ESD) to Electrostatically Sensitive (ES) Devices

Some semiconductor (solid state) devices can be damaged easily by electricity. Such components commonly are called Electrostatically Sensitive (ES) Devices. Examples of typical ES devices are integrated circuits and some field-effect transistors and semiconductor "chip" components. The following techniques should be used to help reduce the incidence of component damage caused by electro static discharge (ESD).

1. Immediately before handling any semiconductor component or semiconductor-equiped assembly, drain off any ESD on your body by touching a known earth ground. Alternatively, obtain and wear a commercially available discharging ESD wrist strap, which should be removed for potential shock reasons prior to applying power to the unit under test.
2. After removing an electrical assembly equiped with ES devices, place the assembly on a conductive surface such as aluminium foil, to prevent electrostatic charge build up or exposure of the assembly.
3. Use only a grounded-tip soldering iron to solder or unsolder ES devices.
4. Use only an anti-static solder remover device. Some solder removal devices not classified as "anti-static (ESD protected)" can generate electrical charge to damage ES devices.
5. Do not use freon-propelled chemicals. These can generate electrical charges sufficient to damage ES devices.
6. Do not remove a replacement ES device from its protective package until immediately before you are ready to install it. (Most replacement ES devices are packaged with leads electrically shorted together by conductive foam, aluminium foil or comparable conductive material).
7. Immediately before removing the protective material from the leads of a replacement ES device, touch the protective material to the chassis or circuit assembly into which the device will be installed.

   **Caution**

   Be sure no power is applied to the chassis or circuit, and observe all other safety precautions.
8. Minimize body motions when handling unpackaged replacement ES devices. (Otherwise harmless motion such as the brushing together of your clothes fabric or the lifting of your foot from a carpeted floor can generate static electricity (ESD) sufficient to damage an ES device).

**IMPORTANT SAFETY NOTICE**

There are special components used in this equipment which are imporant for safety.
These parts are marked by ⚠ in the schematic diagrams, Exploded Views and replacement parts list. It is essential that these critical parts should be replaced with manufacturer's specified parts to prevent shock, fire, or other hazards. Do not modify the original design without permission of manufacturer.

# 4 Accessories

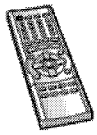

Remote control

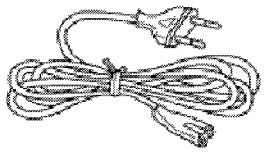

AC power supply cord (For E & EG only)

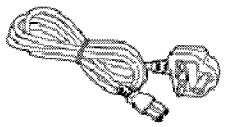

AC power supply cord (For EB only)

AM loop antenna

FM indoor antenna

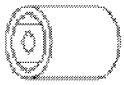

Antenna plug adaptor (For EB only)

Video Cable

# 5 Caution for AC Main Lead

**(For "EB" area code model only.)**

For your safety, please read the following text carefully.

This appliance is supplied with a moulded three pin mains plug for your safety and convenience.
A 5-ampere fuse is fitted in this plug.
Should the fuse need to be replaced please ensure that the replacement fuse has a rating of 5-ampere and that it is approved by ASTA or BSI to BS1362.

Check for the ASTA mark or the BSI mark on the body of the fuse.

If the plug contains a removable fuse cover you must ensure that it is refitted when the fuse is replaced.
If you lose the fuse cover, the plug must not be used until a replacement cover is obtained.
A replacement fuse cover can be purchased from your local dealer.

**CAUTION!**
IF THE FITTED MOULDED PLUG IS UNSUITABLE FOR THE SOCKET OUTLET IN YOUR HOME THEN THE FUSE SHOULD BE REMOVED AND THE PLUG CUT OFF AND DISPOSED OFF SAFELY.
THERE IS A DANGER OF SEVERE ELECTRICAL SHOCK IF THE CUT OFF PLUG IS INSERTED INTO ANY 13-AMPERE SOCKET.

If a new plug is to be fitted, please observe the wiring code as shown below.
If in any doubt please consult a qualified electrician.

**IMPORTANT**
The wires in this mains lead are coloured in accordance with the following code:

Blue: Neutral
Brown: Live

As these colours may not correspond with the coloured markings identifying the terminals in your plug, proceed as follows:
The wire which is coloured Blue must be connected to the terminal which is marked with the letter N or coloured Black or Blue.

The wire which is coloured Brown must be connected to the terminal which is marked with the letter L or coloured Brown or Red.

**WARNING: DO NOT CONNECT EITHER WIRE TO THE EARTH TERMINAL WHICH IS MARKED WITH THE LETTER E, BY THE EARTH SYMBOL ⏚ OR COLOURED GREEN OR GREEN/YELLOW.**

**THIS PLUG IS NOT WATERPROOF—KEEP DRY.**

**Before use**
Remove the connector cover.

**How to replace the fuse**
The location of the fuse differ according to the type of AC mains plug (figures A and B). Confirm the AC mains plug fitted and follow the instructions below.
Illustrations may differ from actual AC mains plug.

1. Open the fuse cover with a screwdriver.

Figure A

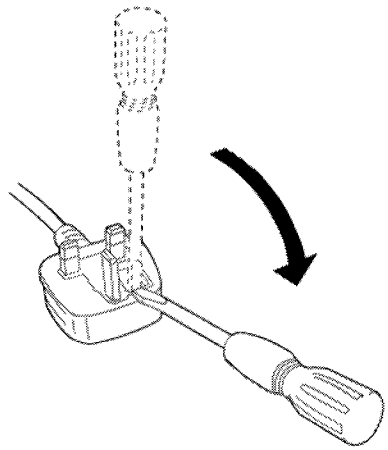

Figure B

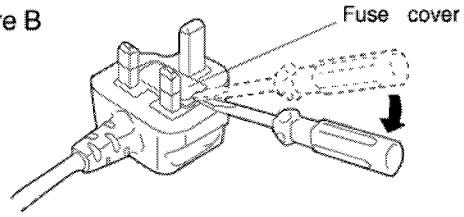


2. Replace the fuse and close or attach the fuse cover.

Figure A

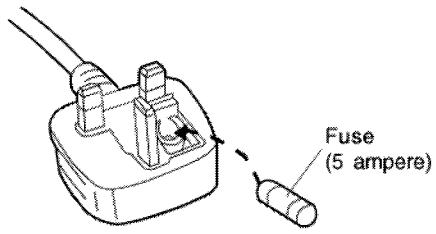


Figure B

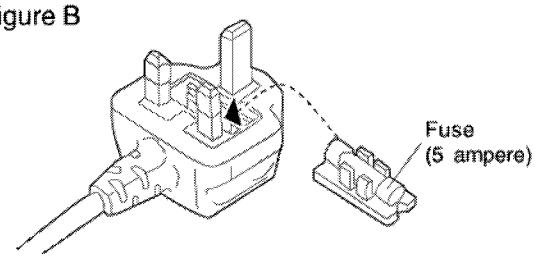

# 6 Precaution of Laser Diode

**Caution :**

This product utilizes a laser diode with the unit turned "ON", invisible laser radiation is emitted from the pick up lens.
Wavelength : 780 nm (CD/VCD) / 658nm (DVD)
Maximum output radiation power from pick up : 100 µW/VDE
Laser radiation from pick up unit is safety level, but be sure the followings:

1. Do not disassemble the optical pick up unit, since radiation from exposed laser diode is dangerous.
2. Do not adjust the variable resistor on the pick up unit. It was already adjusted.
3. Do not look at the focus lens using optical instruments.
4. Recommend not to look at pick up lens for a long time.

**ACHTUNG :**

Dieses Produkt enthält eine Laserdiode. Im eingeschalteten Zustand wird unsichtbare Laserstrahlung von der Lasereinheit abgestrahlt.
Wellenlänge : 780nm (CD/VCD) / 658nm (DVD)
Maximale Strahlungsleistung der Lasereinheit :100 µW/VDE
Die Strahlung an der Lasereinheit ist ungefährlich, wenn folgende Punkte beachtet werden:

1. Die Lasereinheit nicht zerlegen, da die Strahlung an der freigelegten Laserdiode gefährlich ist.
2. Den werkseitig justierten Einstellregler der Lasereinhit nicht verstellen.
3. Nicht mit optischen Instrumenten in die Fokussierlinse blicken.
4. Nicht über längere Zeit in die Fokussierlinse blicken.

**ADVARSEL: I dette a apparat anvendes laser.**

**CAUTION!**
THIS PRODUCT UTILIZES A LASER.
USE OF CONTROLS OR ADJUSTMENTS OR PERFORMANCE OF PROCEDURES OTHER THAN THOSE SPECIFIED HEREIN MAY RESULT IN HAZARDOUS RADIATION EXPOSURE.

**■ Use of Caution Labels**

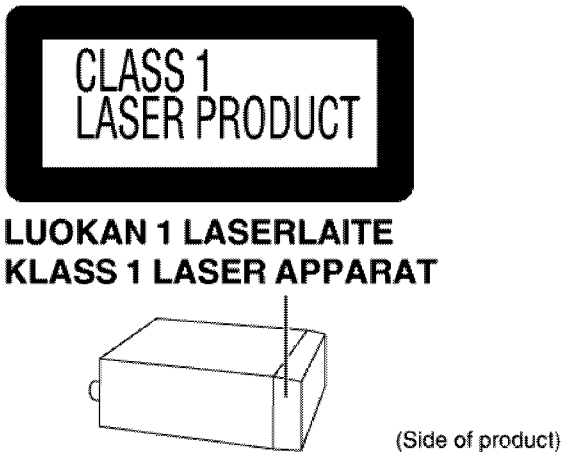


# 7 Handling the Lead-free Solder

## 7.1. About lead free solder (PbF)

**Distinction of PbF P.C.B.:**

P.C.B.s (manufactured) using lead free solder will have a PbF stamp on the P.C.B.

**Caution:**

- Pb free solder has a higher melting point than standard solder; Typically the melting point is 50 - 70°F (30 - 40°C) higher. Please use a high temperature soldering iron. In case of soldering iron with temperature control, please set it to 700 ± 20°F (370 ± 10°C).
- Pb free solder will tend to splash when heated too high (about 1100°F/600°C).

- When soldering or unsoldering, please completely remove all of the solder on the pins or solder area, and be sure to heat the soldering points with the Pb free solder until it melts enough.

# 8 Cautions to be taken when handling Optical Pickup

The laser diode used inside optical pickup could be destroyed due to static electricity as a potential difference is caused by electrostatic load discharged from clothes or human body. Handling the parts carefully to avoid electrostatic destruction during repair.

## 8.1. Handling Optical Pickup

1. Do not impact on optical pickup as the unit structurally uses an extremely precise technology.
2. Short-circuit the flexible cable of optical pickup remove from the circuit board using a short-circuit pin or clip in order to prevent laser diode from electrostatic destruction (Refer to Fig. 8.1 and Fig. 8.2)
3. Do not handle flexible cables forcibly as this may cause snapping. Handle the parts carefully (Refer to Fig. 8.1)
4. A new optical pickup is equipped with an anti-static flexible cable. After replacing and connecting to the flexible board, cut the anti-static flexible cable. (Refer to Fig. 8.1)

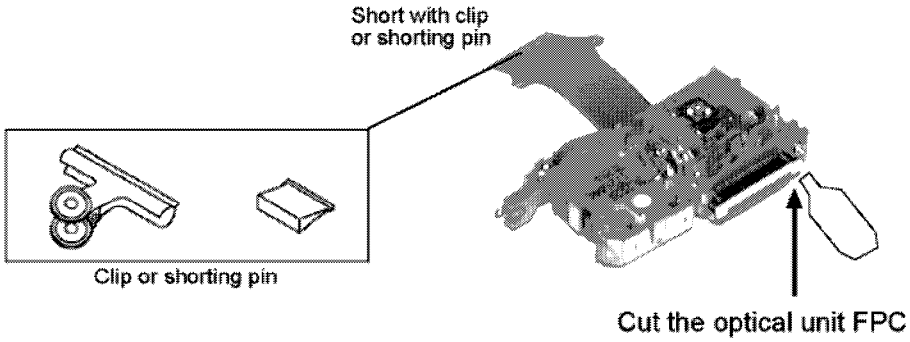


Fig. 8.1

## 8.2. Cautions to be taken during replacement of Optical Pickup

Supplied optical pickup is equipped with a short clip found its flexible cable in order to prevent electrostatic destruction of laser diode. Before connection, remove the short clip, and check that the short land is opened. (Remove solder if the part is short-circuit).

## 8.3. Grounding for Preventing Electrostatic Destruction

1. Human body grounding

   Use the anti-static wrist strap to discharge the static electricity accumulated in your body. (Refer to Fig. 8.2)
2. Work place grounding

   Place a conductive material (conductive sheet) or ironboard where optical pickup is placed. (Refer to Fig. 8.2)

**Note :**

Keep your clothes away from optical pickup as wrist strap does not release the static electricity charged in clothes.

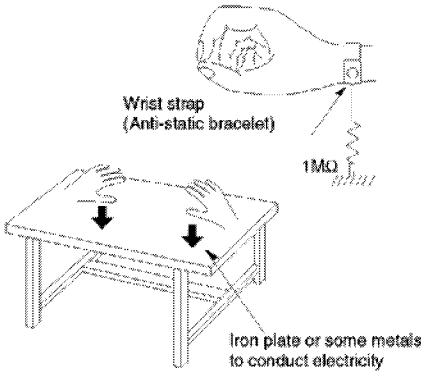


Fig. 8.2

# 9 Optical Pickup Self-Diagnosis and Replacement Procedure

## 9.1. Self-diagnosis

This unit is equipped with the optical pickup self-diagnosis function and the tilt adjustment check function. Follow the procedure described below during repair in order to perform self-diagnosis and tilt adjustment effectively. Especially when “NO DISC” is displayed, be sure to apply the self-diagnosis function before replacing with an optical pickup. Replacement of optical pickup generally requires when the present value of laser drive exceeds 45 (DVD) or 45 (CD).

**Note:**

Start diagnosis within three minutes after turning on the power (as diagnosis fails when the unit becomes warm).

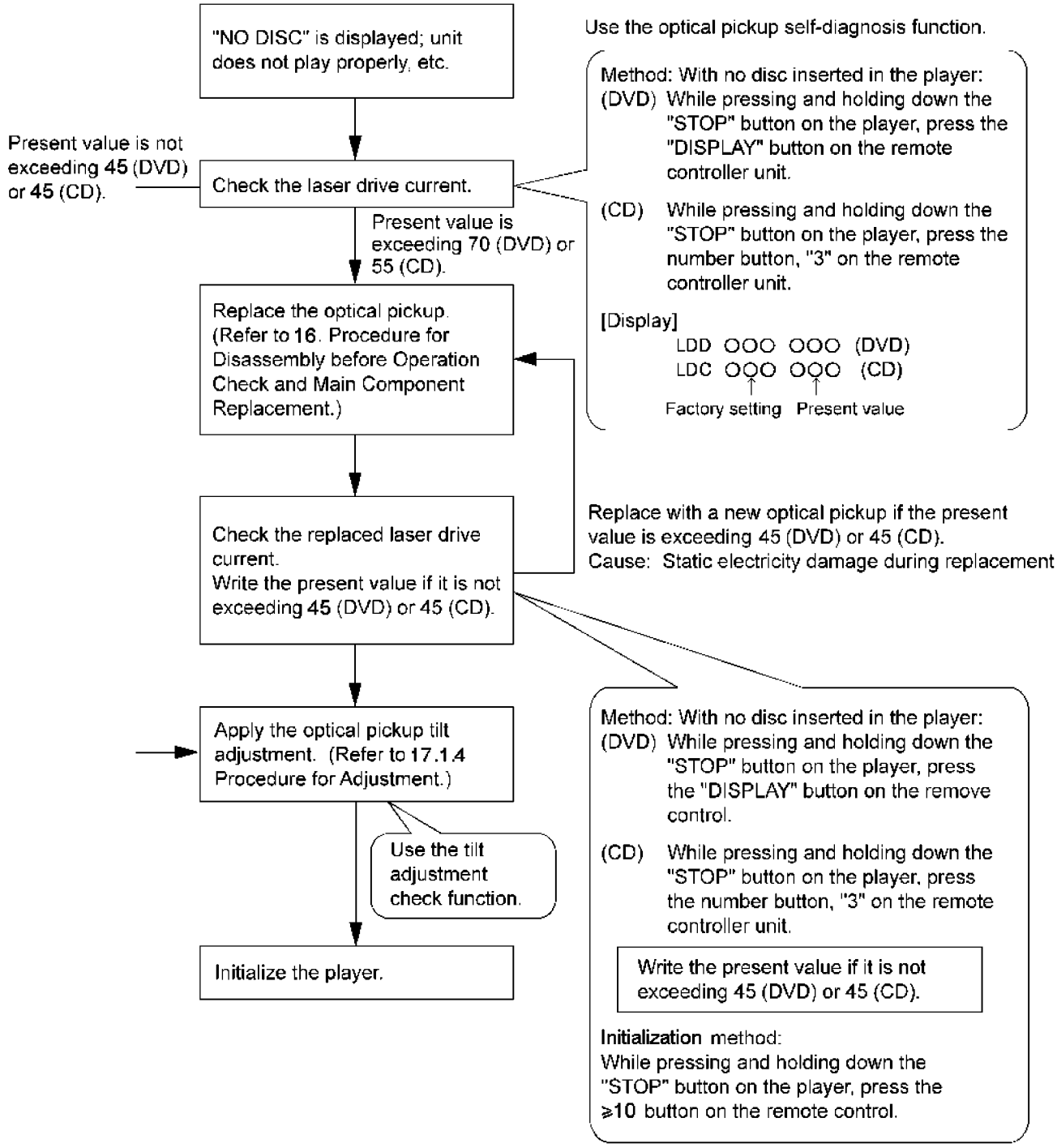

## 9.2. Cautions to Be Taken During Replacement of Optical Pickup and Spindle Motor

Before replacing the optical pickup and spindle motor, check a total usage time respectively. Follow the checking method described below.

| Item | Status and Key Function | Display |
|---|---|---|
| Checking DVD, CD laser usage time | With the unit stopped and no disc inserted, press the. ■ button on the player and the ▲ button on the remote controller unit. | T1_xxxx_yyyy<br>xxxx(DVD), yyyy(CD): total time is displayed with a four-digit number by the ten hours. |
| Checking spindle motor usage time | With the unit stopped and no disc inserted, press the ■ button on the player and the ► button on the remote controller unit. | T2_xxxxx<br>xxxxx: total time is displayed with a four-digit number by the ten hours. |
| Resetting DVD, CD laser usage time | While the DVD and CD laser usage times are displayed, press the ■ button on the player and the ▼ button on the remote controller unit. | T1_0000_0000 |
| Resetting spindle motor usage time | While the spindle motor usage time is displayed, press the ■ button on the player and the ◄ button on the remote controller unit. | T2_0000 |

### 9.2.1. Cautions to be taken during replacement of optical pickup

Optical pickup could be damaged due to the static electricity discharged from human body. Wear proper protection gear against static electricity during optical pickup and its peripheral repair. (Refer to "Cautions to Be Taken When Handling Optical Pickup".)

- Do not touch laser diode, actuator and their peripherals.
- Do not check laser diode with a tester and such. (The tester will be destroyed.)
- For short-circuiting or removing laser diode, the use of an anti-static soldering iron is recommended. (Recommended model: HAKKO ESD product)
- Solder the land of the flexible cable in the optical pickup.

**Note:**

If an anti-static soldering iron is not available, short-circuit the terminal surface of the flexible cable and then the land using a clip or equivalent device.

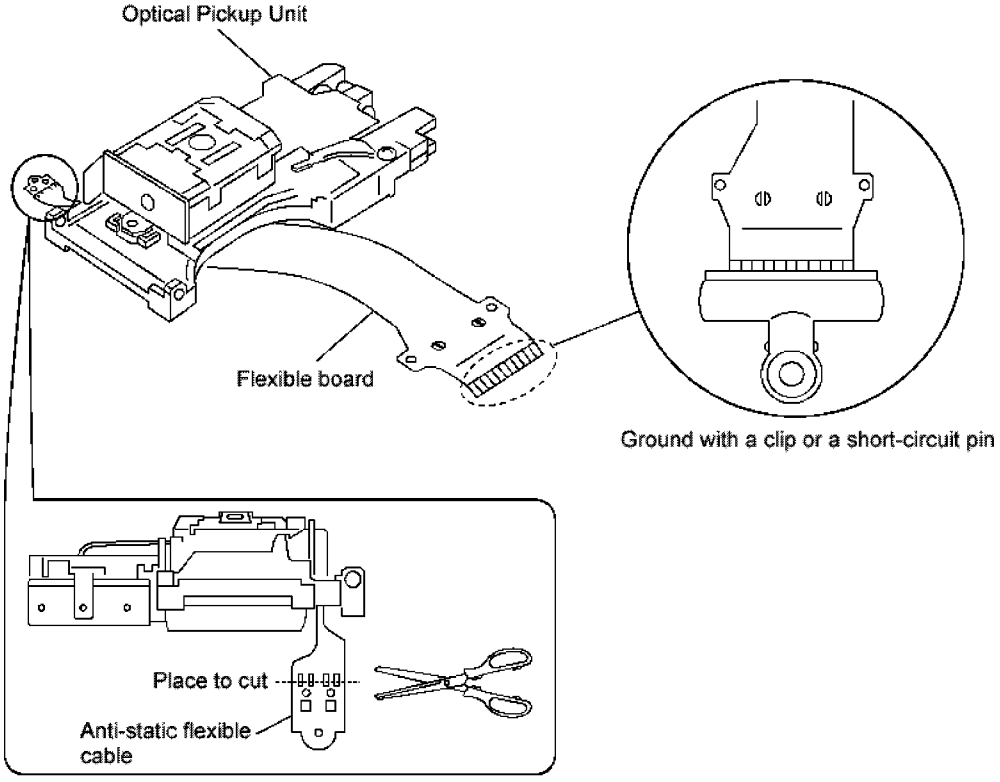

# 10 Self-Diagnosis Function

This unit is equipped with the self-diagnosis function, which displays an error when it occurs, for use during servicing.

## 10.1. Automatic Displayed Error Codes

### 10.1.1. Automatic Display Function

For a power unit error, the code is automatically displayed.

**F61:** Automatically displayed on the LCD of the player.

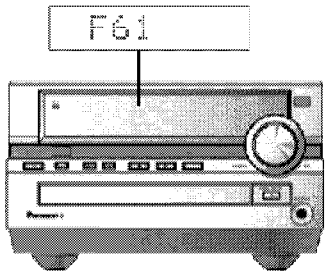


Fig. 10-1

### 10.1.2. Re-Display

- **For F61 Display**
  - When the code, F61 is displayed, the power is automatically turned off.
  - The code, F61 is displayed for three seconds, and then the current time appears.
  - To retrieve the code, turn on the power button so that the code F61 appears, however, is switched to time display after three seconds, and the power is automatically turned off.
- **For F76 Display**
  - The abnormalities is an output or the abnormalities in a power supply of POWER AMP.

### 10.1.3. Description of Error Code

#### 10.1.3.1. F61

- **State, Condition**

  When the power is turned on, the unit is automatically turned off. The power does not turn on.
- **Cause, Troubleshooting**

  Power circuit system failure and/or direct current flown to speaker terminal
  Identify the cause and replace with new parts.

## 10.2. Memorized Error Codes

### 10.2.1. Activating Self-Diagnosis Function and Displaying Method

1. Turn on the power.
2. Select DVD/CD function. With no DVD/CD inserted in the player, press and hold down the ■ button for at least two seconds, and press the "0" button on the remote control for at least two seconds in order to display "DVD_F_ _ _ ".
3. Press the ■ button. If a memorized error is detected, the result of self diagnosis is displayed. (Ex.: T H15)
   If several errors are detected, press the ■ button to display each.

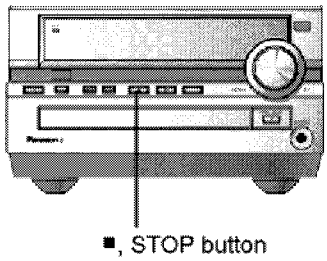


**Fig. 10-2**

### 10.2.2. Re-Display

- Press the power button to turn off the power, and then turn on the power.
- The details of self diagnosis are stored in the unit memory.
  To retrieve them, follow the procedure described the above, “Activating Self-Diagnosis Function and Displaying Method”.

## 10.3. Mode Table 1

Following modes are available with combinations of the pressed buttons on the player and on the remote controller unit.

| Player | Remote controller unit | Usage |
|---|---|---|
| ■ button | 0 | Error code display (Refer to the item, 9.4. DVD Error Code Description) |
| | 5 | Tilt adjustment |
| | 6 | Region number and broadcasting system check |
| | 7 | Built-in program version check |
| | DISPLAY | DVD laser drive current check |
| | 3 | CD laser drive current check |
| | PAUSE | Writing of laser drive current value after replacement of optical pickup<br>(Do use this function only when optical pickup is replaced.) |
| | ≧10 | Initialization of the player (factory setting is restored.)<br>Used after replacement of micro-computer and its peripherals and printed circuit board. |

## 10.4. DVD/CD Self-Diagnosis Error Code Description

| Error Code | State, Conditon | Cause, Troubleshooting |
|---|---|---|
| H15 | The disc tray cannot be opened: it closes spontaneously. | Disc tray open/close detection switch (S1001) failure.<br>(Check and replace) |
| H16 | The disc tray cannot be closed: it opens spontaneously. | |

| Error Code | Meaning | Details |
|---|---|---|
| U. H. Error | | |
| U11 | Focus servo failure | |
| H01 | Tray loading failure | |
| H02 | Spindle servo failure | (Spindle servo, DSC, SP motor, CLV servo failure) |
| H03 | Traverse motor failure | |
| H04 | Tracking servo error | |
| H05 | Seek timeout failure | |
| DSC system | | |
| F500 | DSC failure | DSC stops due to servo failure.<br>(Startup, focus failure, etc.) |
| F501 | DSC not Ready failure | Communication failure between DSC and system computer<br>(No communication because DSC does not move) |
| F502 | DSC Time out failure | See F500. |
| F503 | DSC communication failure | Communication failure (Result failure occurs after communication command is transmitted.) |
| F505 | DSC Attention Error | See F500. |
| F506 | Invalid media | Disc is placed upside down; TOC is unreadable or invalid disc is inserted. |
| Disc Code | | |
| F103 | Ilegal highlight position | Disc standard is possibly illegal when highlight is displayed. |
| IIC Error | | |
| F4FF | Forced initialization failure (Time out) | |
| F880 | Unsuitable task number | When a message arrives from not existing task |
| F890 | A message is sent during AV task transmission | During transmission of a message to AV task |
| F891 | Unable to transmit a message to AV task | When transmission of a message to AV task starts |
| F893 | FROM altered | |
| F894 | EEPROM failure | |
| F8A0 | Unsuitable message command | When transmission of a message to AV task starts |

## 10.5. Error Codes Stored During No Play

| Error Code | Meaning | System Computer Item | Setting Task | Internal error in system computer |
|---|---|---|---|---|
| F0BF | 6) Unable to replay due to physical layer identification failure | PCND_NOPLAY_PHYSICAL 0x50 | DriveManager | 0xD0BF |
| F0C0 | 8) DVD: Unable to replay due to no DVD Video/Audio/VR | PCND_NOPLAY_VIDEO 0x70 | DiscManager | 0xD0C0 |
| F0C1 | 9) DVD: Prohibited due to illegal regional code | PCND_NOPLAY_RCD 0x80 | DiscManager | 0xD0C1 |
| F0C2 | A) DVD: No replay due to PAL system | PCND_NOPLAY_PAL 0x90 | DiscManager | 0xD0C2 |

| Error Code | Meaning | System Computer Item | Setting Task | Internal error in system computer |
|---|---|---|---|---|
| F0C3 | B) DVD: All title replay prohibited in parental setting | PCND_NOPLAY_PTL 0xA0 | DiscManager | 0xD0C3 |
| F0C4 | C) VCD: Prohibited due to PHOTO CD format | PCND_NOPLAY_PHOTOCD 0xB0 | DiscManager | 0xD0C4 |
| F0C5 | D) VCD/CD: Prohibited due to CD-ROM without CD-DA | PCND_NOPLAY_CDROM 0xC0 | DiscManager | 0xD0C5 |

## 10.6. Mode Table 2

Following modes are available with combinations of the pressed buttons on the player and on the remote controller unit.

| Item | Operational Condition and Key Function | Details | Display | To Exit Mode |
|---|---|---|---|---|
| Jitter display | While the player is stopped and no disc is inserted, press and hold down the ■ button on the player and the number button, "5" on the remote controller unit. | Jitter display<br>Measures and displays jitter. Measurement is repeated every second. Read error counter starts at 0 at the mode setting, and increased by one as data read fails at target block. A small defect is allowed to correct by retry. Any possibility is counted as one increment. Repetitive errors after retry increase by two levels or more. | J*1 xxx*2 _yyy*3 _zz*4<br><br>*1 : Jitter display mode<br>*2 : Jitter measurement value<br>*3 : Read error counter<br>*4 : Focus driving value<br><br>Values are shown to one decimal place in the decimal digit.Focus driving value is displayed in the hexadecimal digit. | Press the STOP or OPEN button. |
| Error code display | While the player is stopped and no disc is inserted, press and hold down the ■ button on the player and the number button, "0" on the remote controller unit. | Error code display<br>Displays the latest error code stored in EEPROM. | DVDnn_F---<br>*nn: Error history<br>*--: Error number<br>DVD 01 FOBF | Press the OPEN button. |
| Measurement of laser current electricity initialization value | While the player is stopped and no disc is inserted, press and hold down the ■ button on the player and the ❚❚ button on the remote controller unit. | Measurement of laser current electricity initialization value<br>Memorizes each initialization value of DVD and CD in EEPROM. | LDO*1 _013*2 _032*3<br><br>*1 : Laser current electricity measurement mode<br>*2 : DVD current electricity value<br>*3 : CD current electricity value<br><br>Values are shown in the decimal digit. The above example indicates that the current electricity initialization value is 13mA at DVD laser and 32mA at CD laser when laser is turned on. | Automatically exits the mode after five seconds. |
| Measurement of DVD laser current electricity | While the player is stopped and no disc is inserted, press and hold down the ■ button on the player and the DISPLAY button on the remote controller unit. | Measurement of DVD laser current electricity<br>Measures DVD laser current electricity and displays the result together with the initialization value stored in EEPROM. After measurement, DVD laser is lit till the power is turned off (or goes off when the primary power is turned off). | LDD*1 _012*2 _014*3<br><br>*1 : DVD laser current electricity measurement mode<br>*2 : Current electricity initialization value stored in EEPROM<br>*3 : Present value of current electricity<br><br>Values are shown in the decimal digit. The above example indicates that the current electricity initialization value is 12mA and its present value is 14mA. | Automatically exits the mode after five seconds. |
| ADSC internal RAM display | While the player is stopped and no disc is inserted, press and hold down the ■ button on the player and the number button "1" or "2" on the remote controller unit. | ADSC internal RAM display<br>Reads and displays the RAM value inside ADSC. The address is renewed when the CLEAR key is pressed so that the values at eleven points appear. | A*1 _FB0*2 _0000*3<br><br>*1 :ADSC internal RAM display mode<br>*2 : Address<br>*3 : RAM value at displayed address<br><br>Values are shown in the hexadecimal digit. The above example indicates that ADSC value at the address, FB0h is 0000h. | Press the STOP or OPEN button. |

| Item | Operational Condition and Key Function | Details | Display | To Exit Mode |
|---|---|---|---|---|
| Measurement of CD laser current electricity | While the player is stopped and no disc is inserted, press and hold down the ■ button on the player and the number button "3" on the remote controller unit. | Measurement of CD laser current electricity<br>Measures CD laser current electricity and displays the result together with the initialization value stored in EEPROM. After measurement, CD laser is lit till the power is turned off (or goes off when the primary power is turned off). | LDC*1 _032*2 _032*3<br><br>*1 : CD laser current electricity measurement mode<br>*2 : Current electricity initialization value stored in EEPROM<br>*3 : Present value of current electricity<br><br>Values are shown in the decimal digit. The above example indicates the current electricity initialization value is 28mA and its present value is 26mA when laser is turned on. | Automatically exits the mode after five seconds. |
| User initialization | While the player is stopped and no disc is inserted, press and hold down the ■ button on the player and the number button ≧10 on the remote controller unit. | User initialization<br>The user setting recovers the factory setting. | "INITIALIZED" | - |
| Region display | While the player is stopped and no disc is inserted, press and hold down the ■ button on the player and the number button, "6" on the remote controller unit. | Region display | [srrrxxyzzzz]<br><br>s : Panecon model type<br>rrr : Panecon release number<br>x : Syscon generation (45)<br>y: Syscon model type<br>zzz: Syscon release number | Automatically exits the mode after five seconds. |
| Firmware version display | While the player is stopped and no disc is inserted, press and hold down the ■ button on the player and the number button, "7" on the remote controller unit. | Firmware version display | rrr*1 _xx*2 y*3 zzz*4<br><br>*1 : Panel computer release number<br>*2 : System computer generation<br>*3 : System computer model type<br>*4 : System computer release number | Automatically exits the mode after five seconds. |
| Region and firmware display | While the player is stopped and no disc is inserted, press and hold down the ■ button on the player and the number button, "8" on the remote controller unit. | Region and firmware version display | _r*1 __xx*2 y*3 zzz*4<br><br>*1 : Region number<br>*2 : System computer generation<br>*3 : System computer model type<br>*4 : System computer release number | Automatically exits the mode after five seconds. |
| Laser use time | While the player is stopped and no disc is inserted, press and hold down the ■ button on the player and the ▲ button on the remote controller unit. | Laser usage time<br>Measures each for DVD and CD respectively. | T1_1234_5678<br><br>The numbers in the left show usage time for DVD laser and those in the right for CD laser. The four-digit number is shown by the ten hours in the decimal digit. The number after 0000 is 9999. | Automatically exits the mode after five seconds. |
| Reset laser use time | While the usage time 1 is displayed, press and hold down the ■ button on the player and the ▼ button on the remote controller unit. | Laser usage time reset<br>Resets both for DVD and CD at once. | T1_0000_0000 | Automatically exits the mode after five seconds. |
| Spindle use time | While the player is stopped and no disc is inserted, press and hold down the ■ button on the player and the ► button on the remote controller unit. | Spindle motor usage time | T2_12345<br><br>The four-digit number is shown by the ten hours in the decimal digit. The number after 00000 is 99999. | Automatically exits the mode after five seconds. |
| Reset spindle use time | While the usage time 2 is displayed, press and hold down the ■ button on the player and the ◄ button on the remote controller unit. | Usage time 2 reset<br>Spindle motor usage time | T2_00000 | Automatically exits the mode after five seconds. |

| Item | Operational Condition and Key Function | Details | Display | To Exit Mode |
|---|---|---|---|---|
| Communication error display | While the player is stopped and no disc is inserted, press and hold down the ■ button on the player and the MENU button on the remote controller unit. | Displays frequency of communication errors between system computer firm IC and mechanical computer IC during DVD module. | ERR_00/30 | Automatically exits the mode after five seconds. |

## 10.7. Tray Lock Function

### 10.7.1. Setting

- **Disc Lock Function**
  1. With the SELECTOR on DVD/CD and POWER ON, hold down the [■ STOP] KEY on the main unit, and then press the [POWER] KEY on the remote control for 3 seconds to enter to Lock mode A.[_ _ _LOCKED_] will be displayed for 3 seconds, and then current disc will begin playing.
  2. In Lock mode A, the following key is disabled.

     [OPEN/CLOSE]
- **Operation Lock Function**
  1. With the SELECTOR on DVD/CD and POWER ON, hold down the [CD PLAY] KEY on the main unit, and then press the [POWER] KEY on the remote control for 3 seconds to enter Lock mode B.

     [_ _ _ LOCKED_] will be displayed for 3 seconds, and the current disc will begin playing.
  2. Lock mode B primarily controls the selector and disc operations, and disenables for the following keys.

  **Note:**

  OPEN/CLOSE ⏏ button are invalid and the player displays "___LOCKED_" while the lock function mode is entered.
- **Prohibiting operation of selector and disk**
  1. Select the DVD/CD function.
  2. Press and hold down the ▶ button on the player and the power button on the remote controller unit for at least three seconds. (The message, "___LOCKED_" appears when the function is activated.)

  **Note:**

  The following buttons are invalid and the player displays "___LOCKED_" while the lock function mode is entered.

Main unit: PLAY, PAUSE II, STOP ■, ⏏OPEN/CLOSE, ∨SKIP∧, DISC EXCHANGE, ⏮/REVERSE, ⏭/FORWARD

Remote control: PLAY MODE, CANCEL, PLAY, MENU, TOP MENU, ENTER

## 10.8. Things to Do After Repair

Follow the procedure described below after repair.

1. While the power is on, press the ⏏ button to close the tray.
2. Press the power button to turn off the power.
3. Unplug the power cable.

**Note:**

It is prohibited to unplug the power cable while the tray is opened and to close the tray manually.

# 11 Cautions To Be Taken During Servicing

## 11.1. Recovery after the dvd player is repaired

- When Flash ROM or module(2) P.C.B. is replaced, carry out the recovery processing to optimize the drive. Playback the recovery disc to process the recovery automatically.
- Recovery disc (Product number=RFKZD03R004)
- Performing recovery

1. Load the recovery disc (Product number: RFKZD03R004) to the player and run it.
2. Recovery is performed automatically. When it is finished, a message appears on the screen.
3. Remove the recovery disc.
4. Turn off the power.

**Note:**

This unit requires no initialization process carried out after the traditional DVD players were repaired. When the recovery measures are taken, the customer setting will return to the factory setting as same as the procedure described in item "Initialization" in 9.6 is carried out. Write down the contents of the setting before recovery processing, and reset the player.

## 11.2. DVD Player Firmware Version Upgrade Process

Firmware of DVD player may upgrade to conform to improvement of its performance and quality including operational range, playability of non-standardized discs, etc. The version upgrade disc contains the recovery function, and the recovery disc is not necessary.

**Note:**

Version upgrade process cannot be complete if the AC power is cut off due to power failure and other occasions during the process. If this occurs, replace FLASH ROM and restart version upgrade. Version upgrade disc number is informed when ordered.

## 11.3. Firmware Version Upgrade Process by Using Disc and Recovery Process

- Recovery process
- Firmware version upgrade process

Both of the above procedures automatically start when the recovery disc is replayed.General CD-R disc allows version upgrade process and recovery process, making version upgrade through disc simple.
Recovery process: Optimization process of player after replacement of FLASH ROM, EEPROM, or module circuit board
Version upgrade process: Renewal of firmware for improvement of operational range and performance

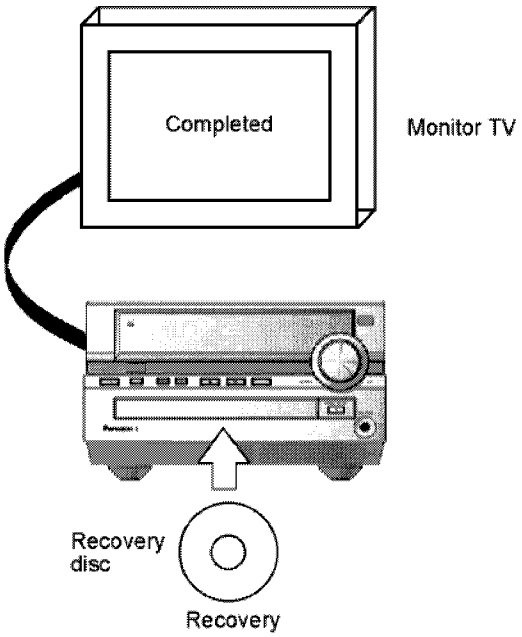


### 11.3.1. Self-Diagnosis Function

- Total usage time display (spindle motor, DVD/CD laser)
- ADSC internal RAM display
- Others: Last error count.....20 items

Efficiency of failure diagnosis is expected to improve by using the above functions together with the repair process.

**[Purpose of Use]**

Total usage time display: used for estimating a failure due to exhausted spindle motor, laser, or other parts.

ADSC internal RAM display: used for deciding servo system failure according to servo learning values.

# 11.4. Using Recovery Disc

## 11.4.1. Recovery Process

1. Insert the recovery disc (RFKZD03R004) to the player to replay.
2. The recovery process automatically starts, and a message of completion prompts on the screen.
3. Remove the disc.
4. Turn off the power.

## 11.4.2. Version Upgrade Process

1. Insert the recovery disc to the player to replay.
2. The version of player is automatically checked and prompts if necessary.
3. Select version upgrade process using the cursor keys on the remote controller unit. (Select YES or NO)
4. a. If YES is selected, the process starts.
   b. If NO is selected, only the recovery process is applied.
5. a. When the version upgrade process is complete, a message of completion appears on the screen. Remove the disc.
   b. Follow the instruction appearing on the screen, and remove the disc.
6. Turn off the power.

# 11.5. Total Usage Time Display

1. Details of Operation/Display

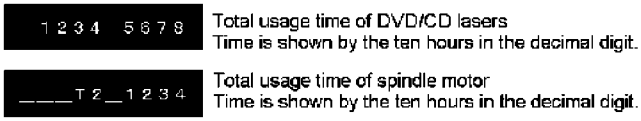


Keys for Operation:
Laser usage time: While the player is stopped and no disc is inserted, press both the ■ button on the player and the ▲ button on the remote controller unit.
Spindle motor usage time: While the player is stopped and no disc is inserted, press both the ■ button on the player and the ► button on the remote controller unit.

To reset the usage time, **while the usage time is displayed:**
Laser usage time: press both the ■ button on the player and the ▼ button on the remote controller unit.
Spindle motor usage time: press both the ■ button on the player and the ◄ button on the remote controller unit.

2. Purpose of Use

To obtain reference data of laser and spindle motor systems during failure diagnosis.
To check faulty parts during re-repair.

# 12 Operation Procedure

## Control reference guide

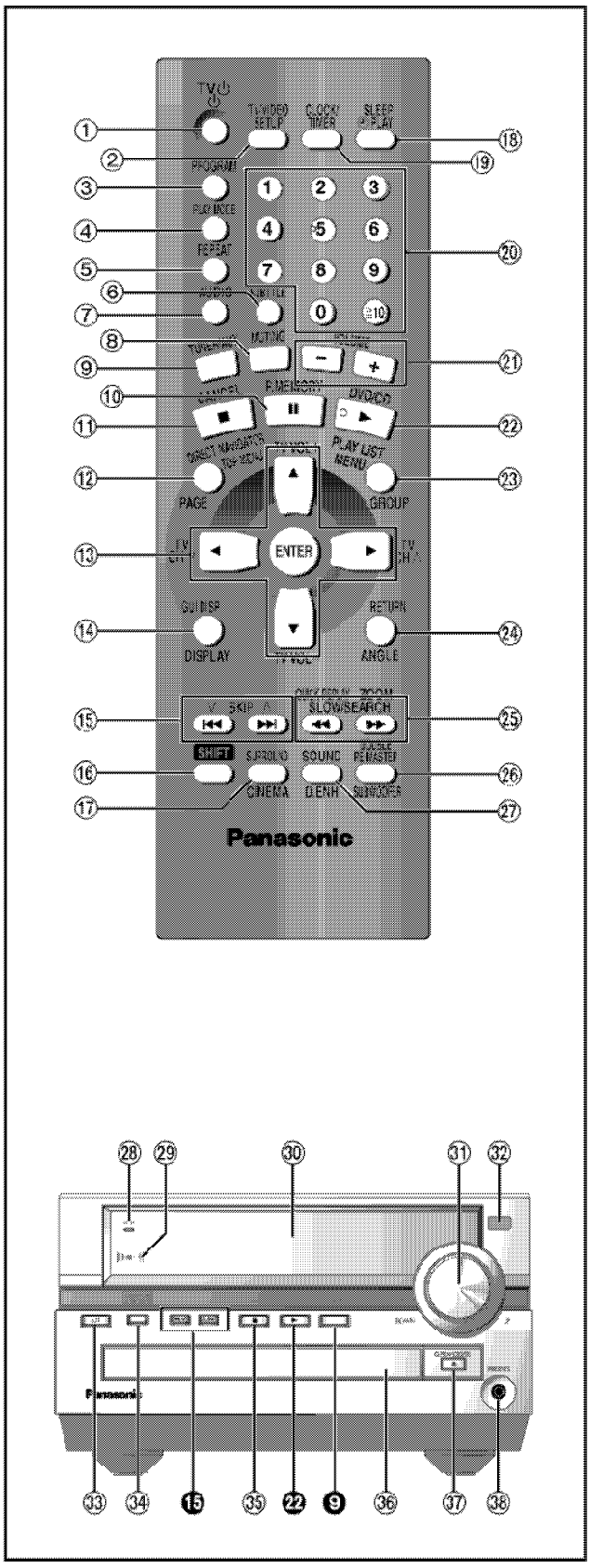


### Remote control

① **Standby/on, TV standby/on switch [⏻, TV⏻]**
② **Setup, TV/VIDEO button [SETUP, TV/VIDEO]**
③ **Program button [PROGRAM]**
④ **Play mode button [PLAY MODE]**
⑤ **Repeat button [REPEAT]**
⑥ **Subtitle button [SUBTITLE]**
⑦ **Audio button [AUDIO]**
⑧ **Muting button [MUTING]**
⑨ **Tuner/Aux button [TUNER/AUX]**
⑩ **Pause, Position memory button [❚❚, P.MEMORY]**
⑪ **Stop, Cancel button [■, CANCEL]**
⑫ **Direct navigator, Top menu, Page button [DIRECT NAVIGATOR, TOP MENU, PAGE]**
⑬ **Cursor buttons [▲, ▼, ◄, ►], Enter button [ENTER]**
These buttons have the following functions.
[▲, ▼]: TV volume buttons [TV VOL +,−]
[◄, ►]: TV channel buttons [TV CH ∨,∧]
⑭ **GUI display, Display button [GUI DISP, DISPLAY]**
⑮ **Skip, Preset channel buttons [|◄◄ ►►|, ∨ SKIP ∧]**
⑯ **Shift button [SHIFT]**

> To use functions labeled in orange:
> While pressing [SHIFT], press the corresponding button.

⑰ **Advanced Surround, Cinema button [SURROUND, CINEMA]**
⑱ **Play timer, Sleep timer button [⏻PLAY, SLEEP]**
⑲ **Clock/Timer button [CLOCK/TIMER]**
⑳ **Numbered buttons [1−9, 0, ≧10]**
㉑ **Volume buttons [−, +, VOLUME]**
㉒ **Play button [► DVD/CD]**
㉓ **Play list, Menu, Group button [PLAY LIST, MENU, GROUP]**
㉔ **Return, Angle button [RETURN, ANGLE]**
㉕ **Slow/search, Tuning buttons [◄◄, ►► SLOW/SEARCH]**
These buttons have the following functions.
[◄◄]: Quick replay button [QUICK REPLAY]
[►►]: Zoom button [ZOOM]
㉖ **Double re-master, Subwoofer button [DOUBLE RE-MASTER, SUBWOOFER]**
㉗ **Sound, Dialogue enhancer button [SOUND, D.ENH]**

### Main unit

Buttons ❾, ⓯ and ㉒ function the same as the controls on the remote control.

㉘ **AC supply indicator [AC IN]**
This indicator lights when the unit is connected to the AC mains supply.
㉙ **Advanced Surround indicator**
㉚ **Display**
㉛ **Volume control [VOLUME, DOWN, UP]**
㉜ **Remote control signal sensor**
㉝ **Standby/on switch [⏻/I]**
Press to switch the unit from on to standby mode or vice versa. In standby mode, the unit is still consuming a small amount of power.
㉞ **Advanced Surround button [ADVANCED SURROUND]**
㉟ **Stop, Demo button [■, –DEMO]**
㊱ **Disc tray**
㊲ **Open/close button [⏏ OPEN/CLOSE]**
㊳ **Headphone jack [PHONES]**

# 13 Disc information

## ■ Discs that can be played

| Disc type | Logo | Indication used in instructions |
|---|---|---|
| DVD-RAM | DVD RAM RAM4.7 | RAM |
| DVD-Audio | DVD AUDIO | DVD-A |
| DVD-Video | DVD VIDEO DVD VIDEO | DVD-V |
| DVD-R | DVD R R4.7 | |
| Video CD | COMPACT disc DIGITAL VIDEO COMPACT disc SUPER VIDEO | VCD Including SVCD (conforming to IEC62107) |
| CD | COMPACT disc DIGITAL AUDIO COMPACT disc DIGITAL AUDIO TEXT | CD Including CD text |
| CD-R/RW | — | WMA MP3 JPEG |

- Multiple-channel signals are down-mixed to stereo (2-channel). (To enjoy multi-channel surround sound ➡ page 32)
- Use discs with the above logos and that conform to specifications. The unit cannot play other discs correctly.
- Do not use irregularly shaped discs (e.g. heart-shaped), as these can damage the unit.

## ■ Discs that cannot be played

DVD-ROM, CD-ROM, CDV, CD-G, +RW, DVD-RW, CVD, SACD, Divx Video Discs, Photo CD and "Chaoji VCD" available on the market including CVD, DVCD and SVCD that do not conform to IEC62107.

## ■ Disc structure

Disc structure and the labels given to the items on discs depend on the disc type.

**Track:** the smallest division on DVD-Audio, CDs, and Video CDs, or a single WMA/MP3 file.
**Chapter:** the smallest division on DVD-Video.
**Group:** collections of tracks on DVD-Audio and equivalent to folders or albums on data discs.
**Title:** the largest division on DVD-Video, usually an entire movie.
**Program:** the division on DVD-RAM equivalent to a single recording.
**Picture:** a single JPEG file.
**Play list:** the largest grouping on a HighMAT disc, or a group of scenes on DVD-RAM
**Scene:** DVD-RAM program sections specified and grouped into play lists on a DVD video recorder.
**Content:** covers tracks and pictures on HighMAT discs.

## ■ Built-in decoders

This unit has Dolby Digital and DTS decoders so you can enjoy these systems in stereo without connecting a separate decoder.

### Playing DVDs and Video CDs

The producer of these discs can control how they are played so you may not always be able to control play as described in these operating instructions (for example if the play time is not displayed or if a Video CD has menus). Read the disc's instructions carefully.

## ■ HighMAT discs

This unit is compatible with HighMAT discs containing WMA, MP3, and/or JPEG files.

## ■ CD-R and CD-RW discs

This unit can play CD-R/RW (audio recording disc) recorded with CD-DA, video CD, SVCD (conforming to IEC62107), WMA, MP3 or JPEG. Close the sessions or finalize the disc after recording.

## ■ DVD-R discs

Panasonic DVD-R recorded and finalized on a Panasonic DVD video recorder are played as DVD-Video on this unit.

## ■ DVD-RAM discs

DVD-RAM discs must meet the following conditions for this unit to be able to play them.

| | |
|---|---|
| Type | • Non-cartridge discs<br>• Discs that can be removed from their cartridges (TYPE 2 and 4) |
| Capacity | • 12 cm 9.4 GB (double-sided) and 4.7 GB (single-sided)<br>• 8 cm 2.8 GB (double-sided) |
| Recording format | Discs recorded with DVD video recorders, DVD video cameras, personal computers, etc., using Version 1.1 of the Video Recording Format (a unified video recording standard). |

- Remove TYPE 2 and 4 discs from their cartridges before use, then return them when you are finished, making sure that the labels of the disc and cartridge face the same way.
- Some parts of the disc, for example where one program ends and another begins, may not play smoothly.

**Note**

It may not be possible to play CD-R, CD-RW, DVD-R and DVD-RAM in all cases due to the type of disc or condition of the recording.

## ■ Video systems

This unit can play both the PAL and NTSC video systems. To view PAL or NTSC, however, your television must match the system used on the disc.
PAL discs cannot be correctly viewed on an NTSC television. NTSC can be correctly viewed on a PAL television by converting the video signal to PAL 60 (➡ page 30, Video—NTSC Disc Output).

## ■ To clean discs

**DVD-Audio, DVD-Video, Video CD, CD**

Wipe with a damp cloth and then wipe dry.

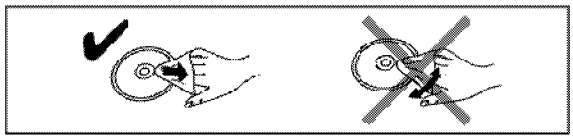

**DVD-RAM, DVD-R**

- Clean with an optional DVD-RAM/PD disc cleaner (LF-K200DCA1, where available).
- Never use cloths or cleaners for CDs etc.

## ■ Handling precautions

- Do not write on the label side with a ball-point pen or other writing instrument.
- Do not use record cleaning sprays, benzine, thinner, static electricity prevention liquids or any other solvent.
- Do not attach labels or stickers to discs. (Do not use discs with exposed adhesive from tape or left over peeled-off stickers.)
- Do not use scratch-proof protectors or covers.
- Do not use discs printed with label printers available on the market.

# 14 About HighMAT

## 14.1. What is HighMAT?

This word combines the abbreviations of Matsushita Electric Industrial Co., Ltd. and High Performance Media Access Technology, and is a trademark of Microsoft Corporation. The products with the HighMAT logo shown below are made according to the HighMAT standard.

HighMAT is a a format that allows users to save digital contents such as photographs, audio, and images on a CD. This gives consistency in the way of reading data when general consumer products (such as DVD players) and PCs are used, and thus, it is easy to operate for the user.

## 14.2. Why use HighMAT?

Up to now, there was no harmonized standard fro playing digital content stored in CD-ROM formats (including CD-R) on consumer products like DVD players.Therefore, we used to have probblems such as follow:

- There was no common play list or attached information on contents, which is called metadata.
- The data compression method differed according to the equipment.
- As the number of CD-ROMs recorded increased retrieved the contents became more difficult.
- Because display and operation methods were different depending on the equipment, the play order of the content on the same disc could change.

## 14.3. The advantages of using HighMAT

Applying the HighMAT standard will solve the following problems and will improve usability.

- It will create a common user interface for both PC and consumer products.

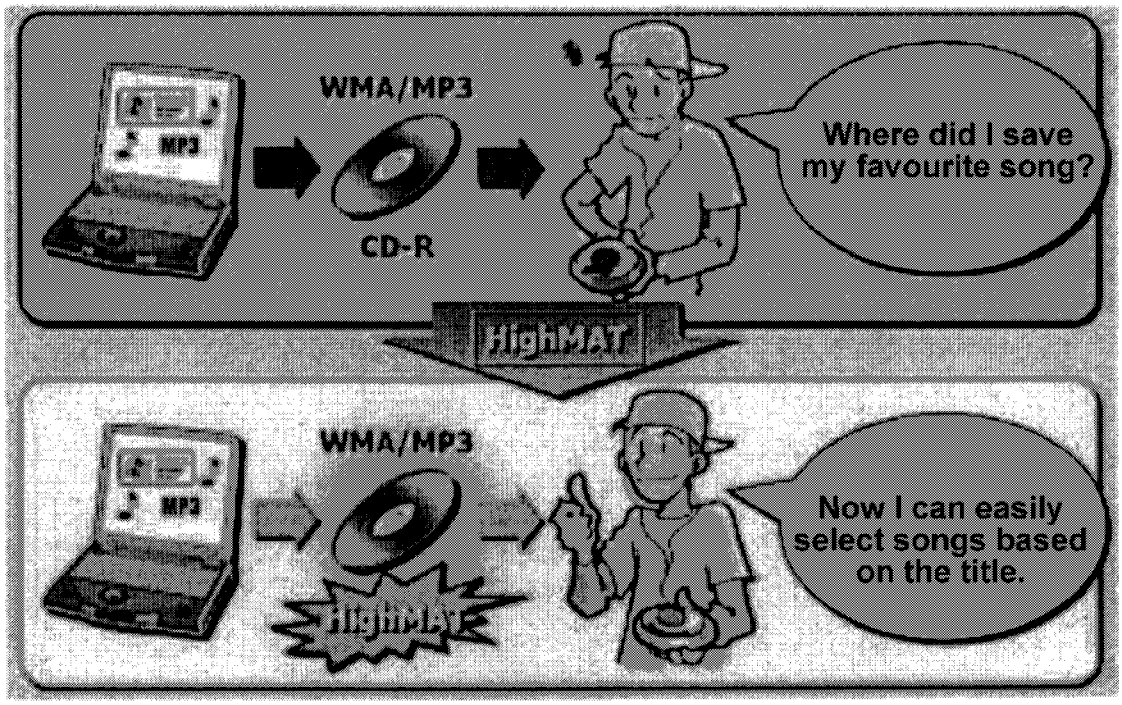


- Regardless of the types of consumer products, such as DVD players, portable CD players, car stereos, and mirco computers, a consistent way to pay for digital content will be created and it will make it easier to retrieve data.

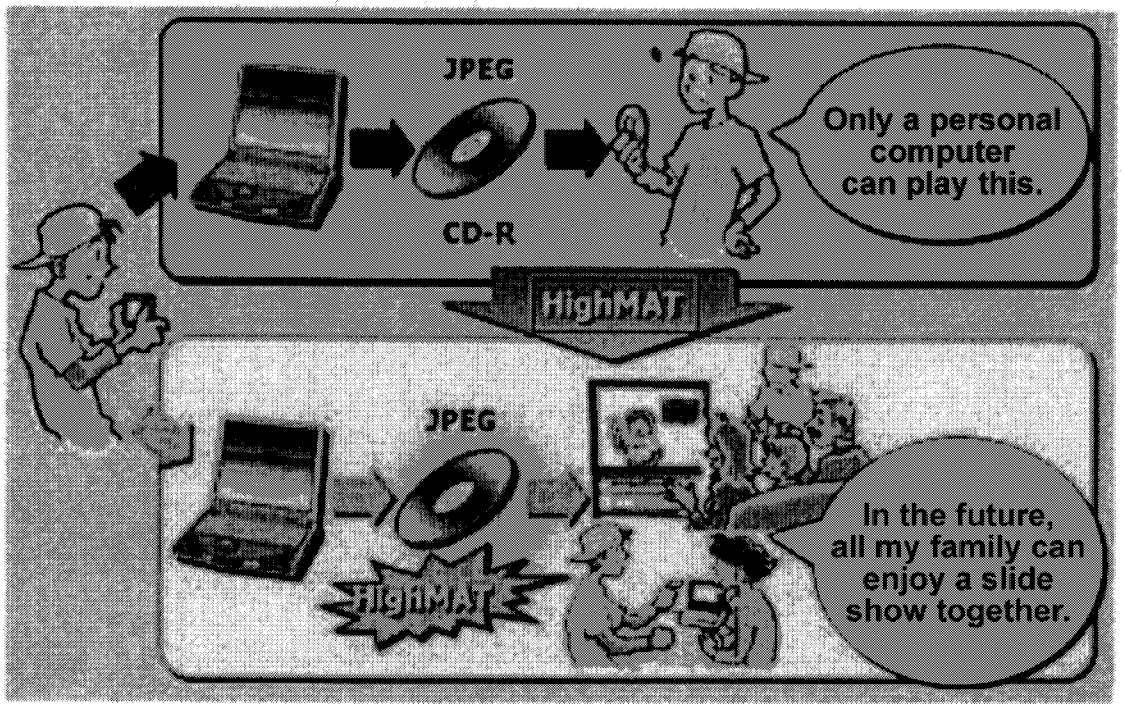


- You can also play digital content on the disc, which was created in accordance with the HighMAT format with a conventional CD-ROM player.

## 14.4. Outline of the HighMAT standard

1. Recording medium
   - CD-R/CD-RW
   - Supports ISO 9660 Level Expanded Joliet
   - For multiple session

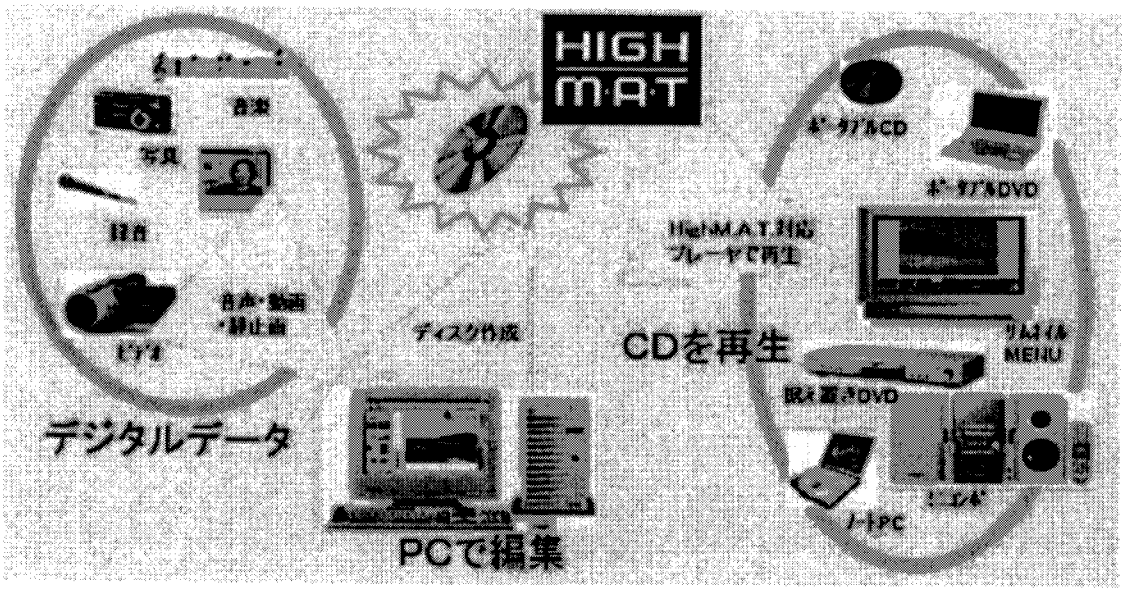


2. Support data format
   - Level 1 player: WMA, MP3 (MPEG-1 Audio Layer 3)
   - Level 2 player: WMA, MP3 (MPEG-1 Audio Layer 3), JPEG
   - Level 3 player: WMA, MP3 (MPEG-1 Audio Layer 3), JPEG, WMV, MPEG4 (optional)
3. Limitation of data format
   - WMA, MP3 (MPEG-1 Audio Layer 3) 64 kbps - 160.999 kbps, 44.1 KHz, stereo, fixed bit rate/ variable bit rate.
   - WMA, V2 and above, excluding Lossless/Voice/Pro

- JPEG: Max 6M pixel, Maximum file size: 3 MB

4. Limitations regarding the number of files on the media, etc.
   - Total number of audio files: Maximum 450
   - Total number of still picture files: Maximum 999
   - Total number of animation files: Maximum 200
   - Total number of directories: Maximum 400
   - Length of a file name: Maximum 108 characters (Unicode)
   - Total number of play lists: Maximum 200
   - Number of contents in the playlist: Maximum 900
5. Composition of HighMAT disc
   - Menu: Classified for the navigation of the HighMAT digital contents. When menu selected, its submenu or the play list will be displayed.
   - Play list: A list in which one or more digital contents are arranged in order
   - Group: Sub-divided group of a play list.
   - Digital Contents: Audio, still picture, and animation data.

# 15 Procedure for repairing the set

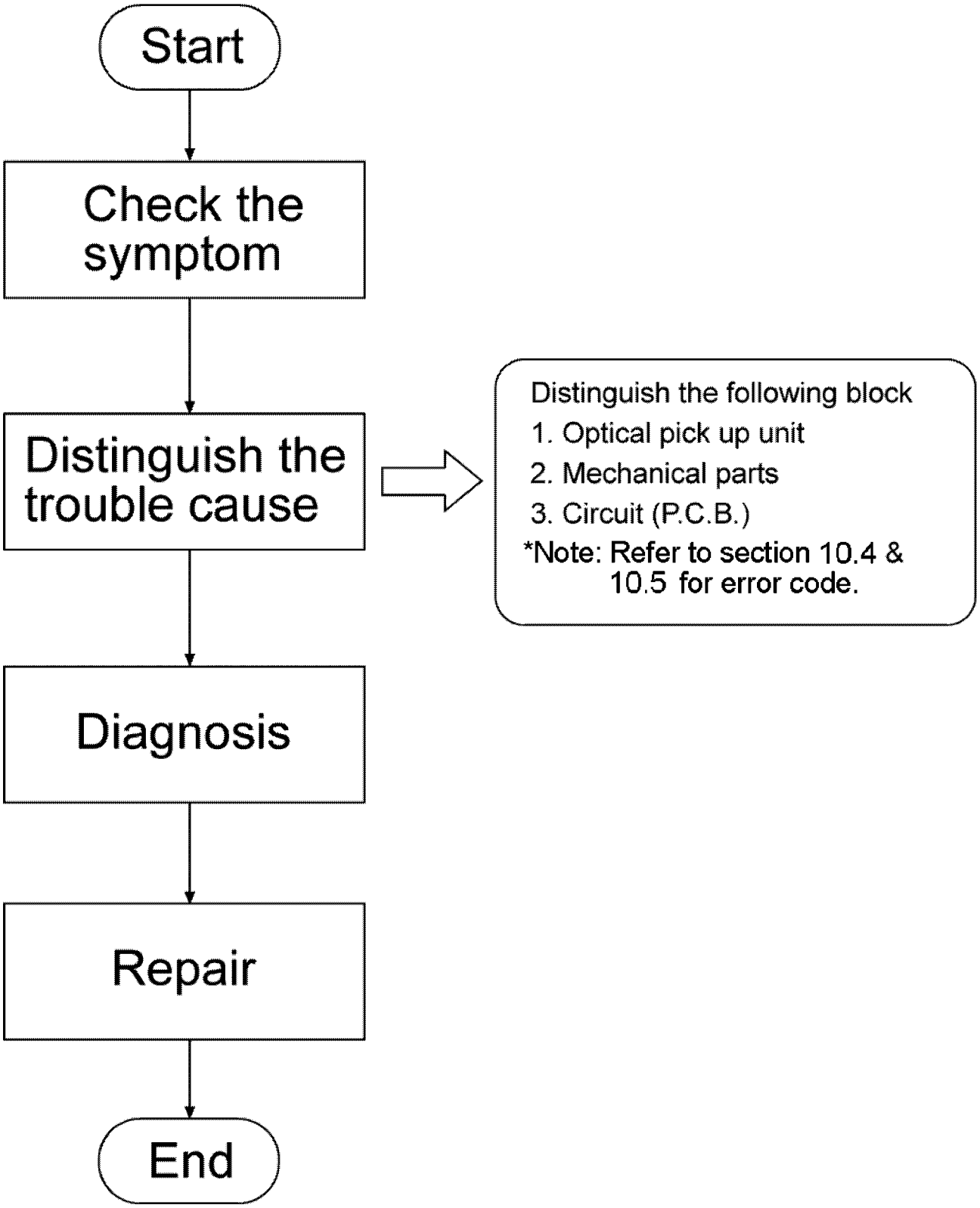

## 15.1. Distinguish the trouble cause

• Check flow

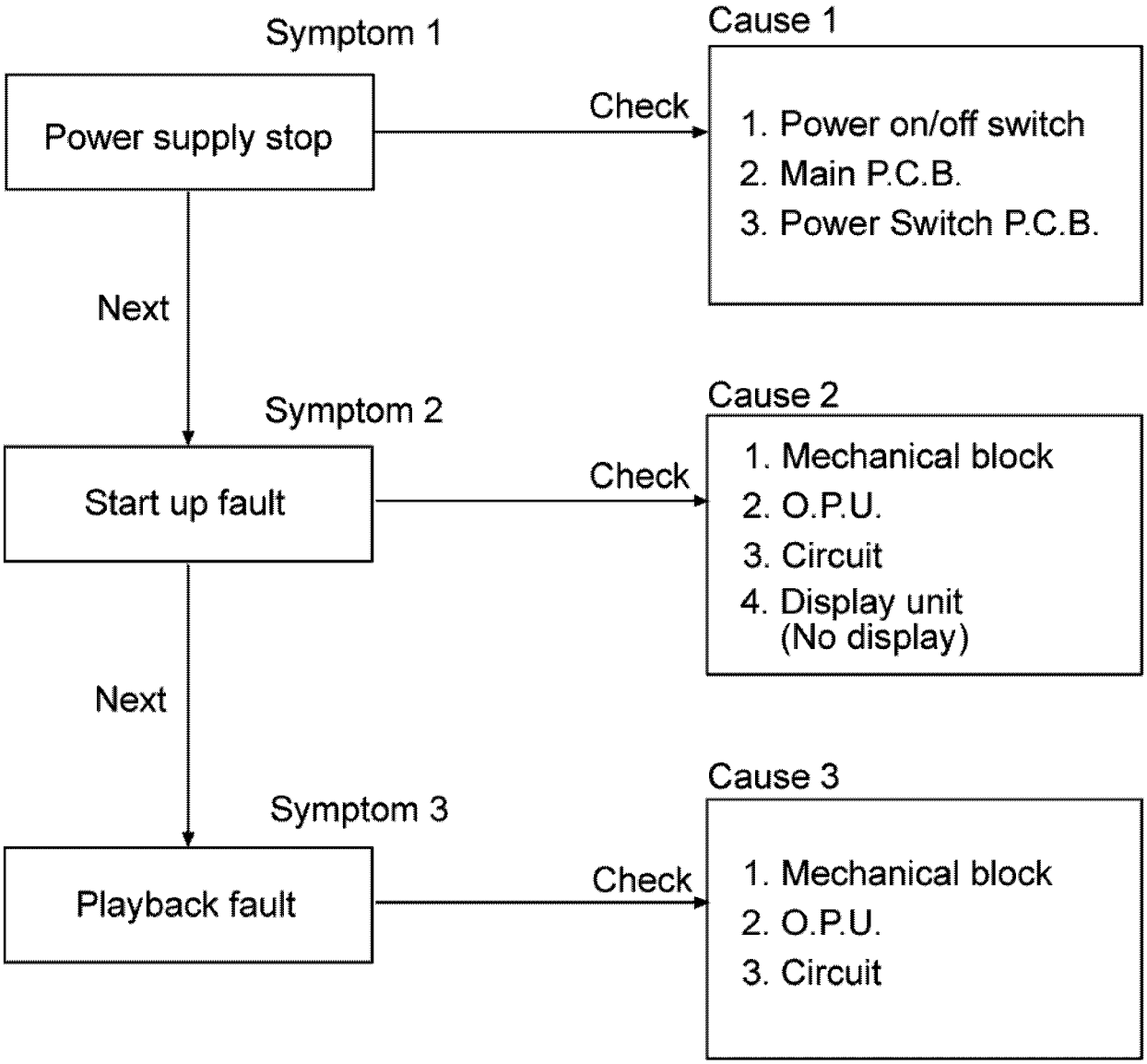


**How to distinguish the trouble**

1. View mechanical part if visual damage occurred.
   Confirm the movement of mechanical parts assembly (tray ass'y, loading mechanism ass'y, etc.).
2. Diagnose if Optical Pickup Unit is faulty (refer to diagnosis of Optical Pickup Unit).
3. If mechanism and OPU are OK, it is P.C.B.

| Cause 1 | Possible fault |
|---|---|
| 1. Power ON/OFF switch | Power switch (S605), AC inlet (JK500) |
| 2. Transformer P.C.B. | F1 (Fuse), T501, T502, FP501, FP502, RL501, D501, D586~D589 |
| 3. Power P.C.B. | IC501 |

| Cause 2 | Possible fault |
|---|---|
| 1. Mechanical block | Tray and loading mechanical block, traverse unit |
| 2. O.P.U. | Refer to the diagnosis of OPU |
| 3. Circuit | LD drive, servo (Traverse, Focus, Tracking)<br>Disc sensor<br>Signal processing (FORE, SODC, DV1 etc.) |

| Cause 3 | Possible fault |
|---|---|
| 1. Mechanical block | Traverse block (Tilt adjustment) |
| 2. O.P.U. | Refer to the diagnosis of OPU |
| 3. Circuit | Servo (Focus, tracking)<br>Signal processing (FORE, SODC, DV1 etc.) |

## 15.2. Diagnosis of Optical Pick-up Unit

Diagnosis Method
Diagnose the OPU by the following procedure

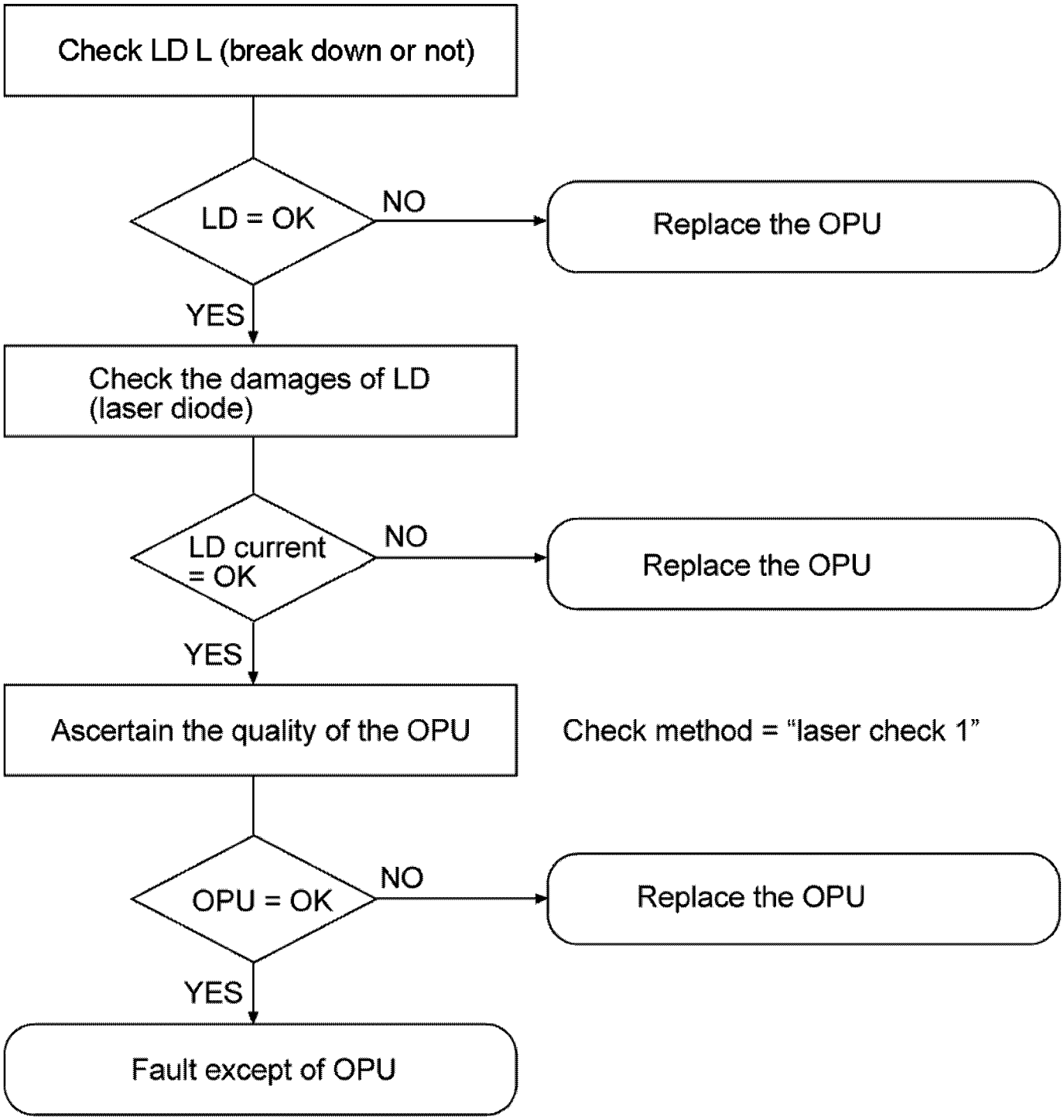


Note : When LD does not emit light after replacing the OPU, check the LD drive circuit in the module P.C.B.

**How to distinguish Laser destruction/damage**

Confirmation 1

Remove cover of mechanism block so that you will see the lens of optical pickup.

Confirm emission of laser at the moment when power switch is turned on.

If there is no laser emission, laser diode is faulty.

Confirmation 2

While holding “Pause” and “Open/Close” button, press “Display” button on the remote controller. Unit display laser current on FL.

From the reading of display, you can judge if laser diode is damaged or not.

Reading on the right side should be less than 70. If reading is more than 70, laser is damaged.

**How to confirm if Optical Pickup is OK**

Confirmation 1

1. Confirmation of jitter value with test disc. (Refer below for how to check jitter)
2. Lens cleaning.
3. Reconfirm jitter value.
4. Perform tile adjustment. (Refer to tilt adjustment)
5. Reconfirm jitter value. (To confirm jitter value, while pressing “Pause” and “Open/Close” button, press numeric “5” on remote controller.)

   Unit display jitter value on FL.

Confirmation 2

If servo is very unstable due to optical error and you cannot confirm jitter value, clean the lens and check appearance of pick up unit (cutting coil of actuator, etc), then check circuitry.

# 16 Disassembly and Main Component Replacement Procedures

**"ATTENTION SERVICER"**

Some chassis components may have sharp edges.

Be careful when disassembling and servicing.

1. **This section describes procedures for checking the operation of the major printed circuit boards and replacing the main components.**
2. **For assembly after operation checks or replacement, reverse the respective procedures.**
   **Special reassembly procedures are described only when required.**
3. **Select items from the following index when checks or replacement are required.**

**Contents**


- Checking for Main & ASP P.C.B.
- Disassembly for the DVD changer ass'y
  - Disassembly for the CD Lid
- Checking for Panel P.C.B.
- Checking for DVD Module (2) P.C.B.
- Checking for Video Out P.C.B., Power P.C.B. and Transformer P.C.B.
- Checking for Traverse Deck and Optical Pickup
  - How to secure the optical pickup
  - How to secure the traverse base

# 16.1. Checking for Main & ASP P.C.B.

**Step 1** Remove 2 screws each side and1 screw at rear panel.

**Step 2** Lift up top cabinet ass'y.

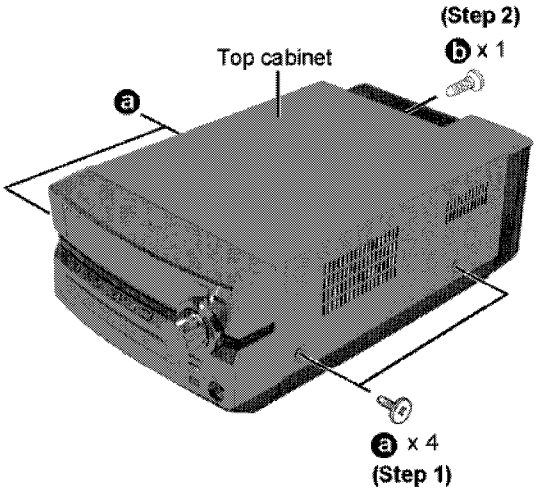


- **Checking the Main P.C.B. & ASP P.C.B. as shown below.**

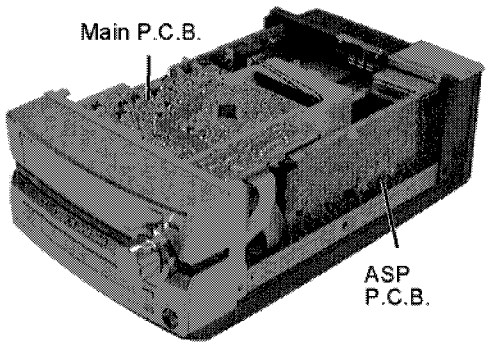


# 16.2. Disassembly for the DVD changer ass'y

- Follow the (Step 1) - (Step 2) of Item 16.1.

## 16.2.1. Disassembly for the CD Lid

- Follow the (Step 1) - (Step 2) of Item 16.1.

**When opening the disc tray automatically (Using Power Supply)**

**Step 1** Connect the AC power cord.

**Step 2** Press the POWER button to power up the main unit.

**Step 3** Press the OPEN/CLOSE button, the disc tray will be open automatically.

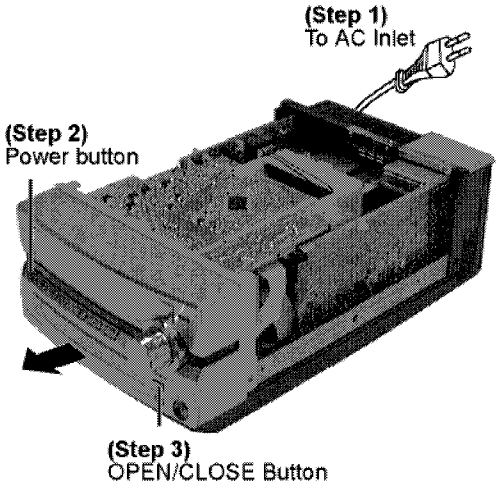


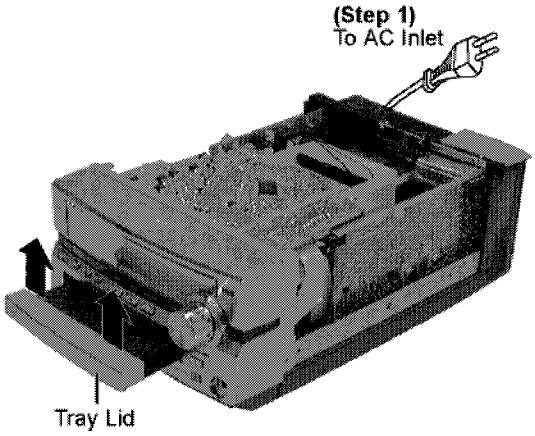


**Step 4** Push DVD Lid upward and remove the DVD Lid.

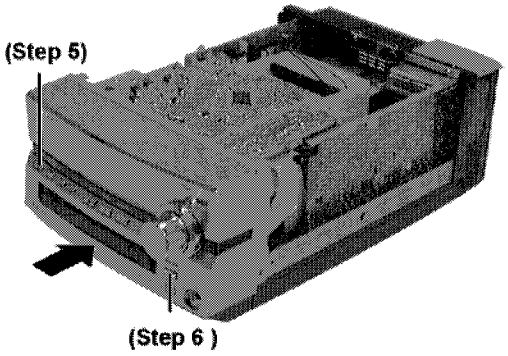


**Step 5** Press the POWER button to turn the power on.

**Step 6** Press the OPEN/CLOSE button, the disc tray will be close.

**[Open the disc tray manually (Using service tools)]**

**Step 1** Upset the unit as shown below.

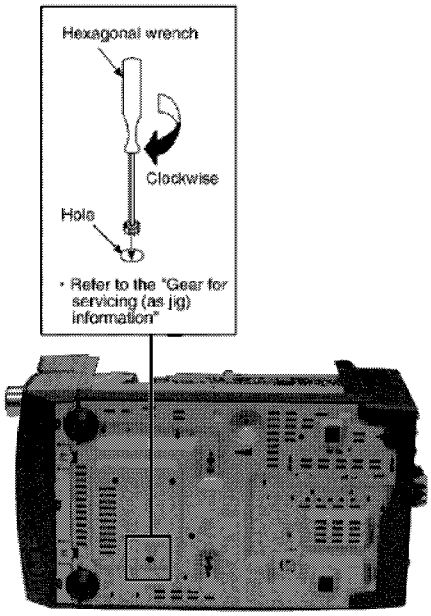


**Step 2** Insert the gear tool into the hole on the underside of bottom chasis and then rotate in the direction of arrow. The disc tray will be open.

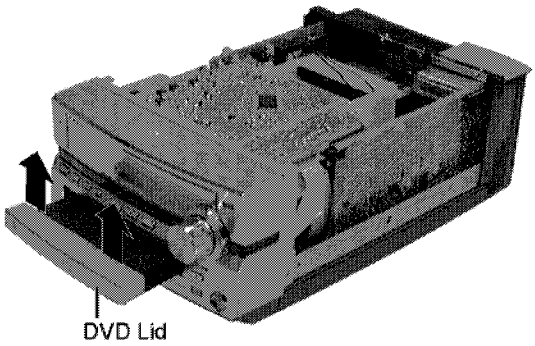


**Step 3** Push DVD Lid upward and remove the DVD Lid.

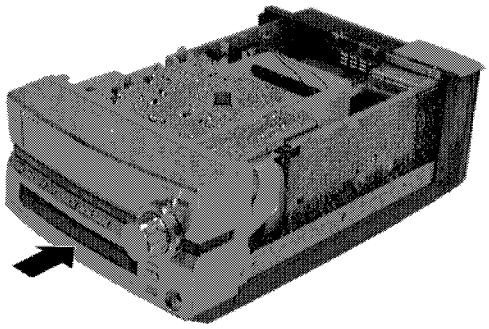

**Step 4** Push the disc tray backward as arrow shown.

## 16.3. Checking for Panel P.C.B.

- Follow the (Step 1) - (Step 2) of Item 16.1.
- Follow the (Step 1) - (Step 6) of Item 16.2.

**Step 1** Remove connectors CN202 & CN502.

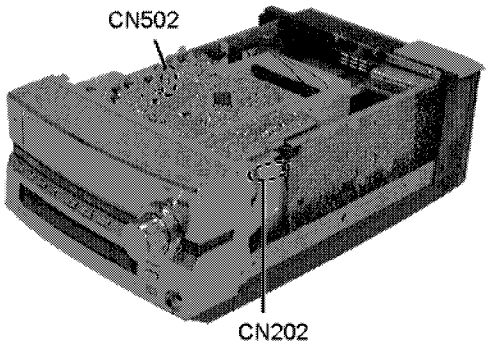


**Step 2** Upset the unit as shown below.

**Step 3** Release 4 claws.

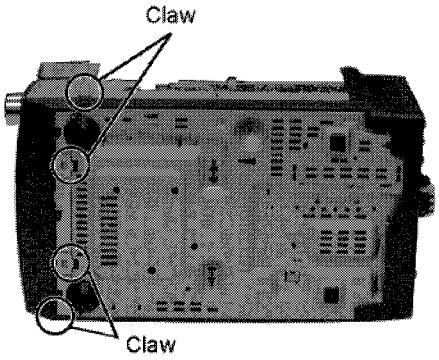


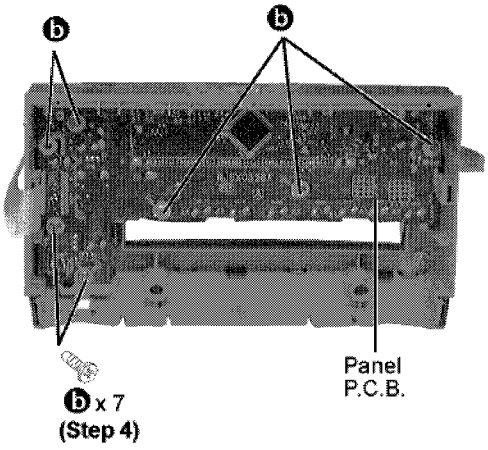


**Step 4** Remove 7 screws.

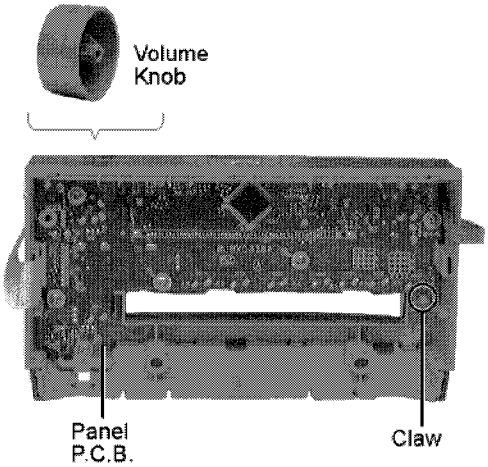


**Step 5** Pull out voume knob and the claw.

- **Service Position**

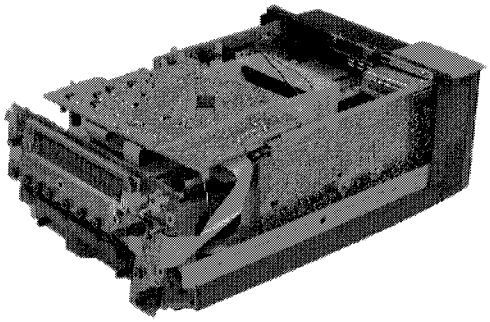

## 16.4. Checking for DVD Module (2) P.C.B.

- Follow the (Step 1) - (Step 2) of Item 16.1.
- Follow the (Step 1) - (Step 6) of Item 16.2.
- Follow the (Step 1) - (Step 5) of Item 16.3.

**Step 1** Remove 2 screws.

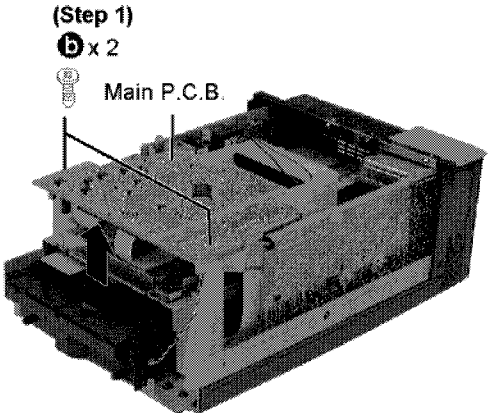


**Step 2** Lift up Main P.C.B as arrow shown.

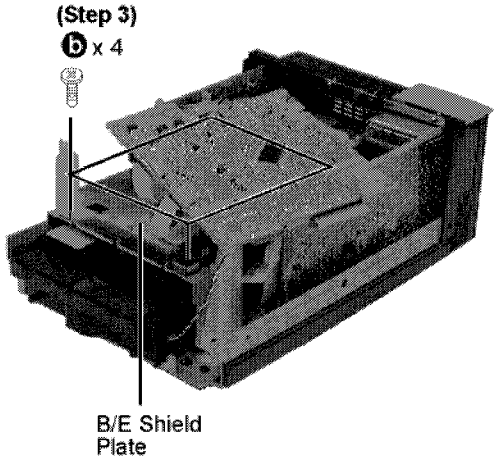


**Step 3** Remove 4 screws.Release the B/E shield plate.

- Checking of DVD Module (2) P.C.B. and Sensor P.C.B.

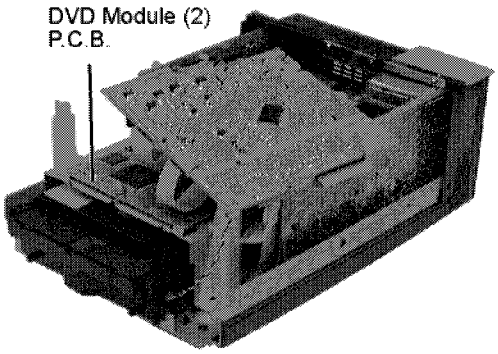


## 16.5. Checking for Video Out P.C.B. , Power P.C.B. and Transformer P.C.B.

- Follow the (Step 1) - (Step 2) of Item 16.1.
- Follow the (Step 1) - (Step 6) of Item 16.2.
- Follow the (Step 1) - (Step 5) of Item 16.3.
- Follow the (Step 1) - (Step 3) of Item 16.4.

**Step 1** Remove 11 screws.

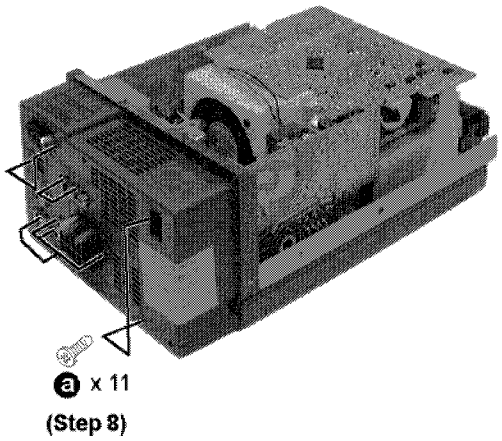


**Step 2** Remove the rear panel.

- Checking of Video Out P.C.B., Power P.C.B. & Transformer P.C.B.

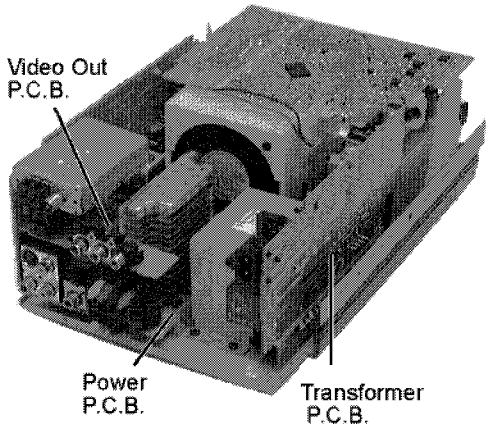


## 16.6. Checking for Traverse Deck and Optical Pickup

- Follow the (Step 1) - (Step 2) of Item 16.1.
- Follow the (Step 1) - (Step 6) of Item 16.2.
- Follow the (Step 1) - (Step 5) of Item 16.3.
- Follow the (Step 1) - (Step 3) of Item 16.4.
- Follow the (Step 1) - (Step 2) of Item 16.5.

**Step 1** Open the stoppers by hand and slide the hooks to remove the clamp plate unit.

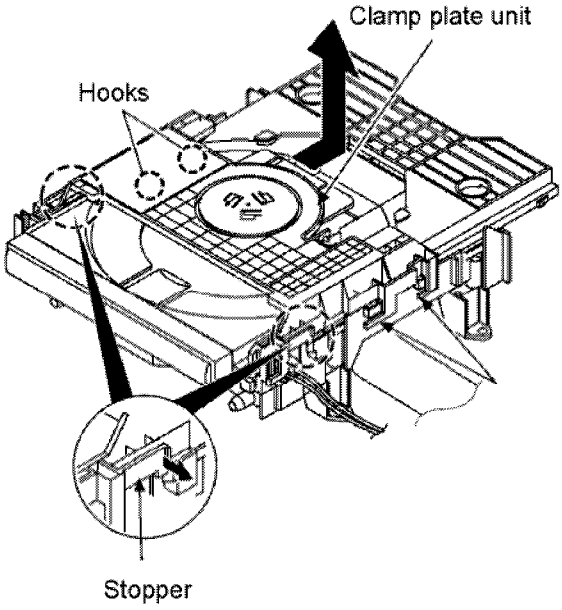


**[Caution]**

When the traverse deck (semi) is raised, lift up the fixed disc to detach the clamp plate unit due to attraction by clamper magnent.

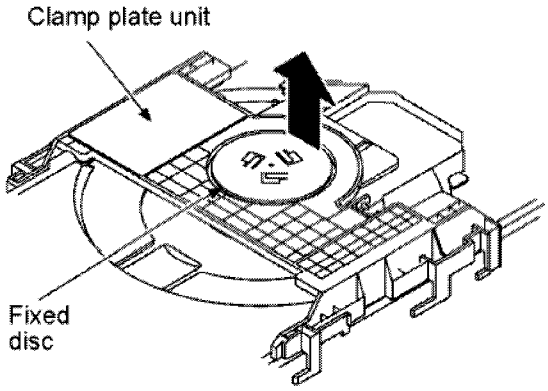


**Step 2** Detach the disc tray upwards.

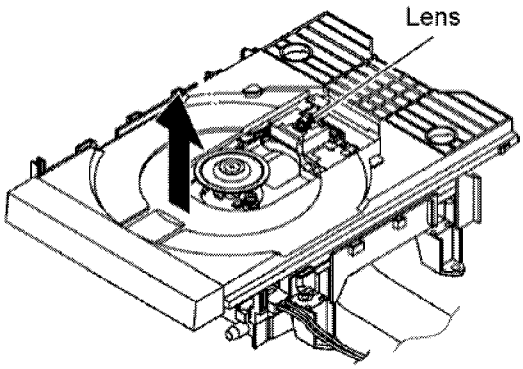


**[Caution]**

Please do not touch the optical pickup lens.

**Step 3** Remove the hooks and pull out the traverse base unit (semi).

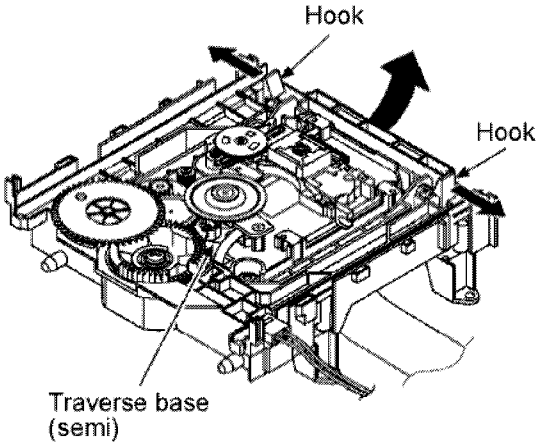


**Step 4** Detach the traverse base (semi).

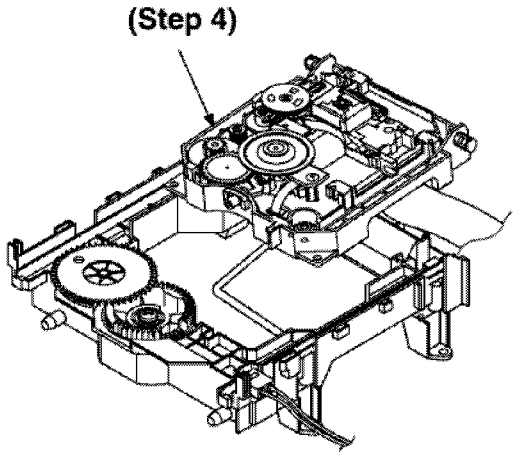


**Step 5** Open the hooks and remove the pins (two places).

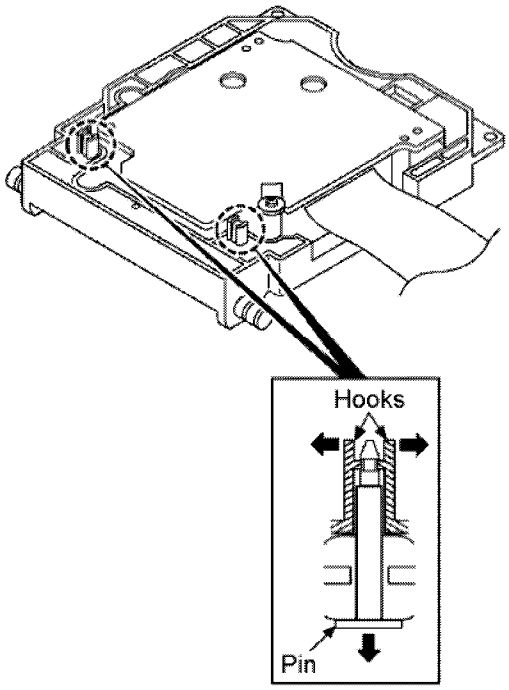


**Step 6** Remove hooks in two places and remove the traverse deck (semi).

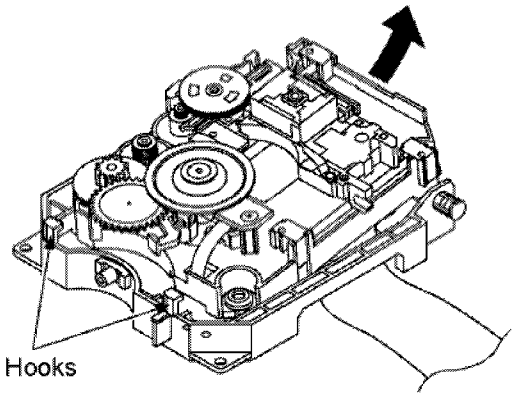


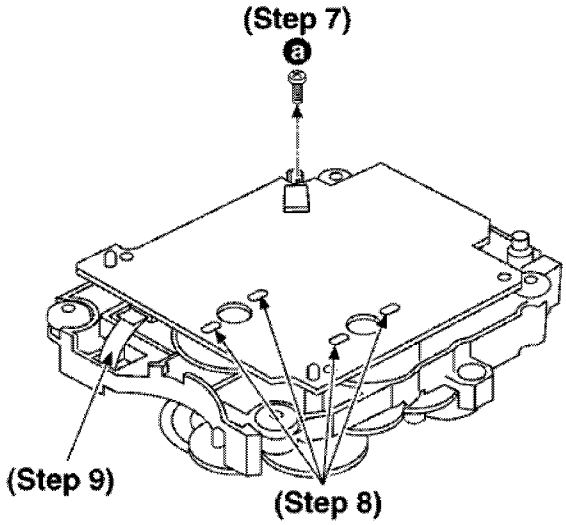


**Step 8** Remove the solder joints of the motor terminal (four places).

**Step 9** Pull out the FFC.

**Step 10** Turn over the DVD relay plate.

**Step 11** Remove the FFC from the connector.

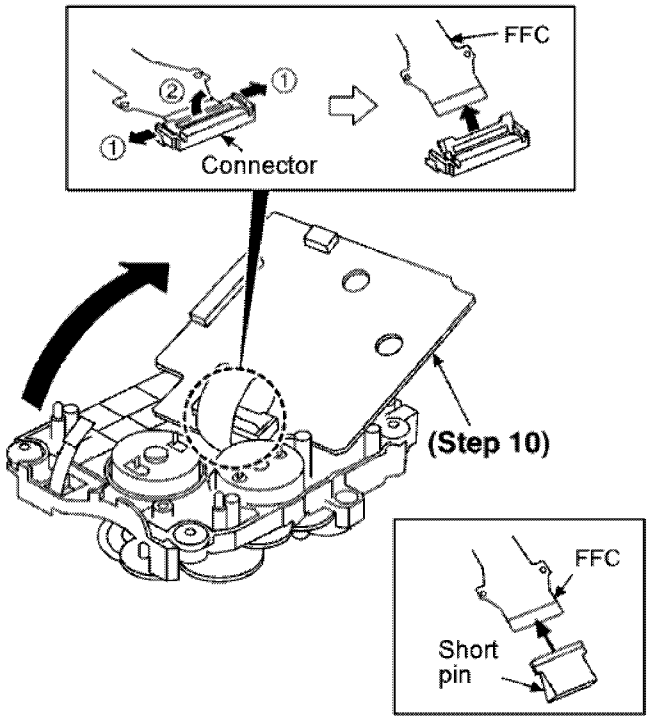


**[Caution]**

Immediate attach the short pin to the FFC terminal once the FFC is removed from the connector.

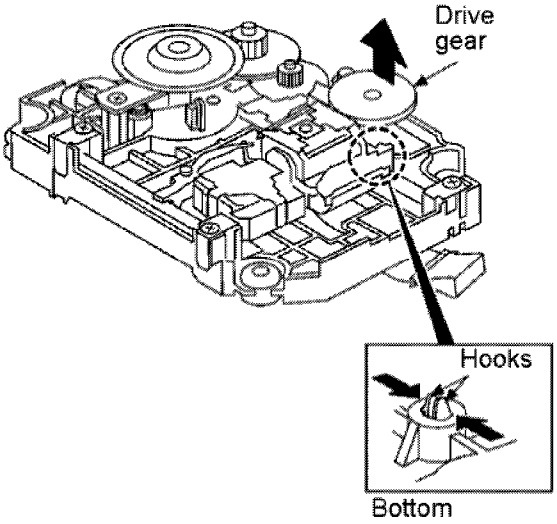


**Step 12** Remove the hooks and pull out the drive gear.

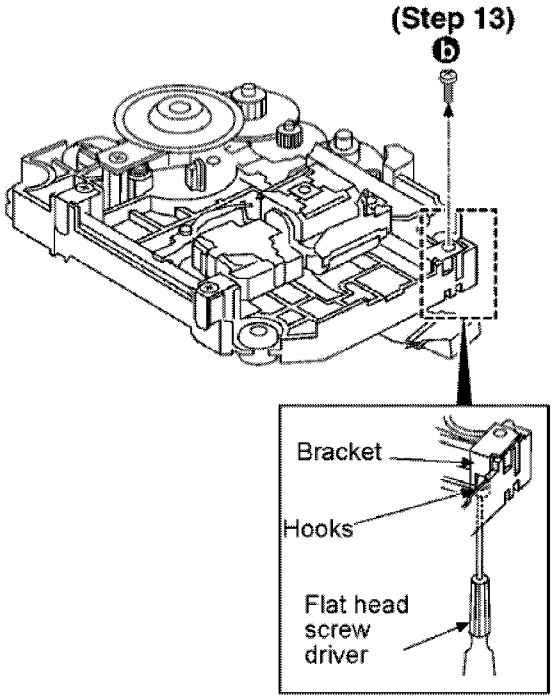


**Step 14** Release the hook, and detach the bracket.

**Step 15** Remove the spring.

**Step 16** Lift up the optical pickup (semi) and remove the guide shaft (1) from the guide (A).

**[Caution]**

Be careful not to lose the spring.

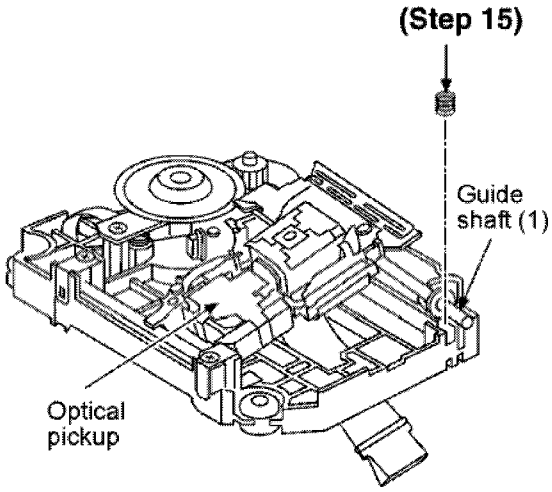


**Step 17** Remove the optical pickup.

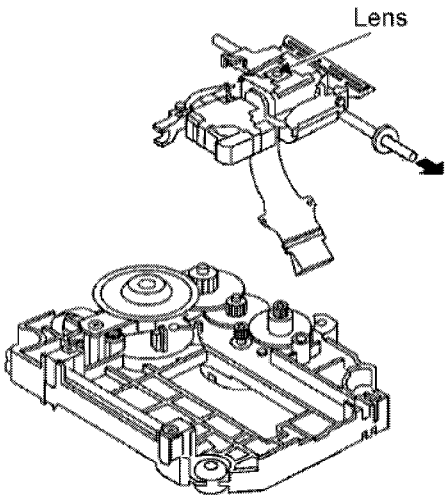


**Step 18** Pull out the guide shaft as arrow show.

**[Caution]**

1. Please do not apply vigorous pressure to the optical pickup because it has an extremely high precision structure.
2. Please do not touch the optical pickup lens

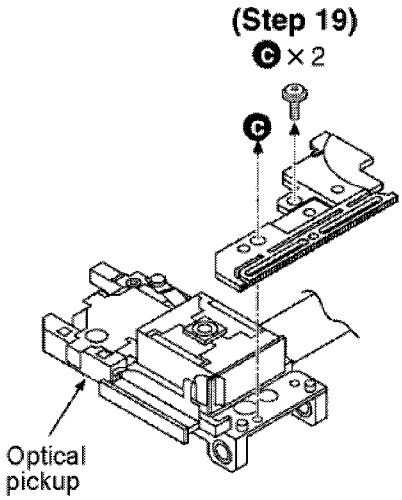


**Step 20** Remove the slide plate.

## 16.6.1. How to secure the optical pickup

**Step 1** Pass the FFC through the hole of the traverse chassis.

**Step 2** Hook the optical pickup guide on the guide shaft (2).

**Step 3** Secure the edge of the guide shaft into the hole of guide (B).

**Step 4** Secure the guide shaft (1) to guide (A).

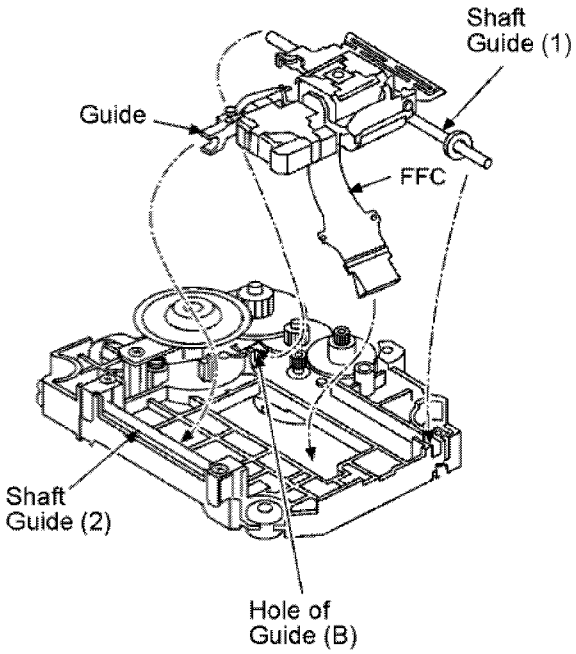


**Step 5** Secure the spring and the bracket.

**Step 6** Secure the bracket with the screw.

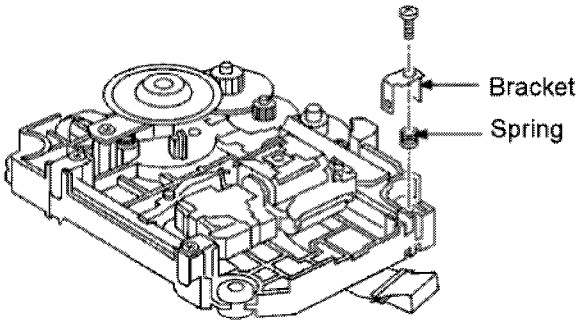


## 16.6.2. How to secure the traverse base

**Step 1** Check whether the TGR lever is at the position shown in the figure below.

**Step 2** Fully slide the optical pickup in the direction of the arrow.

**Step 3** Check whether the TGR lever moves in the direction of the arrow when the optical pickup is fully slide in the proper direction.

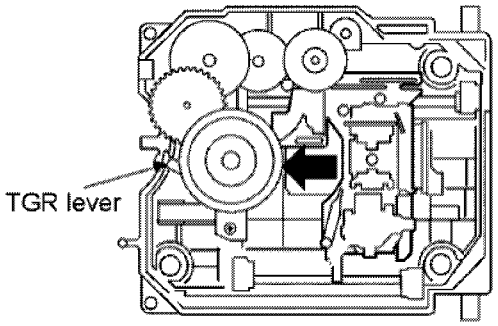


**Step 4** Mount the drive gear.

**[Caution]**

Preparation of the traverse base is completed.

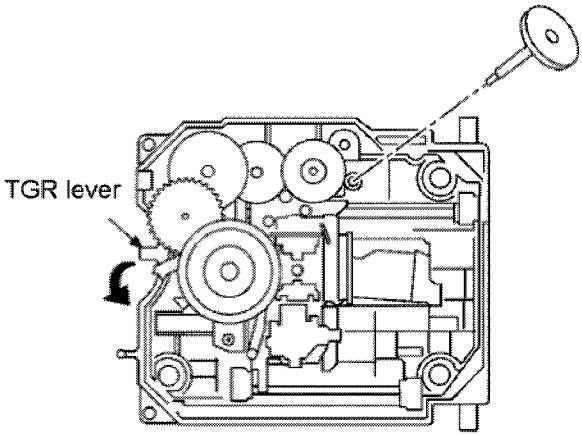


**Step 5** Align the holes of the drive gear and the mechanical chassis.

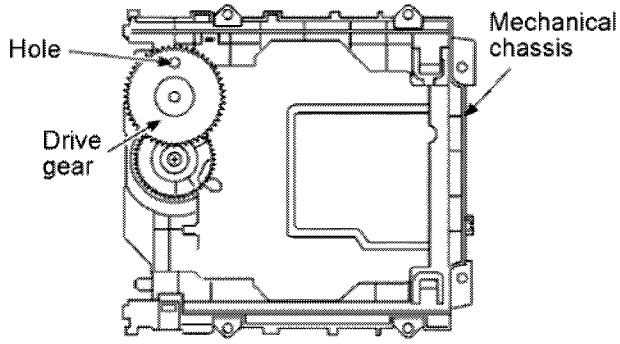


**Step 6** Adjust the protrusion of the cam gear to the position shown in the above figure.

**Step 7** Secure the traverse base to the emchanical chassis.

- Insert the front pin to the groove of the cam gear.
- Insert the protrusion of the traverse base into the groove of the mechanical chassis.

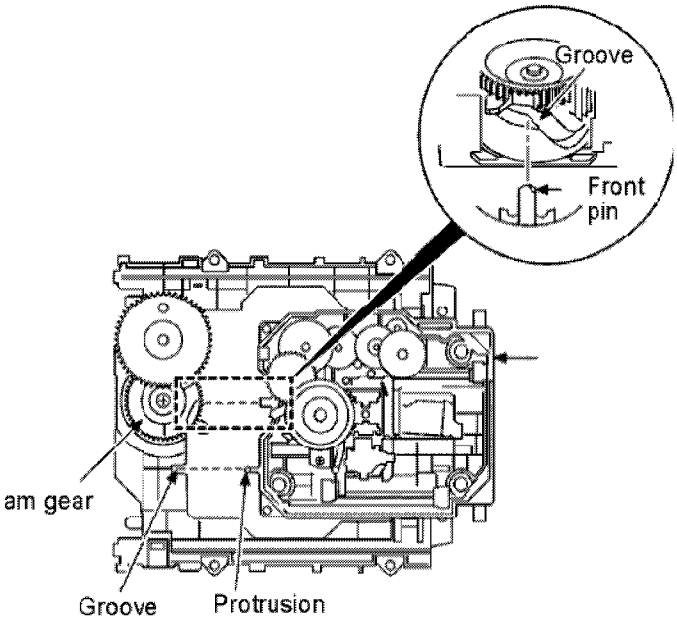


**Step 8** Push in the traverse base ans secure it with two hooks.

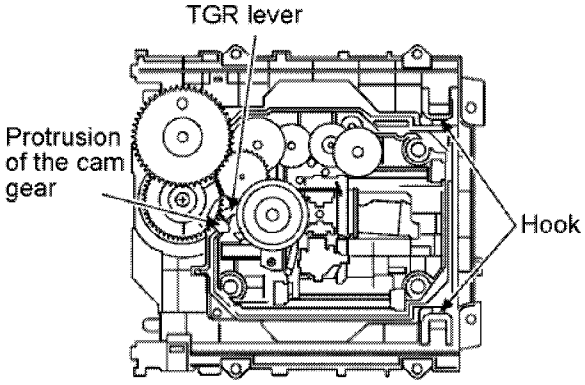


**Step 9** Check whether the TGR lever and the protrusion of the cam gear are positioned as shown in the above figure.

- Cautions when mounting the travere deck

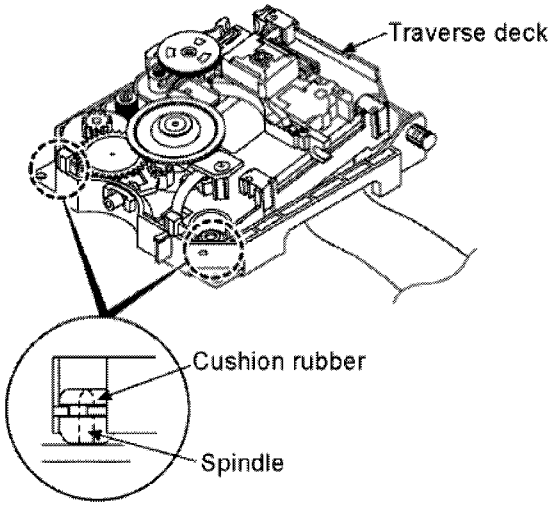


- How to secure the disc tray

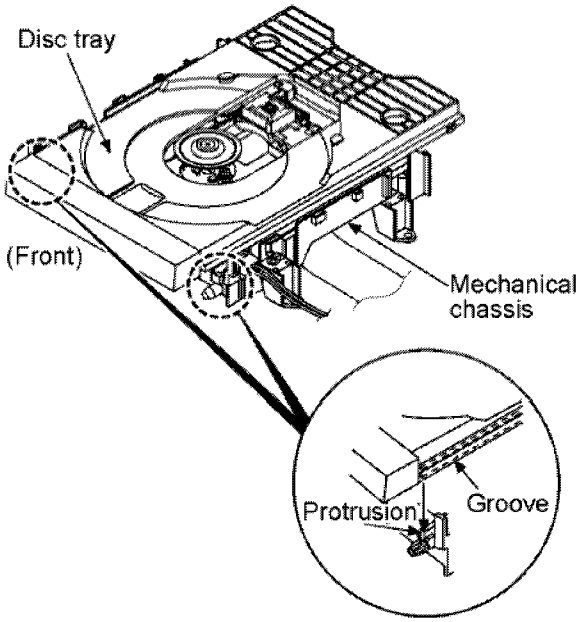


- Align the protrusion of the mechanical chassis to the front groove of the disc tray to secure it.

# 17 Adjustment Procedure

## 17.1. Required Tools and Equipment

### 17.1.1. Usage Equipment

| Purpose of Use | Tools/Equipment | Model/Product Number |
|---|---|---|
| Tilt adjustment | DVD test disc | DVDT-S15 or DVDT-S01 |
| | Hexagonal wrench‘ | Available on the market (2mm) |
| Others | Screw lock | RZZ0L01 |
| | Grease | RFKXGAK152, RFKXPG641 |
| Checking | CD test disc | PVCD-K06 and any commercially available disc |
| | VCD test disc | |
| | Recovery disc | RFKZD03R004 |

### 17.1.2. Necessity of Adjustment

#### 17.1.2.1. Necessity of Optical Adjustment

- Before starting optical system adjustment, be sure to wear proper protection gear against static electricity.
- Optical adjustment (optical pickup tilt adjustment) is required after following parts are replaced:
  1. Optical pickup
  2. Spindle motor assembly
  3. Optical pickup peripherals such as a rail, etc.

**Note:**

Optical adjustment is not necessary after replacement of other parts inside traverse, however, may require when picture deterioration is detected. Optical adjustment cannot be applied to the inside of optical pickup. When a traverse unit is replaced, the adjustment is not necessary.

### 17.1.3. Storing and Handling Test Discs

Surface precision is vital for DVD test discs. Be sure to store and handle them carefully.

- Do not leave the discs uncovered on the work desk or other places after use.
- Handle the discs carefully to prevent scratches. Put each disc in its case and place it in the standing position. Store the discs in a cool place and avoid direct sunlight or air conditioner.
- Accurate adjustment cannot be expected with a disc warped against a flat surface. Obtain a new test disc for optical adjustment.
- If a warped disc is used, adjustment would result incorrectly, and other discs could not be used.

## 17.1.4. Optical Adjustment (Optical Pickup Tilt Adjustment)

| Measurement point | Adjustment point | Mode | Disc |
|---|---|---|---|
| | Tangential adjustment screw<br>Tilt adjustment screw | T1 (inner track) replay<br>T43 (outer track) replay | DVDT-S15 or DVDT-S01 |
| Measuring equipment | | Adjustment value | |
| None (LCD display of the player is used.) | | Adjust that jitter value becomes minimum. | |

### 17.1.4.1. Adjustment Procedure

1. While the player is stopped and no disc is inserted, select the DVD function. Press and hold down the ■ button on the player and the number button, "5" on the remote controller unit.
2. Check that "J_xxx_yyy_zz" is appearing on the display.

   **For your information:**

   The values, "yyy" and "zz" are not associated to jitter value.
   "yyy" indicates the frequency of error occurrence.
   "zz" indicates the focus drive value.

   **Note:**

   Jitter value appears on the display.
3. Replay T01 (inner track) of the test disc.
4. Adjust till the jitter value becomes minimum, using a tangential adjustment screw. <Fig. 17-1>
5. Replay T43 (outer track) of the test disc.
6. Adjust till the jitter value becomes minimum, using a tilt adjustment screw 1. <Fig. 17-1>
7. Replay T43 (outer track ) of the test disc.
8. Adjust till the jitter value becomes minimum, using a tilt adjustment screw 2.<Fig. 17-1>
9. Adjust till the jitter value becomes, using the tilt adjustment screws 1 and 2 alternatively.

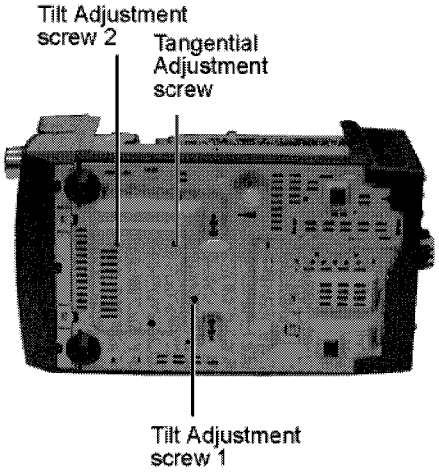


Fig. 17-1

### 17.1.4.2. Tips

1. Apply the tangential adjustment first and then the tilt adjustment.
2. Repeat the adjustment a couple of times to find the optimum point.
3. Complete with the tilt adjustment.

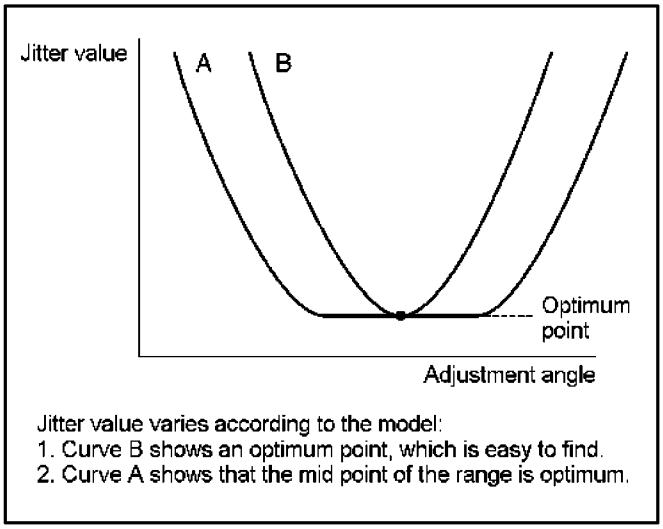


### 17.1.4.3. Check After Adjustment

Replay test discs or other commercial discs in order to confirm that no picture deterioration or sound skipping is detected in the inner, middle, and outer tracks. After this, fasten each adjustment screw securely using a screw lock.

### 17.1.4.4. Procedure for Screw Lock

1. After adjustment, remove the top cover, clamper base, disc tray and then traverse unit.
2. Place the traverse unit upside down, and fasten the adjustment screws with a screw lock. <Fig. 17.2>
3. After fastening the screws, assemble in order of the traverse unit, disc tray, clamper base, and then top cover.

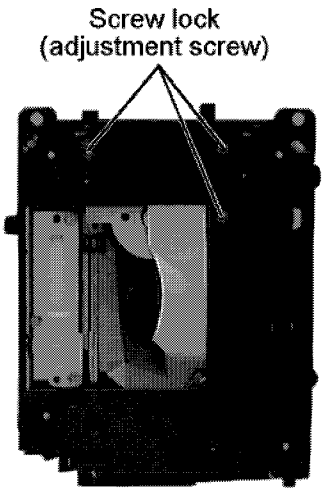


Fig. 17-2

# 18 Terminal Function of IC

## 18.1. IC201 (C2DBJH000006) Micro-processor

| Pin No. | Mark | I/O | Function |
|---|---|---|---|
| 1 | N.C. | I/O | (Output L: No Connection) |
| 2 | N.C. | I/O | (Output L: No Connection) |
| 3 | N.C. | I/O | (Output L: No Connection) |
| 4 | FL_DA | I/O | FL Dirver Data Output |
| 5 | FL_CLK | I/O | FL Driver Clock Output |
| 6 | E_DATA_IN | I/O | EEPROM's Data Out (DO) |
| 7 | E_DATA_OUT | I/O | EEPROM's Data In (DI) |
| 8 | E_CLK | I/O | EEPROM's Clock |
| 9 | EVDD | - | Power Input for 5V I/O (+3.3V for PM1 set) |
| 10 | EVSS | - | GND |
| 11 | N.C. | I/O | (Output L: No Connection) |
| 12 | N.C. | I/O | (Output L: No Connection) |
| 13 | RM_IN | I | Remocon Input |
| 14 | N.C. | I/O | (Output L: No Connection) |
| 15 | RDS_DAT | I | RDS Data Port |
| 16 | N.C. | I/O | (Output L: No Connection) |
| 17 | RDS_CLK | I | RDS CLOCK setting Port |
| 18 | N.C. | I/O | (Output L: No Connection) |
| 19 | N.C. | I/O | (Output L: No Connection) |
| 20 | N.C. | I/O | (Output L: No Connection) |
| 21 | IC/Vpp | - | GND |
| 22 | N.C. | I/O | (Output L: No Connection) |
| 23 | N.C. | I/O | (Output L: No Connection) |
| 24 | RGB-CTRL | I/O | RGB Control Line |
| 25 | TRAY MUTE | I/O | DVD Tray Mute (L: ON) |
| 26 | TRAY CLOSE_SW | I/O | DVD DL1 Mecha Tray Open Switch Input |
| 27 | TRAY TRV | I/O | DVD DL1 Mecha Tray/ Traverse Driver switching. (L: Tray) |
| 28 | TRAY FIN | I/O | DVD DL1 Mecha Motor Control Output |
| 29 | TRAY RIN | I/O | DVD DL1 Mecha Motor Control Output |
| 30 | TRAY OPEN_SW | I/O | DVD DL1 Mecha Motor Tray Open Switch Input (L:ON) |
| 31 | N.C. | I/O | (Output L: No Connection) |
| 32 | SC_WIDE | I/O | Wide Screen Control (Output for SC RT) |
| 33 | WIDE1 | I/O | Wide Screen Control Output |
| 34 | MICOM RST | I | MICON Reset (L: RESET) |
| 35 | XTI | I | Suboscillator Input |
| 36 | XTO | O | Suboscillator Output |
| 37 | REGC | - | Capacitor for regulator |
| 38 | XO | O | Main oscillator Output |
| 39 | XI | I | Main oscillator Input |
| 40 | VSS | - | GND |
| 41 | VDD | - | Power Input Pin (+5V) |
| 42 | CLOOUT | O | Internal Bus Clock Out |
| 43 | ASP_CLK | I/O | ASP Clock Output |
| 44 | ASP_DAT | I/O | ASP Data Output |
| 45 | N.C. | I/O | (Output L: No Connection) |
| 46 | SD | I/O | Tuner Signal Detect |
| 47 | PLL CE | I/O | PLL Chip Enable Output |
| 48 | PLL_DAT_OUT | I/O | PLL Count Data Output |
| 49 | PLL_DAT_IN | I/O | PLL Control Data Input/ Stereo Detect |
| 48 | PLL_DAT_OUT | I/O | PLL Count Data Output |
| 50 | PLL CLK | I/O | PLL Clock Output |
| 51 | N.C. | I/O | No Connection |
| 52 | N.C. | I/O | No Connection |
| 53 | N.C. | I/O | (Output L: No Connection) |
| 54 | ECS | I/O | EEPROM CS Output |
| 55 | PCONT | I/O | Power Control Output 1 (PWR Supply, active H |
| 56 | N.C. | I/O | (Output L: No Connection) |
| 57 | DVD PCONT | I/O | DVD Unit Power Controlo Output(active H) |
| 58 | BVDD | - | Power Input For 5V I/O |
| 59 | BVss | - | GND\ |
| 60 | MUTE A | I/O | (Output L: No Connection) |
| 61 | MUTE H | I/O | Line out signal mute output for H-IC |
| 62 | DVD_MUTE | I/O | DVD Mute Request |
| 63 | Prog | I/O | Progressive\ control |
| 64 | N.C. | I/O | (Output L: No Connection) |
| 65 | N.C. | I/O | (Output L: No Connection) |
| 66 | AVSS2 | O | AVSS control level 2 |
| 67 | N.C. | I/O | (Output L: No Connection) |
| 68 | N.C. | I/O | (Output L: No Connection) |
| 69 | L1 | O | Subwoofer Level COntrol 1 |
| 70 | L2 | O | Subwoofer Level COntrol 2 |
| 71 | CR TIMER | I/O | CR Timer |
| 72 | N.C. | I/O | (Output L: No Connection) |
| 73 | N.C. | I/O | (Output L: No Connection) |
| 74 | AVDD | - | Power Input for A/D Converter (+5V) |
| 75 | N\AVSS | - | GND For A/D Converter |
| 76 | AVREF | - | A/D Converter reference voltage (+5V) |
| 77 | PWRDET | I | Power Detect\ |
| 78 | DES | I | Destination setting |
| 79 | DP0/DP1 | I | Model Setting |
| 80 | DES_TU | I | Tuner setting |
| 81 | KEY 1 Input | I | Key 1 Input |
| 82 | KEY 2 Input | I | Key 2 Input |
| 83 | JOG1 | I | Jog Input 1 (Volume) |
| 84 | JOG2 | I | Jog Input 2 (Volume) |
| 85 | N.C. | I/O | (No Connection) |
| 86 | N.C. | I/O | (No Connection) |
| 87 | N.C. | I | (Input L: Pull down) |
| 88 | N.C. | I | (Input L: Pull down) |
| 89 | HP_SW | I/O | Headphone detection SW Input |
| 90 | N.C. | I/O | No connection |
| 91 | SYNC | I | Pulse Input For AC supply Failure Detection |
| 92 | N.C. | I/O | No connection |
| 93 | FL CS | I/O | FL Driver Chip Select |
| 94 | FL RST | I/O | FL Driver Reset |
| 95 | N.C. | I | (Output L: No Connection) |
| 96 | RM IN | I | REMOCON Input |
| 97 | DVD Status | I/O | DVD Data In |
| 98 | DVD CMD | I/O | DVD Data Out |
| 99 | DVD CLK | I/O | DVD Clock Input |
| 100 | N.C. | I/O | (Output L: No Connection) |

# 19 Block Diagram

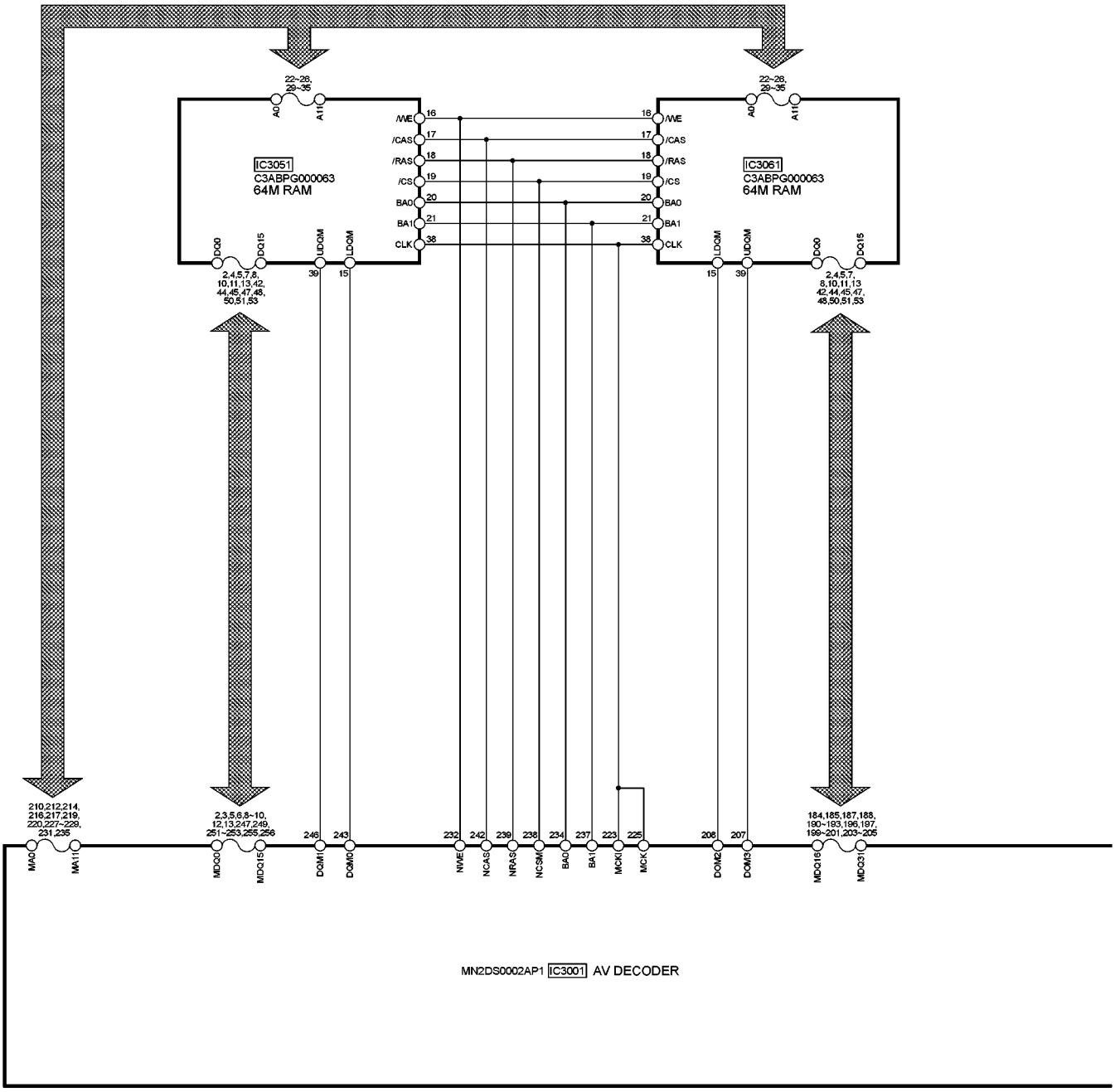

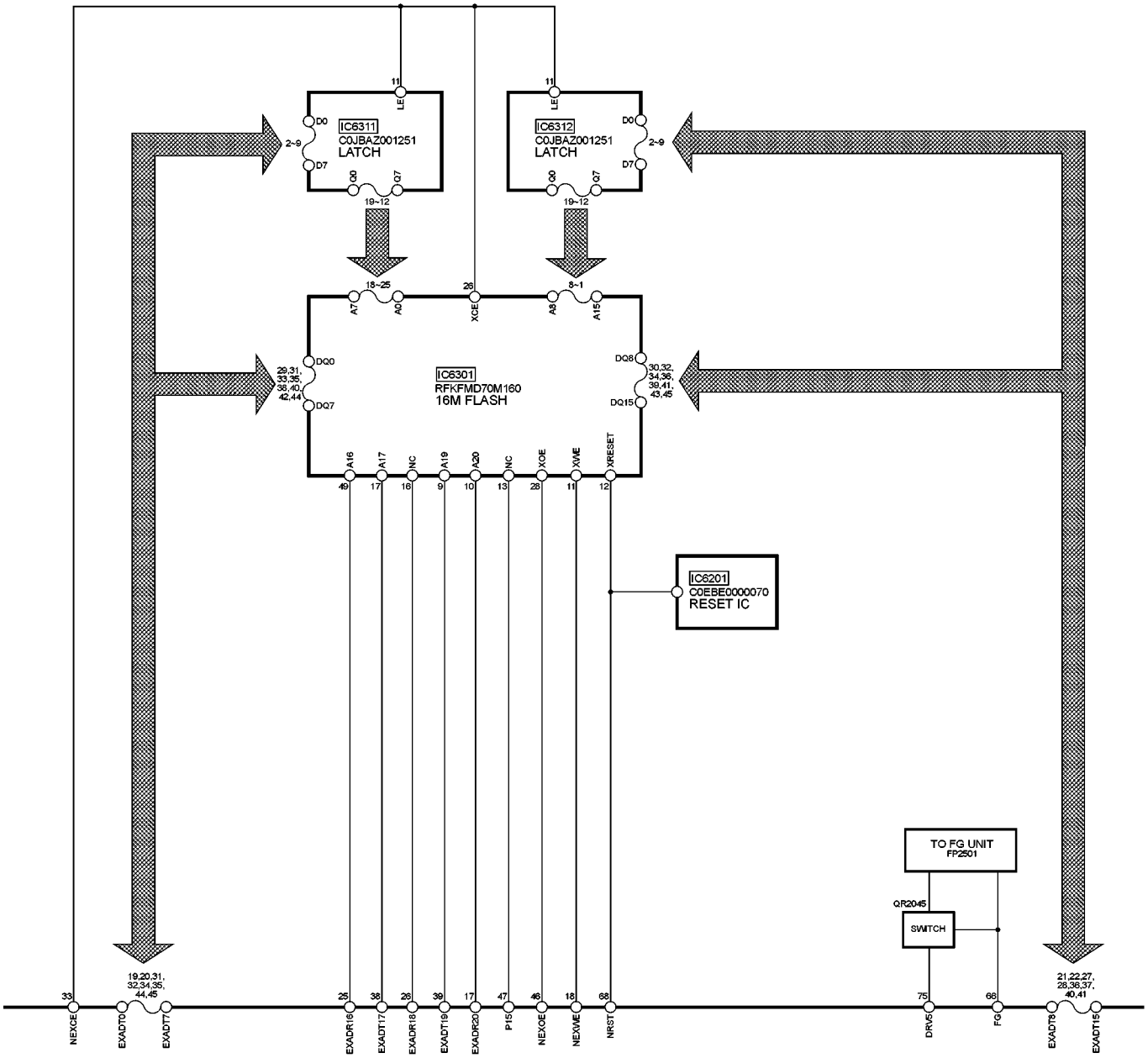


MN2DS0002AP1 IC3001 AV DECODER

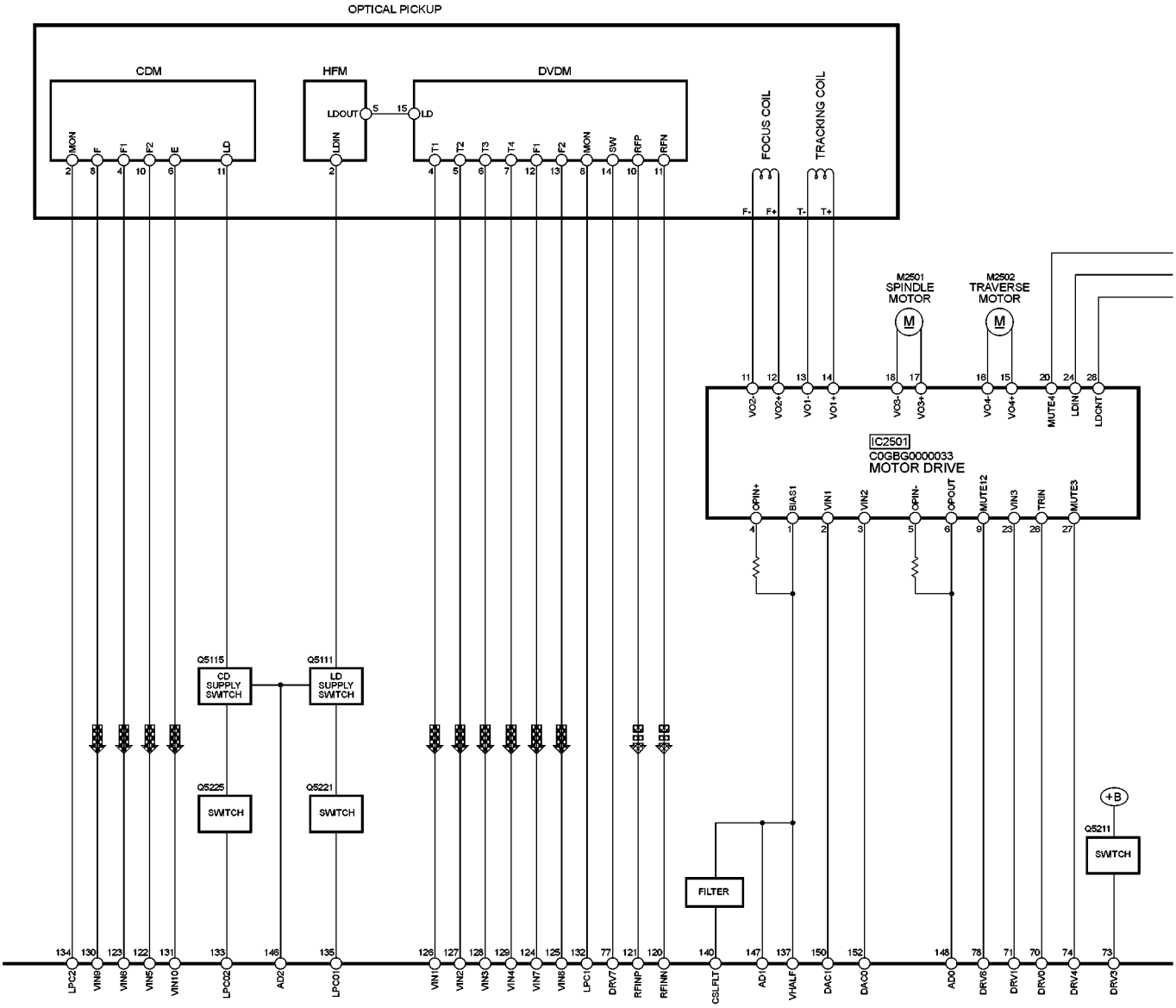


MN2DS0002AP1 IC3001 AV DECODER

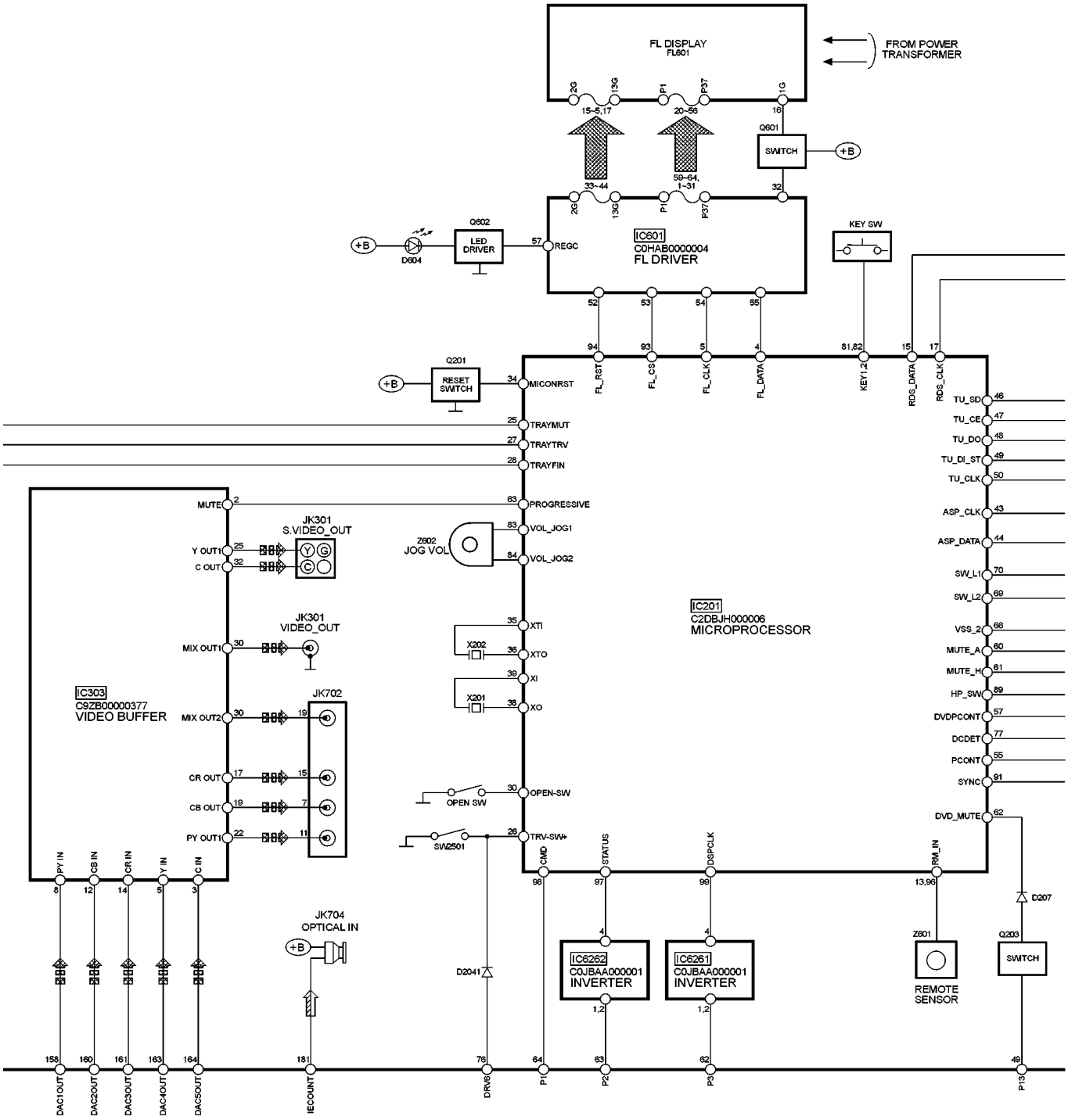


MN2DS0002AP1 IC3001 AV DECODER

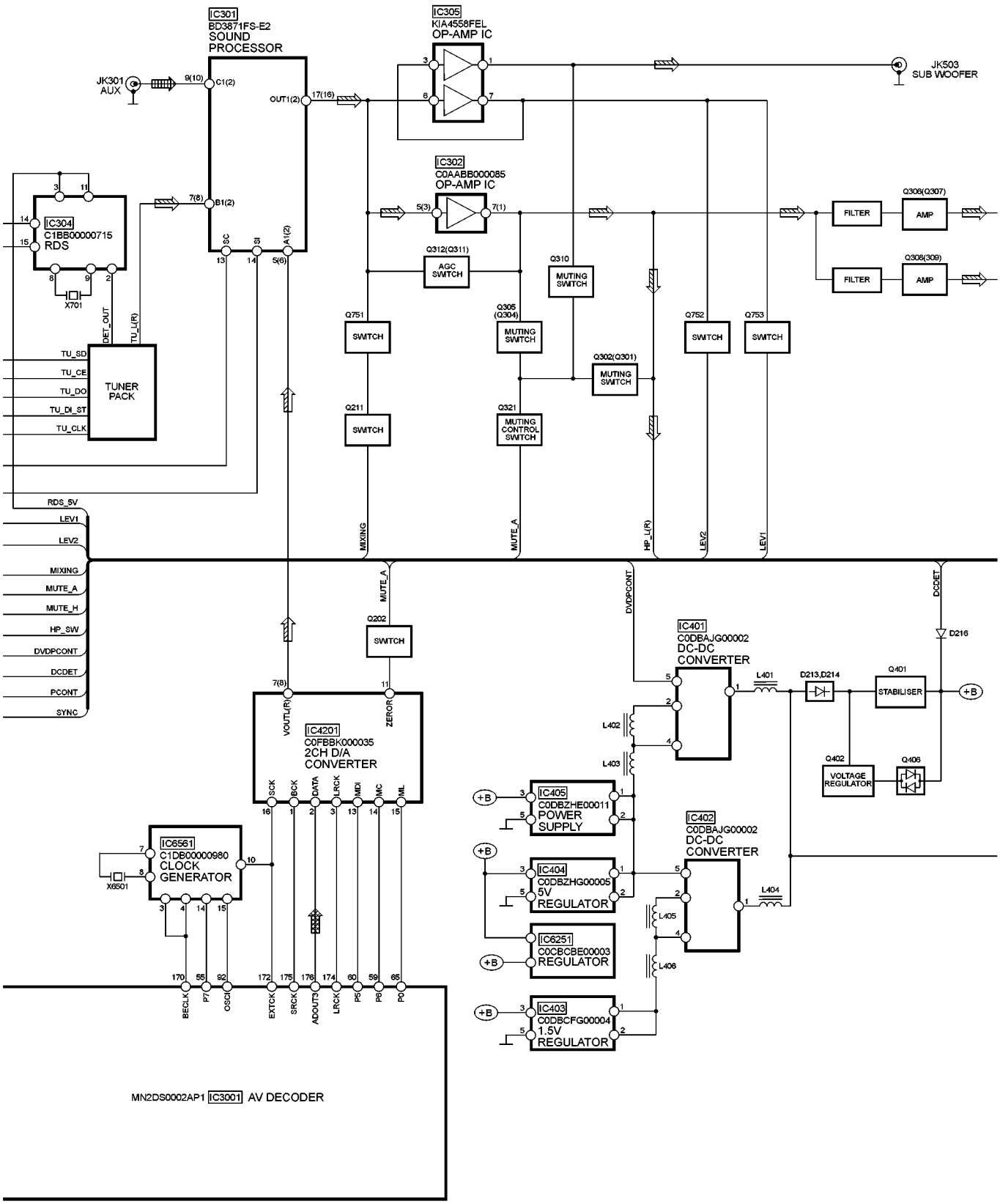
IC301
BD3871FS-E2
SOUND PROCESSOR
IC305
KIA4558FEL
OP-AMP IC
JK301
AUX
JK503
SUB WOOFER
IC302
C0AABB000085
OP-AMP IC
IC304
C1BB00000715
RDS
X701
TUNER PACK
TU_SD
TU_CE
TU_DO
TU_DI_ST
TU_CLK
DET_OUT
TU_L(R)
Q312(Q311)
AGC SWITCH
Q310
MUTING SWITCH
Q305 (Q304)
MUTING SWITCH
Q302(Q301)
MUTING SWITCH
Q321
MUTING CONTROL SWITCH
Q751
SWITCH
Q211
SWITCH
Q752
SWITCH
Q753
SWITCH
FILTER
Q308(Q307)
AMP
FILTER
Q308(309)
AMP
RDS_5V
LEV1
LEV2
MIXING
MUTE_A
MUTE_H
HP_SW
DVDPCONT
DCDET
PCONT
SYNC
MIXING
MUTE_A
HP_L(R)
LEV2
LEV1
Q202
SWITCH
IC4201
C0FBBK000035
2CH D/A CONVERTER
VOUTL(R)
ZEROR
SCK
BCK
DATA
LRCK
MDI
MC
ML
IC6561
C1DB00000980
CLOCK GENERATOR
X6501
BECLK
P7
OSCI
EXTCK
SRCK
ADOUT3
LRCK
P5
P6
P0
MN2DS0002AP1 IC3001 AV DECODER
IC401
C0DBAJG00002
DC-DC CONVERTER
L401
D213,D214
Q401
STABILISER
+B
D216
DCDET
DVDPCONT
L402
L403
Q402
VOLTAGE REGULATOR
Q406
IC405
C0DBZHE00011
POWER SUPPLY
IC404
C0DBZHG00005
5V REGULATOR
IC6251
C0CBCBE00003
REGULATOR
IC403
C0DBCFG00004
1.5V REGULATOR
IC402
C0DBAJG00002
DC-DC CONVERTER
L404
L405
L406

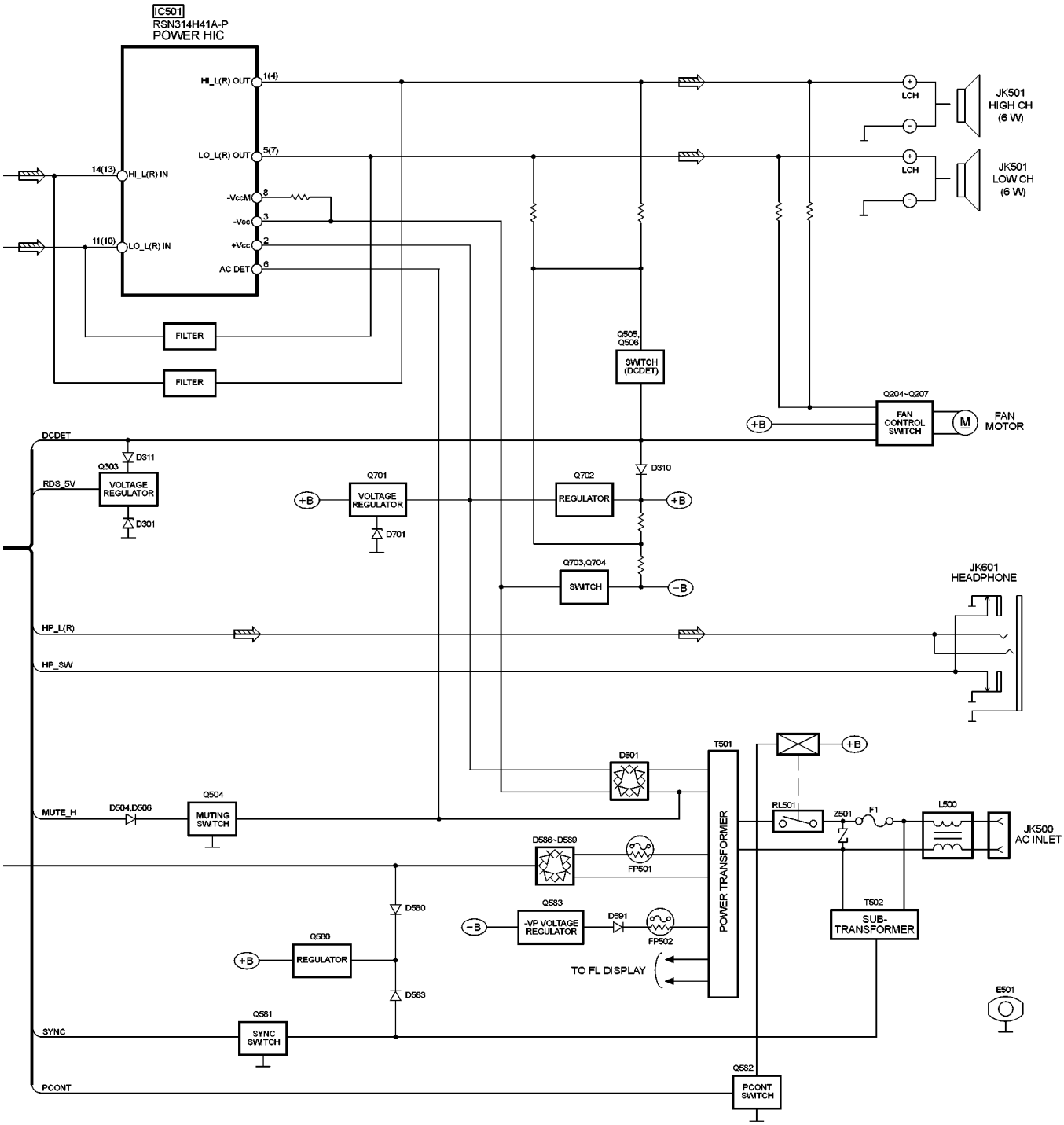


SIGNAL LINES

| | |
|---|---|
| : MAIN SIGNAL LINE | : DVD AUDIO SIGNAL LINE |
| : FM /AM SIGNAL LINE | : DVD VIDEO SIGNAL LINE |
| : CD-DA (AUDIO /VIDEO) SIGNAL LINE | : AUX SIGNAL LINE |
| ( ) Indicates the Pin No. of Right Channel. | NOTE : Signal Lines are applicable to the Left Channel only. |

# 20 Schematic Diagram

(All schematic diagrams may be modified at any time with the development of the new technology)

Note:

| | |
|---|---|
| **S605** | : Power switch |
| **S606** | : Surround switch |
| **S607** | : Rev/Skip switch |
| **S608** | : For/Skip switch |
| **S609** | : Stop switch |
| **S610** | : Open/Close switch |
| **S611** | : Selector switch |
| **S612** | : DVD/Play switch |

- The voltage value and waveforms are the reference voltage of this unit measured by DC electronic voltmeter (high impedance) and oscilloscope on the basis of chassis. Accordingly, there may arise some error in voltage values and waveforms depending upon the internal impedance of the tester or the measuring unit.

- **Importance safety notice :**

  Components identified by ⚠ mark have special characteristics important for safety. Furthermore, special parts which have purposes of fire-retardant (resistors), high-quality sound (capacitors), low-noise (resistors), etc. are used. When replacing any of components, be sure to use only manufacturer´s specified parts shown in the parts list.

**Caution !**

IC, LSI and VLSI are sensitive to static electricity.

Secondary trouble can be prevented by taking care during repair.

- Cover the parts boxes made of plastics with aluminium foil.
- Put a conductive mat on the work table.
- Ground the soldering iron.
- Do not touch the pins of IC, LSI or VLSI with fingers directly.

## SCHEMATIC DIAGRAM-1

### A DVD MODULE (1) CIRCUIT

: CD-DA SIGNAL LINE
: +B SIGNAL LINE

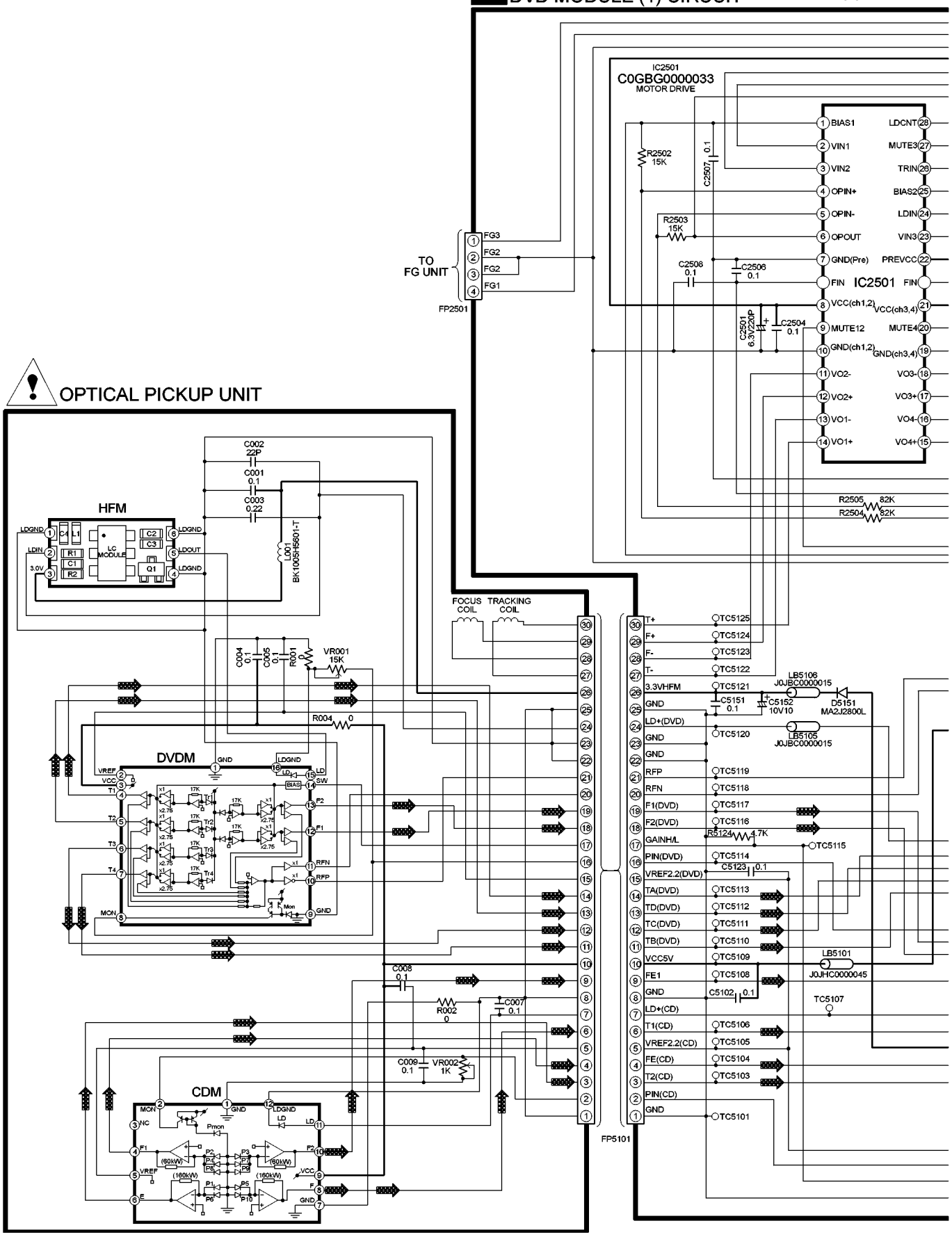

## SCHEMATIC DIAGRAM-2

## A DVD MODULE (1) CIRCUIT

: CD-DA SIGNAL LINE
: +B SIGNAL LINE

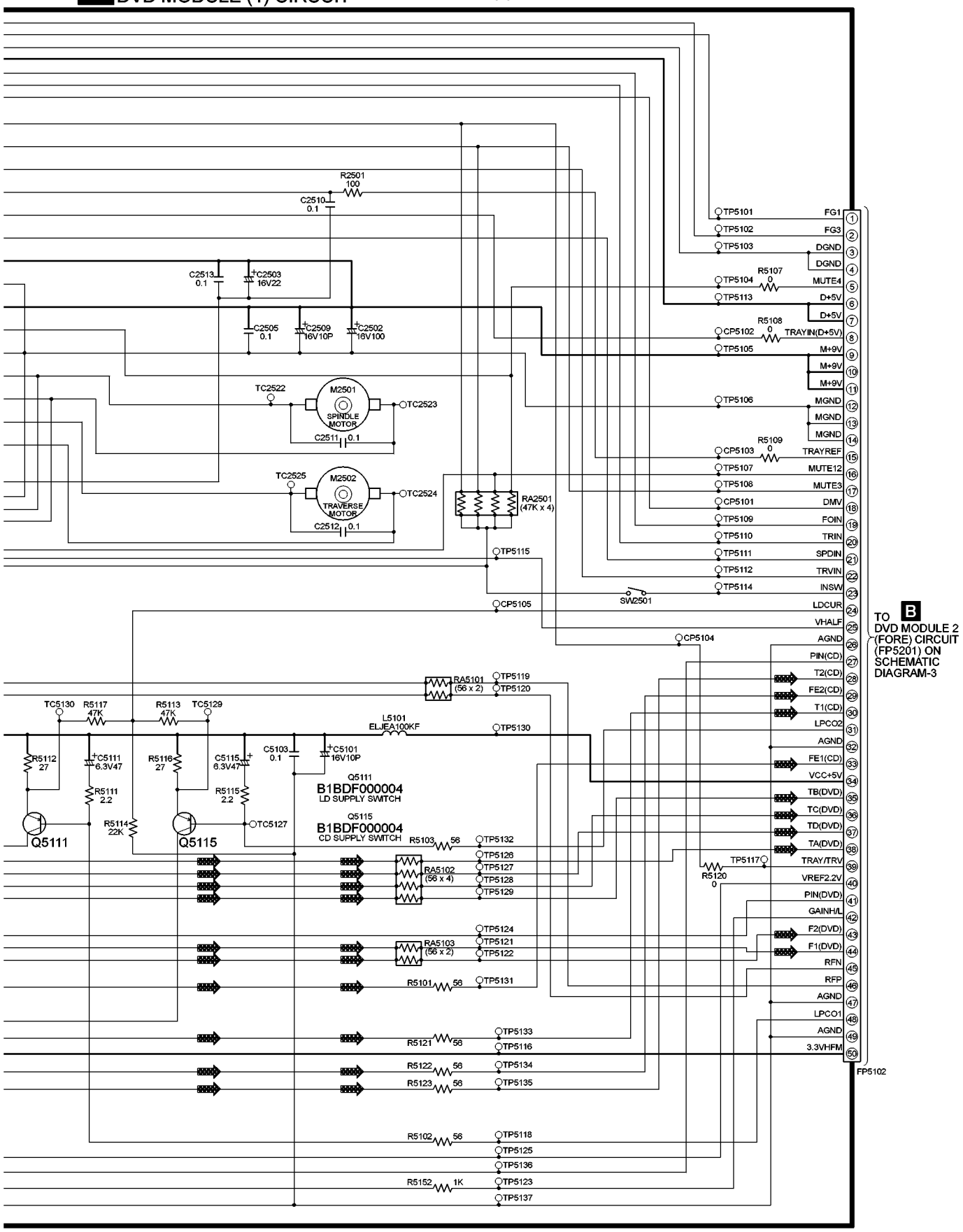

## SCHEMATIC DIAGRAM - 3

### B DVD MODULE 2 (FORE) CIRCUIT

: CD-DA SIGNAL LINE
: +B SIGNAL LINE

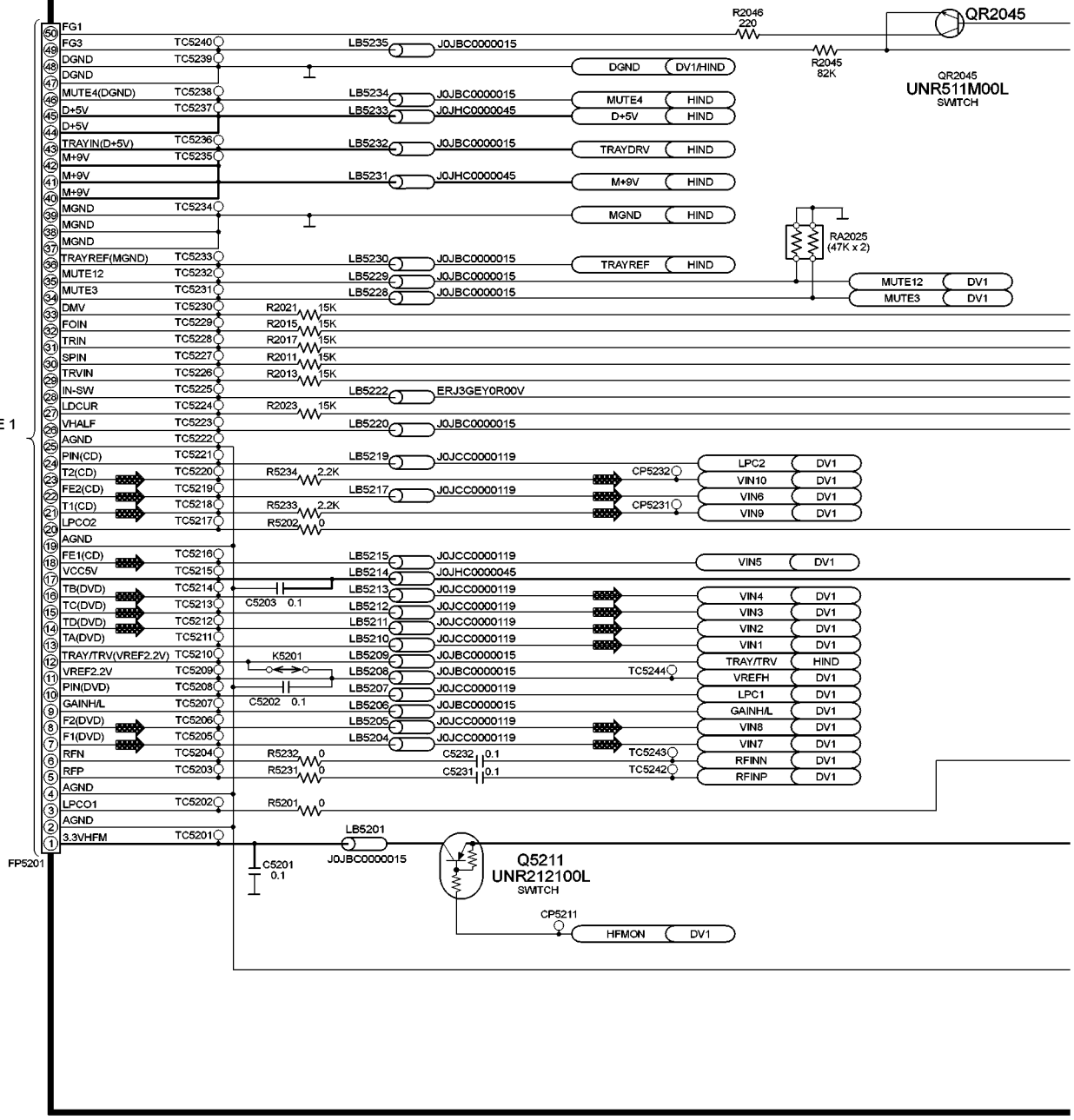

## SCHEMATIC DIAGRAM - 4

## B DVD MODULE 2 (FORE) CIRCUIT

——— : +B SIGNAL LINE

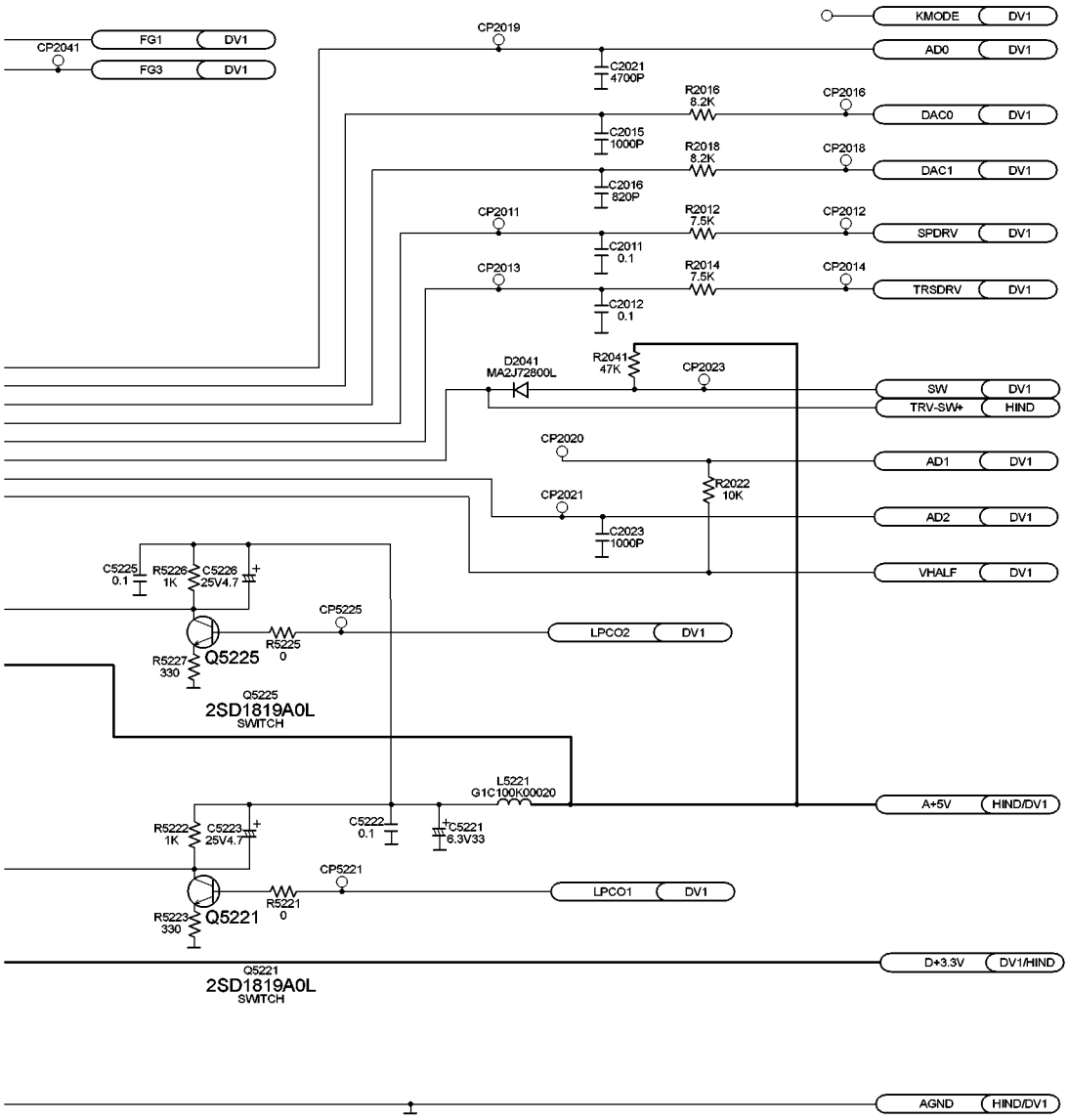

# SCHEMATIC DIAGRAM - 5

## B DVD MODULE 2 (DV1) CIRCUIT

——— : +B SIGNAL LINE

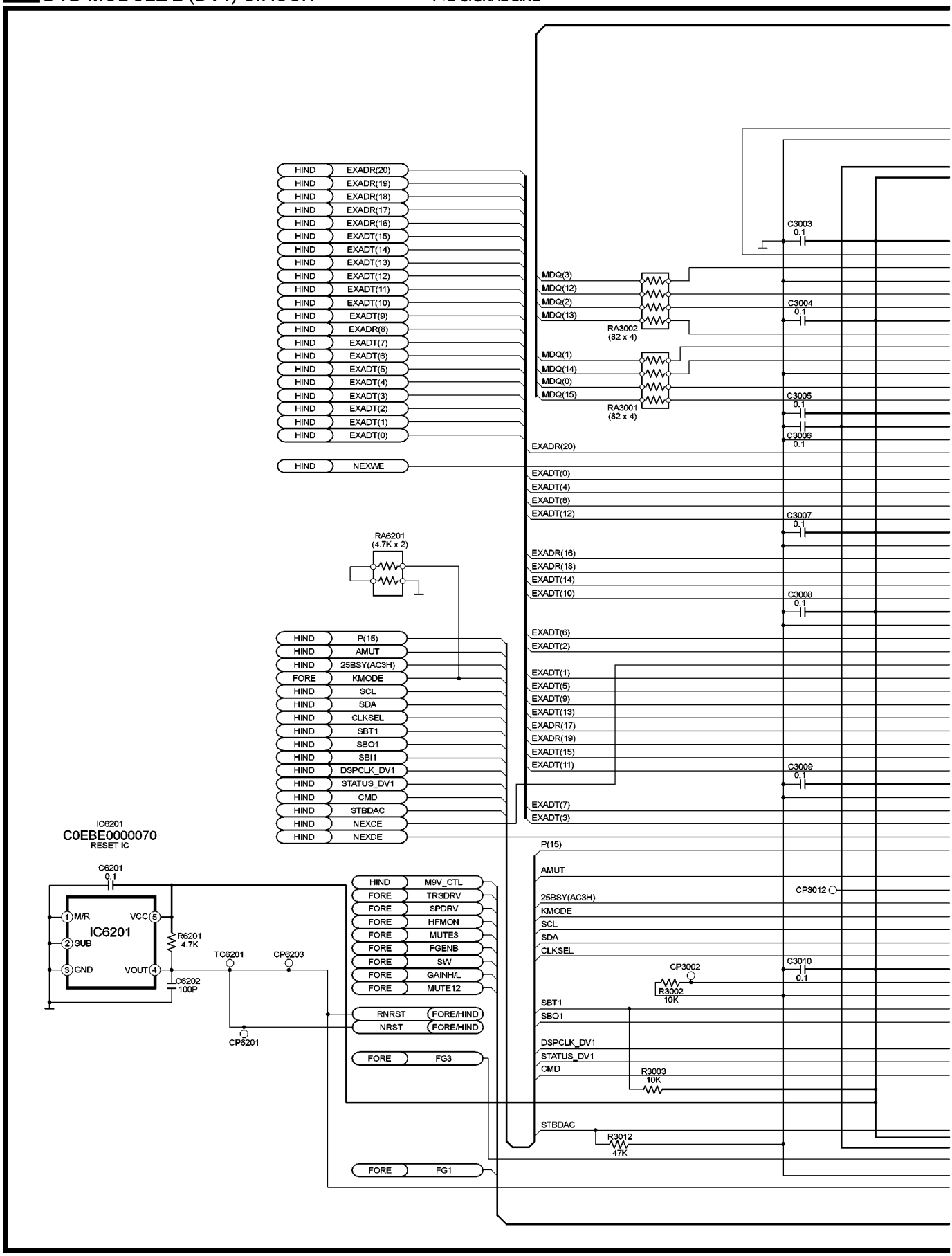

# SCHEMATIC DIAGRAM - 6

## B DVD MODULE 2 (DV1) CIRCUIT

: CD-DA SIGNAL LINE
: +B SIGNAL LINE

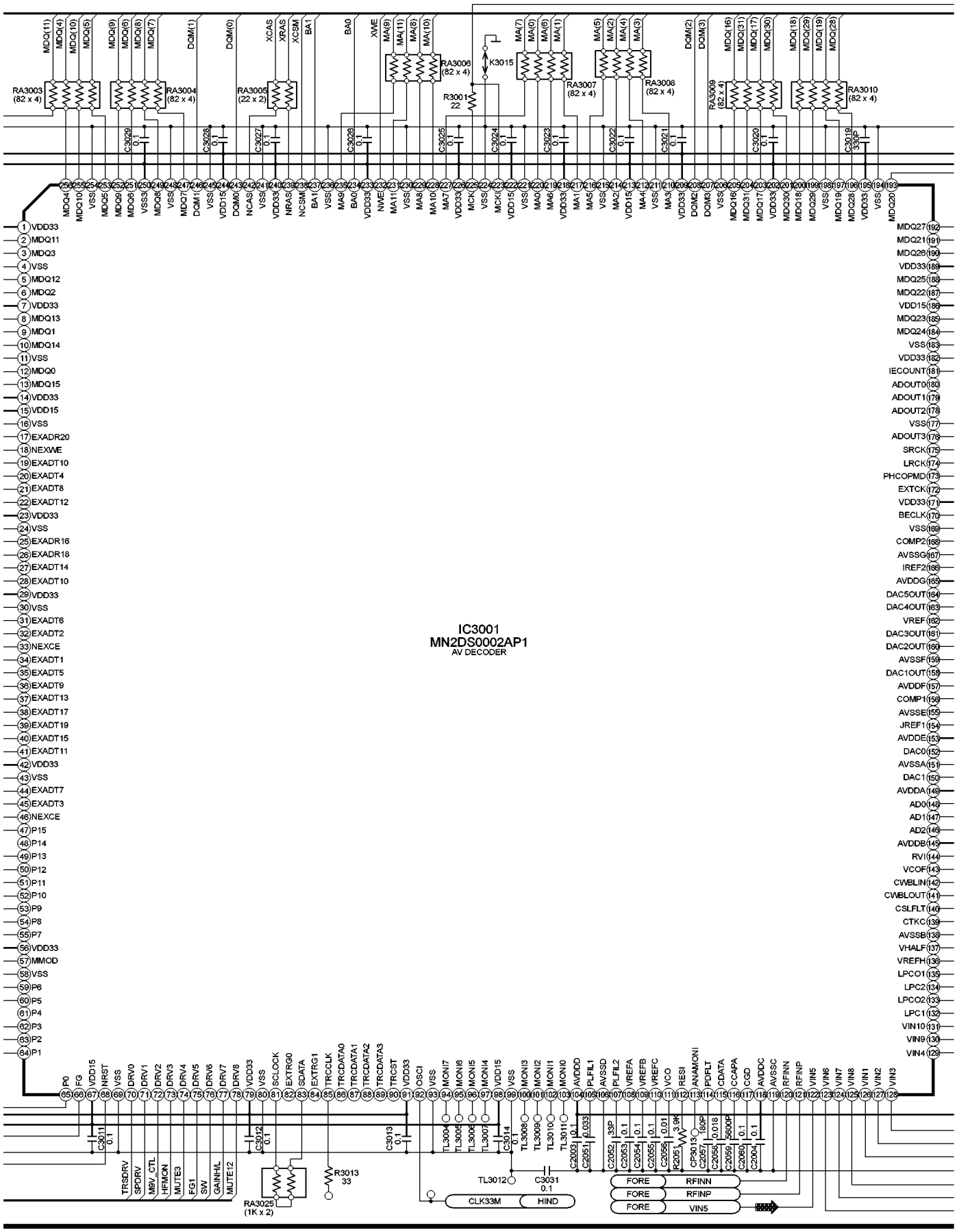

# SCHEMATIC DIAGRAM - 7

## B DVD MODULE 2 (DV1) CIRCUIT

: CD-DA SIGNAL LINE
: +B SIGNAL LINE
: DVD (AUDIO) SIGNAL LINE
: DVD (VIDEO) SIGNAL LINE

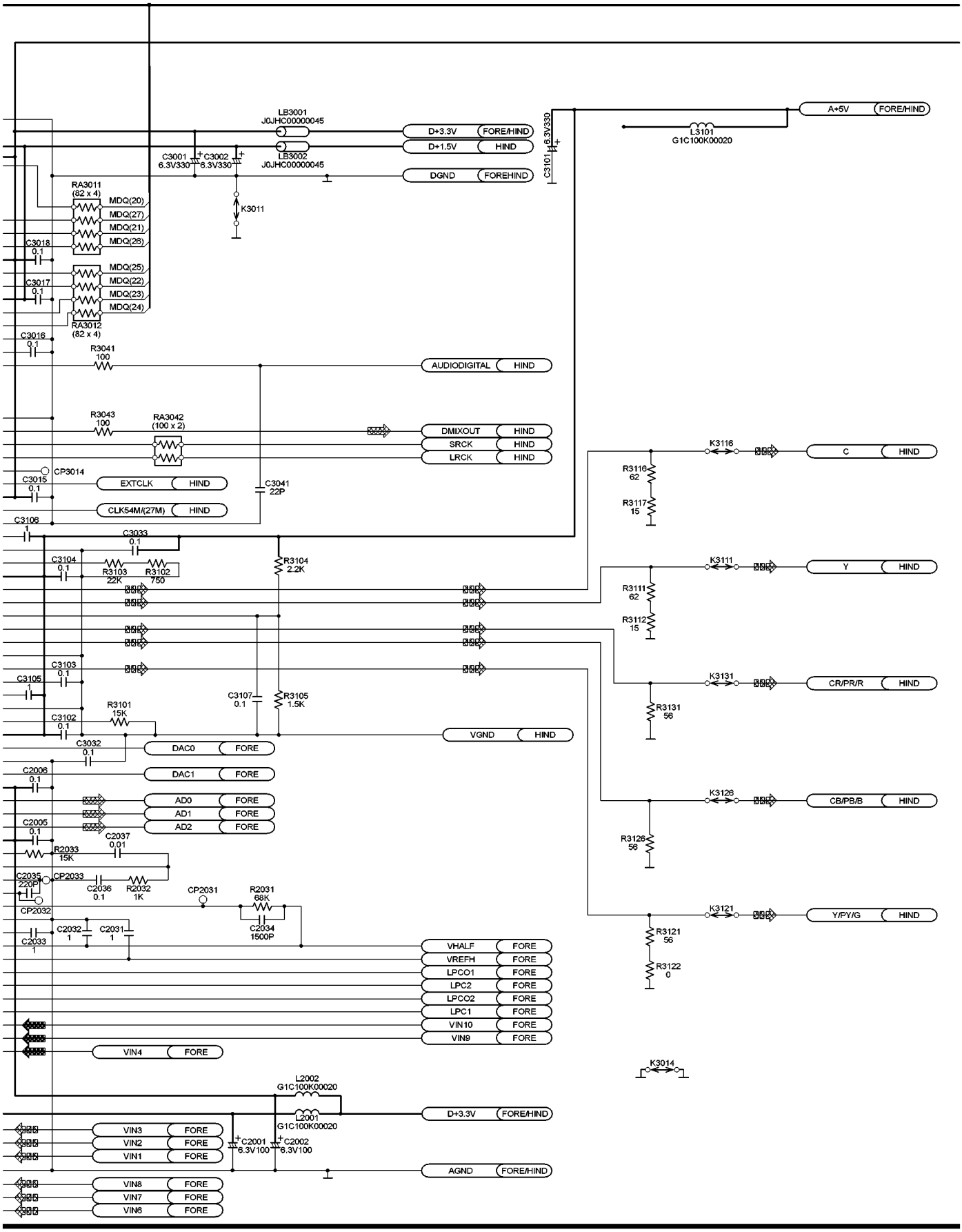

## SCHEMATIC DIAGRAM - 8

## B DVD MODULE 2 (DV1) CIRCUIT

——— : +B SIGNAL LINE

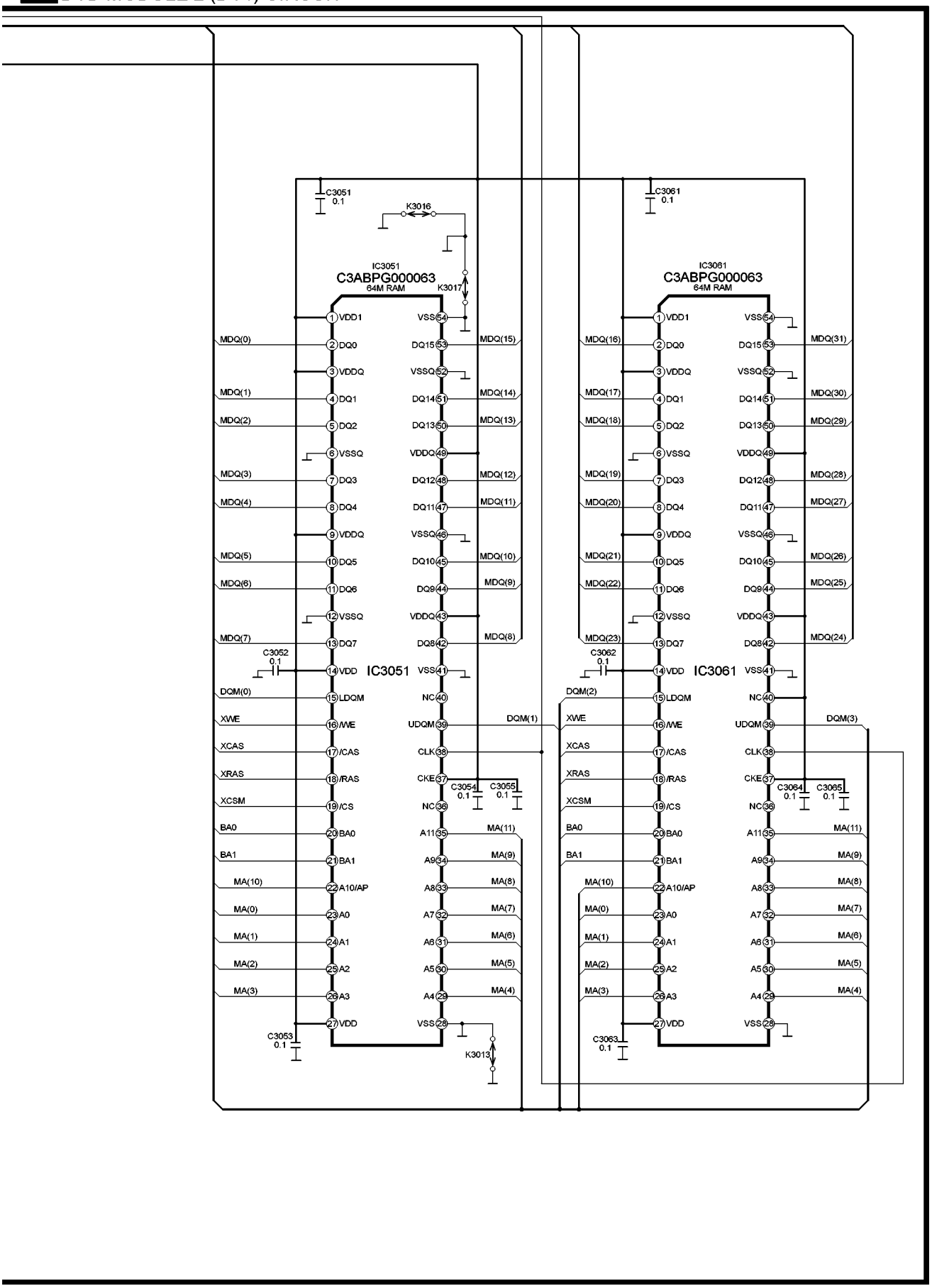

# SCHEMATIC DIAGRAM - 9

## B DVD MODULE 2 (HIND) CIRCUIT

: +B SIGNAL LINE

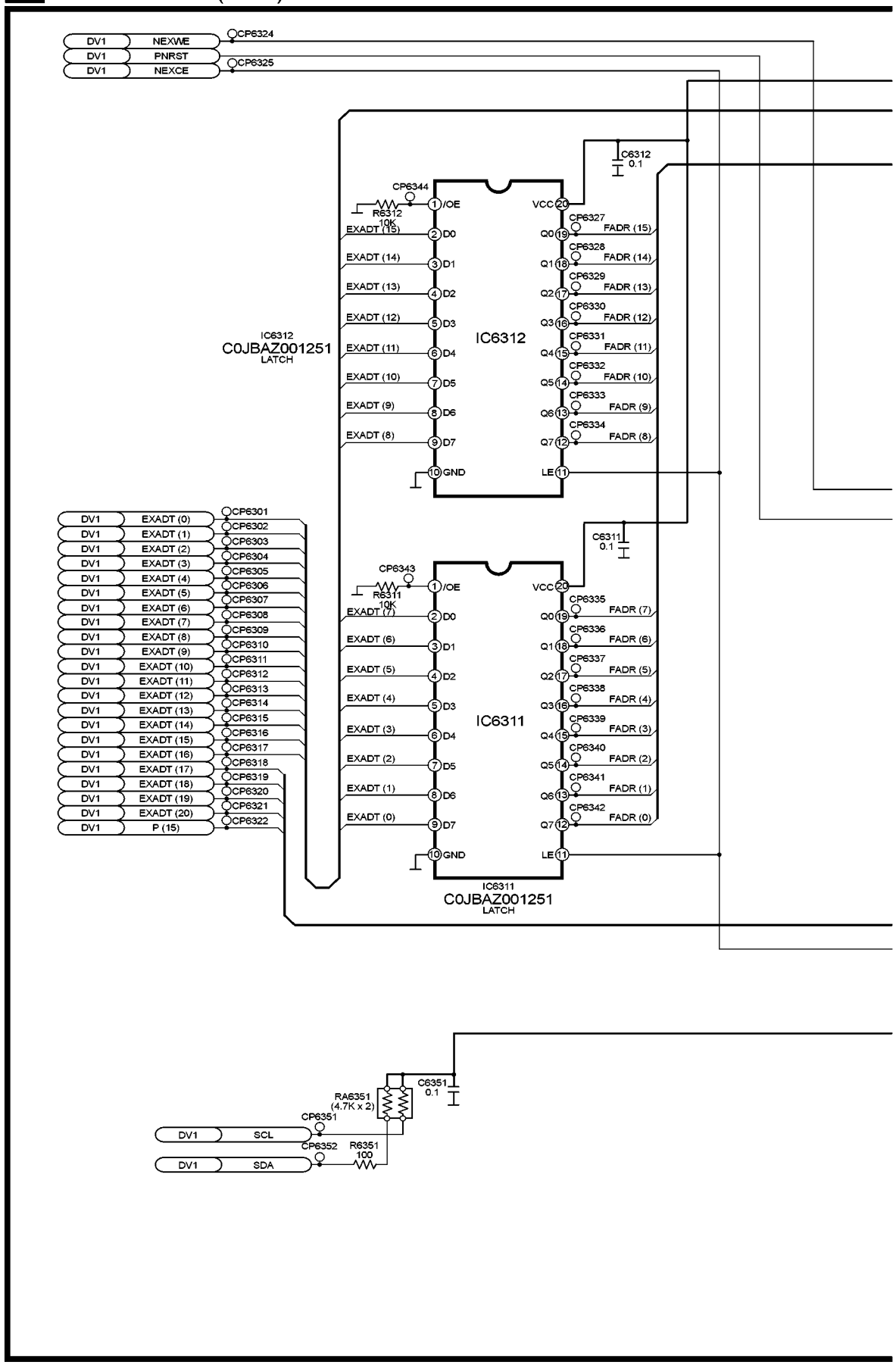

# SCHEMATIC DIAGRAM - 10

## B DVD MODULE 2 (HIND) CIRCUIT

——— : +B SIGNAL LINE

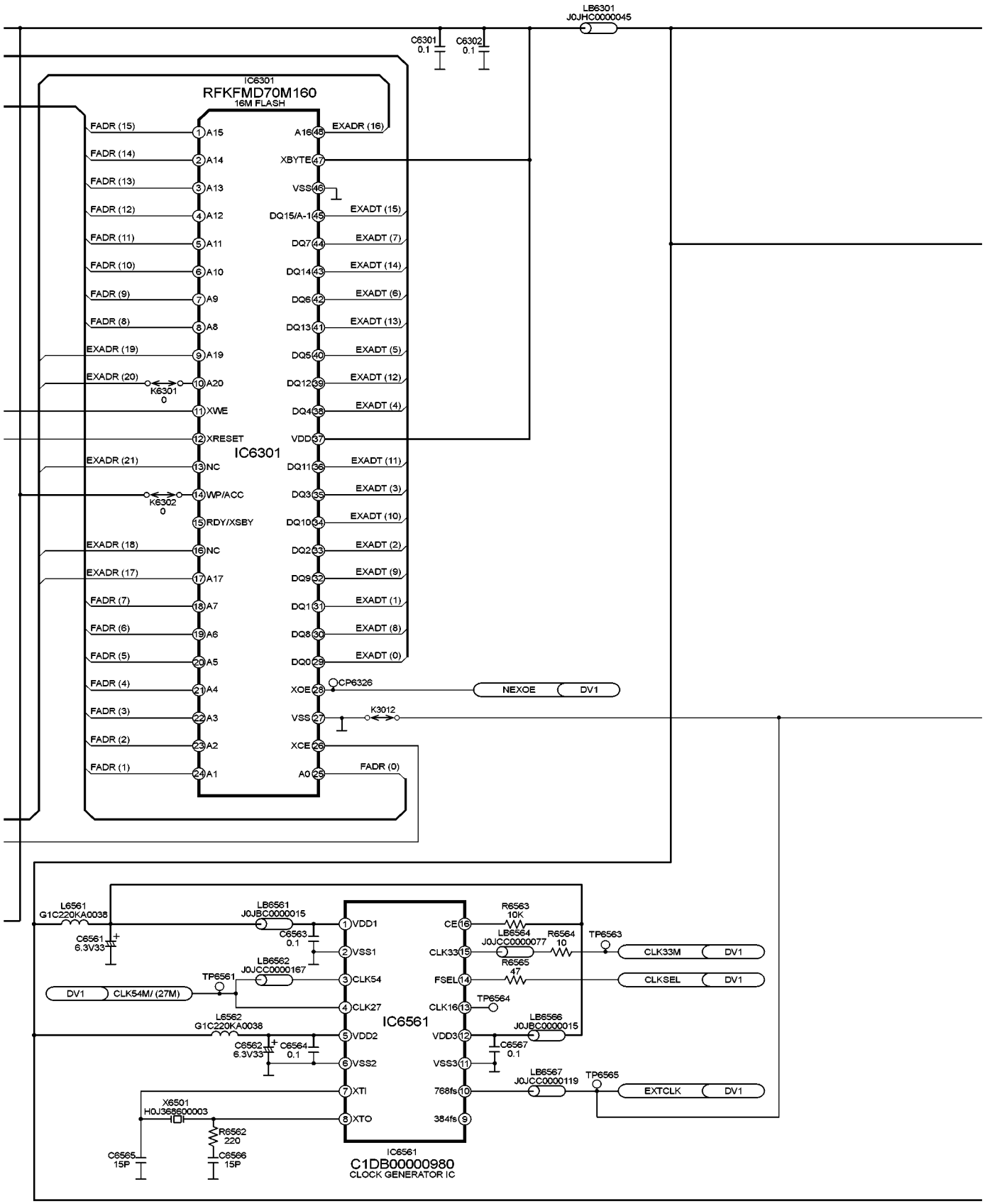

# SCHEMATIC DIAGRAM - 11

## B DVD MODULE 2 (HIND) CIRCUIT

: +B SIGNAL LINE
: MAIN SIGNAL LINE
: DVD (AUDIO) SIGNAL LINE

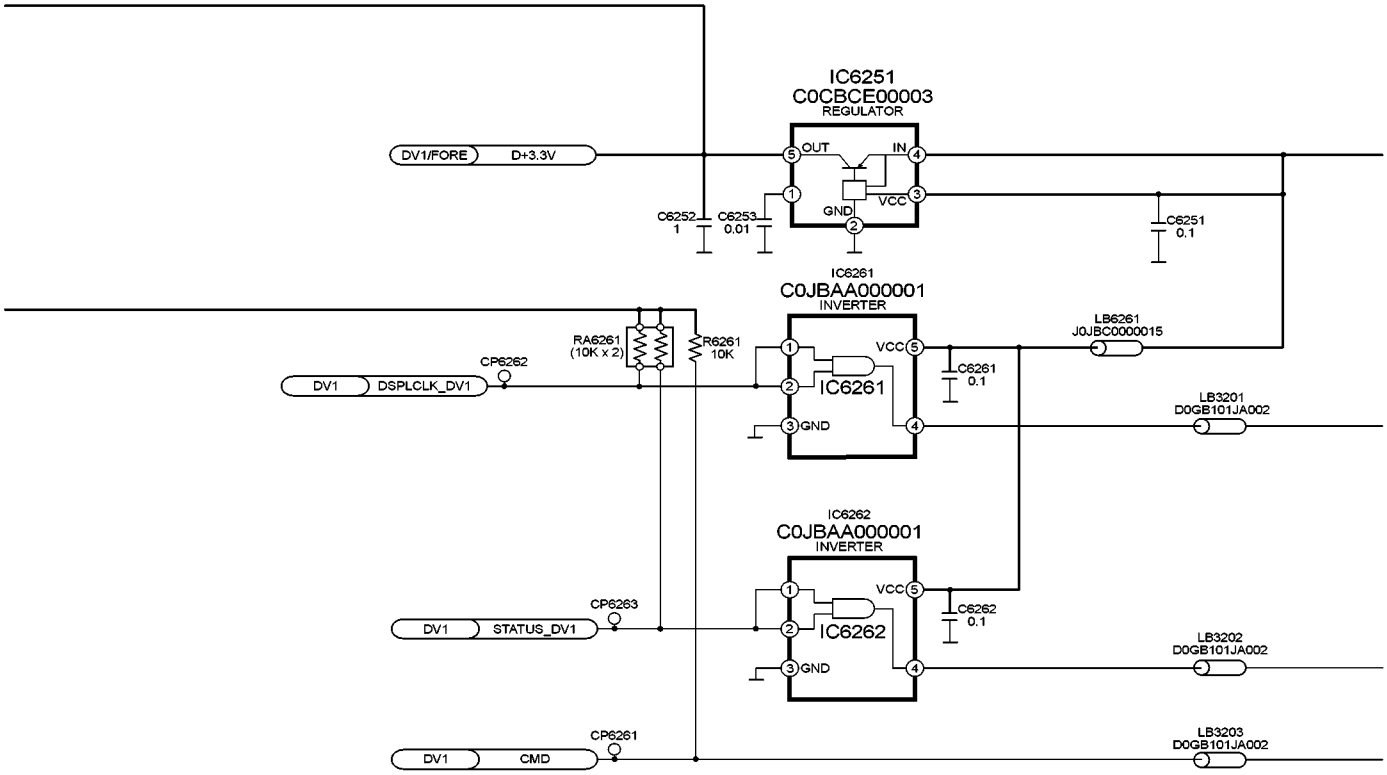


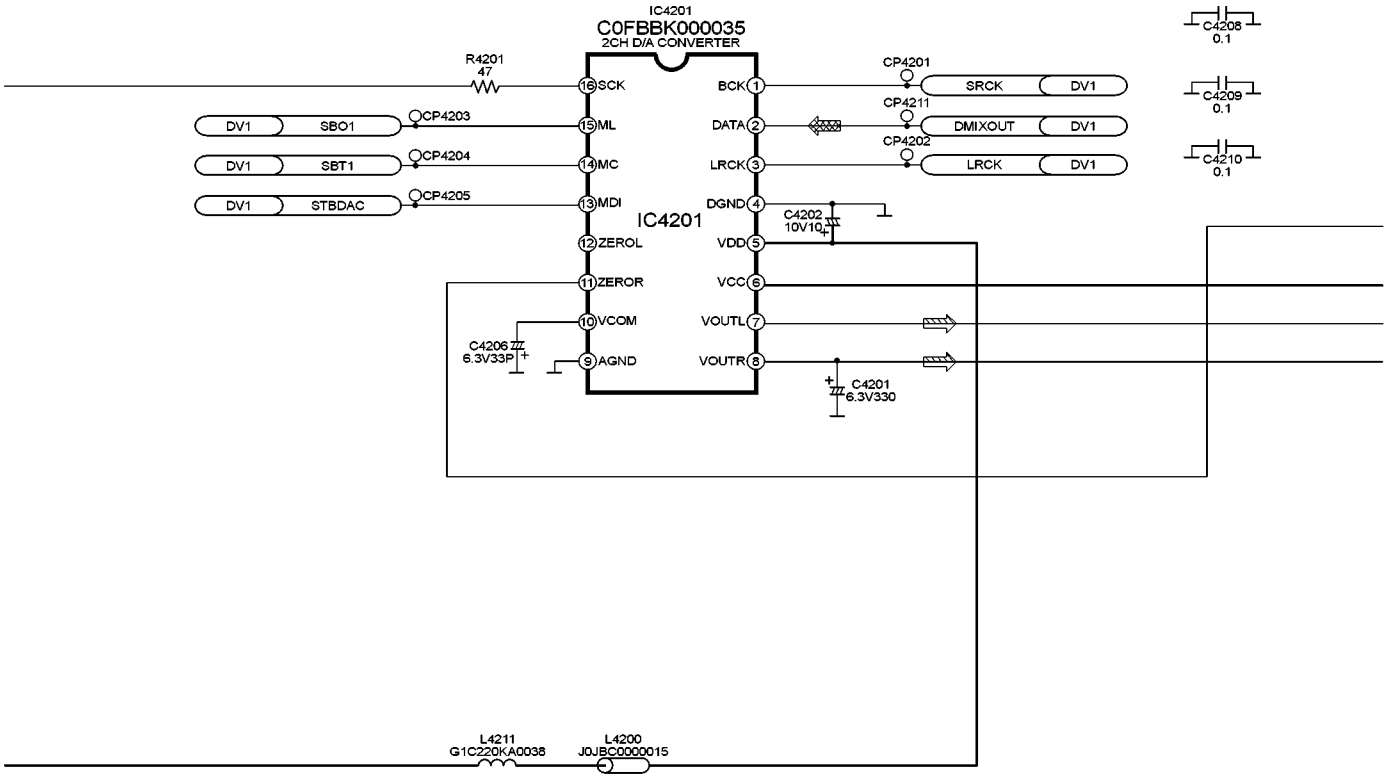

# SCHEMATIC DIAGRAM - 12

## B DVD MODULE 2 (HIND) CIRCUIT

: +B SIGNAL LINE

: DVD (VIDEO) SIGNAL LINE

: MAIN SIGNAL LINE

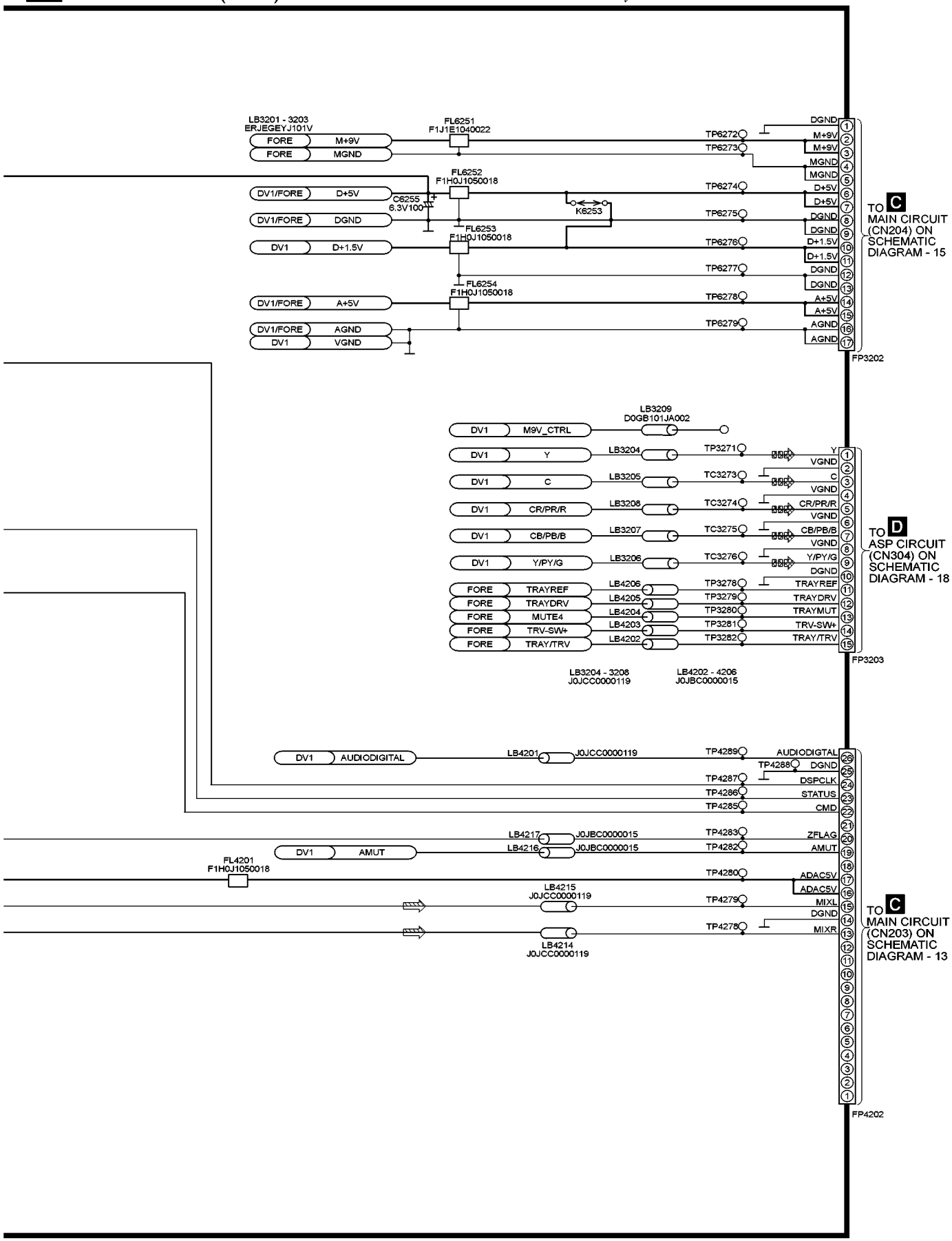

# SCHEMATIC DIAGRAM - 13

—— : +B SIGNAL LINE ⇨ : MAIN SIGNAL LINE

## C MAIN CIRCUIT

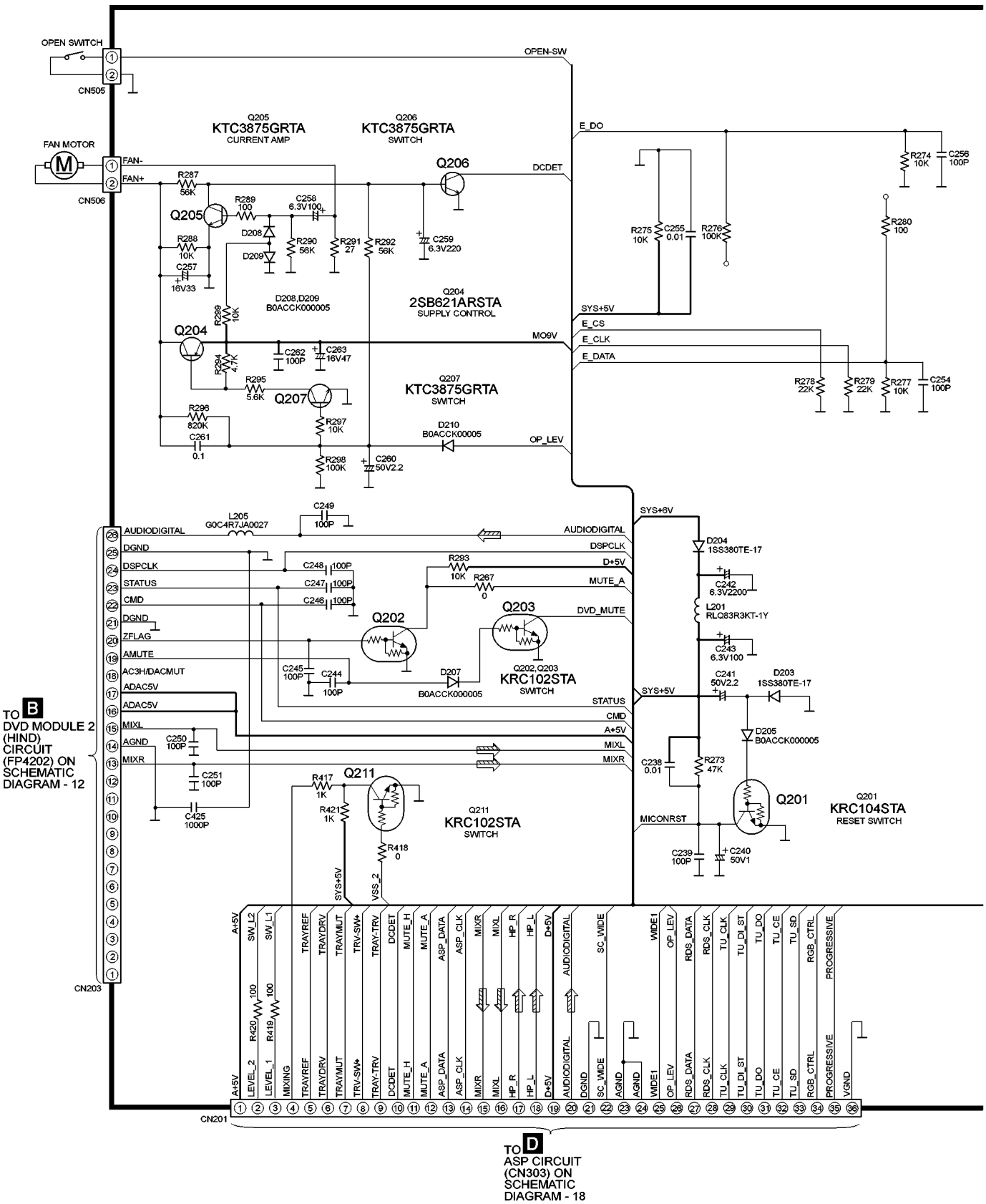

# SCHEMATIC DIAGRAM -14

—— : +B SIGNAL LINE

## C MAIN CIRCUIT

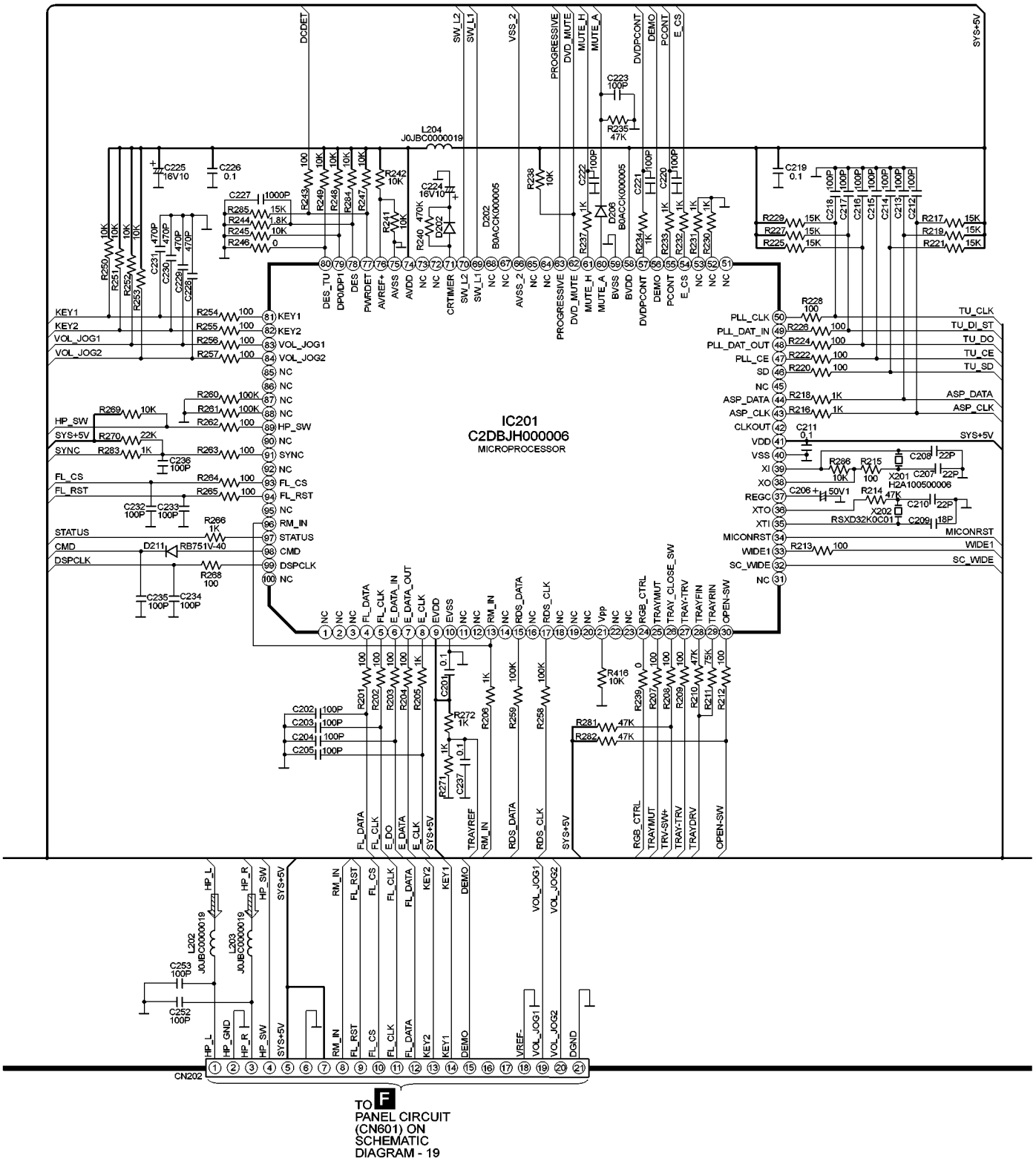

## SCHEMATIC DIAGRAM - 15

—— : +B SIGNAL LINE

### C MAIN CIRCUIT

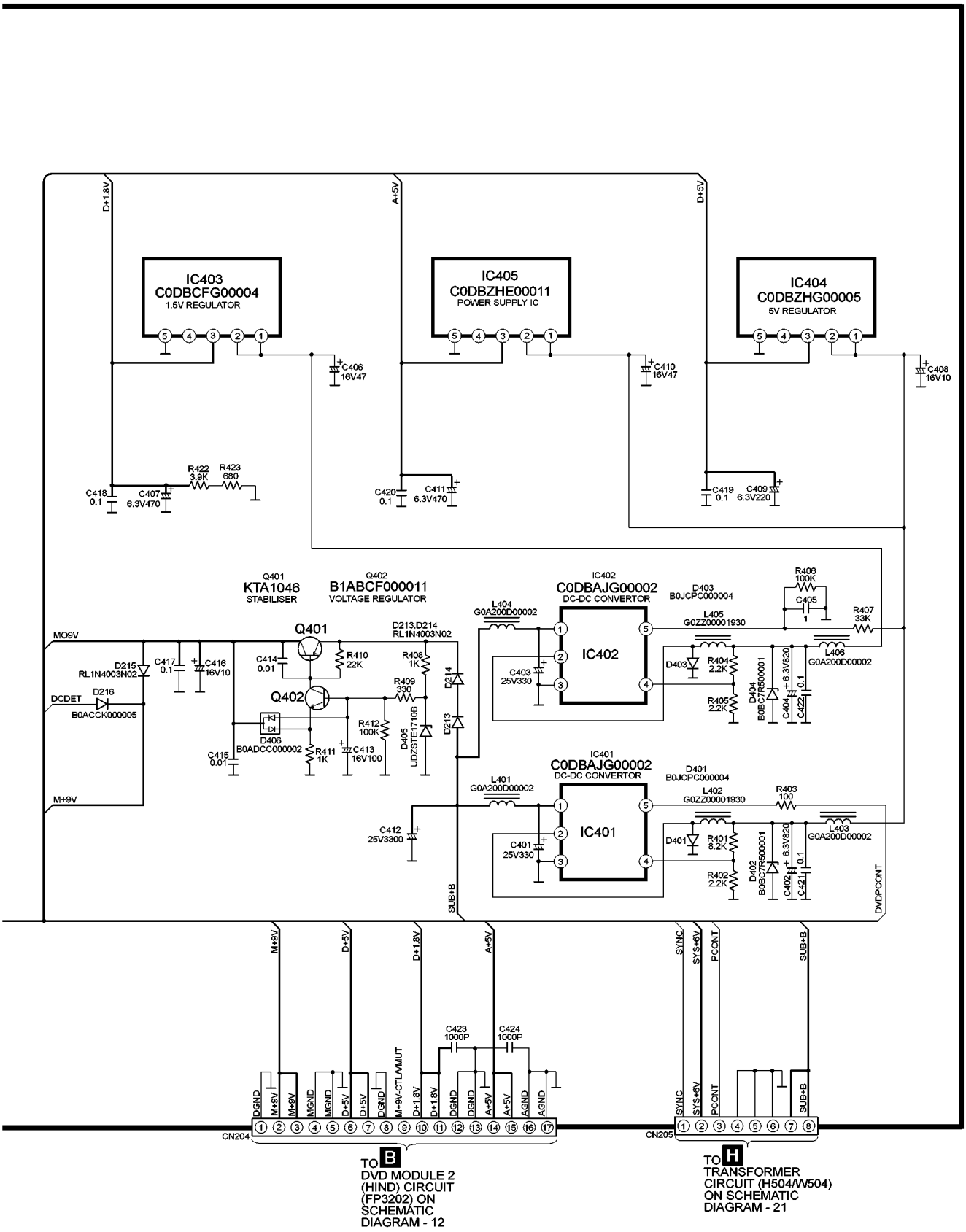

# SCHEMATIC DIAGRAM - 16

—— : +B SIGNAL LINE
– – : -B SIGNAL LINE
: AUX SIGNAL LINE
: FM/AM SIGNAL LINE
: DVD VIDEO SIGNAL LINE
: MAIN SIGNAL LINE

## E SCART TERMINAL CIRCUIT

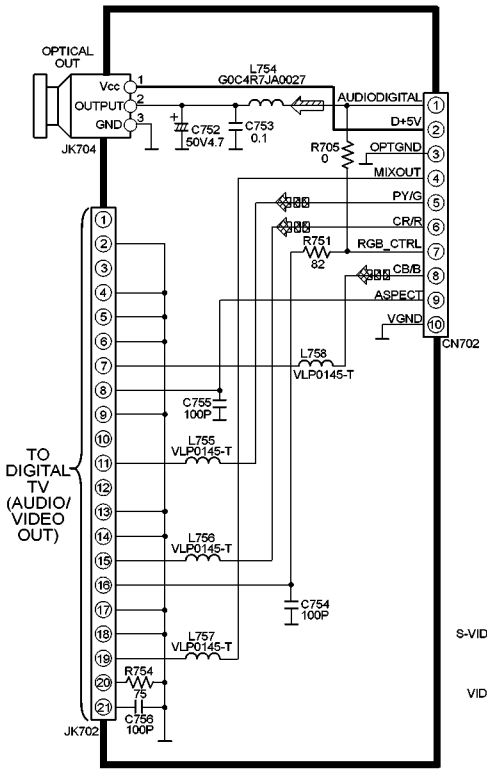


## D ASP CIRCUIT

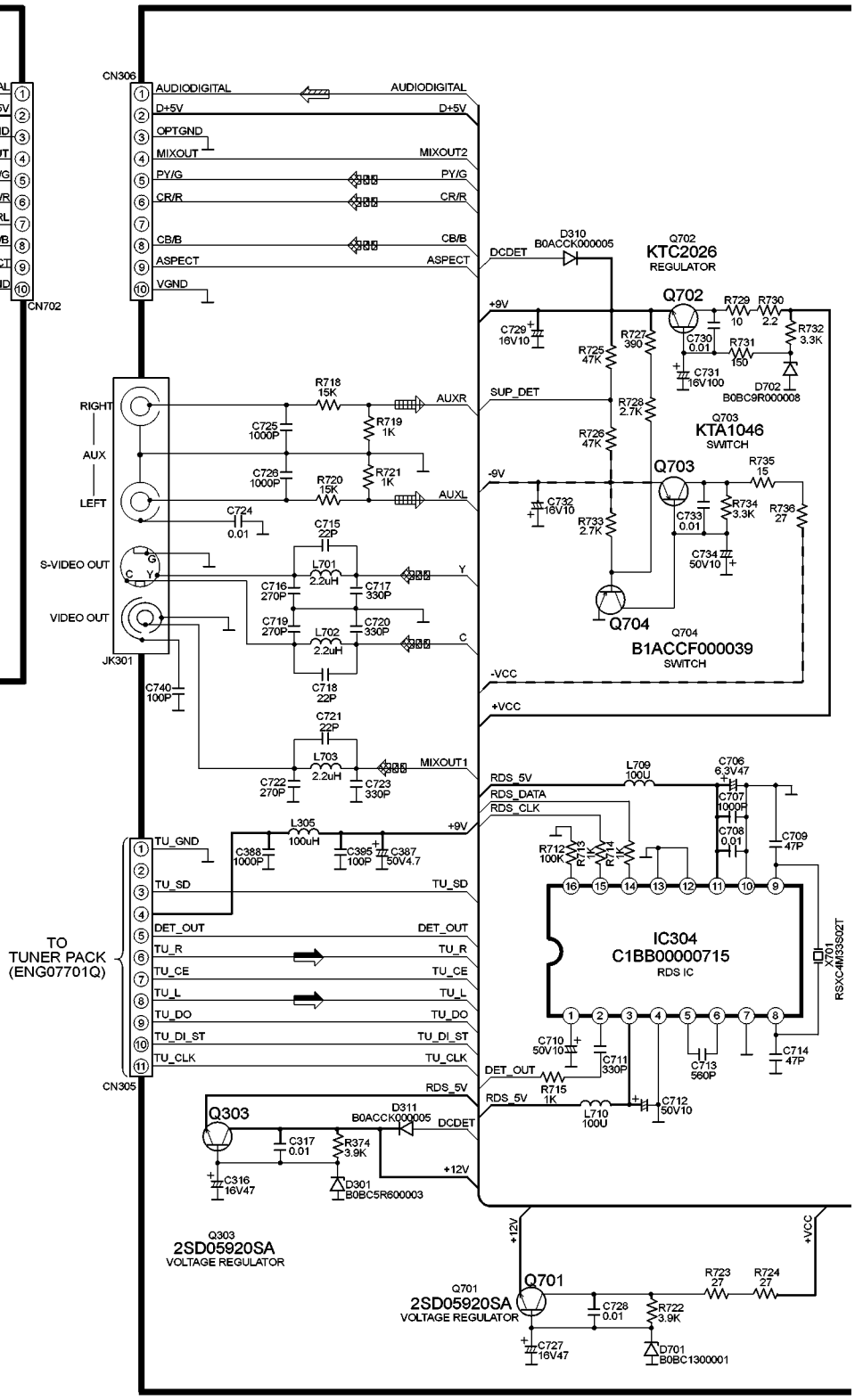

# SCHEMATIC DIAGRAM - 17

—— : +B SIGNAL LINE
– – : -B SIGNAL LINE
: AUX SIGNAL LINE
: FM/AM SIGNAL LINE
: DVD (VIDEO) SIGNAL LINE
: MAIN SIGNAL LINE

## D ASP CIRCUIT

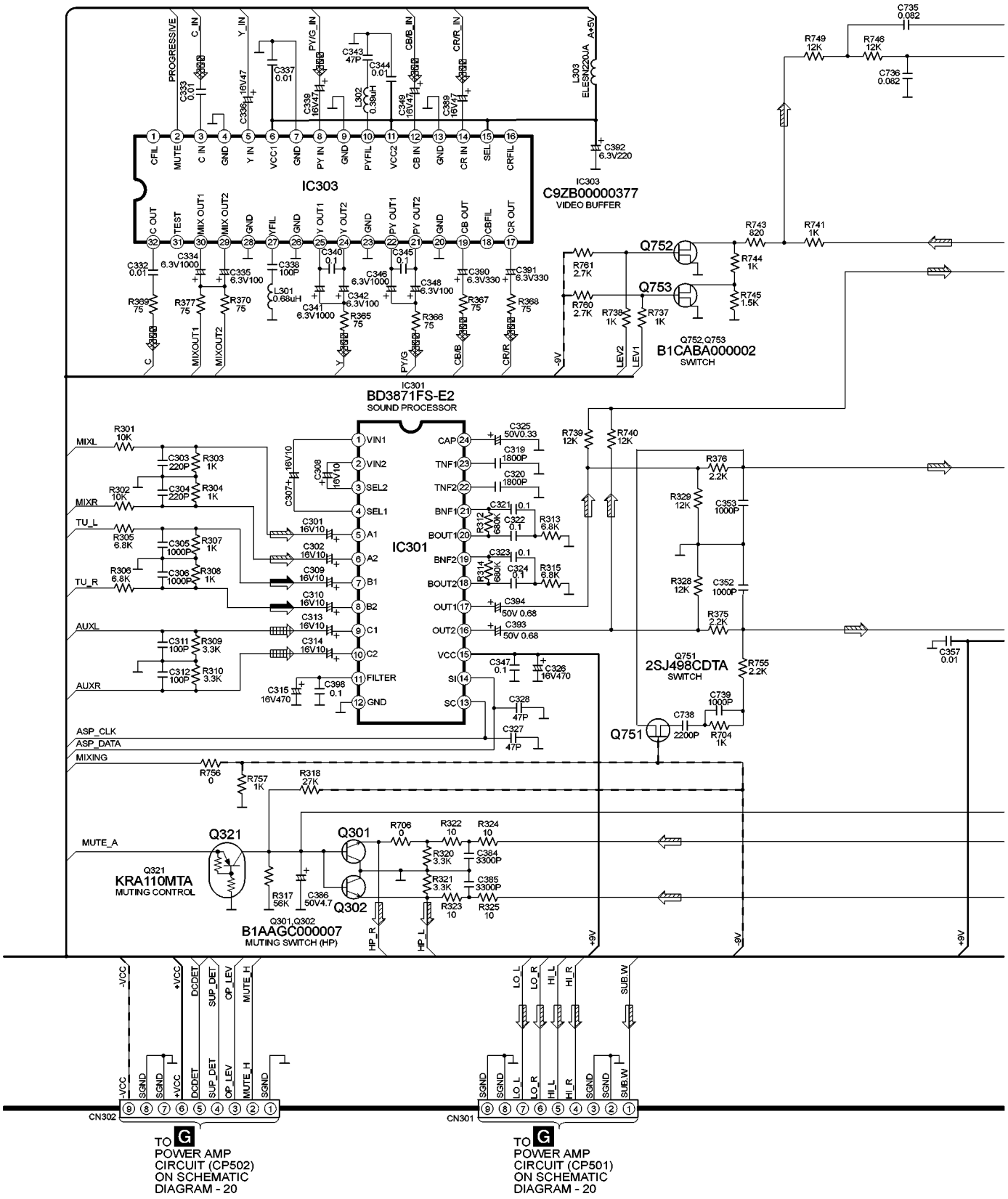

# SCHEMATIC DIAGRAM - 18

—— : +B SIGNAL LINE
– – : -B SIGNAL LINE
: DVD (VIDEO) SIGNAL LINE
: MAIN SIGNAL LINE

## D ASP CIRCUIT

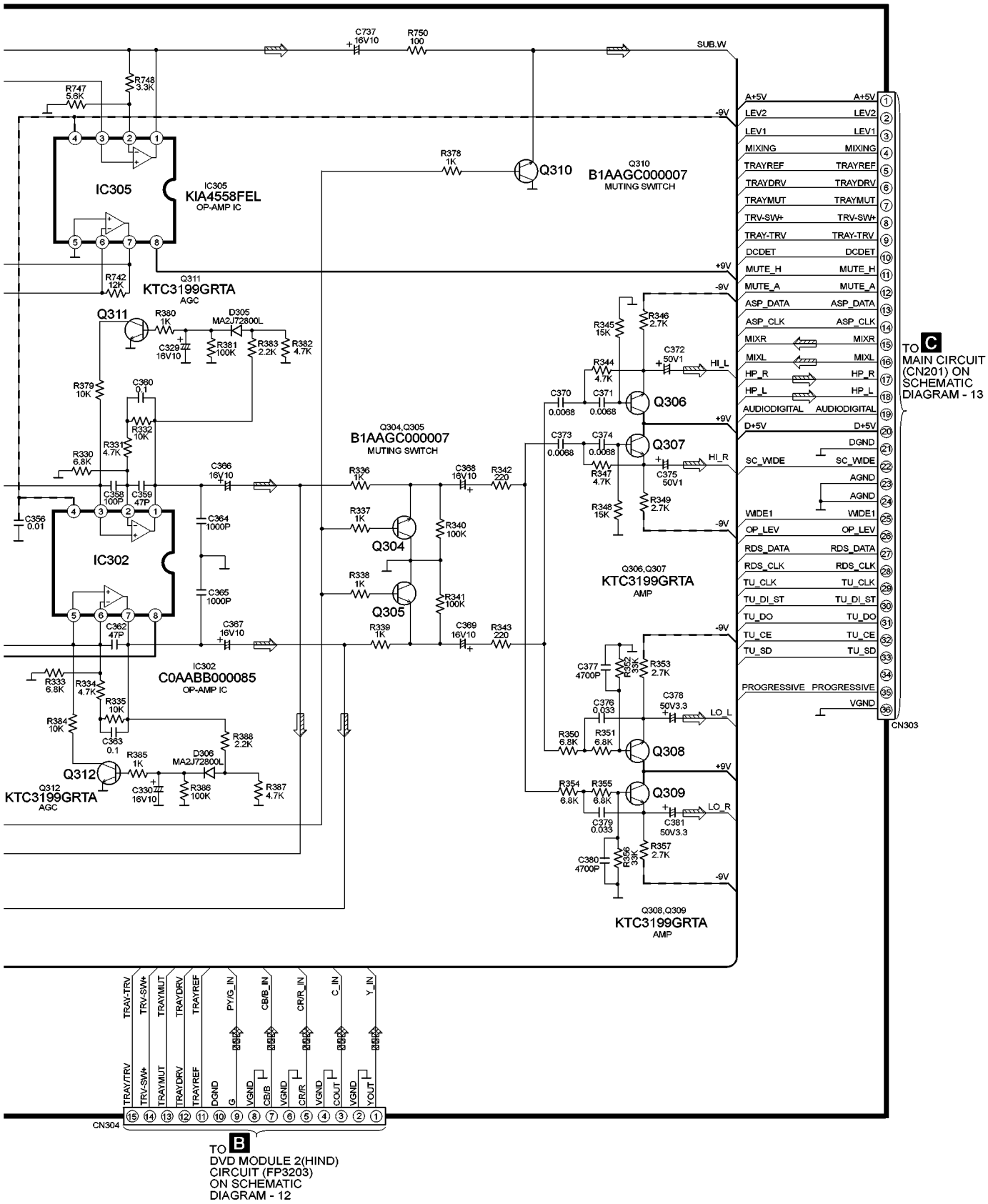

# SCHEMATIC DIAGRAM - 19

—— : +B SIGNAL LINE

– – : -B SIGNAL LINE

⇨ : MAIN SIGNAL LINE

## F PANEL CIRCUIT

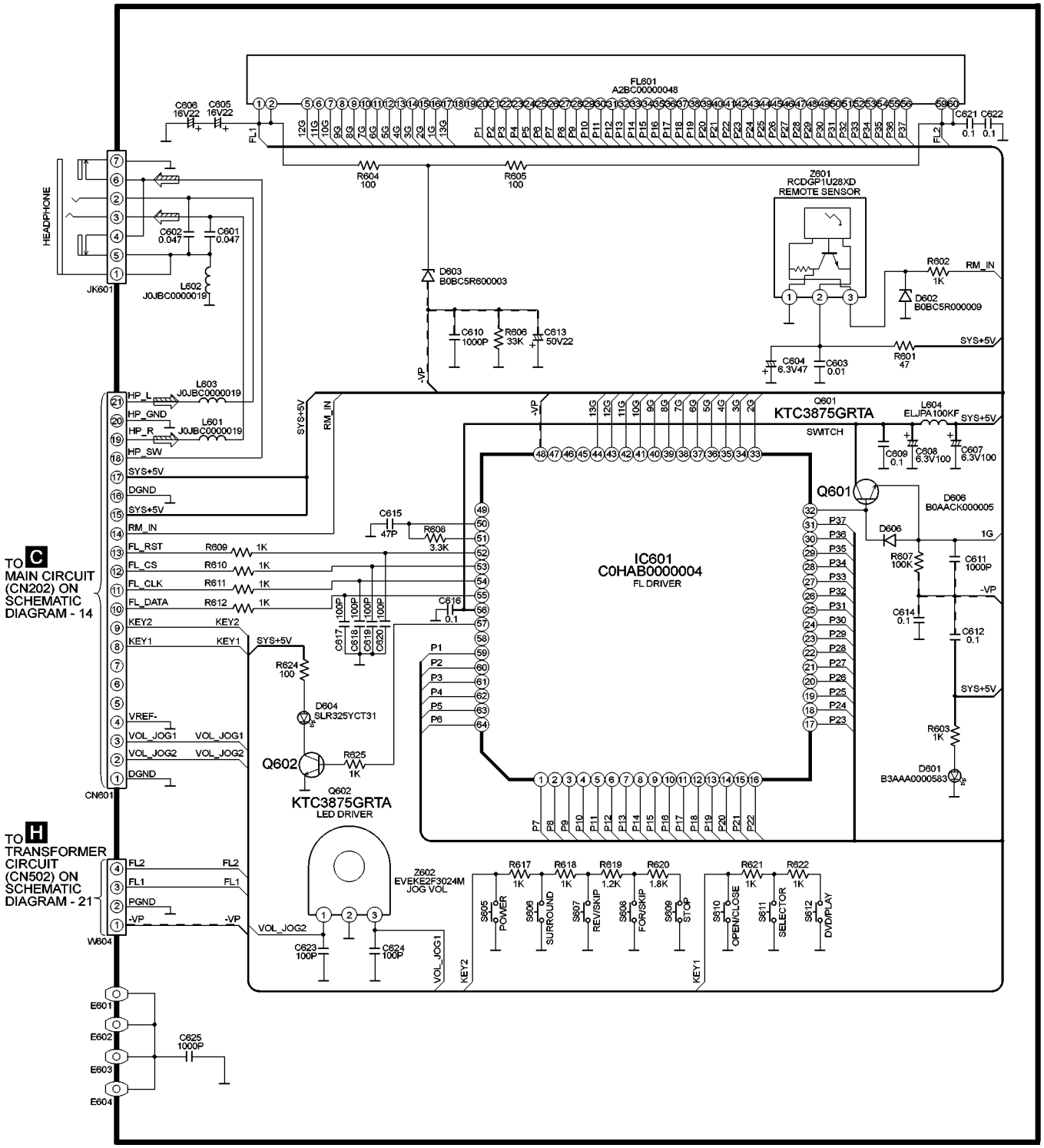

# SCHEMATIC DIAGRAM - 20

—— : +B SIGNAL LINE ⇨ : MAIN SIGNAL LINE

– – : -B SIGNAL LINE

## G POWER CIRCUIT

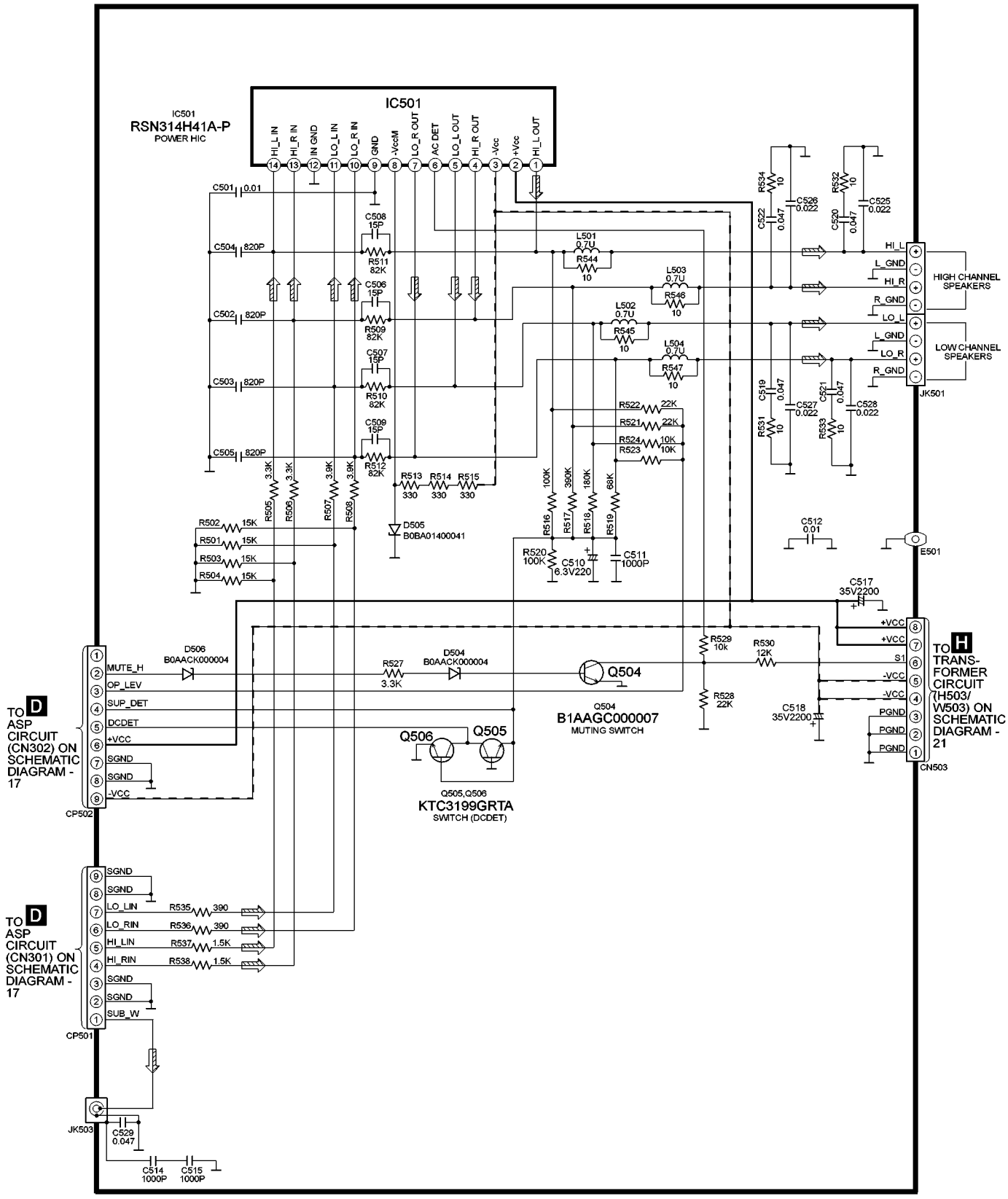

# SCHEMATIC DIAGRAM - 21

—— : +B SIGNAL LINE

– – : -B SIGNAL LINE

## H TRANSFORMER CIRCUIT

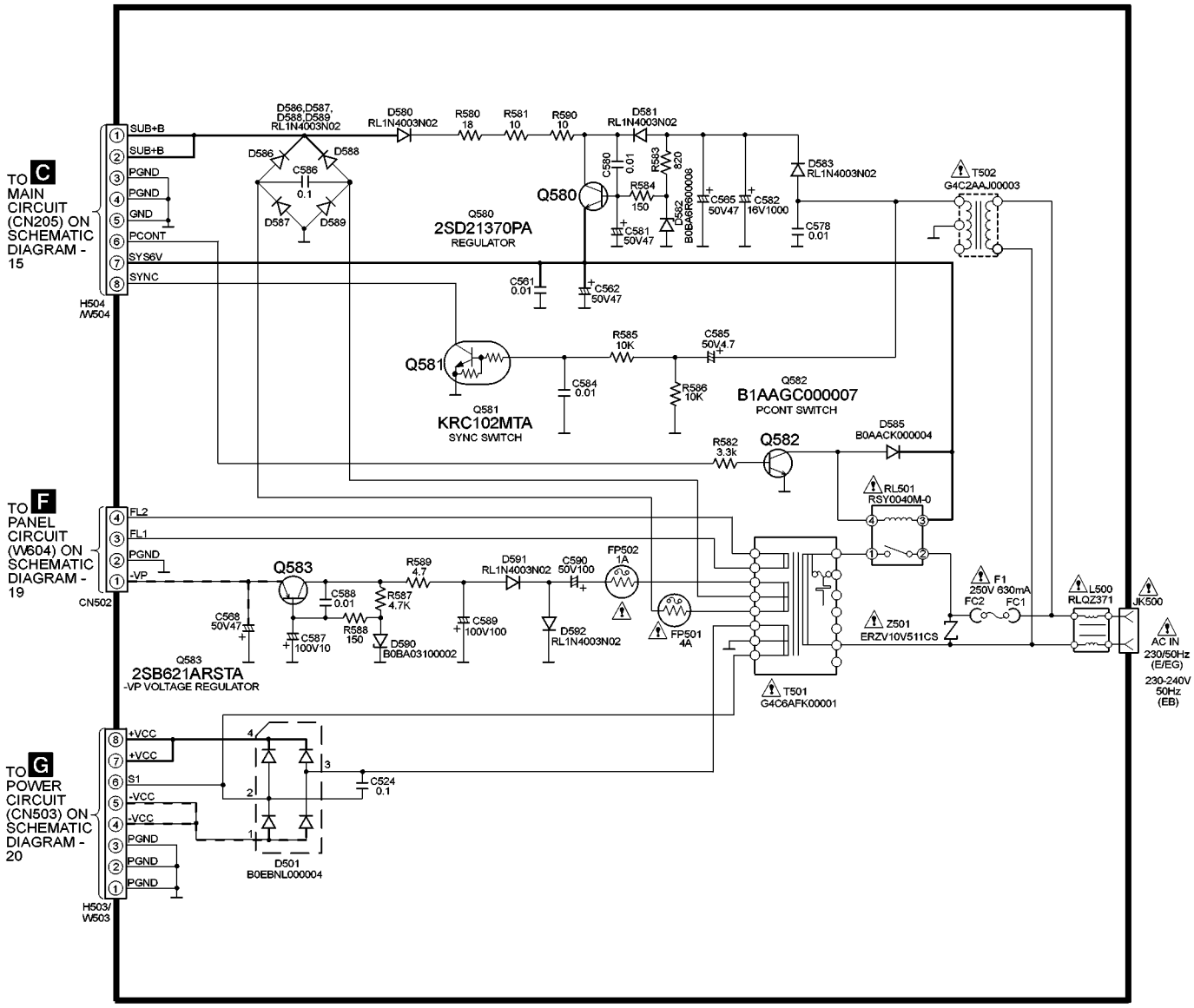

# 21 Printed Circuit Board

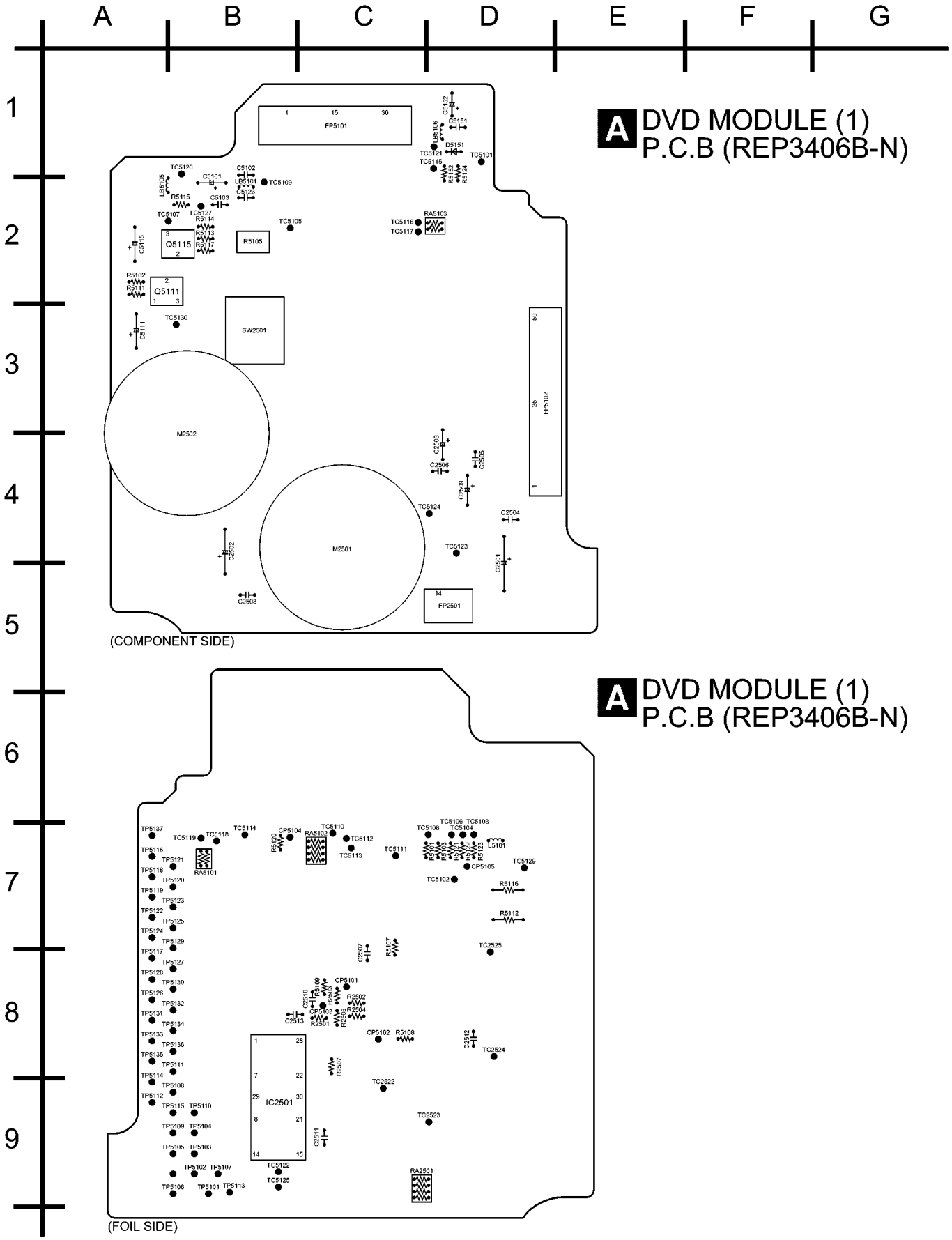

## B DVD MODULE(2) P.C.B (REPX0384B)

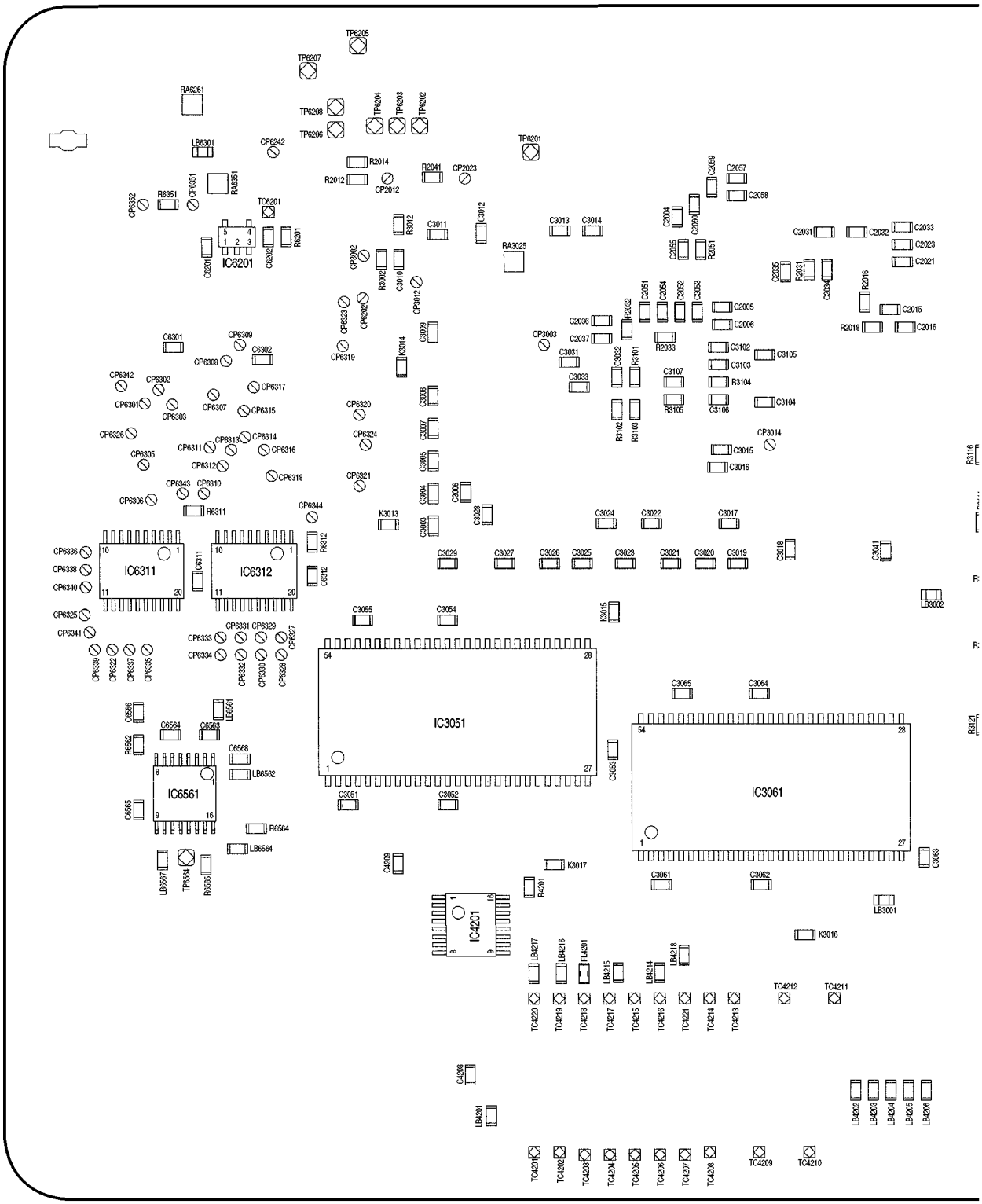


(SIDE:A)

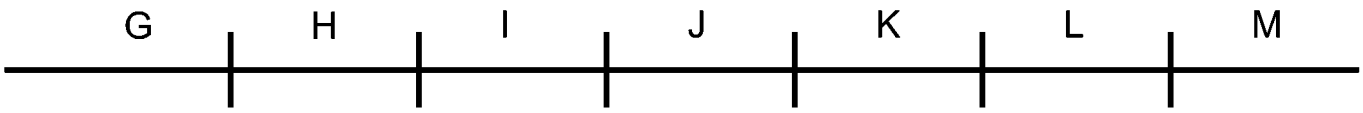
G
H
I
J
K
L
M

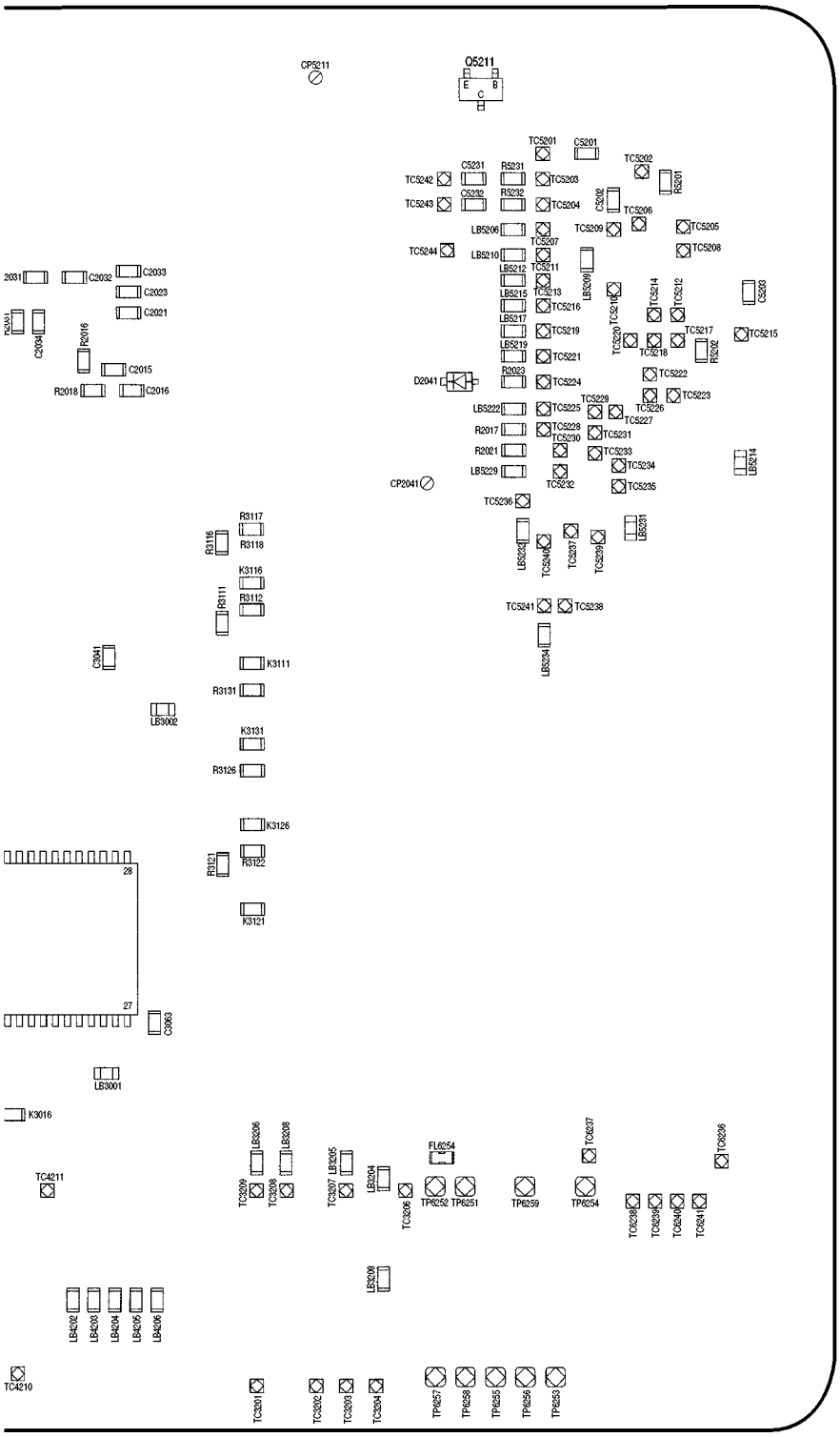
CP5211
Q5211
E
B
C
TC5201
C5201
TC5202
R5201
C5231
R5231
TC5242
TC5203
C5232
R5232
TC5243
TC5204
C5202
TC5206
LB5206
TC5209
TC5205
TC5207
TC5244
LB5210
TC5208
LB5212
TC5211
LB5209
LB5215
TC5213
TC5210
TC5214
TC5212
C5203
TC5216
LB5217
TC5219
TC5220
TC5217
TC5215
LB5219
TC5218
R5202
TC5221
R2023
TC5222
D2041
TC5224
TC5223
TC5229
TC5226
LB5222
TC5225
TC5227
R2017
TC5228
TC5231
TC5230
R2021
TC5233
LB5229
TC5234
LB5214
TC5232
CP2041
TC5235
TC5236
LB5231
LB5234
TC5240
TC5237
TC5239
TC5241
TC5238
LB5234
2031
C2032
C2033
C2023
C2021
C2034
R2016
C2015
R2018
C2016
R3117
R3118
R3116
K3116
R3111
R3112
C2041
K3111
R3131
LB3002
K3131
R3126
K3126
R3121
R3122
28
K3121
27
C3063
LB3001
K3016
LB3206
LB3208
FL6254
TC6237
TC6236
TC4211
TC3209
TC3208
TC3207
LB3205
LB3204
TP6252
TP6251
TP6259
TP6254
TC6238
TC6239
TC6240
TC6241
TC3206
LB3209
LB4202
LB4203
LB4204
LB4205
LB4206
TC4210
TC3201
TC3202
TC3203
TC3204
TP6257
TP6258
TP6255
TP6256
TP6253

A B C D E F G

1 2 3 4 5 6 7 8 9

## B DVD MODULE(2) P.C.B (REPX0384B)

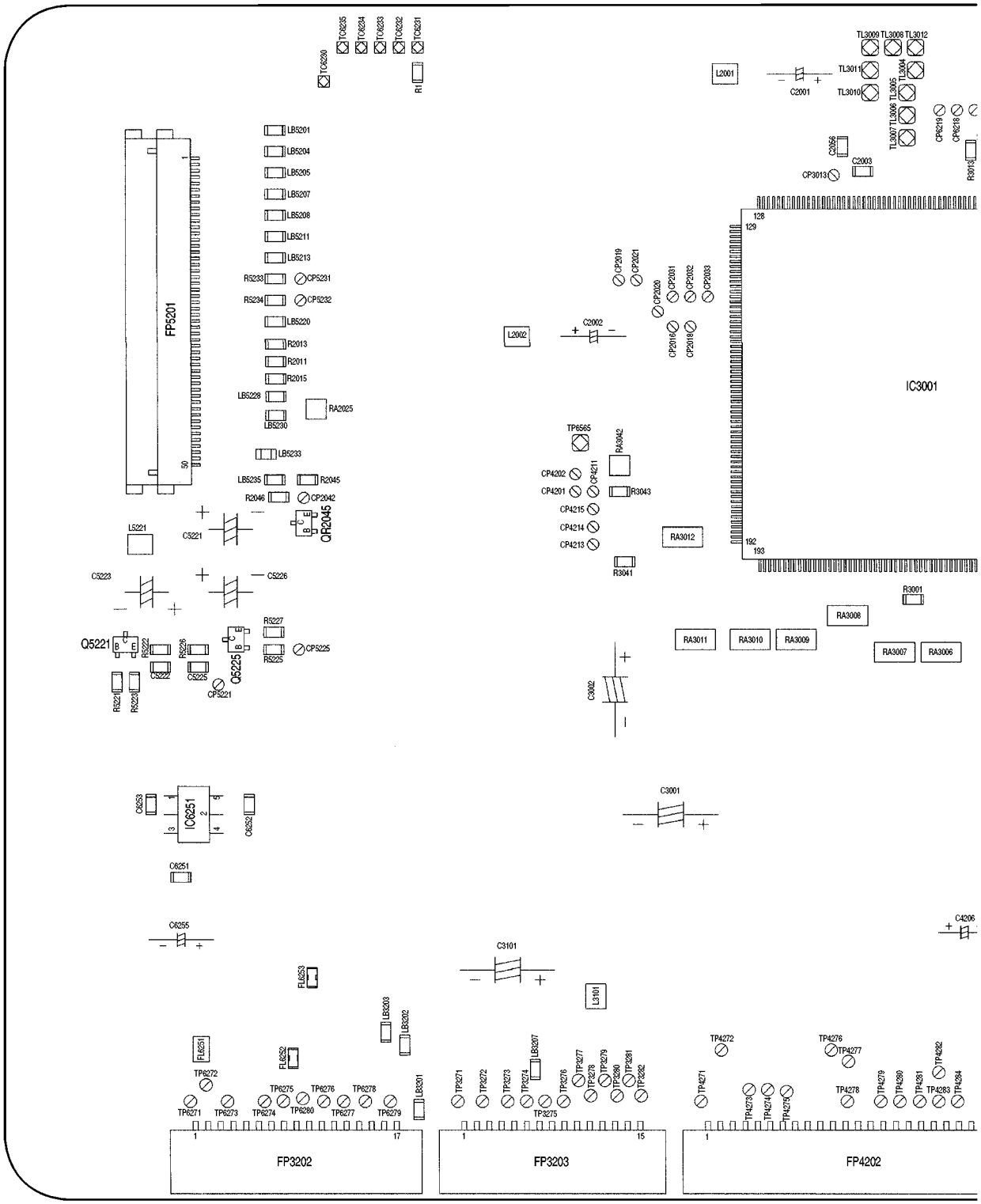


(SIDE:B)

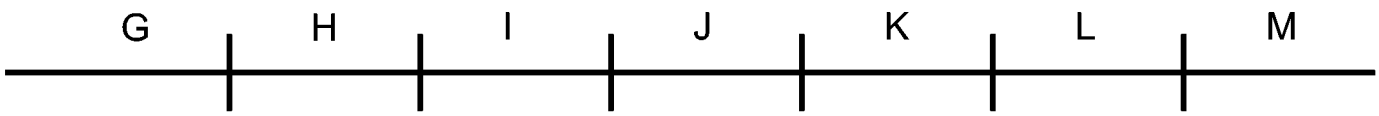
G
H
I
J
K
L
M

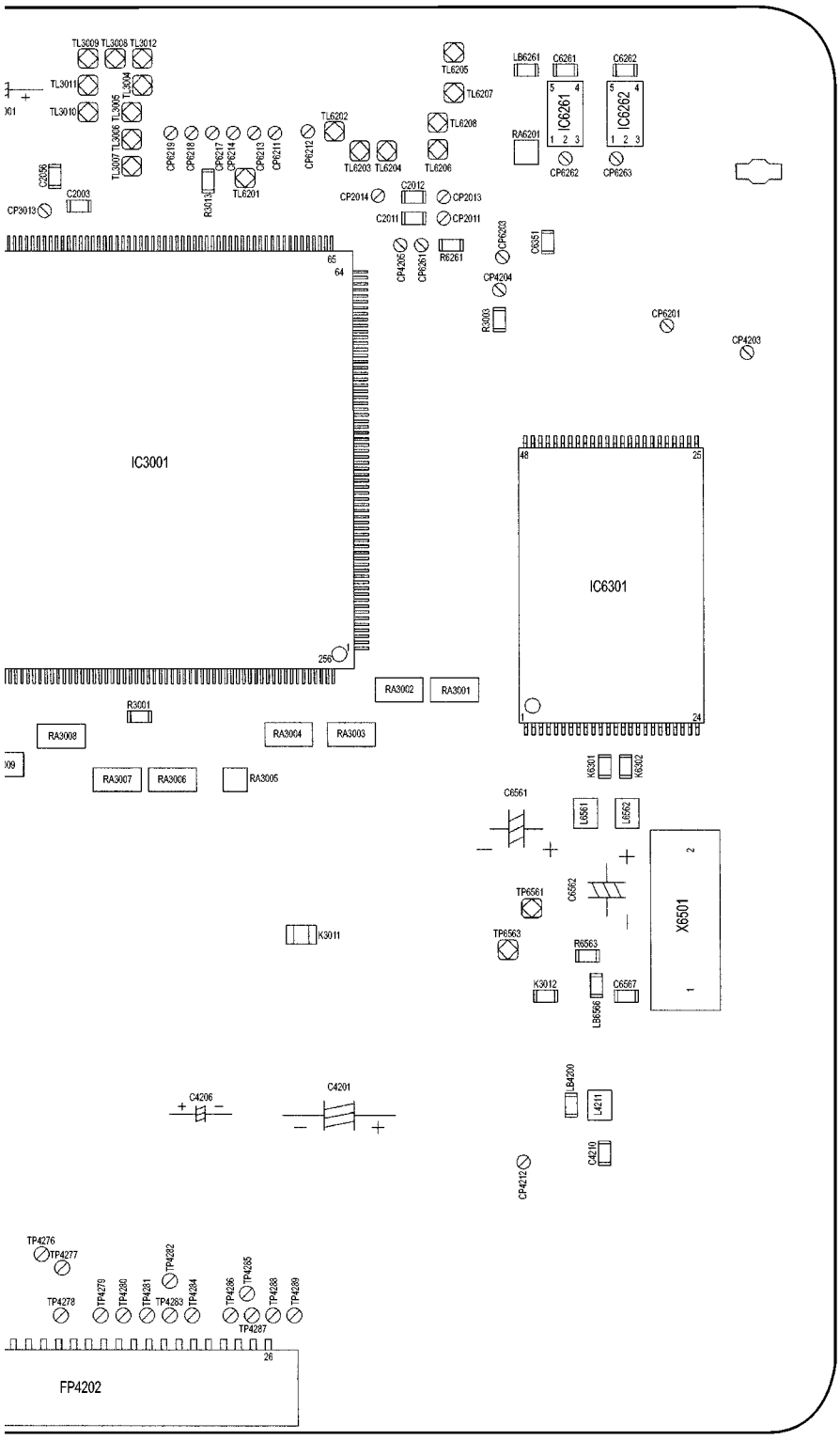
IC3001
IC6301
IC6261
IC6262
X6501
FP4202
RA3001
RA3002
RA3003
RA3004
RA3005
RA3006
RA3007
RA3008
RA6201
TL3009
TL3008
TL3012
TL3011
TL3010
TL3004
TL3005
TL3006
TL3007
TL6205
TL6207
TL6208
TL6206
TL6202
TL6203
TL6204
TL6201
LB6261
C6261
C6262
CP6262
CP6263
CP6219
CP6218
CP6217
CP6214
CP6213
CP6211
CP6212
C2056
C2003
CP3013
R3013
CP2014
C2012
CP2013
C2011
CP2011
CP4205
CP6261
R6261
CP6203
C6351
CP4204
R3003
CP6201
CP4203
R3001
K6301
K6302
C6561
L6561
L6562
TP6561
C6562
TP6563
R6563
K3011
K3012
C6567
LB6566
C4206
C4201
LB4209
L4211
C4210
CP4212
TP4276
TP4277
TP4278
TP4279
TP4280
TP4281
TP4282
TP4283
TP4284
TP4286
TP4285
TP4287
TP4288
TP4289

## C MAIN P.C.B (REPX0345B)

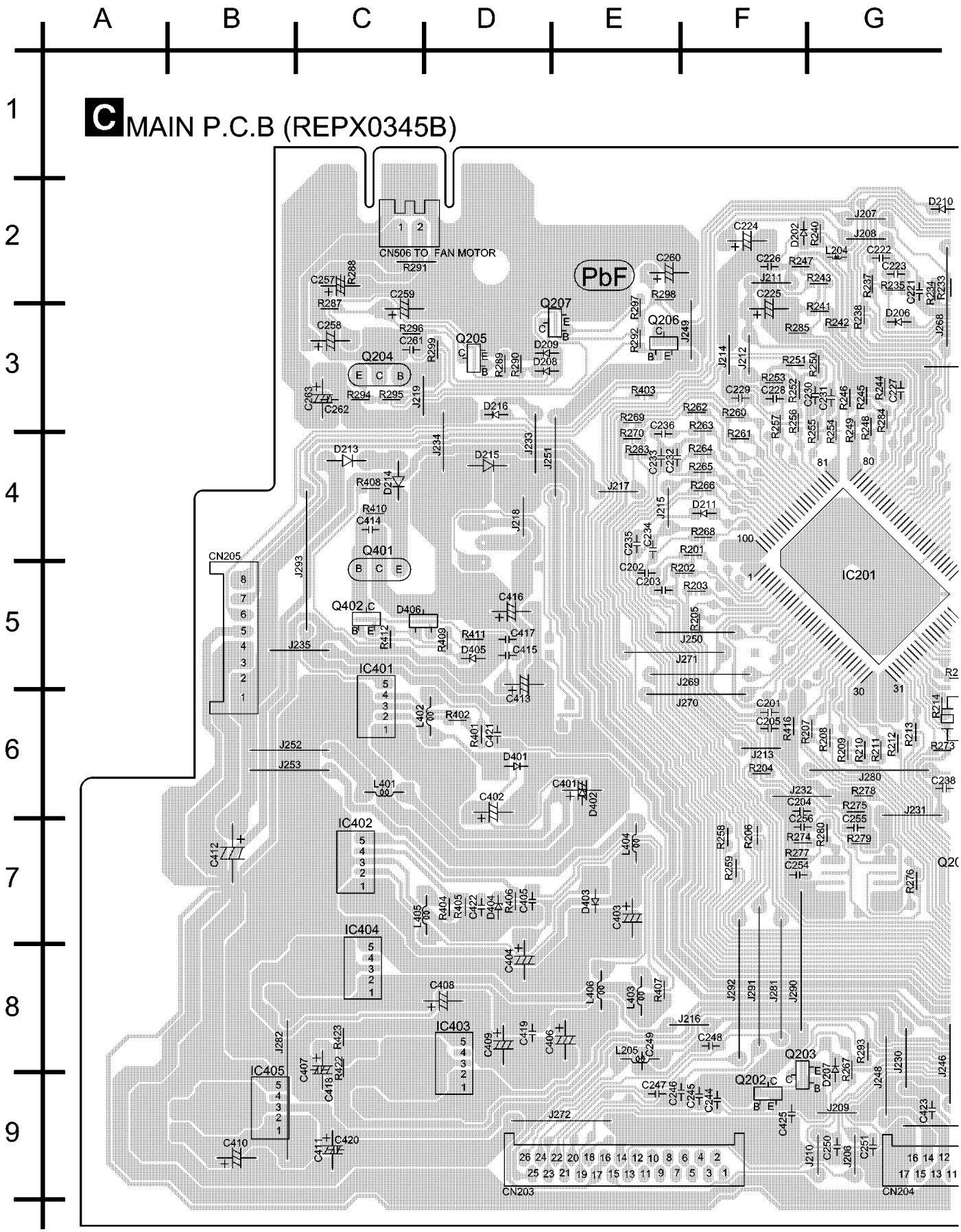

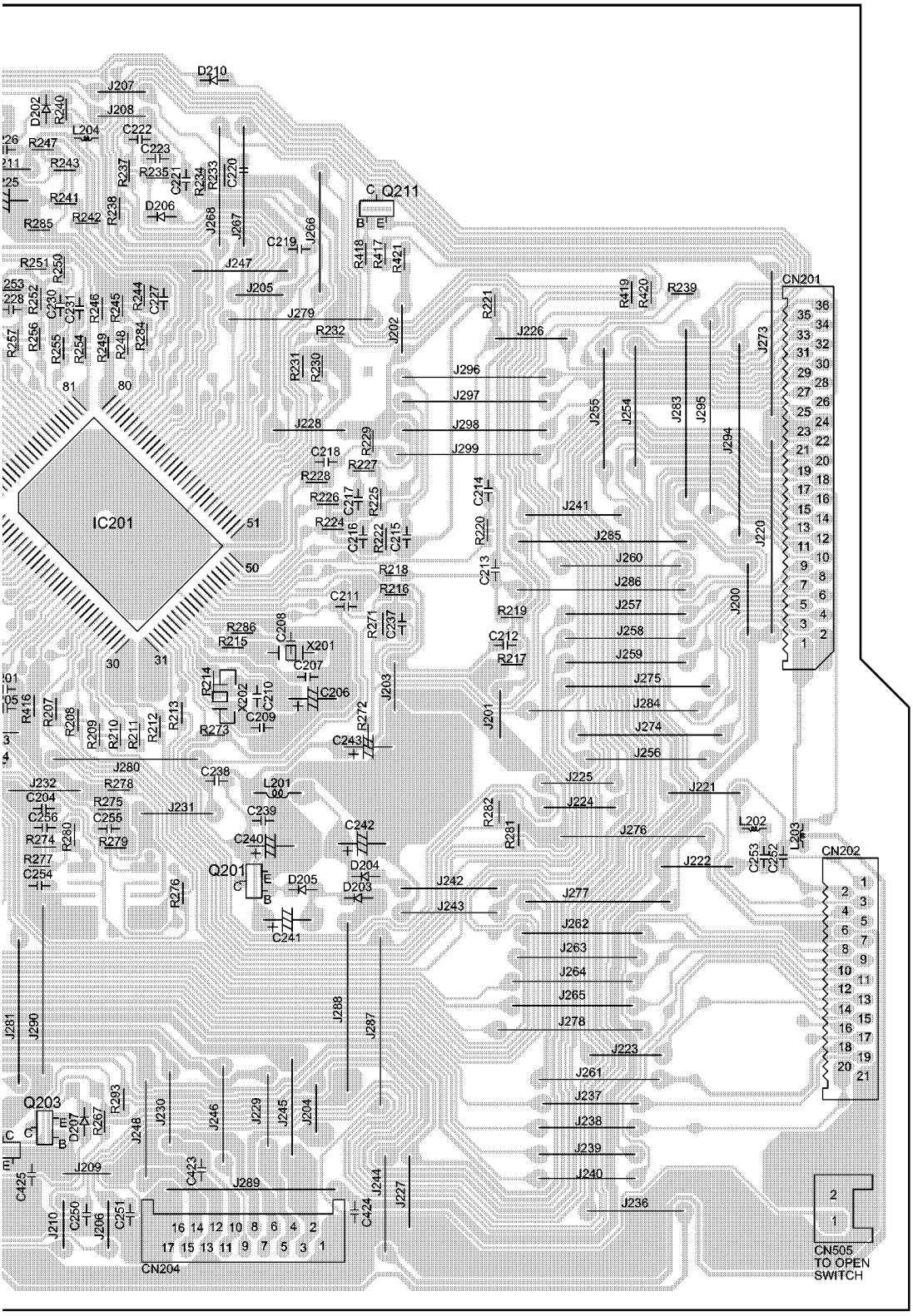
G
H
I
J
K
L
M
IC201
Q211
Q201
Q203
CN201
CN202
CN204
CN505
TO OPEN
SWITCH

# D ASP P.C.B (REPX0347B)

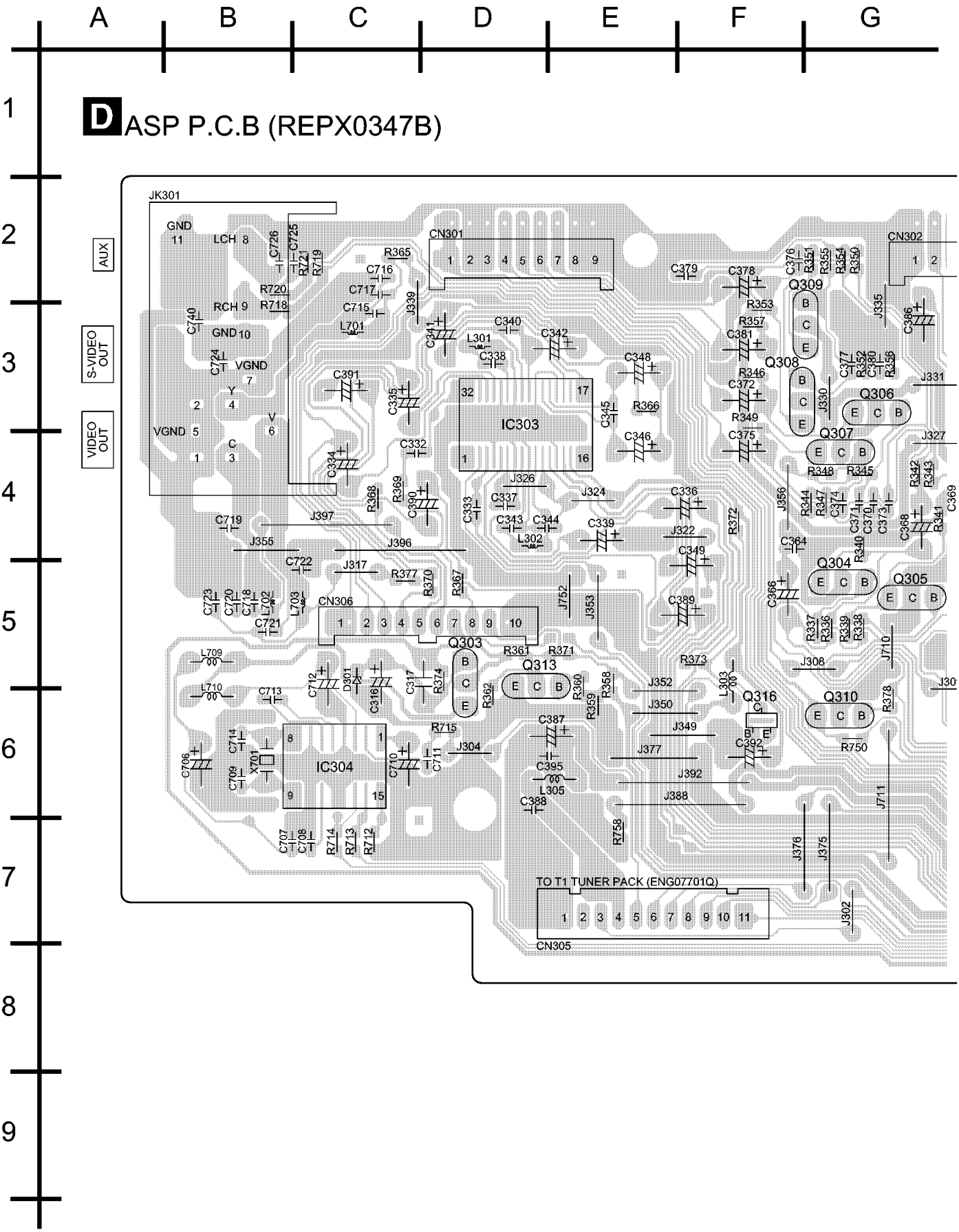

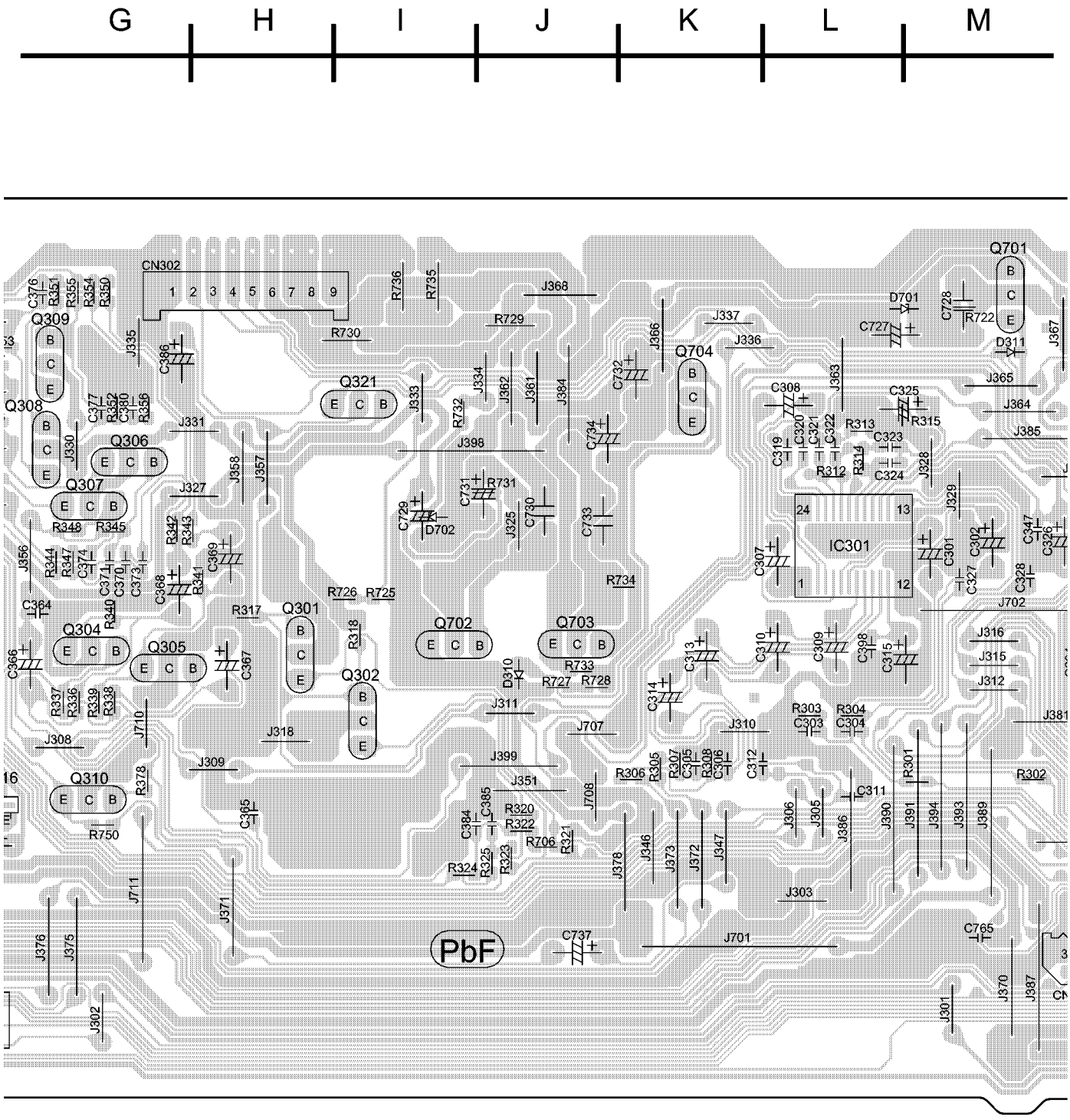
G
H
I
J
K
L
M
CN302
Q309
Q308
Q306
Q307
Q321
Q304
Q305
Q301
Q302
Q702
Q703
Q704
Q701
Q310
IC301
PbF

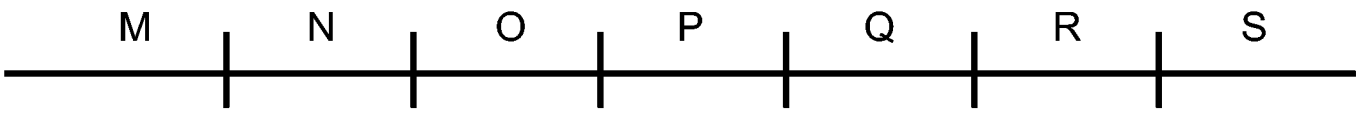
M
N
O
P
Q
R
S

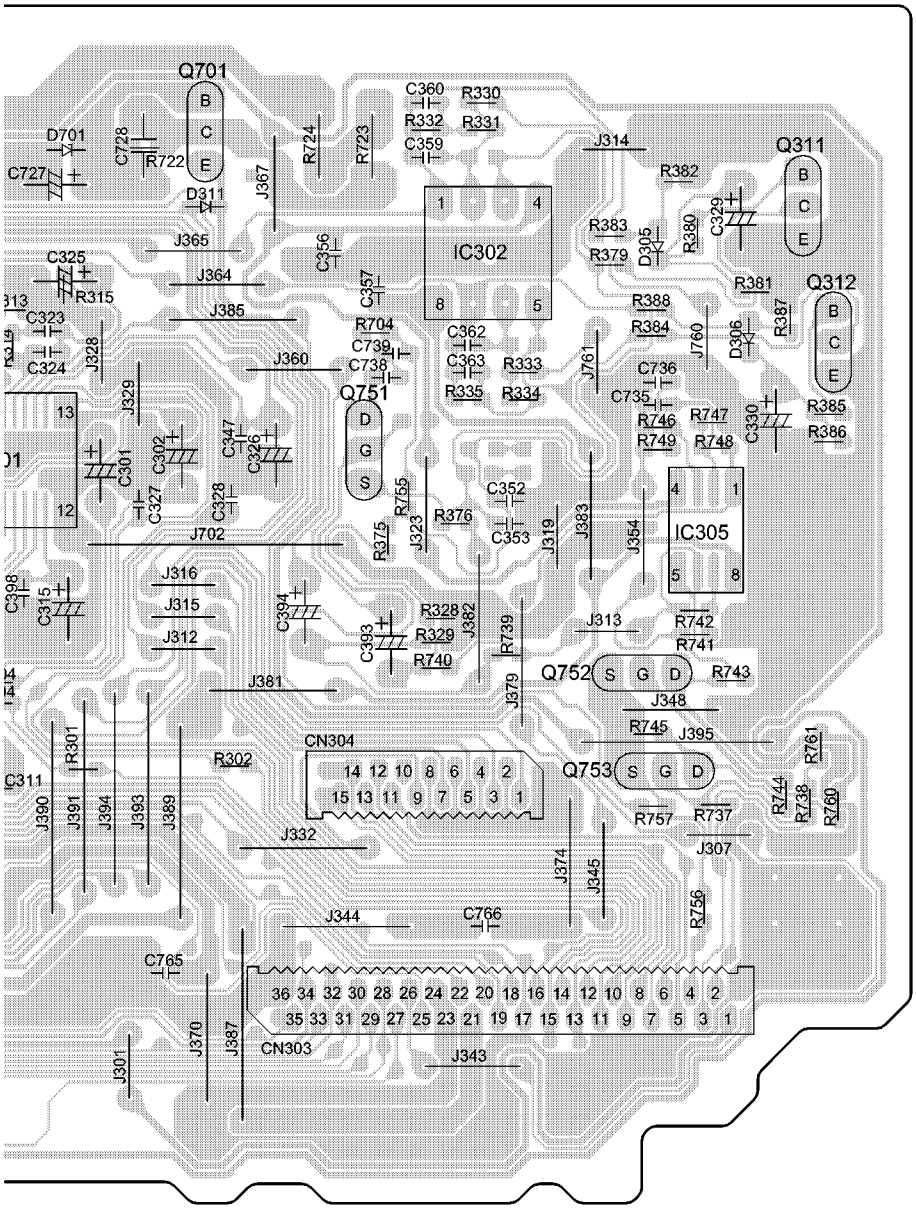
Q701
Q311
Q312
Q751
Q752
Q753
IC302
IC305
CN304
CN303
D701
D311
D305
D306
C727
C728
R722
R724
R723
C360
R330
R332
R331
C359
J314
R382
C329
R380
R383
R379
C325
R315
J365
J364
J385
C356
C357
R704
C739
C738
C362
C363
R333
R335
R334
R388
R384
J760
R387
R381
C323
C324
J328
J329
J360
J761
C736
C735
R746
R749
R747
R748
C330
R385
R386
C301
C302
C347
C326
C327
C328
R755
R375
J323
R376
C352
C353
J319
J383
J354
J702
C398
C315
J316
J315
J312
C394
C393
R328
R329
R740
J382
R739
J313
R742
R741
R743
J348
J381
J379
R745
J395
R761
R302
R301
C311
J390
J391
J394
J393
J389
R757
R737
R744
R738
R760
J307
J332
J374
J345
R756
J344
C766
C765
J370
J387
J301
J343

# E SCART TERMINAL P.C.B (REPX0347B)

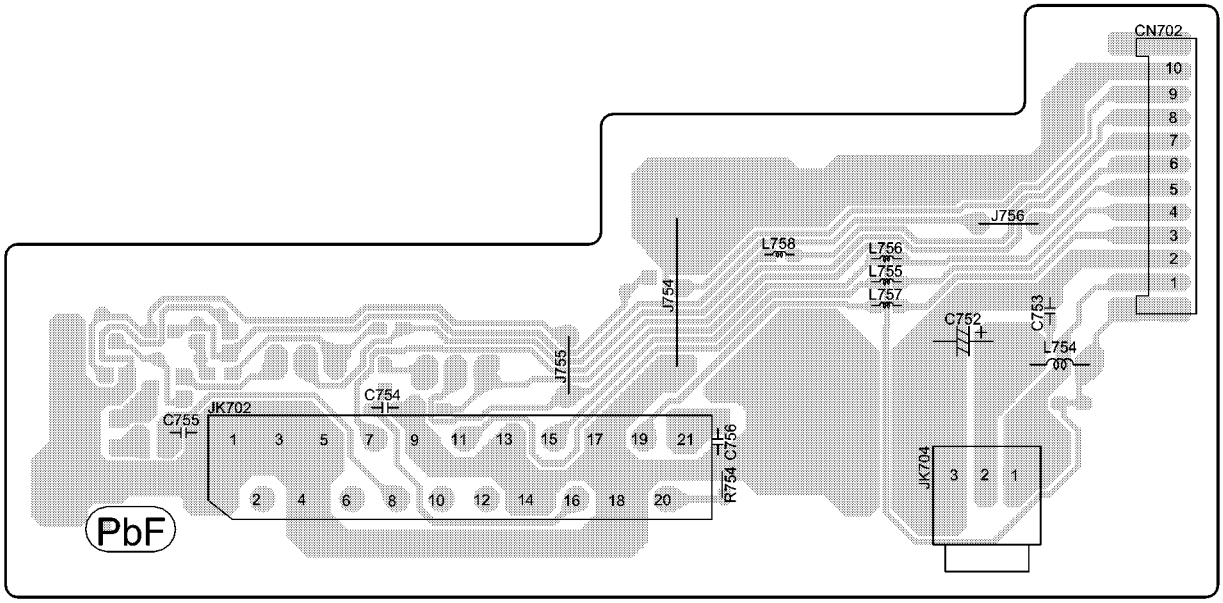


AUDIO VIDEO OUT

OPTICAL OUT

# F PANEL P.C.B (REPX0346A)

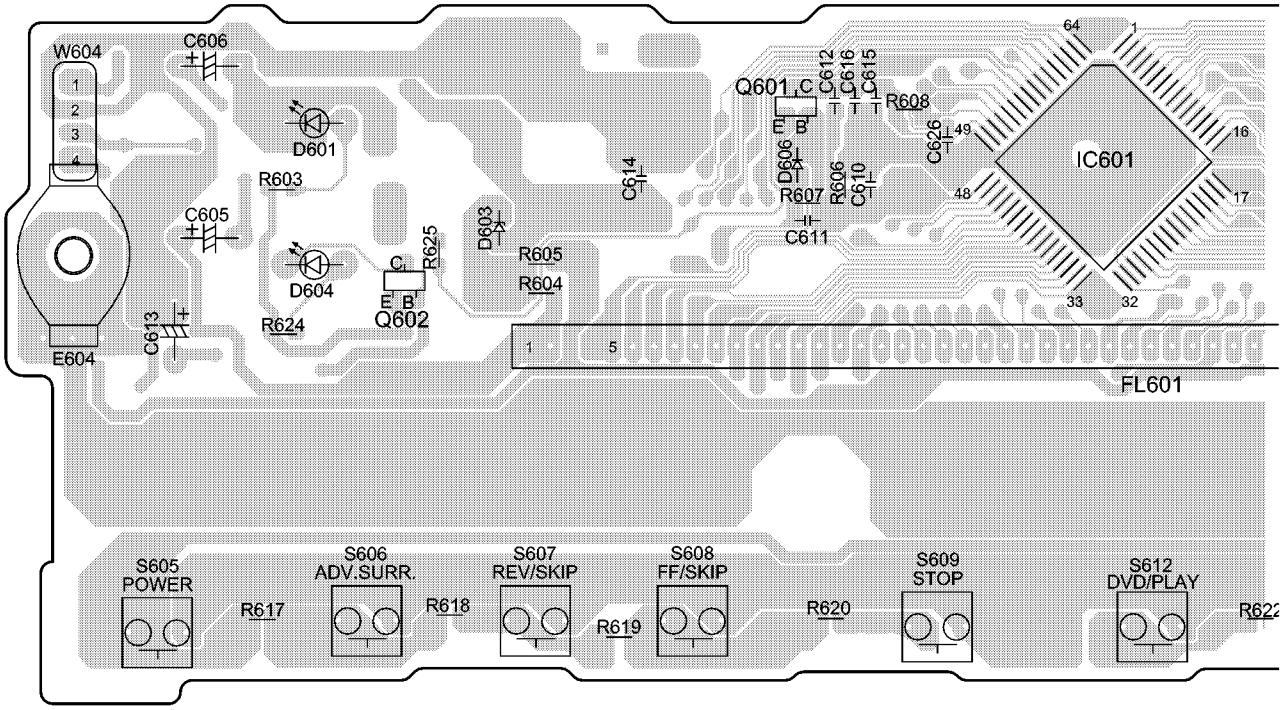

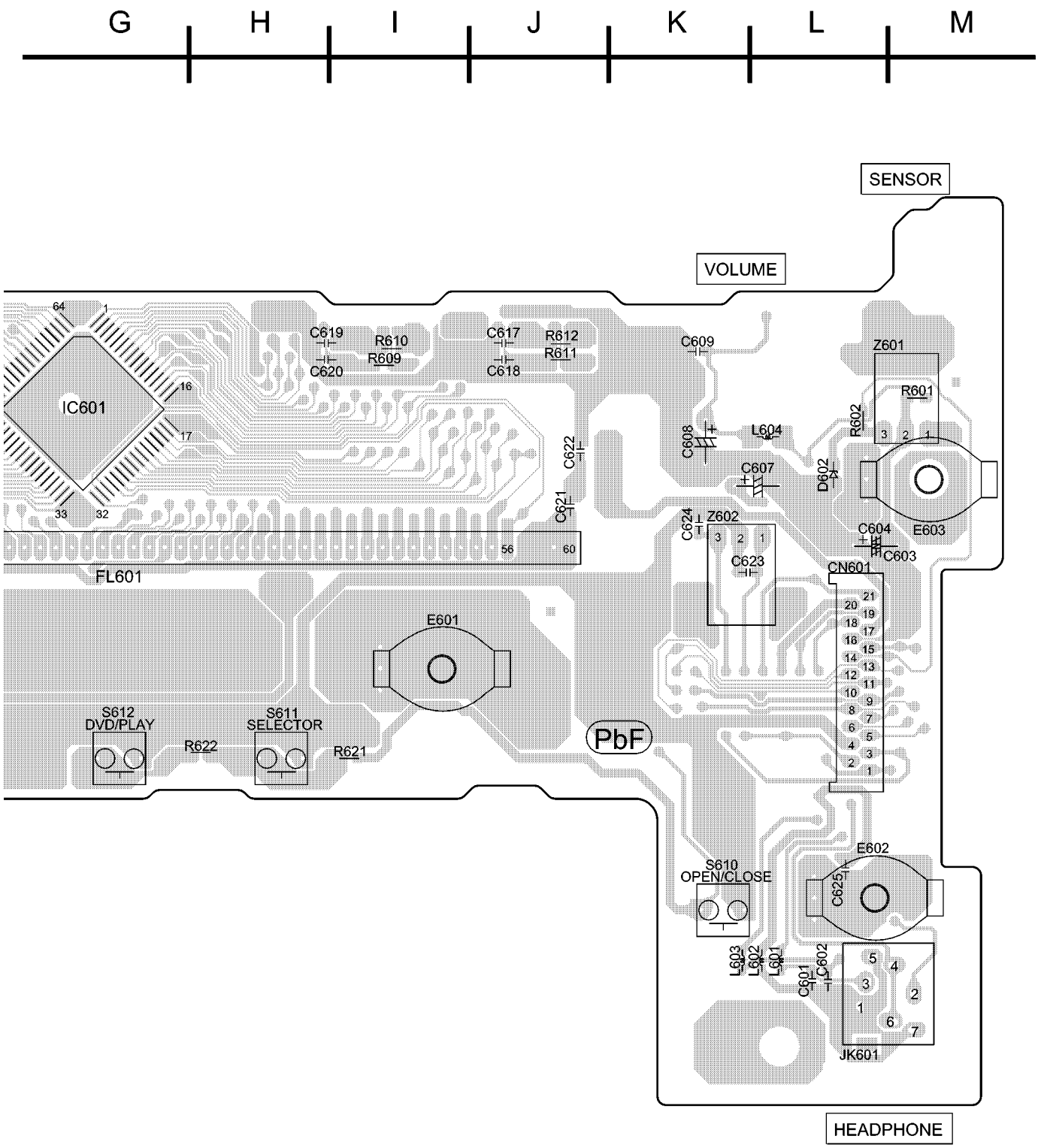
G
H
I
J
K
L
M
SENSOR
VOLUME
IC601
64
1
16
17
33
32
C619
C620
R610
R609
C617
C618
R612
R611
C609
Z601
R601
R602
C608
L604
C607
D602
C622
C621
C624
Z602
C623
C604
C603
E603
FL601
56
60
CN601
E601
S612
DVD/PLAY
R622
S611
SELECTOR
R621
PbF
S610
OPEN/CLOSE
E602
C625
L603
L602
L601
C601
C602
JK601
HEADPHONE

# G POWER P.C.B (REPX0344B)

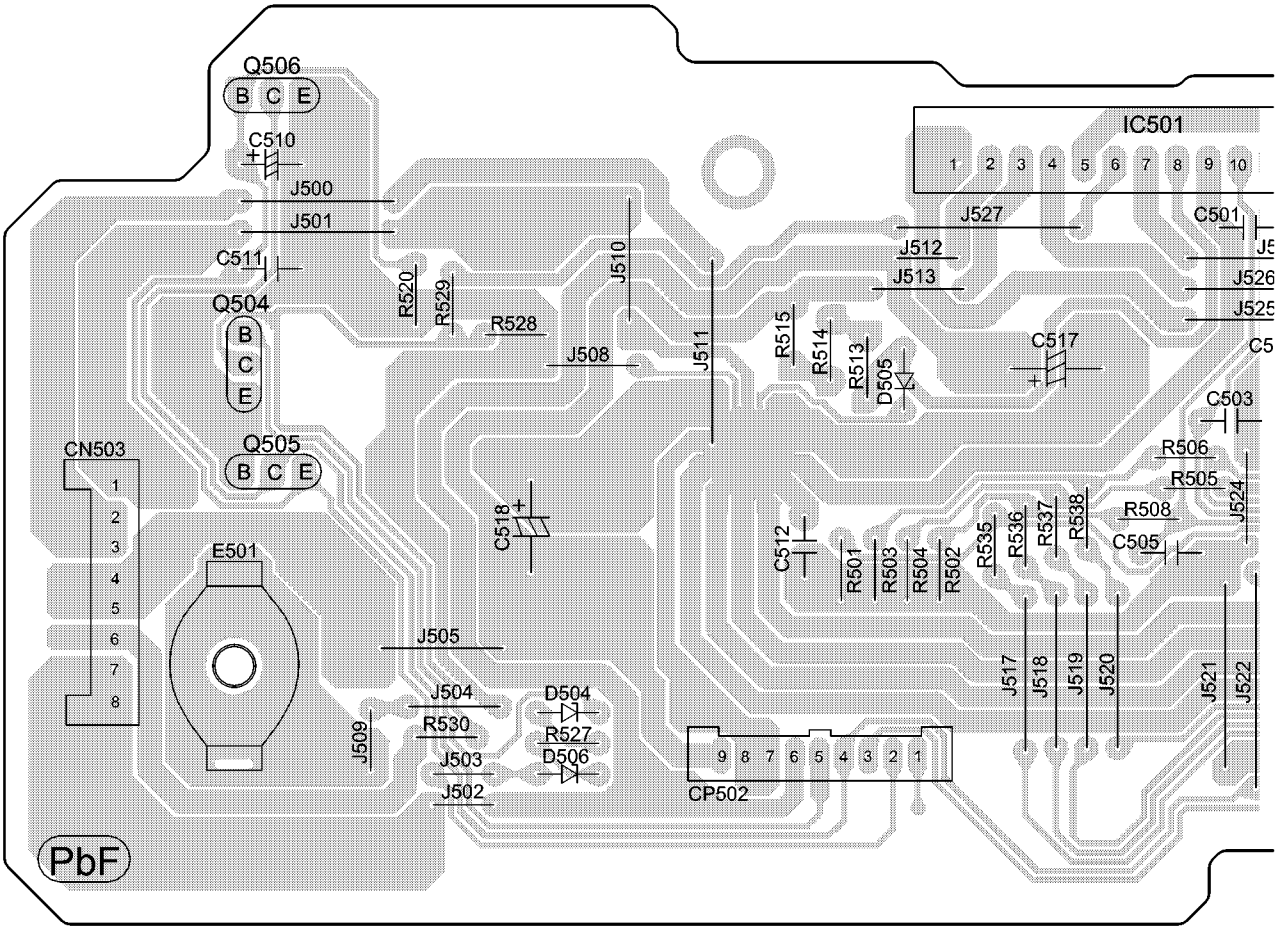

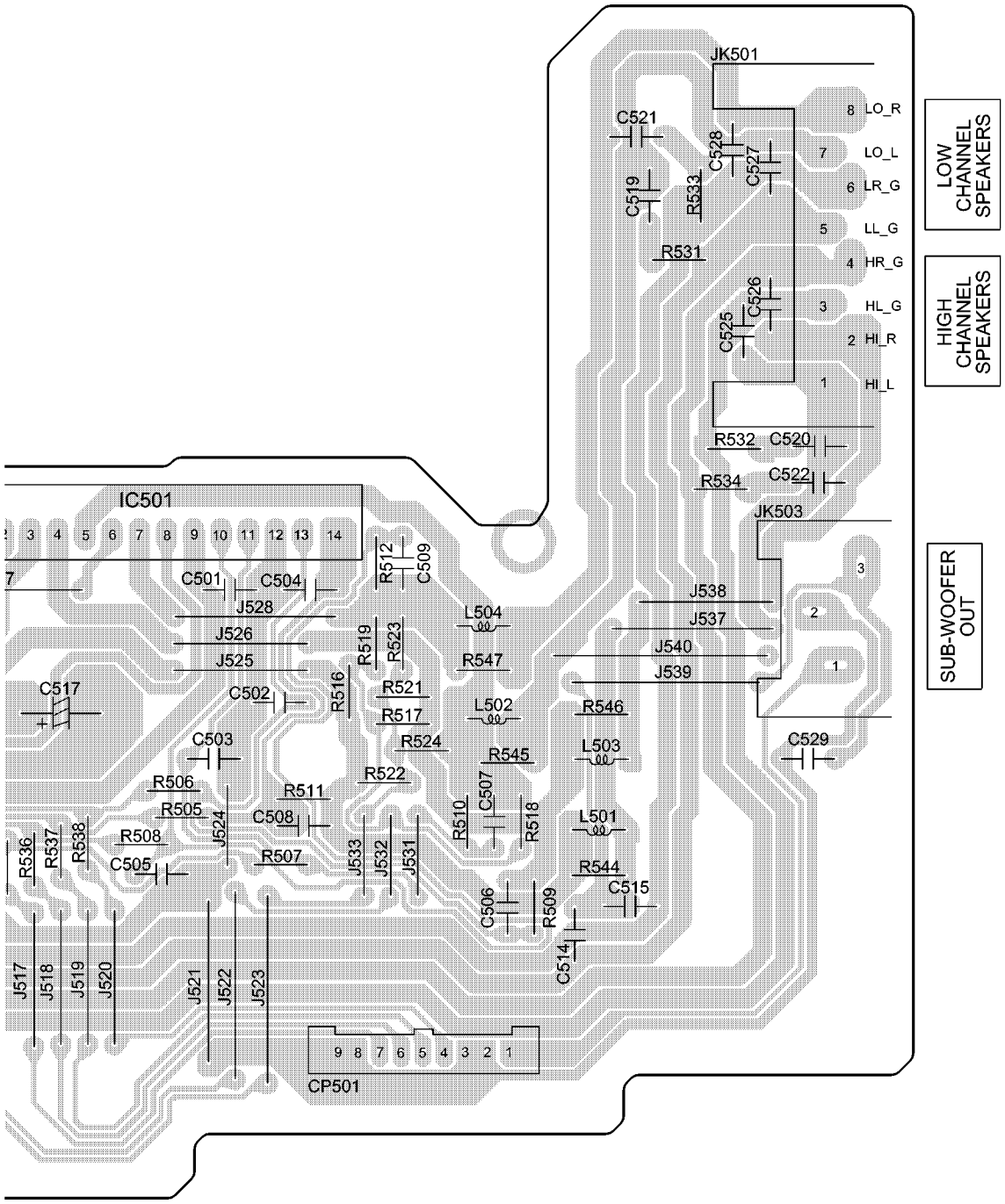
G
H
I
J
K
L
M
JK501
8 LO_R
7 LO_L
6 LR_G
5 LL_G
4 HR_G
3 HL_G
2 HI_R
1 HI_L
LOW CHANNEL SPEAKERS
HIGH CHANNEL SPEAKERS
SUB-WOOFER OUT
JK503
IC501
CP501
C521
C528
C527
C519
R533
R531
C526
C525
R532
C520
R534
C522
C529
C501
C504
J528
J526
J525
R512
C509
R519
R523
R516
L504
R547
R521
R517
L502
R524
R545
R522
R546
L503
L501
R544
C515
C514
C517
C502
C503
R506
R505
R508
C505
R536
R537
R538
J524
R511
C508
R507
J533
J532
J531
R510
C507
R518
C506
R509
J538
J537
J540
J539
J517
J518
J519
J520
J521
J522
J523

# H TRANSFORMER P.C.B (REPX0344B)

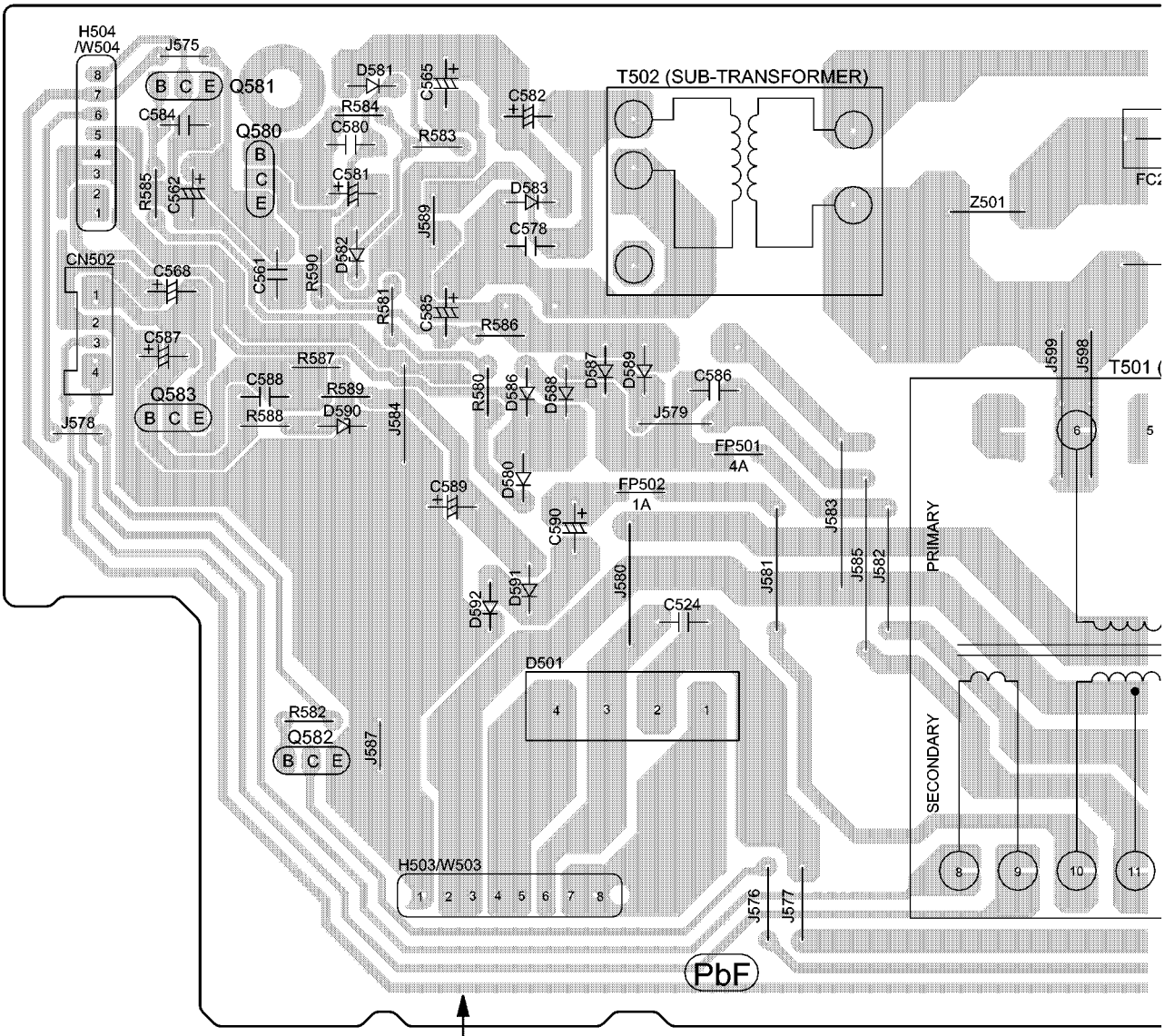


CAUTION
RISK OF ELECTRIC SHOCK
AC VOLTAGE LINE.
PLEASE DO NOT TOUCH THIS P.C.B

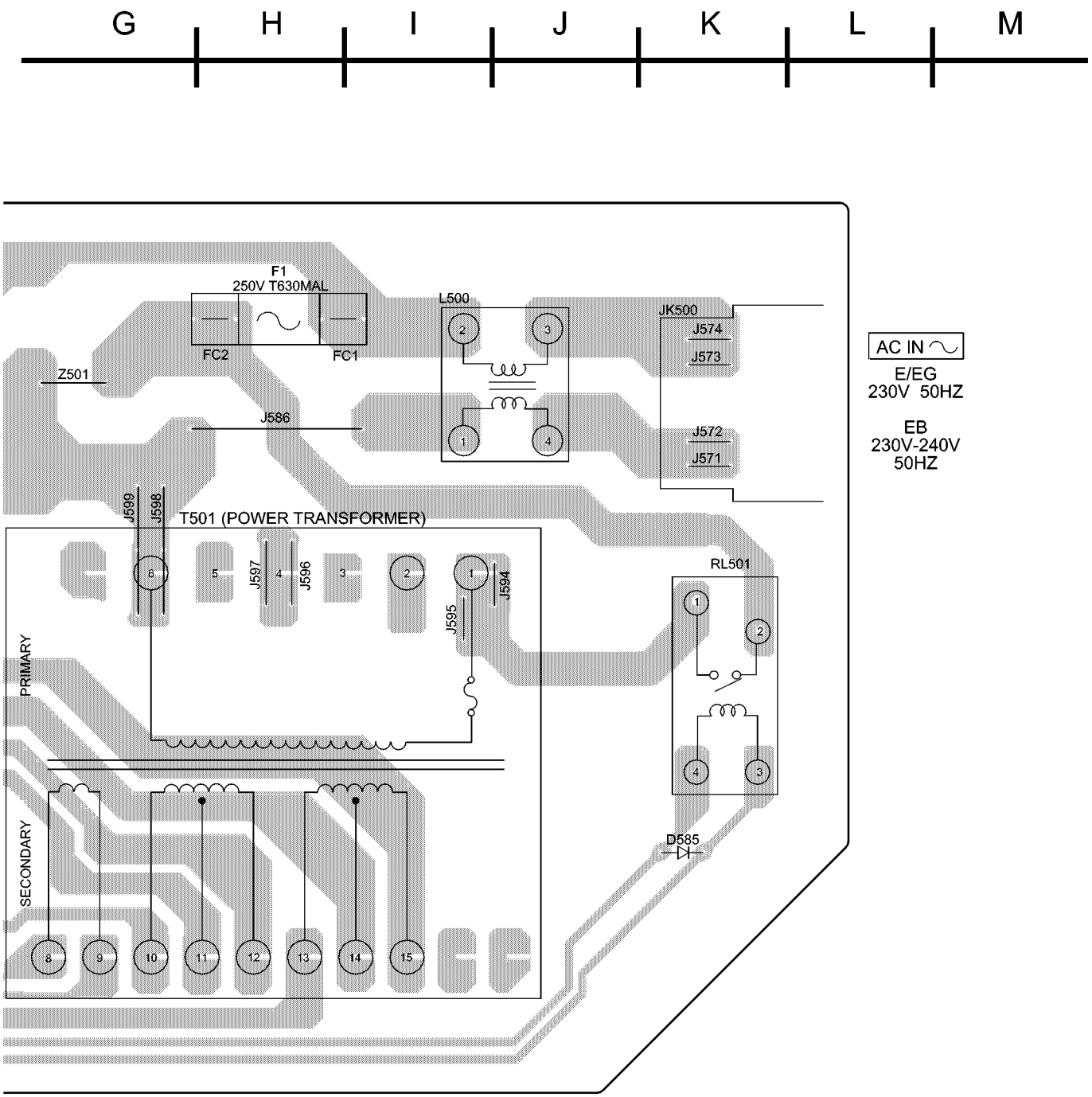
G
H
I
J
K
L
M
F1
250V T630MAL
FC2
FC1
L500
JK500
J574
J573
J572
J571
Z501
J586
J599
J598
T501 (POWER TRANSFORMER)
J597
J596
J595
J594
RL501
PRIMARY
SECONDARY
D585
AC IN
E/EG
230V 50HZ
EB
230V-240V
50HZ

# 22 Wiring Connection Diagram

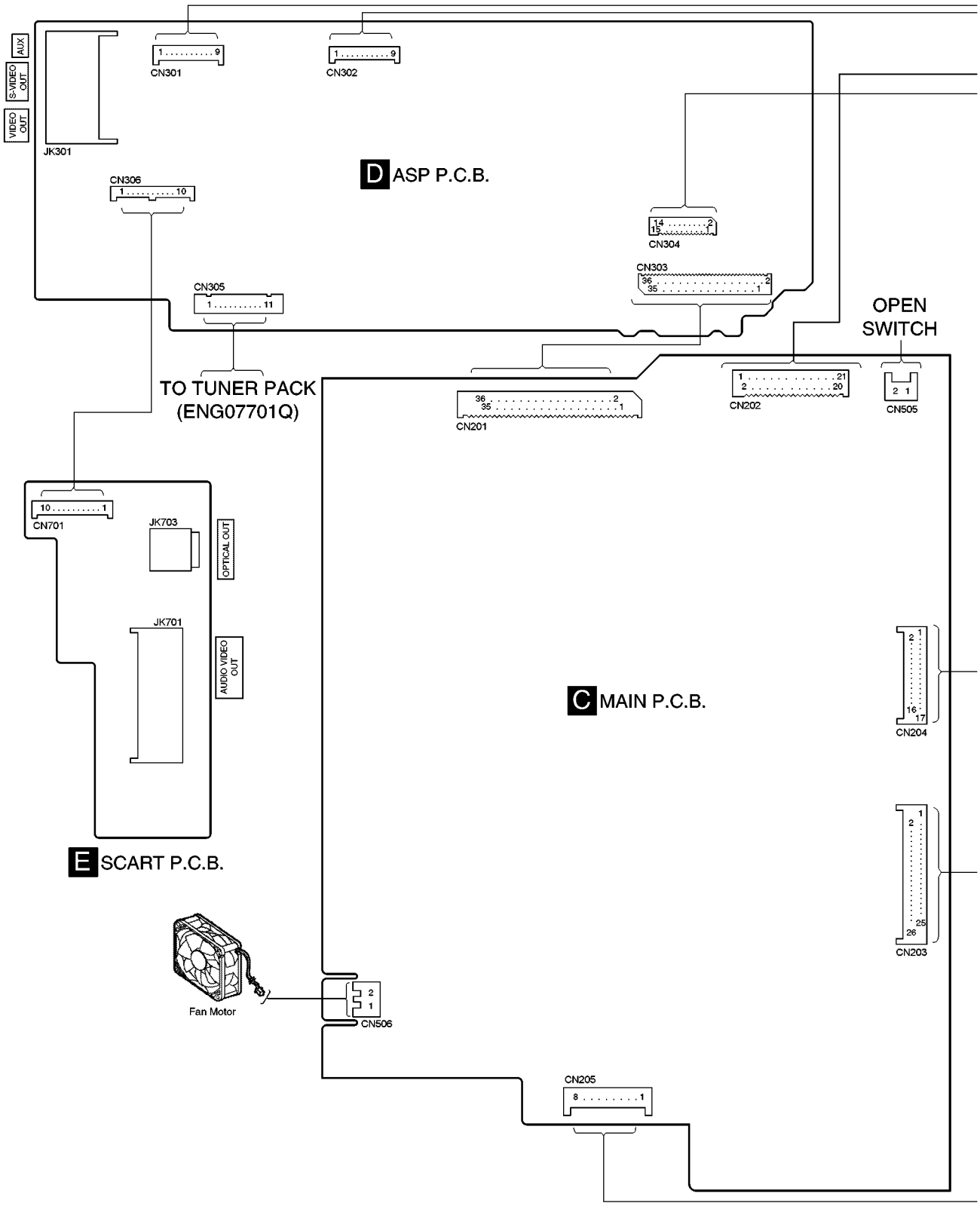

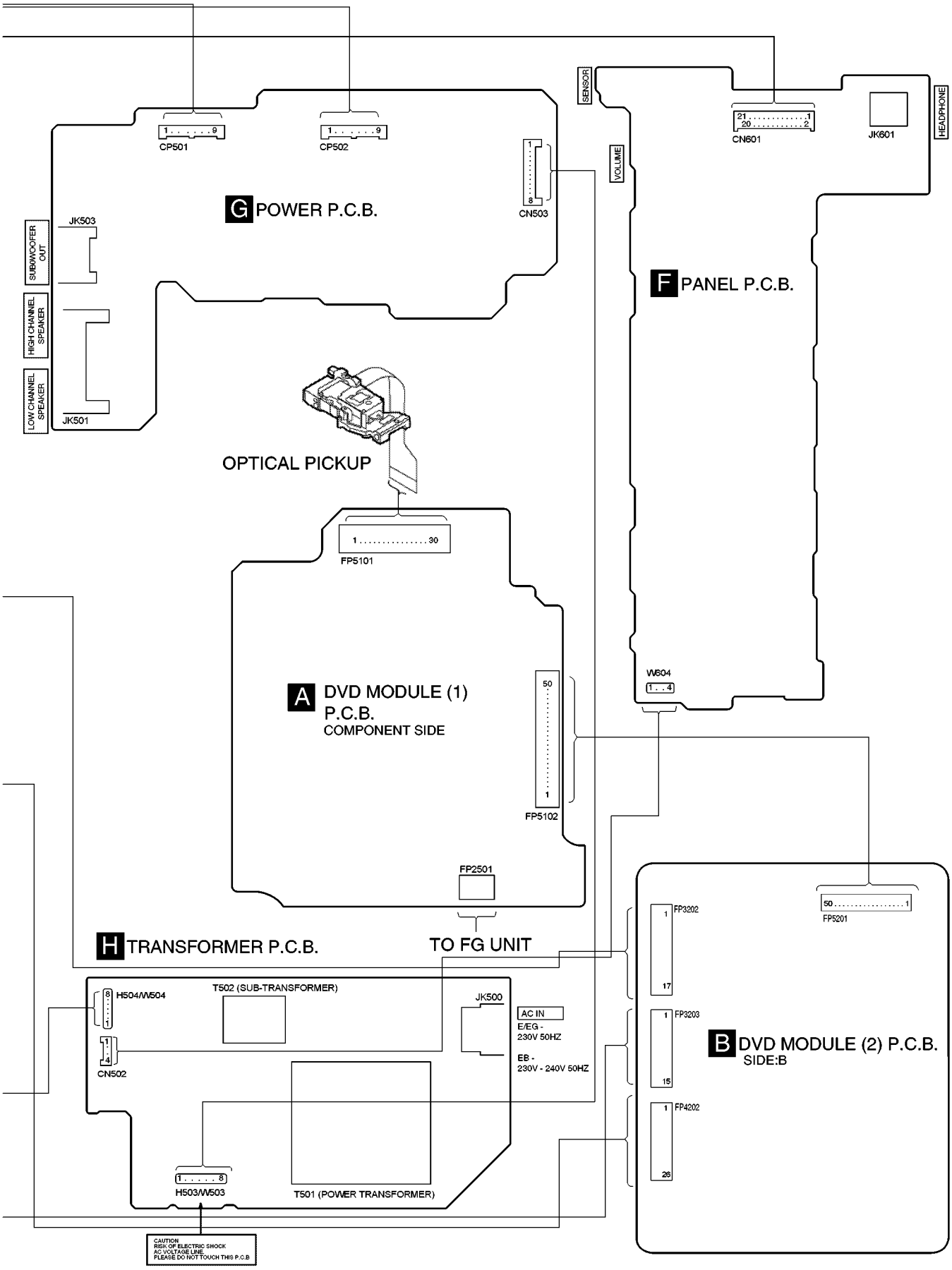
CP501
CP502
G POWER P.C.B.
CN503
SENSOR
VOLUME
CN601
JK601
HEADPHONE
F PANEL P.C.B.
JK503
SUBWOOFER OUT
HIGH CHANNEL SPEAKER
LOW CHANNEL SPEAKER
JK501
OPTICAL PICKUP
FP5101
A DVD MODULE (1) P.C.B.
COMPONENT SIDE
FP5102
W604
FP2501
TO FG UNIT
H TRANSFORMER P.C.B.
H504/W504
T502 (SUB-TRANSFORMER)
JK500
AC IN
E/EG - 230V 50HZ
EB - 230V - 240V 50HZ
CN502
H503/W503
T501 (POWER TRANSFORMER)
CAUTION
RISK OF ELECTRIC SHOCK
AC VOLTAGE LINE
PLEASE DO NOT TOUCH THIS P.C.B
FP5201
FP3202
FP3203
FP4202
B DVD MODULE (2) P.C.B.
SIDE:B

# 23 Parts Location and Replacement Parts List

Notes:

- Important safety notice:

  Components identified by ⚠ mark have special characteristics important for safety.

  Furthermore, special parts which have purposes of fire-retardent (resistors), high-quality sound (capacitors), low noise (resistors), etc are used.

  When replacing any of these components, be sure to use only manufacturer's specified parts shown in the parts list.
- The parenthesized indications in the Remarks columns specify the areas or colour. (Refer to the cover page for area or colour)

  Parts without these indications can be used for all areas.
- Warning: This product uses a laser diode. Refer to caution statements on "Precaution of Laser Diode".

  ACHTUNG:

  – Die Lasereinheit nicht zerlegen.

  – Die Lasereinheit darf nur gegen eine vom Hertsteller spezifizierte Einheit ausgetauscht werden.
- Capacitor values are in microfarads (μF) unless specified otherwise, P= Pico-farads (pF), F= Farads.
- Resistance values are in ohms, unless specified otherwise, 1K=1,000 (OHM).
- The marking (RTL) indicates that the Retention Time is limited for this items. After the discontinuation of this assembly in production, the item will continue to be available for a specific period of time. The retention period of a availability is dependent on the type of assembly, and in accordance with the laws governing part and product retention. After the end of this period, the assembly will no longer be available.
- [M] Indicates in the Remarks columns indicates parts supplied by **PAVCSG.**
- The "(SF)" mark denotes the standard part.
- Reference for O/I book languages are as follows:

| | | | | | | | |
|---|---|---|---|---|---|---|---|
| Ar : | Arabic | Du : | Dutch | It : | Italian | Sp : | Spanish |
| Cf : | Canadian French | En : | English | Ko : | Korean | Sw : | Swedish |
| Cz : | Czech | Fr : | French | Po : | Polish | Co : | Traditional Chinese |
| Da : | Danish | Ge : | German | Ru : | Russian | Cn : | Simplified Chinese |

# 23.1. Loading Mechanism and Traverse Unit

## 23.1.1. Loading Mechanism Parts Location

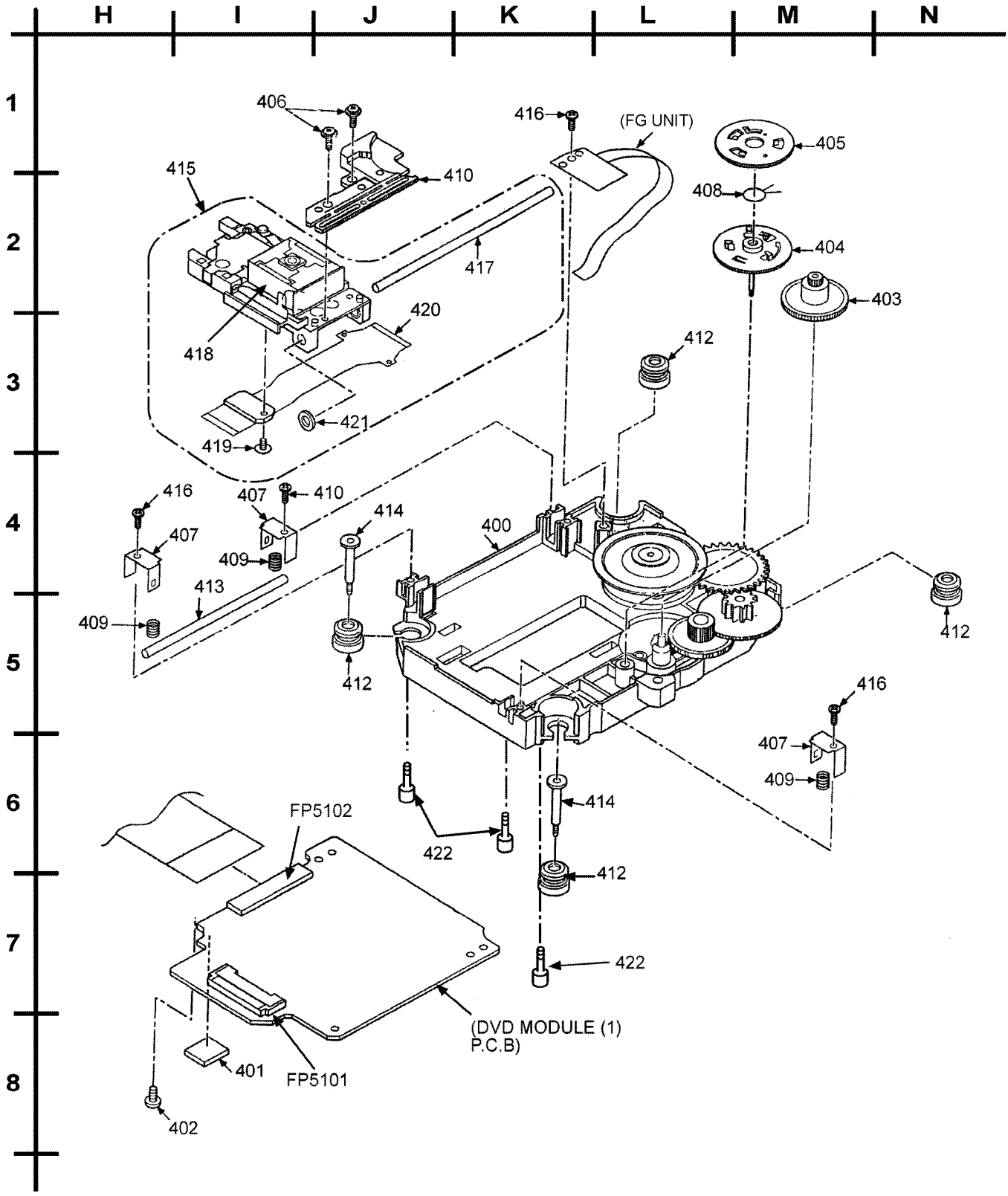

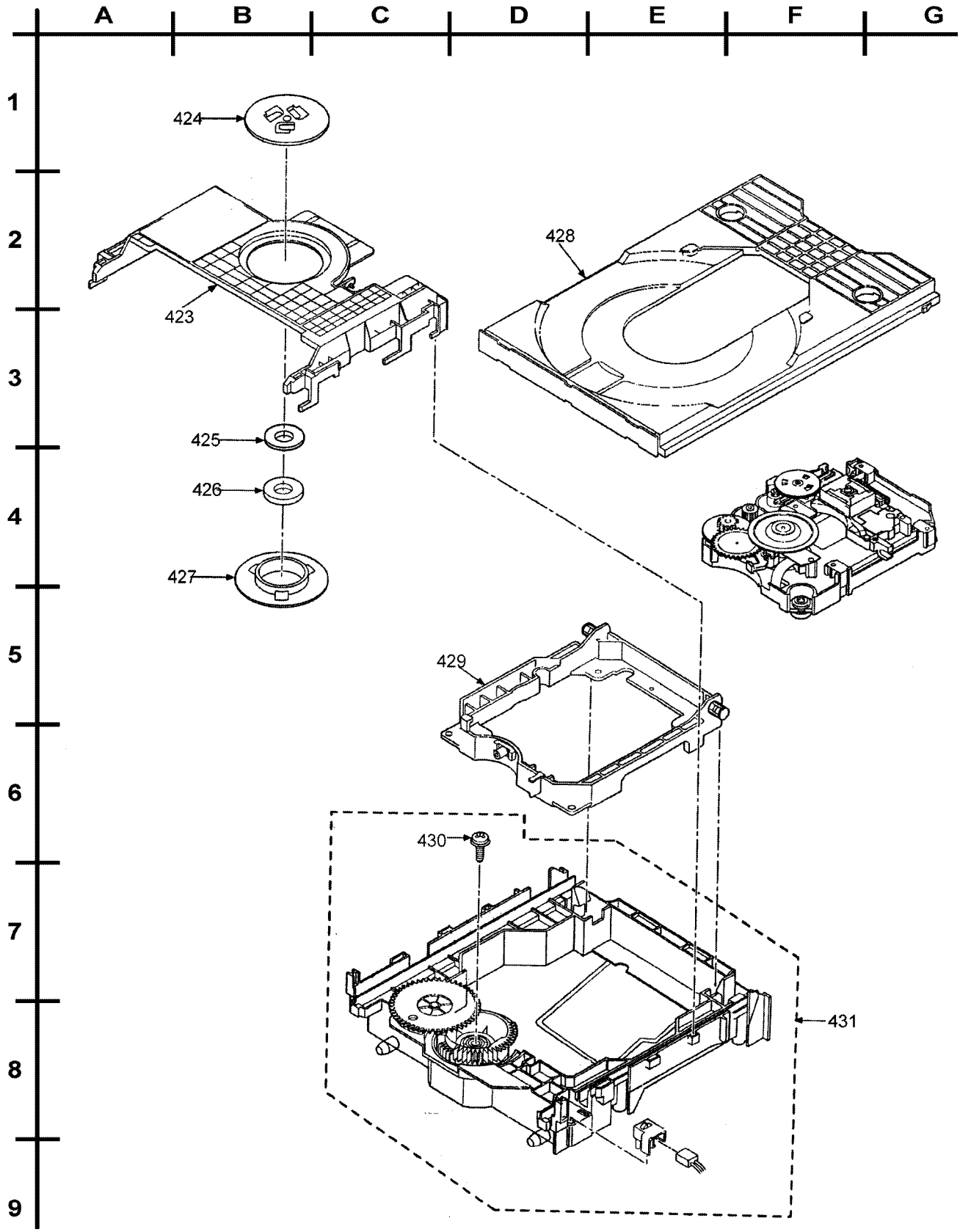
A
B
C
D
E
F
G
1
2
3
4
5
6
7
8
9
424
423
428
425
426
427
429
430
431

## 23.1.2. Traverse Parts List

| Ref. No. | Part No. | Part Name & Description | Remarks |
|---|---|---|---|
| | | TRAVERSE DECK | |
| | | | |
| 400 | RXQ0742B | SPINDLE MOTOR ASS'Y | [SPC] |
| 401 | RMG0558-K | P.C.B. RUBBER | [M] |
| 402 | RHD20060 | PCB SCREW | [M] |
| 403 | RDG0499 | TRAVERSE GEAR A | [M] |
| 404 | RDG0500 | TRAVERSE GEAR B | [M] |
| 405 | RDG0501 | TRAVERSE GEAR C | [M] |
| 406 | RHD17044 | DRIVE RACK SCREW | [M] |
| 407 | RMC0415 | ADJUST SPRING HOLDER | [M] |
| 408 | RME0319 | TRAVERSE GEAR SPRING | [M] |
| 409 | RME0320 | ADJUSTMENT SPRING | [M] |
| 410 | RMM0234-1 | TRAVERSE DRIVE RACK | [M] |
| 412 | RMG0545-A | FLOATING RUBBER | [M] |
| 413 | RMS0711 | GUIDE SHAFT | [M] |
| 414 | RMS0712-1 | FIXED PIN | [M] |
| 415 | RXQ1077 | OPU UNIT | [M] |
| 416 | VHD1224 | SCREW | [M] |
| 417 | RMS0710 | DRIVE SHAFT | [M] |
| 418 | RD-DDP013AS | OPU | [M] |
| 419 | RHD14095 | FPC SCREW | [M] |
| 420 | RJB2308A-1 | INTERFACE FPC | [M] |
| 421 | RMG0561-T | CUSHION RUBBER | [M] |
| 422 | RHD17029 | SHAFT ADJUST SCREW | [M] |
| 423 | RMR1445-K | CLAMP PLATE | [SPC] |
| 424 | RMR1447-X | MAGNET HOLDER | [M] |
| 425 | XWG6FFY | BACK YOKE | [M] |
| 426 | JSM0048 | MAGNET | [M] |
| 427 | RMR1446-X | CLAMPER | [M] |
| 428 | RGQ0280-K3 | TRAY | [M] |
| 429 | RMR1323-K3 | UNIT CHASSIS | [M] |
| 430 | XTW3+12S | SCREW | [M] |
| 431 | RXQ0727-5 | MECHA CHASSIS | [M] |

# 23.2. Cabinet

## 23.2.1. Cabinet Parts Location

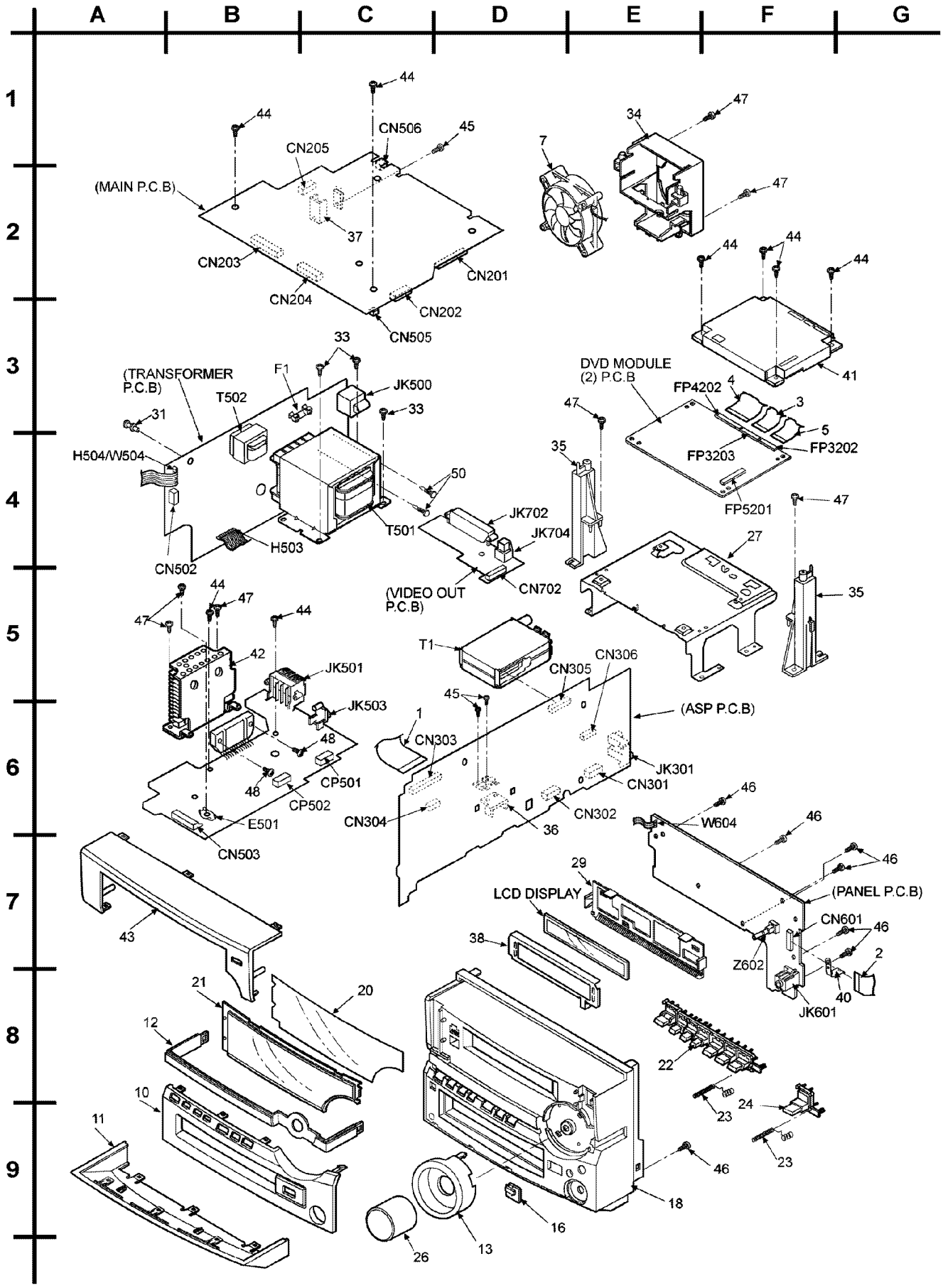

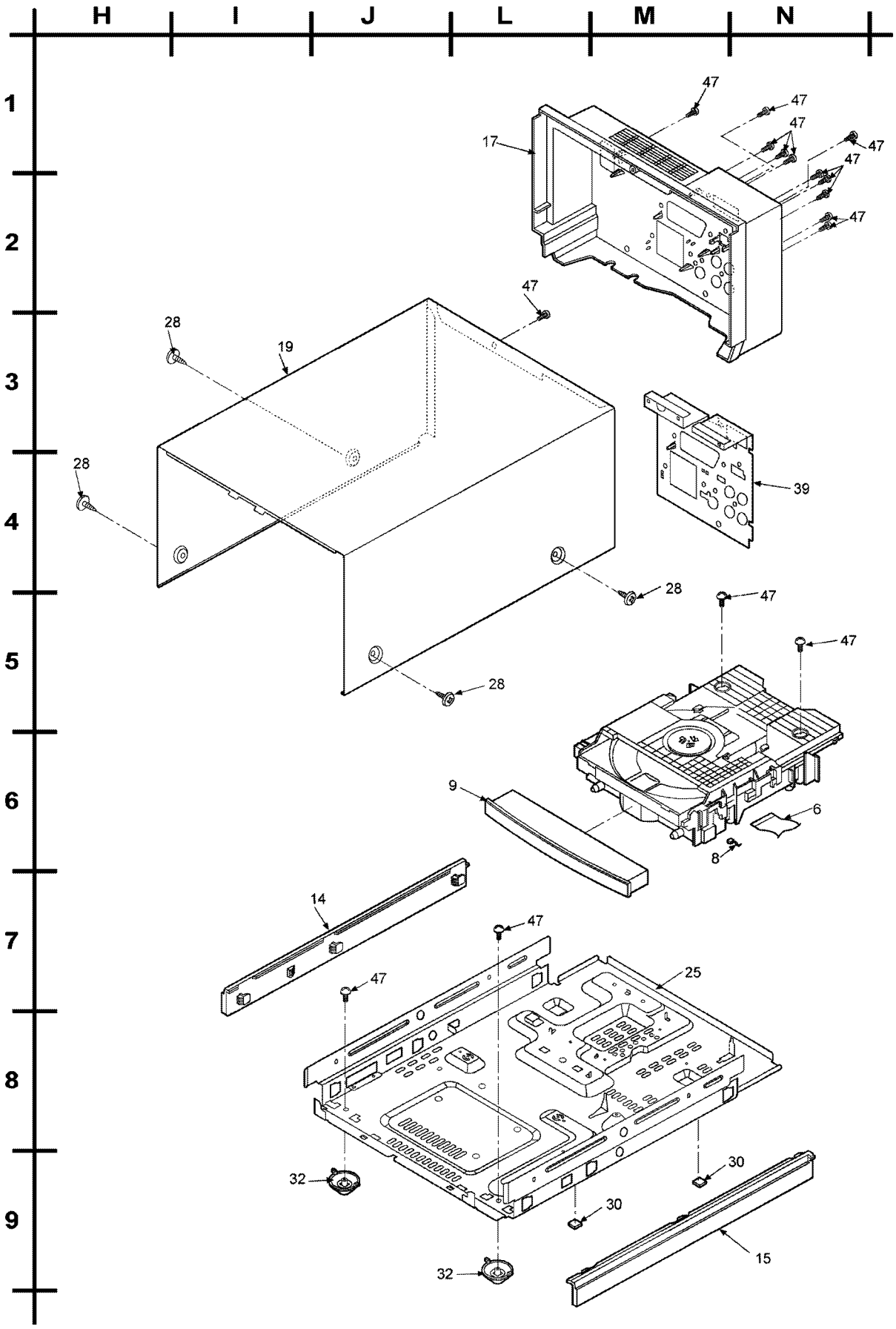
H
I
J
L
M
N
1
2
3
4
5
6
7
8
9
47
17
28
19
39
9
6
8
14
25
32
30
15

## 23.2.2. Cabinet Parts List

| Ref. No. | Part No. | Part Name & Description | Remarks |
|---|---|---|---|
| | | CABINET AND CHASSIS | |
| | | | |
| 1 | REEX0213 | 36P FFC (MAIN-ASP) | [M] |
| 2 | REEX0216 | FLAT WIRE | [M] |
| 3 | REEX0232 | 15P FFC (B/E-ASP) | [M] |
| 4 | REEX0233 | 26P FFC (MAIN-B/E) | [M] |
| 5 | REEX0234 | 17P FFC (MAIN-B/E) | [M] |
| 6 | REEX0251 | 50 P FFC (DU-B/E) | [M] |
| 7 | REM0072-3 | FAN | [M] |
| 8 | REXX0337 | 2P WIRE (MAIN-DL1) | [M] |
| 9 | RGKX0157-S | DVD LID | [M] |
| 10 | RGKX0158-S1 | VENDER ORNAMENT | [M] |
| 11 | RGKX0159-H | BOTTOM ORNAMENT | [M] |
| 12 | RGKX0160A-K | MIDDLE ORNAMENT | [M] |
| 13 | RGKX0161-S | RING ORNAMENT | [M] |
| 14 | RGKX0162-H | BOTTOM ORNAMENT (L) | [M] |
| 15 | RGKX0163-H | BOTTOM ORNAMENT (R) | [M] |
| 16 | RGLX0065-Q | LIGHTING PIECE | [M] |
| 17 | RKFX0104B-H | REAR CABINET | [M]EG E |
| 17 | RKFX0104C-H | REAR CABINET | [M]EB |
| 18 | RGPX0093A-S1 | FRONT PANEL | [M] |
| 19 | RKMX0078-S | TOP CABINET | [M] |
| 20 | RGPX0094 | HALF MIRROR SHEET | [M] |
| 21 | RKWX0193A-G1 | FL WINDOW | [M] |
| 22 | RGUX0490-S | CONTROL BUTTON | [M] |
| 23 | RMBX0023 | EARTH SPRING | [M] |
| 24 | RGUX0491-S | EJECT BUTTON | [M] |
| 25 | RMKX0067 | BOTTOM CHASSIS | [M] |
| 26 | RGWX0073-S | VOLUME KNOB | [M] |
| 27 | RMKX0076 | MECHA BRACKET | [M] |
| 28 | RHD30004-1S | SCREW | [M] |
| 29 | RMN0717 | FL HOLDER | [M] |
| 30 | RKA0059-K | LEG RUBBER | [M] |
| 31 | RMNX0019 | PCB SPACER | [M] |
| 32 | RKA0139-K | LEG BASE | [M] |
| 33 | XTWS3+8T | SCREW | [M] |
| 34 | RMQX0060 | FAN HOLDER | [M] |
| 35 | RMQX0061 | PCB STAND | [M] |
| 36 | RMY0260 | HEAT SINK (SMALL) | [M] |
| 37 | RMY0285 | SMALL HEAT SINK | [M] |
| 38 | RSC0658 | FL SHIELD | [M] |
| 39 | RSCX0075A | REAR SHIELD PLATE | [M] |
| 40 | RSCX0076 | EARTH PLATE | [M] |
| 41 | RSCX0081 | B/E SHIELD PLATE | [M] |
| 42 | RXXX0040 | HEAT SINK UNIT | [M] |
| 43 | RYQX0095-S | TOP ORN UNIT | [M] |
| 44 | XTB3+10J | SCREW | [M] |
| 45 | XTB3+10JFZ | SCREW | [M] |
| 46 | XTBS26+10J | SCREW | [M] |
| 47 | XTBS3+8JFZ1 | SCREW | [M] |
| 48 | XTW3+15T | SCREW | [M] |
| 50 | RMNX0116 | PCB SPACER V2 | [M] |

# 23.3. Component Parts List

| Ref. No. | Part No. | Part Name & Description | Remarks |
|---|---|---|---|
| | | PRINTED CIRCUIT BOARD | |
| | | | |
| | REP3406B-N | DVD MODULE (1) P.C.B. | [M] (RTL) |
| | REPX0384B | DVD MODULE (2) P.C.B. (SIDE: A) | [M] (RTL) |
| | REPX0384B | DVD MODULE (2) P.C.B. (SIDE: B) | [M] (RTL) |
| | REPX0345B | MAIN P.C.B. | [M] (RTL) |
| | REPX0347B | ASP P.C.B. | [M] (RTL) |
| | REPX0347B | SCART P.C.B. | [M] (RTL) |
| | REPX0346A | PANEL P.C.B. | [M] (RTL) |
| | REPX0344B | POWER P.C.B. | [M] (RTL) |
| | REPX0344B | TRANSFORMER P.C.B. | [M] (RTL) |
| | | | |
| | | INTEGRATED CIRCUITS | |
| | | | |
| IC201 | C2DBJH000006 | IC MICRO PROCESSOR | [M] |
| IC301 | BD3871FS-E2 | IC SOUND PROCESSOR | [M] |
| IC302 | C0AABB000085 | IC OP AMP | [M] |
| IC303 | C9ZB00000377 | IC VIDEO BUFFER | [M] |
| IC304 | C1BB00000715 | IC RDS | [M] |
| IC305 | KIA4558FEL | IC DUAL OP-AMP | [M] |
| IC401 | C0DBAJG00002 | IC DC-DC CONVERTER | [M] |
| IC402 | C0DBAJG00002 | IC DC-DC CONVERTER | [M] |
| IC403 | C0DBCFG00004 | IC 1.5V REGULATOR | [M] |
| IC404 | C0DBZHG00005 | IC 5V REG. | [M] |
| IC405 | C0DBZHE00011 | 1C POWER SUPPLY | [M] |
| IC501 | RSN314H41A-P | IC POWER HIC | [M] |
| IC601 | C0HAB0000004 | IC FL DRIVER | [M] |
| IC2501 | C0GBG0000033 | IC MOTOR DRIVE | [M] |
| IC3001 | MN2DS0002AP1 | IC DV 1.3 LSI | [M] |
| IC3051 | C3ABPG000063 | IC 64 SDRAM | [M] |
| IC3061 | C3ABPG000063 | IC 64 SDRAM | [M] |
| IC4201 | C0FBBK000035 | IC A/D CONVERTER | [M] |
| IC6201 | C0EBE0000070 | IC RESET | [M] |
| IC6251 | C0CBCBE00003 | IC REGULATOR | [M] |
| IC6261 | C0JBAA000001 | IC INVERTER | [M] |
| IC6262 | C0JBAA000001 | IC INVERTER | [M] |
| IC6301 | RFKFMD70M160 | IC 16M FLASH ROM | [SPC] |
| IC6311 | C0JBAZ001251 | IC LATCH | [M] |
| IC6312 | C0JBAZ001251 | IC LATCH | [M] |
| IC6561 | C1DB00000980 | IC CLOCK GENERATOR | [M] |
| | | | |
| | | TRANSISTORS | |
| | | | |
| Q201 | KRC104STA | TRANSISTOR | [M] |
| Q202 | KRC102STA | TRANSISTOR | [M] |
| Q203 | KRC102STA | TRANSISTOR | [M] |
| Q204 | 2SB621ARSTA | TRANSISTOR | [M] |
| Q205 | KTC3875GRTA | TRANSISTOR | [M] |
| Q206 | KTC3875GRTA | TRANSISTOR | [M] |
| Q207 | KTC3875GRTA | TRANSISTOR | [M] |
| Q211 | KRC102STA | TRANSISTOR | [M] |
| Q301 | B1AAGC000007 | TRANSISTOR | [M] |
| Q302 | B1AAGC000007 | TRANSISTOR | [M] |
| Q303 | 2SD05920SA | TRANSISTOR | [M] |
| Q304 | B1AAGC000007 | TRANSISTOR | [M] |
| Q305 | B1AAGC000007 | TRANSISTOR | [M] |
| Q306 | KTC3199GRTA | TRANSISTOR | [M] |
| Q307 | KTC3199GRTA | TRANSISTOR | [M] |
| Q308 | KTC3199GRTA | TRANSISTOR | [M] |
| Q309 | KTC3199GRTA | TRANSISTOR | [M] |
| Q310 | B1AAGC000007 | TRANSISTOR | [M] |
| Q311 | KTC3199GRTA | TRANSISTOR | [M] |
| Q312 | KTC3199GRTA | TRANSISTOR | [M] |
| Q321 | KRA110MTA | TRANSISTOR | [M] |
| Q401 | KTA1046 | TRANSISTOR | [M] |
| Q402 | B1ABCF000011 | TRANSISTOR | [M] |
| Q504 | B1AAGC000007 | TRANSISTOR | [M] |
| Q505 | KTC3199GRTA | TRANSISTOR | [M] |
| Q506 | KTC3199GRTA | TRANSISTOR | [M] |
| Q580 | 2SD21370PA | TRANSISTOR | [M] |

| Ref. No. | Part No. | Part Name & Description | Remarks |
|---|---|---|---|
| Q581 | KRC102MTA | TRANSISTOR | [M] |
| Q582 | B1AAGC000007 | TRANSISTOR | [M] |
| Q583 | 2SB621ARSTA | TRANSISTOR | [M] |
| Q601 | KTC3875GRTA | TRANSISTOR | [M] |
| Q602 | KTC3875GRTA | TRANSISTOR | [M] |
| Q701 | 2SD05920SA | TRANSISTOR | [M] |
| Q702 | KTC2026 | TRANSISTOR | [M] |
| Q703 | KTA1046 | TRANSISTOR | [M] |
| Q704 | B1ACCF000039 | TRANSISTOR | [M] |
| Q705 | KTC3875GRTA | TRANSISTOR | [M] |
| Q751 | 2SJ498CDTA | TRANSISTOR | [M] |
| Q752 | B1CABA000002 | TRANSISTOR | [M] |
| Q753 | B1CABA000002 | TRANSISTOR | [M] |
| Q5111 | B1BDBF000004 | TRANSISTOR | [M] |
| Q5115 | B1BDBF000004 | TRANSISTOR | [M] |
| Q5211 | UNR212100L | TRANSISTOR | [M] |
| Q5221 | 2SD1819A0L | TRANSISTOR | [M] |
| Q5225 | 2SD1819A0L | TRANSISTOR | [M] |
| | | | |
| QR2045 | UNR511M00L | TRANSISTOR | [M] |
| | | | |
| | | DIODES | |
| | | | |
| D202 | B0ACCK000005 | DIODE | [M] |
| D203 | 1SS380TE-17 | DIODE | [M] |
| D204 | 1SS380TE-17 | DIODE | [M] |
| D205 | B0ACCK000005 | DIODE | [M] |
| D206 | B0ACCK000005 | DIODE | [M] |
| D207 | B0ACCK000005 | DIODE | [M] |
| D208 | B0ACCK000005 | DIODE | [M] |
| D209 | B0ACCK000005 | DIODE | [M] |
| D210 | B0ACCK000005 | DIODE | [M] |
| D211 | RB751V-40 | DIODE | [M] |
| D213 | RL1N4003N02 | DIODE | [M] |
| D214 | RL1N4003N02 | DIODE | [M] |
| D215 | RL1N4003N02 | DIODE | [M] |
| D216 | B0ACCK000005 | DIODE | [M] |
| D301 | B0BC5R600003 | DIODE | [M] |
| D305 | MA2J72800L | DIODE | [M] |
| D306 | MA2J72800L | DIODE | [M] |
| D310 | B0ACCK000005 | DIODE | [M] |
| D311 | B0ACCK000005 | DIODE | [M] |
| D401 | B0JCPC000004 | DIODE | [M] |
| D402 | B0BC7R500001 | DIODE | [M] |
| D403 | B0JCPC000004 | DIODE | [M] |
| D404 | B0BC7R500001 | DIODE | [M] |
| D405 | UDZSTE1710B | DIODE | [M] |
| D406 | B0ADCC000002 | DIODE | [M] |
| D501 | B0EBNL000004 | DIODE | [M] |
| D504 | B0AACK000004 | DIODE | [M] |
| D505 | B0BA01400041 | DIODE | [M] |
| D506 | B0AACK000004 | DIODE | [M] |
| D580 | RL1N4003N02 | DIODE | [M] |
| D581 | RL1N4003N02 | DIODE | [M] |
| D582 | B0BA6R600008 | DIODE | [M] |
| D583 | RL1N4003N02 | DIODE | [M] |
| D585 | B0AACK000004 | DIODE | [M] |
| D586 | RL1N4003N02 | DIODE | [M] |
| D587 | RL1N4003N02 | DIODE | [M] |
| D588 | RL1N4003N02 | DIODE | [M] |
| D589 | RL1N4003N02 | DIODE | [M] |
| D590 | B0BA03100002 | DIODE | [M] |
| D591 | RL1N4003N02 | DIODE | [M] |
| D592 | RL1N4003N02 | DIODE | [M] |
| D601 | B3AAA0000583 | DIODE | [M] |
| D602 | B0BC5R000009 | DIODE | [M] |
| D603 | B0BC5R600003 | DIODE | [M] |
| D604 | SLR325YCT31 | DIODE | [M] |
| D606 | B0ACCK000005 | DIODE | [M] |
| D701 | B0BC01300001 | DIODE | [M] |
| D702 | B0BC9R000008 | DIODE | [M] |
| D2041 | MA2J72800L | DIODE | [M] |

| Ref. No. | Part No. | Part Name & Description | Remarks |
|---|---|---|---|
| D5151 | MA2J72800L | DIODE | [M] |
| | | | |
| | | CHIP BEADS & INDUCTOR | |
| | | | |
| LB3001 | J0JHC0000045 | CHIP BEADS | [M] |
| LB3002 | J0JHC0000045 | CHIP BEADS | [M] |
| LB3201 | D0GB101JA002 | 100 1/16W | [M] |
| LB3202 | D0GB101JA002 | 100 1/16W | [M] |
| LB3203 | D0GB101JA002 | 100 1/16W | [M] |
| LB3204 | J0JCC0000119 | CHIP INDUCTOR | [M] |
| LB3205 | J0JCC0000119 | CHIP INDUCTOR | [M] |
| LB3206 | J0JCC0000119 | CHIP INDUCTOR | [M] |
| LB3207 | J0JCC0000119 | CHIP INDUCTOR | [M] |
| LB3208 | J0JCC0000119 | CHIP INDUCTOR | [M] |
| LB3209 | D0GB101JA002 | 100 1/16W | [M] |
| LB4200 | J0JBC0000015 | CHIP INDUCTOR | [M] |
| LB4201 | J0JCC0000119 | CHIP INDUCTOR | [M] |
| LB4202 | J0JBC0000015 | CHIP INDUCTOR | [M] |
| LB4203 | J0JBC0000015 | CHIP INDUCTOR | [M] |
| LB4204 | J0JBC0000015 | CHIP INDUCTOR | [M] |
| LB4205 | J0JBC0000015 | CHIP INDUCTOR | [M] |
| LB4206 | J0JBC0000015 | CHIP INDUCTOR | [M] |
| LB4214 | J0JCC0000119 | CHIP INDUCTOR | [M] |
| LB4215 | J0JCC0000119 | CHIP INDUCTOR | [M] |
| LB4216 | J0JBC0000015 | CHIP INDUCTOR | [M] |
| LB4217 | J0JBC0000015 | CHIP INDUCTOR | [M] |
| LB4218 | ERJ3GEY0R00V | 0 1/16W | [M] |
| LB5101 | J0JHC0000045 | CHIP BEADS | [M] |
| LB5105 | J0JBC0000015 | CHIP INDUCTOR | [M] |
| LB5106 | J0JBC0000015 | CHIP INDUCTOR | [M] |
| LB5201 | J0JBC0000015 | CHIP INDUCTOR | [M] |
| LB5204 | J0JCC0000119 | CHIP INDUCTOR | [M] |
| LB5205 | J0JCC0000119 | CHIP INDUCTOR | [M] |
| LB5206 | J0JBC0000015 | CHIP INDUCTOR | [M] |
| LB5207 | J0JCC0000119 | CHIP INDUCTOR | [M] |
| LB5208 | J0JBC0000015 | CHIP INDUCTOR | [M] |
| LB5209 | J0JBC0000015 | CHIP INDUCTOR | [M] |
| LB5210 | J0JCC0000119 | CHIP INDUCTOR | [M] |
| LB5211 | J0JCC0000119 | CHIP INDUCTOR | [M] |
| LB5212 | J0JCC0000119 | CHIP INDUCTOR | [M] |
| LB5213 | J0JCC0000119 | CHIP INDUCTOR | [M] |
| LB5214 | J0JHC0000045 | CHIP BEADS | [M] |
| LB5215 | J0JCC0000119 | CHIP INDUCTOR | [M] |
| LB5217 | J0JCC0000119 | CHIP INDUCTOR | [M] |
| LB5219 | J0JCC0000119 | CHIP INDUCTOR | [M] |
| LB5220 | J0JBC0000015 | CHIP INDUCTOR | [M] |
| LB5222 | ERJ3GEY0R00V | 0 1/16W | [M] |
| LB5228 | J0JBC0000015 | CHIP INDUCTOR | [M] |
| LB5229 | J0JBC0000015 | CHIP INDUCTOR | [M] |
| LB5230 | J0JBC0000015 | CHIP INDUCTOR | [M] |
| LB5231 | J0JHC0000045 | CHIP BEADS | [M] |
| LB5232 | J0JBC0000015 | CHIP INDUCTOR | [M] |
| LB5233 | J0JHC0000045 | CHIP BEADS | [M] |
| LB5234 | J0JBC0000015 | CHIP INDUCTOR | [M] |
| LB5235 | J0JBC0000015 | CHIP INDUCTOR | [M] |
| LB6261 | J0JBC0000015 | CHIP INDUCTOR | [M] |
| LB6301 | J0JHC0000045 | CHIP BEADS | [M] |
| LB6561 | J0JBC0000015 | CHIP INDUCTOR | [M] |
| LB6562 | J0JCC0000167 | CHIP INDUCTOR | [M] |
| LB6564 | J0JCC0000077 | CHIP BEEZ | [M] |
| LB6566 | J0JBC0000015 | CHIP INDUCTOR | [M] |
| LB6567 | J0JCC0000119 | CHIP INDUCTOR | [M] |
| | | | |
| | | SWITCHES | |
| | | | |
| S605 | EVQ21405R | SW POWER | [M] |
| S606 | EVQ21405R | SW SURROUND | [M] |
| S607 | EVQ21405R | SW REVERSE/SKIP | [M] |
| S608 | EVQ21405R | SW FORWARD/SKIP | [M] |
| S609 | EVQ21405R | SW STOP | [M] |
| S610 | EVQ21405R | SW OPEN/CLOSE | [M] |
| S611 | EVQ21405R | SW SELECTOR | [M] |
| S612 | EVQ21405R | SW DVD/PLAY | [M] |
| SW2501 | RSH1A048-A | SW LEAF | [M] |

| Ref. No. | Part No. | Part Name & Description | Remarks |
|---|---|---|---|
| | | | |
| | | CONNECTORS | |
| | | | |
| CN201 | RJS2A7736 | 36P FFC CONNECTOR | [M] |
| CN202 | K1MN21B00031 | 21P FFC CONNECTOR | [M] |
| CN203 | K1MN26B00045 | 26P CONNECTOR | [M] |
| CN204 | K1MN17B00037 | 17P FFC CONNECTOR | [M] |
| CN205 | K1KA08B00066 | 8P CONNECTOR | [M] |
| CN301 | K1KB09B00025 | 9P CONNECTOR | [M] |
| CN302 | K1KB09B00025 | 9P CONNECTOR | [M] |
| CN303 | RJS2A5636 | 36P CONNECTOR | [M] |
| CN304 | RJS2A5615 | 15P FFC CONNECTOR | [M] |
| CN305 | K1KA11A00093 | 11P CONNECTOR | [M] |
| CN306 | K1KA10A00257 | 10P CONNECTOR | [M] |
| CN502 | K1KA04B00057 | 4P CONNECTOR | [M] |
| CN503 | K1KA08B00068 | 10P CONNECTOR | [M] |
| CN505 | K1KA02B00045 | 2P CONNECTOR | [M] |
| CN506 | K1KA02B00047 | 2P CONNECTOR | [M] |
| CN601 | K1MN21B00031 | 21P FFC CONNECTOR | [M] |
| CN702 | K1KB10B00041 | 10P CONNECTOR | [M] |
| | | | |
| CP501 | K1KA09A00098 | 9P CONNECTOR | [M] |
| CP502 | K1KA09A00098 | 9P CONNECTOR | [M] |
| | | | |
| FP2501 | K1MN04B00036 | CONNECTOR | [M] |
| FP3202 | K1MN17B00041 | 17P CONNECTOR | [M] |
| FP3203 | K1MN15B00037 | 15P CONNECTOR | [M] |
| FP4202 | K1MN26B00037 | 26P CONNECTOR | [M] |
| FP5101 | K1MN30B00098 | 30P CONNECTOR | [M] |
| FP5102 | K1MN50B00010 | 50P CONNECTOR | [M] |
| FP5201 | K1MN50B00010 | 50P CONNECTOR | [M] |
| | | | |
| | | COILS | |
| | | | |
| L201 | RLQB3R3KT-1Y | COIL | [M] |
| L202 | J0JBC0000019 | CHIP INDUCTOR | [M] |
| L203 | J0JBC0000019 | CHIP INDUCTOR | [M] |
| L204 | J0JBC0000019 | CHIP INDUCTOR | [M] |
| L205 | G0C4R7JA0027 | PEAKING COILS | [M] |
| L301 | ELJFCR68JF | CHIP INDUCTOR | [M] |
| L302 | ELJFCR39KF | CHIP INDUCTOR | [M] |
| L303 | ELESN220JA | COIL | [M] |
| L305 | G0C101JA0030 | INDUCTOR | [M] |
| L401 | G0A200D00002 | COIL | [M] |
| L402 | G0ZZ00001930 | COIL | [M] |
| L403 | G0A200D00002 | COIL | [M] |
| L404 | G0A200D00002 | COIL | [M] |
| L405 | G0ZZ00001930 | COIL | [M] |
| L406 | G0A200D00002 | COIL | [M] |
| L500 | RLQZ371 | LINE FILTER | [M] ⚠ |
| L501 | G0AR76Y00001 | CHOKE COIL | [M] |
| L502 | G0AR76Y00001 | CHOKE COIL | [M] |
| L503 | G0AR76Y00001 | CHOKE COIL | [M] |
| L504 | G0AR76Y00001 | CHOKE COIL | [M] |
| L601 | J0JBC0000019 | CHIP INDUCTOR | [M] |
| L602 | J0JBC0000019 | CHIP INDUCTOR | [M] |
| L603 | J0JBC0000019 | CHIP INDUCTOR | [M] |
| L604 | ELJPA100KF | CHIP COIL | [M] |
| L701 | ELJFC2R2KF | INDUCTOR | [M] |
| L702 | ELJFC2R2KF | INDUCTOR | [M] |
| L703 | ELJFC2R2KF | INDUCTOR | [M] |
| L709 | G0C101JA0030 | INDUCTOR | [M] |
| L710 | G0C101JA0030 | INDUCTOR | [M] |
| L754 | G0C4R7JA0027 | PEAKING COILS | [M] |
| L755 | VLP0145-T | CHIP INDUCTOR | [M] |
| L756 | VLP0145-T | CHIP INDUCTOR | [M] |
| L757 | VLP0145-T | CHIP INDUCTOR | [M] |
| L758 | VLP0145-T | CHIP INDUCTOR | [M] |
| L2001 | G1C100K00020 | CHIP INDUCTOR | [M] |
| L2002 | G1C100K00020 | CHIP INDUCTOR | [M] |
| L3101 | G1C100K00020 | CHIP INDUCTOR | [M] |
| L4211 | G1C220KA0038 | CHIP CAPACITOR | [M] |
| L5101 | ELJEA100KF | CHIP INDUCTOR | [M] |
| L5221 | G1C100K00020 | CHIP INDUCTOR | [M] |

| Ref. No. | Part No. | Part Name & Description | Remarks |
|---|---|---|---|
| L6561 | G1C220KA0038 | CHIP CAPACITOR | [M] |
| L6562 | G1C220KA0038 | CHIP CAPACITOR | [M] |
| | | | |
| | | TUNER | |
| | | | |
| T1 | ENG07701Q | TUNER PACK | [M] |
| | | | |
| | | TRANSFORMER | |
| | | | |
| T501 | G4C6AFK00001 | TRANSFORMER | [M] ⚠ |
| T502 | G4C2AAJ00003 | BACK UP TRANSFORMER | [M] ⚠ |
| | | | |
| | | COMPONENT COMBINATION | |
| | | | |
| Z501 | ERZV10V511CS | ZENER | [M] ⚠ |
| Z601 | RCDGP1U28XD | REMOTE SENSOR | [M] |
| Z602 | EVEKE2F3024M | VOLUME JOG | [M] |
| | | | |
| | | RELAY | |
| | | | |
| RL501 | RSY0040M-0 | PRIMARY RELAY | [M] ⚠ |
| | | | |
| | | OSCILLATORS | |
| | | | |
| X201 | H2A100500006 | 10 MHZ RESONATOR | [M] |
| X202 | RSXD32K0C01 | CRYSTAL OSCILLATOR | [M] |
| X701 | RSXC4M33S02T | CRYSTAL OSCILLATOR | [M] |
| X6501 | H0J368600003 | CRYSTAL OSCILLATOR | [M] |
| | | | |
| | | DISPLAY TUBE | |
| | | | |
| FL601 | A2BC00000048 | FL | [M] |
| FL4201 | F1H0J1050018 | 1 6.3V | [M] |
| FL6251 | F1J1E1040022 | 0.1 25V | [M] |
| FL6252 | F1H0J1050018 | 1 6.3V | [M] |
| FL6253 | F1H0J1050018 | 1 6.3V | [M] |
| FL6254 | F1H0J1050018 | 1 6.3V | [M] |
| | | | |
| | | FUSES | |
| | | | |
| F1 | K5D631BK0007 | 630MA FUSE | [M] ⚠ |
| | | | |
| | | FUSE HOLDERS | |
| | | | |
| FC1 | EYF52BC | FUSE HOLDER | [M] |
| FC2 | EYF52BC | FUSE HOLDER | [M] |
| | | | |
| | | FUSE PROTECTOR | |
| | | | |
| FP501 | K5G402AA0002 | FUSE PROTECTOR | [M] ⚠ |
| FP502 | K5G102AA0002 | FUSE PROTECTOR | [M] ⚠ |
| | | | |
| | | HOLDERS | |
| | | | |
| H503 | RJS1A5508 | WIRE HOLDER | [M] |
| H504 | RMR0317 | 8P CABLE HOLDER | [M] |
| | | | |
| | | JACKS | |
| | | | |
| JK301 | K1U411B00006 | JK TERMINAL | [M] |
| JK500 | K2AA2B000004 | JK AC INLET | [M] ⚠ |
| JK501 | K4BC08B00011 | JK TERMINAL | [M] |
| JK503 | RJH2110N-1 | JK SUB-WOFFER | [M] |
| JK601 | K2HC103A0023 | JK | [M] |
| JK702 | K1FB121B0012 | JK COMPONENT OUT | [M] |
| JK704 | K7AABB000002 | JK OPTICAL IN | [M] |
| | | | |
| | | EARTH TERMINAL | |
| | | | |
| E501 | SNE1004-2 | EARTH TERMINAL | [M] |
| E601 | K9ZZ00000424 | TERMINAL | [M] |
| E602 | K9ZZ00000424 | TERMINAL | [M] |
| E603 | K9ZZ00000424 | TERMINAL | [M] |
| E604 | K9ZZ00000424 | TERMINAL | [M] |

| Ref. No. | Part No. | Part Name & Description | Remarks |
|---|---|---|---|
| | | | |
| | | WIRES | |
| | | | |
| W503 | REXX0344 | 7P WIRE(TRANS-POWER) | [M] |
| W504 | REXX0327 | 8P WIRE (MAIN-TRANS) | [M] |
| W604 | REXX0345 | 4P WIRE (PANEL-TRAN) | [M] |
| W604 | RMR0313 | 4P CABLE HOLDER | [M] |
| | | | |
| | | RESISTORS | |
| | | | |
| R1 | ERJ3GEY0R00V | 0 1/16W | [M] |
| R201 | D0GB101JA002 | 100 1/16W | [M] |
| R202 | D0GB101JA002 | 100 1/16W | [M] |
| R203 | D0GB101JA002 | 100 1/16W | [M] |
| R204 | D0GB101JA002 | 100 1/16W | [M] |
| R205 | ERJ3GEYJ102V | 1K 1/16W | [M] |
| R206 | ERJ3GEYJ102V | 1K 1/16W | [M] |
| R207 | D0GB101JA002 | 100 1/16W | [M] |
| R208 | D0GB101JA002 | 100 1/16W | [M] |
| R209 | D0GB101JA002 | 100 1/16W | [M] |
| R210 | ERJ3GEYJ473V | 47K 1/16W | [M] |
| R211 | D0GB753JA008 | 75K 1/16W | [M] |
| R212 | D0GB101JA002 | 100 1/16W | [M] |
| R213 | D0GB101JA002 | 100 1/16W | [M] |
| R214 | ERJ3GEYJ473V | 47K 1/16W | [M] |
| R215 | D0GB101JA002 | 100 1/16W | [M] |
| R216 | ERJ3GEYJ102V | 1K 1/16W | [M] |
| R217 | ERJ3GEYJ153V | 15K 1/16W | [M] |
| R218 | ERJ3GEYJ102V | 1K 1/16W | [M] |
| R219 | ERJ3GEYJ153V | 15K 1/16W | [M] |
| R220 | D0GB101JA002 | 100 1/16W | [M] |
| R221 | ERJ3GEYJ153V | 15K 1/16W | [M] |
| R222 | D0GB101JA002 | 100 1/16W | [M] |
| R224 | D0GB101JA002 | 100 1/16W | [M] |
| R225 | ERJ3GEYJ153V | 15K 1/16W | [M] |
| R226 | D0GB101JA002 | 100 1/16W | [M] |
| R227 | ERJ3GEYJ153V | 15K 1/16W | [M] |
| R228 | D0GB101JA002 | 100 1/16W | [M] |
| R229 | ERJ3GEYJ153V | 15K 1/16W | [M] |
| R230 | ERJ3GEYJ102V | 1K 1/16W | [M] |
| R231 | ERJ3GEYJ102V | 1K 1/16W | [M] |
| R232 | ERJ3GEYJ102V | 1K 1/16W | [M] |
| R233 | ERJ3GEYJ102V | 1K 1/16W | [M] |
| R234 | ERJ3GEYJ102V | 1K 1/16W | [M] |
| R235 | ERJ3GEYJ473V | 47K 1/16W | [M] |
| R237 | ERJ3GEYJ102V | 1K 1/16W | [M] |
| R238 | ERJ3GEYJ103V | 10K 1/16W | [M] |
| R239 | ERJ3GEY0R00V | 0 1/16W | [M] |
| R240 | D0GB474JA002 | 470K 1/16W | [M] |
| R241 | ERJ3GEYJ103V | 10K 1/16W | [M] |
| R242 | ERJ3GEYJ103V | 10K 1/16W | [M] |
| R243 | D0GB101JA002 | 100 1/16W | [M] |
| R244 | ERJ3GEYJ182V | 1.8K 1/16W | [M] |
| R245 | ERJ3GEYJ103V | 10K 1/16W | [M] |
| R246 | D0GB682JA002 | 6.8K 1/16W | [M] |
| R247 | ERJ3GEYJ103V | 10K 1/16W | [M] |
| R248 | ERJ3GEYJ103V | 10K 1/16W | [M] |
| R249 | ERJ3GEYJ103V | 10K 1/16W | [M] |
| R250 | ERJ3GEYJ103V | 10K 1/16W | [M] |
| R251 | ERJ3GEYJ103V | 10K 1/16W | [M] |
| R252 | ERJ3GEYJ103V | 10K 1/16W | [M] |
| R253 | ERJ3GEYJ103V | 10K 1/16W | [M] |
| R254 | D0GB101JA002 | 100 1/16W | [M] |
| R255 | D0GB101JA002 | 100 1/16W | [M] |
| R256 | D0GB101JA002 | 100 1/16W | [M] |
| R257 | D0GB101JA002 | 100 1/16W | [M] |
| R258 | ERJ3GEYJ104V | 100K 1/16W | [M] |
| R259 | ERJ3GEYJ104V | 100K 1/16W | [M] |
| R260 | ERJ3GEYJ104V | 100K 1/16W | [M] |
| R261 | ERJ3GEYJ104V | 100K 1/16W | [M] |
| R262 | D0GB101JA002 | 100 1/16W | [M] |
| R263 | D0GB101JA002 | 100 1/16W | [M] |
| R264 | D0GB101JA002 | 100 1/16W | [M] |
| R265 | D0GB101JA002 | 100 1/16W | [M] |

| Ref. No. | Part No. | Part Name & Description | Remarks |
|---|---|---|---|
| R266 | ERJ3GEYJ102V | 1K 1/16W | [M] |
| R267 | ERJ3GEY0R00V | 0 1/16W | [M] |
| R268 | D0GB101JA002 | 100 1/16W | [M] |
| R269 | ERJ3GEYJ103V | 10K 1/16W | [M] |
| R270 | ERJ3GEYJ223V | 22K 1/16W | [M] |
| R271 | ERJ3GEYJ102V | 1K 1/16W | [M] |
| R272 | ERJ3GEYJ102V | 1K 1/16W | [M] |
| R273 | ERJ3GEYJ473V | 47K 1/16W | [M] |
| R274 | ERJ3GEYJ103V | 10K 1/16W | [M] |
| R275 | ERJ3GEYJ103V | 10K 1/16W | [M] |
| R276 | ERJ3GEYJ104V | 100K 1/16W | [M] |
| R277 | ERJ3GEYJ103V | 10K 1/16W | [M] |
| R278 | ERJ3GEYJ223V | 22K 1/16W | [M] |
| R279 | ERJ3GEYJ223V | 22K 1/16W | [M] |
| R280 | D0GB101JA002 | 100 1/16W | [M] |
| R281 | ERJ3GEYJ473V | 47K 1/16W | [M] |
| R282 | ERJ3GEYJ473V | 47K 1/16W | [M] |
| R283 | ERJ3GEYJ102V | 1K 1/16W | [M] |
| R284 | ERJ3GEYJ103V | 10K 1/16W | [M] |
| R285 | ERJ3GEYJ153V | 15K 1/16W | [M] |
| R286 | ERJ3GEYJ103V | 10K 1/16W | [M] |
| R287 | D0GB563JA002 | 56K 1/16W | [M] |
| R288 | ERJ3GEYJ103V | 10K 1/16W | [M] |
| R289 | D0GB101JA002 | 100 1/16W | [M] |
| R290 | D0GB563JA002 | 56K 1/16W | [M] |
| R291 | ERDS1FVJ270T | 27 1/2W | [M] |
| R292 | D0GB563JA002 | 56K 1/16W | [M] |
| R293 | ERJ3GEYJ103V | 10K 1/16W | [M] |
| R294 | ERJ3GEYJ472V | 4.7K 1/16W | [M] |
| R295 | D0GB562JA002 | 5.6K 1/16W | [M] |
| R296 | ERJ3GEYJ824V | 820K 1/16W | [M] |
| R297 | ERJ3GEYJ103V | 10K 1/16W | [M] |
| R298 | ERJ3GEYJ104V | 100K 1/16W | [M] |
| R299 | ERJ3GEYJ103V | 10K 1/16W | [M] |
| R301 | ERJ3GEYJ103V | 10K 1/16W | [M] |
| R302 | ERJ3GEYJ103V | 10K 1/16W | [M] |
| R303 | ERJ3GEYJ102V | 1K 1/16W | [M] |
| R304 | ERJ3GEYJ102V | 1K 1/16W | [M] |
| R305 | ERJ3GEYJ682V | 6.8K 1/16W | [M] |
| R306 | ERJ3GEYJ682V | 6.8K 1/16W | [M] |
| R307 | ERJ3GEYJ102V | 1K 1/16W | [M] |
| R308 | ERJ3GEYJ102V | 1K 1/16W | [M] |
| R312 | ERJ3GEYJ684V | 680K 1/16W | [M] |
| R313 | ERJ3GEYJ682V | 6.8K 1/16W | [M] |
| R314 | ERJ3GEYJ684V | 680K 1/16W | [M] |
| R315 | ERJ3GEYJ682V | 6.8K 1/16W | [M] |
| R317 | D0GB563JA002 | 56K 1/16W | [M] |
| R318 | D0GB273JA002 | 27K 1/16W | [M] |
| R320 | D0GB332JA002 | 3.3K 1/16W | [M] |
| R321 | D0GB332JA002 | 3.3K 1/16W | [M] |
| R322 | D0GB100JA002 | 10 1/16W | [M] |
| R323 | D0GB100JA002 | 10 1/16W | [M] |
| R324 | D0GB100JA002 | 10 1/16W | [M] |
| R325 | D0GB100JA002 | 10 1/16W | [M] |
| R328 | ERJ3GEYJ123V | 12K 1/16W | [M] |
| R329 | ERJ3GEYJ123V | 12K 1/16W | [M] |
| R330 | ERJ3GEYJ682V | 6.8K 1/16W | [M] |
| R331 | ERJ3GEYJ472V | 4.7K 1/16W | [M] |
| R332 | ERJ3GEYJ103V | 10K 1/16W | [M] |
| R333 | ERJ3GEYJ682V | 6.8K 1/16W | [M] |
| R334 | ERJ3GEYJ472V | 4.7K 1/16W | [M] |
| R335 | ERJ3GEYJ103V | 10K 1/16W | [M] |
| R336 | ERJ3GEYJ102V | 1K 1/16W | [M] |
| R337 | ERJ3GEYJ102V | 1K 1/16W | [M] |
| R338 | ERJ3GEYJ102V | 1K 1/16W | [M] |
| R339 | ERJ3GEYJ102V | 1K 1/16W | [M] |
| R340 | ERJ3GEYJ104V | 100K 1/16W | [M] |
| R341 | ERJ3GEYJ104V | 100K 1/16W | [M] |
| R342 | ERJ3GEYJ221V | 220 1/16W | [M] |
| R343 | ERJ3GEYJ221V | 220 1/16W | [M] |
| R344 | ERJ3GEYJ472V | 4.7K 1/16W | [M] |
| R345 | ERJ3GEYJ153V | 15K 1/16W | [M] |
| R346 | D0GB272JA002 | 2.7K 1/16W | [M] |
| R347 | ERJ3GEYJ472V | 4.7K 1/16W | [M] |

| Ref. No. | Part No. | Part Name & Description | Remarks |
|---|---|---|---|
| R348 | ERJ3GEYJ153V | 15K 1/16W | [M] |
| R349 | D0GB272JA002 | 2.7K 1/16W | [M] |
| R350 | ERJ3GEYJ682V | 6.8K 1/16W | [M] |
| R351 | ERJ3GEYJ682V | 6.8K 1/16W | [M] |
| R352 | D0GB333JA002 | 33K 1/16W | [M] |
| R353 | D0GB272JA002 | 2.7K 1/16W | [M] |
| R354 | ERJ3GEYJ682V | 6.8K 1/16W | [M] |
| R355 | ERJ3GEYJ682V | 6.8K 1/16W | [M] |
| R356 | D0GB333JA002 | 33K 1/16W | [M] |
| R357 | D0GB272JA002 | 2.7K 1/16W | [M] |
| R361 | ERJ3GEY0R00V | 0 1/16W | [M] |
| R365 | D0GB750JA019 | 75 1/16W | [M] |
| R366 | D0GB750JA019 | 75 1/16W | [M] |
| R367 | D0GB750JA019 | 75 1/16W | [M] |
| R368 | D0GB750JA019 | 75 1/16W | [M] |
| R369 | D0GB750JA019 | 75 1/16W | [M] |
| R370 | D0GB750JA019 | 75 1/16W | [M] |
| R371 | ERJ3GEY0R00V | 0 1/16W | [M] |
| R374 | D0GB392JA002 | 3.9K 1/16W | [M] |
| R375 | ERJ3GEYJ222V | 2.2K 1/16W | [M] |
| R376 | ERJ3GEYJ222V | 2.2K 1/16W | [M] |
| R377 | D0GB750JA019 | 75 1/16W | [M] |
| R378 | ERJ3GEYJ102V | 1K 1/16W | [M] |
| R379 | ERJ3GEYJ103V | 10K 1/16W | [M] |
| R380 | ERJ3GEYJ102V | 1K 1/16W | [M] |
| R381 | ERJ3GEYJ104V | 100K 1/16W | [M] |
| R382 | ERJ3GEYJ472V | 4.7K 1/16W | [M] |
| R383 | ERJ3GEYJ222V | 2.2K 1/16W | [M] |
| R384 | ERJ3GEYJ103V | 10K 1/16W | [M] |
| R385 | ERJ3GEYJ102V | 1K 1/16W | [M] |
| R386 | ERJ3GEYJ104V | 100K 1/16W | [M] |
| R387 | ERJ3GEYJ472V | 4.7K 1/16W | [M] |
| R388 | ERJ3GEYJ222V | 2.2K 1/16W | [M] |
| R401 | ERJ3GEYJ822V | 8.2K 1/16W | [M] |
| R402 | ERJ3GEYJ222V | 2.2K 1/16W | [M] |
| R403 | D0GB101JA002 | 100 1/16W | [M] |
| R404 | ERJ3GEYJ222V | 2.2K 1/16W | [M] |
| R405 | ERJ3GEYJ222V | 2.2K 1/16W | [M] |
| R406 | ERJ3GEYJ104V | 100K 1/16W | [M] |
| R407 | D0GB333JA002 | 33K 1/16W | [M] |
| R408 | ERJ3GEYJ102V | 1K 1/16W | [M] |
| R409 | D0GB331JA002 | 330 1/16W | [M] |
| R410 | ERJ3GEYJ223V | 22K 1/16W | [M] |
| R411 | ERJ3GEYJ102V | 1K 1/16W | [M] |
| R412 | ERJ3GEYJ104V | 100K 1/16W | [M] |
| R416 | ERJ3GEYJ103V | 10K 1/16W | [M] |
| R417 | ERJ3GEYJ102V | 1K 1/16W | [M] |
| R418 | ERJ3GEY0R00V | 0 1/16W | [M] |
| R419 | D0GB101JA002 | 100 1/16W | [M] |
| R420 | D0GB101JA002 | 100 1/16W | [M] |
| R421 | ERJ3GEYJ102V | 1K 1/16W | [M] |
| R422 | D0GB392JA002 | 3.9K 1/16W | [M] |
| R423 | ERJ3GEYJ681V | 680 1/16W | [M] |
| R501 | ERDS2TJ153T | 15K 1/4W | [M] |
| R502 | ERDS2TJ153T | 15K 1/4W | [M] |
| R503 | ERDS2TJ153T | 15K 1/4W | [M] |
| R504 | ERDS2TJ153T | 15K 1/4W | [M] |
| R505 | ERDS2TJ332T | 3.3K 1/4W | [M] |
| R506 | ERDS2TJ332T | 3.3K 1/4W | [M] |
| R507 | ERDS2TJ392T | 3.9K 1/4W | [M] |
| R508 | ERDS2TJ392T | 3.9K 1/4W | [M] |
| R509 | ERDS2TJ823T | 82K 1/4W | [M] |
| R510 | ERDS2TJ823T | 82K 1/4W | [M] |
| R511 | ERDS2TJ823T | 82K 1/4W | [M] |
| R512 | ERDS2TJ823T | 82K 1/4W | [M] |
| R513 | ERDS1FVJ331T | 330 1/2W | [M] |
| R514 | ERDS1FVJ331T | 330 1/2W | [M] |
| R515 | ERDS1FVJ331T | 330 1/2W | [M] |
| R516 | ERDS2TJ104T | 100K 1/4W | [M] |
| R517 | ERDS2TJ394T | 390K 1/4W | [M] |
| R518 | ERDS2TJ184T | 180K 1/4W | [M] |
| R519 | ERDS2TJ683T | 68K 1/4W | [M] |
| R520 | ERDS2TJ104T | 100K 1/4W | [M] |
| R521 | ERDS2TJ223T | 22K 1/4W | [M] |

| Ref. No. | Part No. | Part Name & Description | Remarks |
|---|---|---|---|
| R522 | ERDS2TJ223T | 22K 1/4W | [M] |
| R523 | ERDS2TJ103T | 10K 1/4W | [M] |
| R524 | ERDS2TJ103T | 10K 1/4W | [M] |
| R527 | ERDS2TJ332T | 3.3K 1/4W | [M] |
| R528 | ERDS2TJ223T | 22K 1/4W | [M] |
| R529 | ERDS2TJ103T | 10K 1/4W | [M] |
| R530 | ERDS2TJ123T | 12K 1/4W | [M] |
| R531 | ERDS1FVJ100T | 10 1/2W | [M] |
| R532 | ERDS1FVJ100T | 10 1/2W | [M] |
| R533 | ERDS1FVJ100T | 10 1/2W | [M] |
| R534 | ERDS1FVJ100T | 10 1/2W | [M] |
| R535 | ERDS2TJ391T | 390 1/4W | [M] |
| R536 | ERDS2TJ391T | 390 1/4W | [M] |
| R537 | ERDS2TJ152T | 1.5K 1/4W | [M] |
| R538 | ERDS2TJ152T | 1.5K 1/4W | [M] |
| R544 | ERDS1FVJ100T | 10 1/2W | [M] |
| R545 | ERDS1FVJ100T | 10 1/2W | [M] |
| R546 | ERDS1FVJ100T | 10 1/2W | [M] |
| R547 | ERDS1FVJ100T | 10 1/2W | [M] |
| R580 | ERDS1FVJ180T | 18 1/2W | [M] |
| R581 | ERDS1FVJ100T | 10 1/2W | [M] |
| R582 | ERDS2TJ332T | 3.3K 1/4W | [M] |
| R583 | ERDS2TJ821T | 820 1/4W | [M] |
| R584 | ERDS2TJ151T | 150 1/4W | [M] |
| R585 | ERDS2TJ103T | 10K 1/4W | [M] |
| R586 | ERDS2TJ103T | 10K 1/4W | [M] |
| R587 | ERDS2TJ472T | 4.7K 1/4W | [M] |
| R588 | ERDS2TJ151T | 150 1/4W | [M] |
| R589 | ERD2FCVJ4R7T | 4.7 1/4W | [M] |
| R590 | ERDS1FVJ100T | 10 1/2W | [M] |
| R601 | ERJ3GEYJ470V | 47 1/16W | [M] |
| R602 | ERJ3GEYJ102V | 1K 1/16W | [M] |
| R603 | ERJ3GEYJ102V | 1K 1/16W | [M] |
| R604 | D0GB101JA002 | 100 1/16W | [M] |
| R605 | D0GB101JA002 | 100 1/16W | [M] |
| R606 | D0GB333JA002 | 33K 1/16W | [M] |
| R607 | ERJ3GEYJ104V | 100K 1/16W | [M] |
| R608 | D0GB332JA002 | 3.3K 1/16W | [M] |
| R609 | ERJ3GEYJ102V | 1K 1/16W | [M] |
| R610 | ERJ3GEYJ102V | 1K 1/16W | [M] |
| R611 | ERJ3GEYJ102V | 1K 1/16W | [M] |
| R612 | ERJ3GEYJ102V | 1K 1/16W | [M] |
| R617 | ERJ3GEYJ102V | 1K 1/16W | [M] |
| R618 | ERJ3GEYJ102V | 1K 1/16W | [M] |
| R619 | D0GB122JA019 | 1.2K 1/16W | [M] |
| R620 | ERJ3GEYJ182V | 1.8K 1/16W | [M] |
| R621 | ERJ3GEYJ102V | 1K 1/16W | [M] |
| R622 | ERJ3GEYJ102V | 1K 1/16W | [M] |
| R624 | D0GB101JA002 | 100 1/16W | [M] |
| R625 | ERJ3GEYJ102V | 1K 1/16W | [M] |
| R704 | ERJ3GEYJ102V | 1K 1/16W | [M] |
| R706 | ERJ3GEY0R00V | 0 1/16W | [M] |
| R707 | D0GB152JA002 | 1.5K 1/16W | [M] |
| R708 | D0GB122JA019 | 1.2K 1/16W | [M] |
| R712 | ERJ3GEYJ104V | 100K 1/16W | [M] |
| R713 | ERJ3GEYJ102V | 1K 1/16W | [M] |
| R714 | ERJ3GEYJ102V | 1K 1/16W | [M] |
| R715 | ERJ3GEYJ102V | 1K 1/16W | [M] |
| R718 | ERJ3GEYJ153V | 15K 1/16W | [M] |
| R719 | ERJ3GEYJ102V | 1K 1/16W | [M] |
| R720 | ERJ3GEYJ153V | 15K 1/16W | [M] |
| R721 | ERJ3GEYJ102V | 1K 1/16W | [M] |
| R722 | D0GB392JA002 | 3.9K 1/16W | [M] |
| R723 | ERD25FVJ270T | 27 1/4W | [M] |
| R724 | ERD25FVJ270T | 27 1/4W | [M] |
| R725 | ERJ3GEYJ473V | 47K 1/16W | [M] |
| R726 | ERJ3GEYJ473V | 47K 1/16W | [M] |
| R727 | ERJ3GEYJ391V | 390 1/16W | [M] |
| R728 | D0GB272JA002 | 2.7K 1/16W | [M] |
| R729 | ERDS1FVJ100T | 10 1/2W | [M] |
| R730 | ERDS1FVJ2R2T | 2.2 1/2W | [M] |
| R731 | D0GB151JA002 | 150 1/16W | [M] |
| R732 | D0GB332JA002 | 3.3K 1/16W | [M] |
| R733 | D0GB272JA002 | 2.7K 1/16W | [M] |

| Ref. No. | Part No. | Part Name & Description | Remarks |
|---|---|---|---|
| R734 | D0GB332JA002 | 3.3K 1/16W | [M] |
| R735 | ERDS1FVJ150T | 15 1/2W | [M] |
| R736 | ERD2FCVG270T | 27 1/4W | [M] |
| R737 | ERJ3GEYJ102V | 1K 1/16W | [M] |
| R738 | ERJ3GEYJ102V | 1K 1/16W | [M] |
| R739 | ERJ3GEYJ123V | 12K 1/16W | [M] |
| R740 | ERJ3GEYJ123V | 12K 1/16W | [M] |
| R741 | ERJ3GEYJ102V | 1K 1/16W | [M] |
| R742 | ERJ3GEYJ123V | 12K 1/16W | [M] |
| R743 | D0GB821JA002 | 820 1/16W | [M] |
| R744 | ERJ3GEYJ102V | 1K 1/16W | [M] |
| R745 | D0GB152JA002 | 1.5K 1/16W | [M] |
| R746 | ERJ3GEYJ123V | 12K 1/16W | [M] |
| R747 | D0GB562JA002 | 5.6K 1/16W | [M] |
| R748 | D0GB332JA002 | 3.3K 1/16W | [M] |
| R749 | ERJ3GEYJ123V | 12K 1/16W | [M] |
| R750 | D0GB101JA002 | 100 1/16W | [M] |
| R754 | D0GB750JA019 | 75 1/16W | [M] |
| R755 | ERJ3GEYJ222V | 2.2K 1/16W | [M] |
| R756 | ERJ3GEY0R00V | 0 1/16W | [M] |
| R757 | ERJ3GEYJ102V | 1K 1/16W | [M] |
| R758 | D0GB100JA002 | 10 1/16W | [M] |
| R760 | D0GB272JA002 | 2.7K 1/16W | [M] |
| R761 | D0GB272JA002 | 2.7K 1/16W | [M] |
| R2011 | J0JBC0000015 | INDUCTOR | [M] |
| R2012 | D0GB752JA008 | 7.5K 1/16W | [M] |
| R2013 | J0JBC0000015 | INDUCTOR | [M] |
| R2014 | D0GB752JA008 | 7.5K 1/16W | [M] |
| R2015 | J0JBC0000015 | INDUCTOR | [M] |
| R2016 | ERJ3GEYJ822V | 8.2K 1/16W | [M] |
| R2017 | J0JBC0000015 | INDUCTOR | [M] |
| R2018 | ERJ3GEYJ822V | 8.2K 1/16W | [M] |
| R2021 | ERJ3GEYJ153V | 15K 1/16W | [M] |
| R2023 | ERJ3GEYJ153V | 15K 1/16W | [M] |
| R2031 | D0GB683JA002 | 68K 1/16W | [M] |
| R2032 | ERJ3GEYJ102V | 1K 1/16W | [M] |
| R2033 | ERJ3RBD153V | 15K 3W | [M] |
| R2041 | ERJ3GEYJ473V | 47K 1/16W | [M] |
| R2045 | ERJ3GEYJ823V | 82K 1/16W | [M] |
| R2046 | ERJ3GEYJ221V | 220 1/16W | [M] |
| R2051 | ERJ3RBD392V | 3.9K 3W | [M] |
| R2501 | D0GB101JA002 | 100 1/16W | [M] |
| R2502 | ERJ3GEYJ153V | 15K 1/16W | [M] |
| R2503 | ERJ3GEYJ153V | 15K 1/16W | [M] |
| R2504 | ERJ3GEYJ823V | 82K 1/16W | [M] |
| R2505 | ERJ3GEYJ823V | 82K 1/16W | [M] |
| R2507 | D0GF6R8JA017 | 6.8 1/16W | [M] |
| R3001 | J0JCC0000119 | INDUCTOR | [M] |
| R3002 | ERJ3GEYJ103V | 10K 1/16W | [M] |
| R3003 | ERJ3GEYJ103V | 10K 1/16W | [M] |
| R3012 | ERJ3GEYJ473V | 47K 1/16W | [M] |
| R3013 | ERJ3GEYJ330V | 33 1/16W | [M] |
| R3041 | D0GB101JA002 | 100 1/16W | [M] |
| R3043 | D0GB101JA002 | 100 1/16W | [M] |
| R3101 | ERJ3RBD153V | 15K 3W | [M] |
| R3102 | ERJ3RBD751V | 750 3W | [M] |
| R3103 | ERJ3RBD223V | 22K 3W | [M] |
| R3104 | ERJ3RBD222V | 2.2K 3W | [M] |
| R3105 | ERJ3RBD152V | 1.5K 3W | [M] |
| R3111 | ERJ3RED620V | 62 3W | [M] |
| R3112 | ERJ3RED150V | 15 3W | [M] |
| R3116 | ERJ3RED620V | 62 3W | [M] |
| R3117 | ERJ3RED150V | 15 3W | [M] |
| R3121 | ERJ3RBD560V | 56 3W | [M] |
| R3122 | ERJ3GEY0R00V | 0 1/16W | [M] |
| R3126 | ERJ3RED560V | 56 3W | [M] |
| R3131 | ERJ3RED560V | 56 3W | [M] |
| R4201 | ERJ3GEYJ470V | 47 1/16W | [M] |
| R5101 | D0GB560JA002 | 56 1/16W | [M] |
| R5102 | D0GB560JA002 | 56 1/16W | [M] |
| R5103 | D0GB560JA002 | 56 1/16W | [M] |
| R5107 | ERJ3GEY0R00V | 0 1/16W | [M] |
| R5108 | ERJ3GEY0R00V | 0 1/16W | [M] |
| R5109 | ERJ3GEY0R00V | 0 1/16W | [M] |

| Ref. No. | Part No. | Part Name & Description | Remarks |
|---|---|---|---|
| R5111 | ERJ3GEYJ2R2V | 2.2 1/16W | [M] |
| R5112 | ERJ12YJ270H | 27 1/2W | [M] |
| R5113 | ERJ3GEYJ473V | 47K 1/16W | [M] |
| R5114 | ERJ3GEYJ223V | 22K 1/16W | [M] |
| R5115 | ERJ3GEYJ2R2V | 2.2 1/16W | [M] |
| R5116 | ERJ12YJ270H | 27 1/2W | [M] |
| R5117 | ERJ3GEYJ473V | 47K 1/16W | [M] |
| R5120 | ERJ3GEY0R00V | 0 1/16W | [M] |
| R5121 | D0GB560JA002 | 56 1/16W | [M] |
| R5122 | D0GB560JA002 | 56 1/16W | [M] |
| R5123 | D0GB560JA002 | 56 1/16W | [M] |
| R5124 | ERJ3GEYJ472V | 4.7K 1/16W | [M] |
| R5152 | ERJ3GEYJ102V | 1K 1/16W | [M] |
| R5201 | ERJ3GEY0R00V | 0 1/16W | [M] |
| R5202 | ERJ3GEY0R00V | 0 1/16W | [M] |
| R5221 | ERJ3GEY0R00V | 0 1/16W | [M] |
| R5222 | ERJ3GEYJ102V | 1K 1/16W | [M] |
| R5223 | D0GB331JA002 | 330 1/16W | [M] |
| R5225 | ERJ3GEY0R00V | 0 1/16W | [M] |
| R5226 | ERJ3GEYJ102V | 1K 1/16W | [M] |
| R5227 | D0GB331JA002 | 330 1/16W | [M] |
| R5231 | J0JCC0000119 | INDUCTOR | [M] |
| R5232 | J0JCC0000119 | INDUCTOR | [M] |
| R5233 | ERJ3GEYJ222V | 2.2K 1/16W | [M] |
| R5234 | ERJ3GEYJ222V | 2.2K 1/16W | [M] |
| R6201 | ERJ3GEYJ472V | 4.7K 1/16W | [M] |
| R6261 | ERJ3GEYJ103V | 10K 1/16W | [M] |
| R6311 | ERJ3GEYJ103V | 10K 1/16W | [M] |
| R6312 | ERJ3GEYJ103V | 10K 1/16W | [M] |
| R6351 | D0GB101JA002 | 100 1/16W | [M] |
| R6562 | ERJ3GEYJ221V | 220 1/16W | [M] |
| R6563 | ERJ3GEYJ103V | 10K 1/16W | [M] |
| R6564 | D0GB100JA002 | 10 1/16W | [M] |
| R6565 | ERJ3GEYJ470V | 47 1/16W | [M] |
| | | | |
| K3011 | ERJ6GEY0R00V | 0 1/10W | [M] |
| K3012 | ERJ3GEY0R00V | 0 1/16W | [M] |
| K3013 | ERJ3GEY0R00V | 0 1/16W | [M] |
| K3014 | ERJ3GEY0R00V | 0 1/16W | [M] |
| K3015 | ERJ3GEY0R00V | 0 1/16W | [M] |
| K3016 | ERJ3GEY0R00V | 0 1/16W | [M] |
| K3017 | ERJ3GEY0R00V | 0 1/16W | [M] |
| K3111 | ERJ3GEY0R00V | 0 1/16W | [M] |
| K3116 | ERJ3GEY0R00V | 0 1/16W | [M] |
| K3121 | ERJ3GEY0R00V | 0 1/16W | [M] |
| K3126 | ERJ3GEY0R00V | 0 1/16W | [M] |
| K3131 | ERJ3GEY0R00V | 0 1/16W | [M] |
| K6301 | ERJ3GEY0R00V | 0 1/16W | [M] |
| K6302 | ERJ3GEY0R00V | 0 1/16W | [M] |
| | | | |
| RA2025 | EXBV4V473JV | 47K 1/16W | [M] |
| RA2501 | EXBV8V473JV | 47K 1/16W | [M] |
| RA3001 | EXBV8V820JV | 82 1/16W | [M] |
| RA3002 | EXBV8V820JV | 82 1/16W | [M] |
| RA3003 | EXBV8V820JV | 82 1/16W | [M] |
| RA3004 | EXBV8V820JV | 82 1/16W | [M] |
| RA3005 | EXBV4V220JV | 22 1/16W | [M] |
| RA3006 | EXBV8V820JV | 82 1/16W | [M] |
| RA3007 | EXBV8V820JV | 82 1/16W | [M] |
| RA3008 | EXBV8V820JV | 82 1/16W | [M] |
| RA3009 | EXBV8V820JV | 82 1/16W | [M] |
| RA3010 | EXBV8V820JV | 82 1/16W | [M] |
| RA3011 | EXBV8V820JV | 82 1/16W | [M] |
| RA3012 | EXBV8V820JV | 82 1/16W | [M] |
| RA3025 | EXBV4V102JV | 1K 1/16W | [M] |
| RA3042 | EXBV4V101JV | 100 1/16W | [M] |
| RA5101 | EXBV4V560JV | 56 1/16W | [M] |
| RA5102 | EXBV8V560JV | 56 1/16W | [M] |
| RA5103 | EXBV4V560JV | 56 1/16W | [M] |
| RA6201 | EXBV4V472JV | 4.7K 1/16W | [M] |
| RA6261 | EXBV4V103JV | 10K 1/16W | [M] |
| RA6351 | EXBV4V472JV | 4.7K 1/16W | [M] |
| | | | |
| | | CAPACITORS | |

| Ref. No. | Part No. | Part Name & Description | Remarks |
|---|---|---|---|
| | | | |
| C201 | ECUV1H104KBV | 0.1 50V | [M] |
| C202 | ECUV1H101JCV | 100P 50V | [M] |
| C203 | ECUV1H101JCV | 100P 50V | [M] |
| C204 | ECUV1H101JCV | 100P 50V | [M] |
| C205 | ECUV1H101JCV | 100P 50V | [M] |
| C206 | ECEA1HKA010B | 1 50V | [M] |
| C207 | ECJ1VC1H220J | 22P 50V | [M] |
| C208 | ECJ1VC1H220J | 22P 50V | [M] |
| C209 | ECJ1VC1H180J | 18P 50V | [M] |
| C210 | ECJ1VC1H220J | 22P 50V | [M] |
| C211 | ECUV1H104KBV | 0.1 50V | [M] |
| C212 | ECUV1H101JCV | 100P 50V | [M] |
| C213 | ECUV1H101JCV | 100P 50V | [M] |
| C214 | ECUV1H101JCV | 100P 50V | [M] |
| C215 | ECUV1H101JCV | 100P 50V | [M] |
| C216 | ECUV1H101JCV | 100P 50V | [M] |
| C217 | ECUV1H101JCV | 100P 50V | [M] |
| C218 | ECUV1H101JCV | 100P 50V | [M] |
| C219 | ECUV1H104KBV | 0.1 50V | [M] |
| C220 | ECUV1H101JCV | 100P 50V | [M] |
| C221 | ECUV1H101JCV | 100P 50V | [M] |
| C222 | ECUV1H101JCV | 100P 50V | [M] |
| C223 | ECUV1H101JCV | 100P 50V | [M] |
| C224 | ECEA1CKA100B | 10 16V | [M] |
| C225 | ECEA1CKA100B | 10 16V | [M] |
| C226 | ECUV1H104KBV | 0.1 50V | [M] |
| C227 | ECJ1VB1H102K | 1000P 50V | [M] |
| C228 | ECJ1VB1H471K | 470P 50V | [M] |
| C229 | ECJ1VB1H471K | 470P 50V | [M] |
| C230 | ECJ1VB1H471K | 470P 50V | [M] |
| C231 | ECJ1VB1H471K | 470P 50V | [M] |
| C232 | ECUV1H101JCV | 100P 50V | [M] |
| C233 | ECUV1H101JCV | 100P 50V | [M] |
| C234 | ECUV1H101JCV | 100P 50V | [M] |
| C235 | ECUV1H101JCV | 100P 50V | [M] |
| C236 | ECUV1H101JCV | 100P 50V | [M] |
| C237 | ECUV1H104KBV | 0.1 50V | [M] |
| C238 | ECJ1VB1H103K | 0.01 50V | [M] |
| C239 | ECUV1H101JCV | 100P 50V | [M] |
| C240 | ECEA1HKA010B | 1 50V | [M] |
| C241 | ECEA1HKA2R2B | 2.2 50V | [M] |
| C242 | F2A0J222A247 | 2200P 6.3V | [M] |
| C243 | ECEA0JKA101B | 100 6.3V | [M] |
| C244 | ECUV1H101JCV | 100P 50V | [M] |
| C245 | ECUV1H101JCV | 100P 50V | [M] |
| C246 | ECUV1H101JCV | 100P 50V | [M] |
| C247 | ECUV1H101JCV | 100P 50V | [M] |
| C248 | ECUV1H101JCV | 100P 50V | [M] |
| C249 | ECUV1H101JCV | 100P 50V | [M] |
| C250 | ECUV1H101JCV | 100P 50V | [M] |
| C251 | ECUV1H101JCV | 100P 50V | [M] |
| C252 | ECUV1H101JCV | 100P 50V | [M] |
| C253 | ECUV1H101JCV | 100P 50V | [M] |
| C254 | ECUV1H101JCV | 100P 50V | [M] |
| C255 | ECJ1VB1H103K | 0.01 50V | [M] |
| C256 | ECUV1H101JCV | 100P 50V | [M] |
| C257 | ECA1CAK330XB | 33 16V | [M] |
| C258 | ECEA0JKA101B | 100 6.3V | [M] |
| C259 | ECEA0JKA221B | 220 6.3V | [M] |
| C260 | ECEA1HKA2R2B | 2.2 50V | [M] |
| C261 | ECUV1H104KBV | 0.1 50V | [M] |
| C262 | ECUV1H101JCV | 100P 50V | [M] |
| C263 | ECEA1CKA470B | 47 16V | [M] |
| C301 | ECEA1CKA100B | 10 16V | [M] |
| C302 | ECEA1CKA100B | 10 16V | [M] |
| C303 | ECUV1H221JCV | 220P 50V | [M] |
| C304 | ECUV1H221JCV | 220P 50V | [M] |
| C305 | ECJ1VB1H102K | 1000P 50V | [M] |
| C306 | ECJ1VB1H102K | 1000P 50V | [M] |
| C307 | ECEA1CKA100B | 10 16V | [M] |
| C308 | ECEA1CKA100B | 10 16V | [M] |
| C309 | ECEA1CKA100B | 10 16V | [M] |
| C310 | ECEA1CKA100B | 10 16V | [M] |

| Ref. No. | Part No. | Part Name & Description | Remarks |
|---|---|---|---|
| C311 | ECUV1H101JCV | 100P 50V | [M] |
| C312 | ECUV1H101JCV | 100P 50V | [M] |
| C313 | ECEA1CKA100B | 10 16V | [M] |
| C314 | ECEA1CKA100B | 10 16V | [M] |
| C315 | ECA1CM471B | 470 16V | [M] |
| C316 | ECEA1CKA470B | 47 16V | [M] |
| C317 | ECKR1H103ZF5 | 0.01 50V | [M] |
| C319 | ECJ1VB1H182K | 1800P 50V | [M] |
| C320 | ECJ1VB1H182K | 1800P 50V | [M] |
| C321 | ECUV1H104KBV | 0.1 50V | [M] |
| C322 | ECUV1H104KBV | 0.1 50V | [M] |
| C323 | ECUV1H104KBV | 0.1 50V | [M] |
| C324 | ECUV1H104KBV | 0.1 50V | [M] |
| C325 | ECEA1HKAR33B | 0.33 50V | [M] |
| C326 | ECA1CM471B | 470 16V | [M] |
| C327 | ECJ1VC1H470K | 47P 50V | [M] |
| C328 | ECJ1VC1H470K | 47P 50V | [M] |
| C329 | ECEA1CKA100B | 10 16V | [M] |
| C330 | ECEA1CKA100B | 10 16V | [M] |
| C332 | ECJ1VB1H103K | 0.01 50V | [M] |
| C333 | ECJ1VB1H103K | 0.01 50V | [M] |
| C334 | ECA0JAM102XB | 1000 6.3V | [M] |
| C335 | ECEA0JKA101B | 100 6.3V | [M] |
| C336 | ECEA1CKA470B | 47 16V | [M] |
| C337 | ECJ1VB1H103K | 0.01 50V | [M] |
| C338 | ECUV1H101JCV | 100P 50V | [M] |
| C339 | ECEA1CKA470B | 47 16V | [M] |
| C340 | ECUV1H104KBV | 0.1 50V | [M] |
| C341 | ECA0JAM102XB | 1000 6.3V | [M] |
| C342 | ECEA0JKA101B | 100 6.3V | [M] |
| C343 | ECJ1VC1H470K | 47P 50V | [M] |
| C344 | ECJ1VB1H103K | 0.01 50V | [M] |
| C345 | ECUV1H104KBV | 0.1 50V | [M] |
| C346 | ECA0JAM102XB | 1000 6.3V | [M] |
| C347 | ECUV1H104KBV | 0.1 50V | [M] |
| C348 | ECEA0JKA101B | 100 6.3V | [M] |
| C349 | ECEA1CKA470B | 47 16V | [M] |
| C352 | ECJ1VB1H102K | 1000P 50V | [M] |
| C353 | ECJ1VB1H102K | 1000P 50V | [M] |
| C356 | ECJ1VB1H103K | 0.01 50V | [M] |
| C357 | ECJ1VB1H103K | 0.01 50V | [M] |
| C359 | ECJ1VC1H470J | 47P 50V | [M] |
| C360 | ECUV1H104KBV | 0.1 50V | [M] |
| C362 | ECJ1VC1H470J | 47P 50V | [M] |
| C363 | ECUV1H104KBV | 0.1 50V | [M] |
| C364 | ECJ1VB1H102K | 1000P 50V | [M] |
| C365 | ECJ1VB1H102K | 1000P 50V | [M] |
| C366 | ECEA1CKA100B | 10 16V | [M] |
| C367 | ECEA1CKA100B | 10 16V | [M] |
| C368 | ECEA1CKA100B | 10 16V | [M] |
| C369 | ECEA1CKA100B | 10 16V | [M] |
| C370 | ECJ1VB1H682K | 6800P 50V | [M] |
| C371 | ECJ1VB1H682K | 6800P 50V | [M] |
| C372 | ECEA1HKA010B | 1 50V | [M] |
| C373 | ECJ1VB1H682K | 6800P 50V | [M] |
| C374 | ECJ1VB1H682K | 6800P 50V | [M] |
| C375 | ECEA1HKA010B | 1 50V | [M] |
| C376 | ECUV1C333KBV | 0.033 16V | [M] |
| C377 | ECJ2VB1H472K | 4700P 50V | [M] |
| C378 | ECEA1HKA3R3B | 3.3 50V | [M] |
| C379 | ECUV1C333KBV | 0.033 16V | [M] |
| C380 | ECJ2VB1H472K | 4700P 50V | [M] |
| C381 | ECEA1HKA3R3B | 3.3 50V | [M] |
| C384 | ECJ1VB1H332K | 3300P 50V | [M] |
| C385 | ECJ1VB1H332K | 3300P 50V | [M] |
| C386 | ECEA1HKN4R7B | 4.7 50V | [M] |
| C387 | ECEA1HKA4R7B | 4.7 50V | [M] |
| C388 | ECJ1VB1H102K | 1000P 50V | [M] |
| C389 | ECEA1CKA470B | 47 16V | [M] |
| C390 | ECEA0JKA331B | 330 6.3V | [M] |
| C391 | ECA0JM331B | 330 6.3V | [M] |
| C392 | ECEA0JKA221B | 220 6.3V | [M] |
| C393 | ECEA1HKAR68B | 0.68 50V | [M] |
| C394 | ECEA1HKAR68B | 0.68 50V | [M] |

| Ref. No. | Part No. | Part Name & Description | Remarks |
|---|---|---|---|
| C395 | ECUV1H101JCV | 100P 50V | [M] |
| C398 | ECUV1H104KBV | 0.1 50V | [M] |
| C401 | ECA1EM331B | 330 25V | [M] |
| C402 | EEUFC0J821B | 820P 6.3V | [M] |
| C403 | ECA1EM331B | 330 25V | [M] |
| C404 | EEUFC0J821B | 820P 6.3V | [M] |
| C405 | ECUVNA105KBV | 1 10V | [M] |
| C406 | ECEA1CKA470B | 47 16V | [M] |
| C407 | ECA0JM471B | 470 6.3V | [M] |
| C408 | ECEA1CKA100B | 10 16V | [M] |
| C409 | ECEA0JKA221B | 220 6.3V | [M] |
| C410 | ECEA1CKA470B | 47 16V | [M] |
| C411 | F2A0J471A202 | 470P 6.3V | [M] |
| C412 | ECA1EM332B | 3300 25V | [M] |
| C413 | ECA1CAK101XB | 100 16V | [M] |
| C414 | ECJ1VB1H103K | 0.01 50V | [M] |
| C415 | ECJ1VB1H103K | 0.01 50V | [M] |
| C416 | ECEA1CKA100B | 10 16V | [M] |
| C417 | ECUV1H104KBV | 0.1 50V | [M] |
| C418 | ECUV1H104KBV | 0.1 50V | [M] |
| C419 | ECUV1H104KBV | 0.1 50V | [M] |
| C420 | ECUV1H104KBV | 0.1 50V | [M] |
| C421 | ECUV1H104KBV | 0.1 50V | [M] |
| C422 | ECUV1H104KBV | 0.1 50V | [M] |
| C423 | ECJ1VB1H102K | 1000P 50V | [M] |
| C424 | ECJ1VB1H102K | 1000P 50V | [M] |
| C425 | ECJ1VB1H102K | 1000P 50V | [M] |
| C501 | ECBT1H103KB5 | 0.01 50V | [M] |
| C502 | ECBT1H821KB5 | 820P 50V | [M] |
| C503 | ECBT1H821KB5 | 820P 50V | [M] |
| C504 | ECBT1H821KB5 | 820P 50V | [M] |
| C505 | ECBT1H821KB5 | 820P 50V | [M] |
| C506 | ECBT1H150JC5 | 15P 50V | [M] |
| C507 | ECBT1H150JC5 | 15P 50V | [M] |
| C508 | ECBT1H150JC5 | 15P 50V | [M] |
| C509 | ECBT1H150JC5 | 15P 50V | [M] |
| C510 | F2A0J221A245 | 220P 6.3V | [M] |
| C511 | ECBT1H102KB5 | 1000P 50V | [M] |
| C512 | ECKR2H103ZF5 | 0.01 500V | [M] |
| C514 | ECBT1H102KB5 | 1000P 50V | [M] |
| C515 | ECBT1H102KB5 | 1000P 50V | [M] |
| C517 | ECA1VAM222XB | 2200 35V | [M] |
| C518 | ECA1VAM222XB | 2200 35V | [M] |
| C519 | F1D1H473A012 | 0.047 50V | [M] |
| C520 | F1D1H473A012 | 0.047 50V | [M] |
| C521 | F1D1H473A012 | 0.047 50V | [M] |
| C522 | F1D1H473A012 | 0.047 50V | [M] |
| C524 | ECQE1104KF3 | 0.1 100V | [M] |
| C525 | ECBT1H223KB5 | 0.022 50V | [M] |
| C526 | ECBT1H223KB5 | 0.022 50V | [M] |
| C527 | ECBT1H223KB5 | 0.022 50V | [M] |
| C528 | ECBT1H223KB5 | 0.022 50V | [M] |
| C529 | F1D1H473A012 | 0.047 50V | [M] |
| C561 | ECKR1H103ZF5 | 0.01 50V | [M] |
| C562 | ECA1HM470B | 47 50V | [M] |
| C565 | ECA1HM470B | 47 50V | [M] |
| C568 | ECA1HM470B | 47 50V | [M] |
| C578 | ECKR1H103ZF5 | 0.01 50V | [M] |
| C580 | ECKR1H103ZF5 | 0.01 50V | [M] |
| C581 | ECA1HM470B | 47 50V | [M] |
| C582 | ECA1CM102B | 1000 16V | [M] |
| C584 | ECKR1H103ZF5 | 0.01 50V | [M] |
| C585 | ECA1HAK4R7XB | 4.7 50V | [M] |
| C586 | ECQE1104KF3 | 0.1 100V | [M] |
| C587 | ECA2AM100B | 10 100V | [M] |
| C588 | ECKR1H103ZF5 | 0.01 50V | [M] |
| C589 | ECA2AM101B | 100 100V | [M] |
| C590 | ECA1HM101B | 100 50V | [M] |
| C601 | ECUV1H473KBV | 0.047 50V | [M] |
| C602 | ECUV1H473KBV | 0.047 50V | [M] |
| C603 | ECJ1VB1H103K | 0.01 50V | [M] |
| C604 | ECEA0JKA470B | 47 6.3V | [M] |
| C605 | ECA1CAK220XB | 22 16V | [M] |
| C606 | ECA1CAK220XB | 22 16V | [M] |

| Ref. No. | Part No. | Part Name & Description | Remarks |
|---|---|---|---|
| C607 | ECEA0JKA101B | 100 6.3V | [M] |
| C608 | ECEA0JKA101B | 100 6.3V | [M] |
| C609 | ECUV1H104KBV | 0.1 50V | [M] |
| C610 | ECJ1VB1H102K | 1000P 50V | [M] |
| C611 | ECJ1VB1H102K | 1000P 50V | [M] |
| C612 | ECUV1H104KBV | 0.1 50V | [M] |
| C613 | ECEA1HKA220B | 22 50V | [M] |
| C614 | ECUV1H104KBV | 0.1 50V | [M] |
| C615 | ECJ1VC1H470K | 47P 50V | [M] |
| C616 | ECUV1H104KBV | 0.1 50V | [M] |
| C617 | ECUV1H101JCV | 100P 50V | [M] |
| C618 | ECUV1H101JCV | 100P 50V | [M] |
| C619 | ECUV1H101JCV | 100P 50V | [M] |
| C620 | ECUV1H101JCV | 100P 50V | [M] |
| C621 | ECUV1H104KBV | 0.1 50V | [M] |
| C622 | ECUV1H104KBV | 0.1 50V | [M] |
| C623 | ECUV1H101JCV | 100P 50V | [M] |
| C624 | ECUV1H101JCV | 100P 50V | [M] |
| C625 | ECJ1VB1H102K | 1000P 50V | [M] |
| C626 | ECJ1VB1H102K | 1000P 50V | [M] |
| C706 | ECEA0JKA470B | 47 6.3V | [M] |
| C707 | ECJ1VC1H102J | 1000P 50V | [M] |
| C708 | ECJ1VB1H103K | 0.01 50V | [M] |
| C709 | ECUV1H470JCV | 47P 50V | [M] |
| C710 | ECEA1HKA100B | 10 50V | [M] |
| C711 | F1H1H331A765 | 330P 50V | [M] |
| C712 | ECEA1HKA100B | 10 50V | [M] |
| C713 | F1H1H561A765 | 560P 50V | [M] |
| C714 | ECUV1H470JCV | 47P 50V | [M] |
| C715 | ECJ1VC1H220J | 22P 50V | [M] |
| C716 | ECUV1H271KBV | 270P 50V | [M] |
| C717 | ECUV1H331KBN | 330P 50V | [M] |
| C718 | ECJ1VC1H220J | 22P 50V | [M] |
| C719 | ECUV1H271KBV | 270P 50V | [M] |
| C720 | ECUV1H331KBN | 330P 50V | [M] |
| C721 | ECJ1VC1H220J | 22P 50V | [M] |
| C722 | ECUV1H271KBV | 270P 50V | [M] |
| C723 | ECUV1H331KBN | 330P 50V | [M] |
| C724 | ECJ1VB1H103K | 0.01 50V | [M] |
| C725 | ECJ1VB1H102K | 1000P 50V | [M] |
| C726 | ECJ1VB1H102K | 1000P 50V | [M] |
| C727 | ECEA1CKA470B | 47 16V | [M] |
| C728 | ECKR1H103ZF5 | 0.01 50V | [M] |
| C729 | ECA1CAK100XB | 10 16V | [M] |
| C730 | ECKR1H103ZF5 | 0.01 50V | [M] |
| C731 | ECA1CAK101XB | 100 16V | [M] |
| C732 | ECA1CAK100XB | 10 16V | [M] |
| C733 | ECKR2H103ZF5 | 0.01 500V | [M] |
| C734 | ECEA1HKA100B | 10 50V | [M] |
| C735 | ECJ1VB1C823K | 0.082 16V | [M] |
| C736 | ECJ1VB1C823K | 0.082 16V | [M] |
| C737 | ECEA1CKA100B | 10 16V | [M] |
| C738 | ECJ1VB1H222K | 2200P 50V | [M] |
| C739 | ECJ1VB1H102K | 1000P 50V | [M] |
| C740 | ECUV1H101JCV | 100P 50V | [M] |
| C752 | ECA1HAK4R7XB | 4.7 50V | [M] |
| C753 | ECUV1H104KBV | 0.1 50V | [M] |
| C754 | ECUV1H101JCV | 100P 50V | [M] |
| C755 | ECUV1H101JCV | 100P 50V | [M] |
| C756 | ECUV1H101JCV | 100P 50V | [M] |
| C758 | ECUV1H473KBV | 0.047 50V | [M] |
| C765 | ECUV1H473KBV | 0.047 50V | [M] |
| C766 | ECJ1VB1H102K | 1000P 50V | [M] |
| C2001 | F2G0J1010013 | 100P 6.3V | [M] |
| C2002 | EEVFC0J101P | 100P 6.3V | [M] |
| C2003 | ECUVNC104ZFV | 0.1 16V | [M] |
| C2004 | ECUVNC104ZFV | 0.1 16V | [M] |
| C2005 | ECUVNC104ZFV | 0.1 16V | [M] |
| C2006 | ECUVNC104ZFV | 0.1 16V | [M] |
| C2011 | ECUV1C104KBV | 0.1 16V | [M] |
| C2012 | ECUV1C104KBV | 0.1 16V | [M] |
| C2015 | ECJ1VC1H102J | 1000P 50V | [M] |
| C2016 | ECUV1H821JCV | 820P 50V | [M] |
| C2021 | ECJ1VB1H472K | 4700P 50V | [M] |

| Ref. No. | Part No. | Part Name & Description | Remarks |
|---|---|---|---|
| C2023 | ECJ1VC1H102J | 1000P 50V | [M] |
| C2031 | ECJ1VF1A105Z | 1 10V | [M] |
| C2032 | ECJ1VF1A105Z | 1 10V | [M] |
| C2033 | F1H0J1050013 | 1 6.3V | [M] |
| C2034 | ECJ1VB1H152K | 1500P 50V | [M] |
| C2035 | ECJ1VC1H221J | 220P 50V | [M] |
| C2036 | ECUV1C104KBV | 0.1 16V | [M] |
| C2037 | ECJ1VB1C103K | 0.01 16V | [M] |
| C2051 | ECUV1C333KBV | 0.033 16V | [M] |
| C2052 | ECJ1VC1H330J | 33P 50V | [M] |
| C2053 | ECUVNC104ZFV | 0.1 16V | [M] |
| C2054 | ECUVNC104ZFV | 0.1 16V | [M] |
| C2055 | ECUVNC104ZFV | 0.1 16V | [M] |
| C2056 | ECJ1VB1C103K | 0.01 16V | [M] |
| C2057 | ECJ1VC1H181J | 180P 50V | [M] |
| C2058 | ECJ1VB1C183K | 0.018 16V | [M] |
| C2059 | ECJ1VB1H562K | 5600P 50V | [M] |
| C2060 | ECUV1C104KBV | 0.1 16V | [M] |
| C2501 | EEVFC0J221P | 220P 6.3V | [M] |
| C2502 | ECEV1CA101WP | 100 16V | [M] |
| C2503 | ECEV1CA220WR | 22 16V | [M] |
| C2504 | ECUVNC104ZFV | 0.1 16V | [M] |
| C2505 | ECUVNC104ZFV | 0.1 16V | [M] |
| C2506 | ECUVNC104ZFV | 0.1 16V | [M] |
| C2507 | ECUVNC104ZFV | 0.1 16V | [M] |
| C2508 | ECUVNC104ZFV | 0.1 16V | [M] |
| C2509 | EEVFC1C100R | 10P 16V | [M] |
| C2510 | ECUVNC104ZFV | 0.1 16V | [M] |
| C2511 | ECUVNC104ZFV | 0.1 16V | [M] |
| C2512 | ECUVNC104ZFV | 0.1 16V | [M] |
| C2513 | ECUVNC104ZFV | 0.1 16V | [M] |
| C3001 | F2G0J331A015 | 330P 6.3V | [M] |
| C3002 | F2G0J331A015 | 330P 6.3V | [M] |
| C3003 | ECUVNC104ZFV | 0.1 16V | [M] |
| C3004 | ECUVNC104ZFV | 0.1 16V | [M] |
| C3005 | ECUVNC104ZFV | 0.1 16V | [M] |
| C3006 | ECUVNC104ZFV | 0.1 16V | [M] |
| C3007 | ECUVNC104ZFV | 0.1 16V | [M] |
| C3008 | ECUVNC104ZFV | 0.1 16V | [M] |
| C3009 | ECUVNC104ZFV | 0.1 16V | [M] |
| C3010 | ECUVNC104ZFV | 0.1 16V | [M] |
| C3011 | ECUVNC104ZFV | 0.1 16V | [M] |
| C3012 | ECUVNC104ZFV | 0.1 16V | [M] |
| C3013 | ECUVNC104ZFV | 0.1 16V | [M] |
| C3014 | ECUVNC104ZFV | 0.1 16V | [M] |
| C3015 | ECUVNC104ZFV | 0.1 16V | [M] |
| C3016 | ECUVNC104ZFV | 0.1 16V | [M] |
| C3017 | ECUVNC104ZFV | 0.1 16V | [M] |
| C3018 | ECUVNC104ZFV | 0.1 16V | [M] |
| C3019 | D0GB331JA002 | 330 1/16W | [M] |
| C3020 | ECUVNC104ZFV | 0.1 16V | [M] |
| C3021 | ECUVNC104ZFV | 0.1 16V | [M] |
| C3022 | ECUVNC104ZFV | 0.1 16V | [M] |
| C3023 | ECUVNC104ZFV | 0.1 16V | [M] |
| C3024 | ECUVNC104ZFV | 0.1 16V | [M] |
| C3025 | ECUVNC104ZFV | 0.1 16V | [M] |
| C3026 | ECUVNC104ZFV | 0.1 16V | [M] |
| C3027 | ECUVNC104ZFV | 0.1 16V | [M] |
| C3028 | ECUVNC104ZFV | 0.1 16V | [M] |
| C3029 | ECUVNC104ZFV | 0.1 16V | [M] |
| C3031 | ECUVNC104ZFV | 0.1 16V | [M] |
| C3032 | ECUVNC104ZFV | 0.1 16V | [M] |
| C3033 | ECUVNC104ZFV | 0.1 16V | [M] |
| C3041 | ECJ1VC1H220J | 22P 50V | [M] |
| C3051 | ECUVNC104ZFV | 0.1 16V | [M] |
| C3052 | ECUVNC104ZFV | 0.1 16V | [M] |
| C3053 | ECUVNC104ZFV | 0.1 16V | [M] |
| C3054 | ECUVNC104ZFV | 0.1 16V | [M] |
| C3055 | ECUVNC104ZFV | 0.1 16V | [M] |
| C3061 | ECUVNC104ZFV | 0.1 16V | [M] |
| C3062 | ECUVNC104ZFV | 0.1 16V | [M] |
| C3063 | ECUVNC104ZFV | 0.1 16V | [M] |
| C3064 | ECUVNC104ZFV | 0.1 16V | [M] |
| C3065 | ECUVNC104ZFV | 0.1 16V | [M] |

| Ref. No. | Part No. | Part Name & Description | Remarks |
|---|---|---|---|
| C3101 | F2G0J331A015 | 330P 6.3V | [M] |
| C3102 | ECUVNC104ZFV | 0.1 16V | [M] |
| C3103 | ECUVNC104ZFV | 0.1 16V | [M] |
| C3104 | ECUVNC104ZFV | 0.1 16V | [M] |
| C3105 | F1H0J1050013 | 1 6.3V | [M] |
| C3106 | F1H0J1050013 | 1 6.3V | [M] |
| C3107 | ECUVNC104ZFV | 0.1 16V | [M] |
| C4201 | F2G0J331A015 | 330P 6.3V | [M] |
| C4202 | F3F1A106A001 | 10 10V | [M] |
| C4206 | F2G0J330A015 | 33P 6.3V | [M] |
| C4208 | ECUVNC104ZFV | 0.1 16V | [M] |
| C4209 | ECUVNC104ZFV | 0.1 16V | [M] |
| C4210 | ECUVNC104ZFV | 0.1 16V | [M] |
| C5101 | EEVHB1C100R | 10P 16V | [M] |
| C5102 | ECUVNC104ZFV | 0.1 16V | [M] |
| C5103 | ECUVNC104ZFV | 0.1 16V | [M] |
| C5111 | EEVHB0J470R | 47P 6.3V | [M] |
| C5115 | EEVHB0J470R | 47P 6.3V | [M] |
| C5123 | ECUVNC104ZFV | 0.1 16V | [M] |
| C5151 | ECUVNC104ZFV | 0.1 16V | [M] |
| C5152 | F3F1A106A001 | 10 10V | [M] |
| C5201 | ECUVNC104ZFV | 0.1 16V | [M] |
| C5202 | ECUVNC104ZFV | 0.1 16V | [M] |
| C5203 | ECUVNC104ZFV | 0.1 16V | [M] |
| C5221 | EEE0JA330WR | 33P 6.3V | [M] |
| C5222 | ECUVNC104ZFV | 0.1 16V | [M] |

| Ref. No. | Part No. | Part Name & Description | Remarks |
|---|---|---|---|
| C5223 | EEE1EA4R7SR | 4.7P 25V | [M] |
| C5225 | ECUVNC104ZFV | 0.1 16V | [M] |
| C5226 | EEE1EA4R7SR | 4.7P 25V | [M] |
| C5231 | ECUV1C104KBV | 0.1 16V | [M] |
| C5232 | ECUV1C104KBV | 0.1 16V | [M] |
| C6201 | ECUVNC104ZFV | 0.1 16V | [M] |
| C6202 | ECJ1VC1H101J | 100P 50V | [M] |
| C6251 | ECUV1C104KBV | 0.1 16V | [M] |
| C6252 | F1H0J1050013 | 1 6.3V | [M] |
| C6253 | ECJ1VB1C103K | 0.01 16V | [M] |
| C6255 | EEE0JA101SP | 100P 6.3V | [M] |
| C6261 | ECUVNC104ZFV | 0.1 16V | [M] |
| C6262 | ECUVNC104ZFV | 0.1 16V | [M] |
| C6301 | ECUVNC104ZFV | 0.1 16V | [M] |
| C6302 | ECUVNC104ZFV | 0.1 16V | [M] |
| C6311 | ECUVNC104ZFV | 0.1 16V | [M] |
| C6312 | ECUVNC104ZFV | 0.1 16V | [M] |
| C6351 | ECUVNC104ZFV | 0.1 16V | [M] |
| C6561 | EEE0JA330WR | 33P 6.3V | [M] |
| C6562 | EEE0JA330WR | 33P 6.3V | [M] |
| C6563 | ECUVNC104ZFV | 0.1 16V | [M] |
| C6564 | ECUVNC104ZFV | 0.1 16V | [M] |
| C6565 | ECJ1VC1H150J | 15P 50V | [M] |
| C6566 | ECJ1VC1H150J | 15P 50V | [M] |
| C6567 | ECUVNC104ZFV | 0.1 16V | [M] |
| C6568 | ECJ1VC1H150J | 15P 50V | [M] |

## 23.4. Packing Materials & Accessories Parts List

| Ref. No. | Part No. | Part Name & Description | Remarks |
|---|---|---|---|
| | | PACKING MATERIALS | |
| | | | |
| P1 | RPGX1036 | PACKING CASE | [M] EB |
| P1 | RPGX1037 | PACKING CASE | [M] EG |
| P1 | RPGX1038 | PACKING CASE | [M] E |
| P2 | RPNX0168 | POLYFOAM | [M] |
| P3 | RPFX0057 | MIRAMAT SHEET | [M] |
| | | | |
| | | ACCESSORIES | |
| | | | |
| A1 | N2QAJB000075 | REMOTE CONTROL | [M] |

| Ref. No. | Part No. | Part Name & Description | Remarks |
|---|---|---|---|
| A1-1 | RKK-HTR0283G | R/C BATTERY COVER | [M] |
| A2 | RJA0019-2X | AC CORD | [M] EG E ⚠ |
| A2 | RJA0053-2X | AC CORD | [M] EB ⚠ |
| A3 | RQT6817-B | O/I BOOK (En) | [M] EB E |
| A3 | RQT6818-E | O/I BOOK (Sp/Po/Cz) | [M] E |
| A3 | RQT6819-D | O/I BOOK (Ge/It/Fr) | [M] EG |
| A3 | RQT6820-H | O/I BOOK (Sw/Du/Da) | [M] EG |
| A4 | RJL1P016B15A | VIDEO CABLE | [M] |
| A4 | RSA0007-J | FM ANTENNA | [M] |
| A6 | K1YZ02000013 | DIN ADAPTOR | [M] EB |
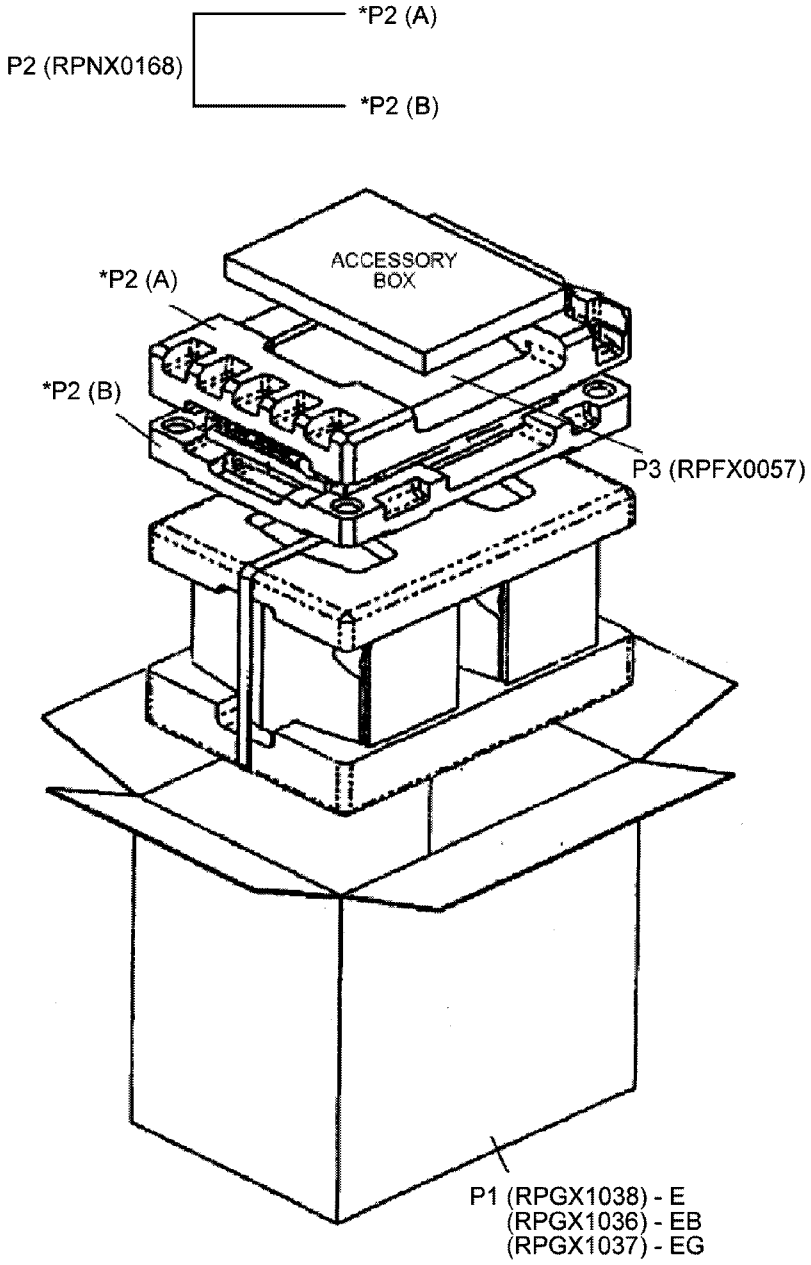
## 23.5. Packaging