Manual de Servicio

Sistema Estéreo

MODELO	UNIDAD	
SC-TM50	SA-TM50 SB-TM50	Estéreo Bafles

COMPACT disc DIGITAL AUDIO

*MASH multi-stage noise shaping

SC-TM50

Simplificado

SC-TM50

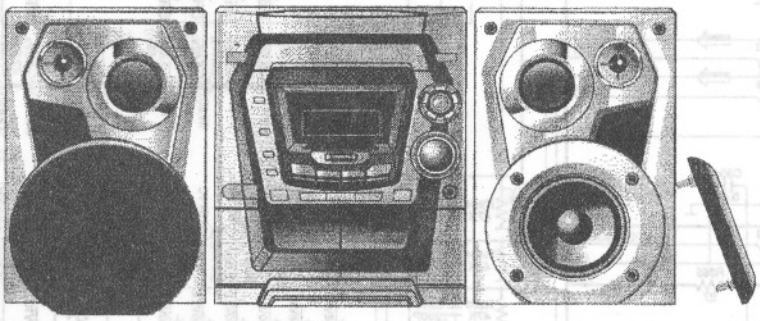

SB-TM50 SA-TM50 SB-TM50

Archive y use este simplificado junto con el CD de datos CAT.ID : A CDR02021 A0X Feb. 2002 Vol.1 y refiérase al Modelo SA-AK500PC

ESPECIFICACIONES

■ **Amplificador**

Potencia de salida RCM al 10% DAT,	
Alto	57 W por canal (6Ω), 10 kHz
Bajo	58 W por canal (6Ω), 1 kHz
Potencia de salida PMPO	3000 W

■ **General (amplificador)**

Alimentación	127 V ca ± 10% 60 Hz
Consumo de potencia	225 W
Dimensiones (b x h x l)	249 x 315 x 345 mm
Peso	7,3 kg arpox.

■ **Bafle**

Impedancia de entrada	6 Ω
Bocina Súper Tweeter	3 cm
Bocina Tweeter	6 cm
Bocina Woofer	12 cm
Dimensiones (b x h l)	210 x 315 x 260 mm
Peso	2,7 kg aprox.

Notas:

1. Toda la información contenida, está sujeta a cambios sin previo aviso. Consulte las informaciones emitidas por el departamento de ingeniería de audio.
2. Pesos y dimensiones aproximados.

■ **INDICE**

	Página
Main Circuit Diagram	2
Panel Circuit Diagram	6
Deck Circuit Diagram	9
Transformer Circuit Diagram	11
Deck Mecanism Parts List	12
Cabinet Parts List	13
Electrical Parts List	14

Panasonic

*MASH es una marca de NTT.

SCHEMATIC DIAGRAM - 4

—— : +B SIGNAL LINE
: FM/AM SIGNAL LINE
: AUX SIGNAL LINE
: CD SIGNAL LINE
: MAIN SIGNAL LINE
: PLAYBACK SIGNAL LINE
: RECORD SIGNAL LINE

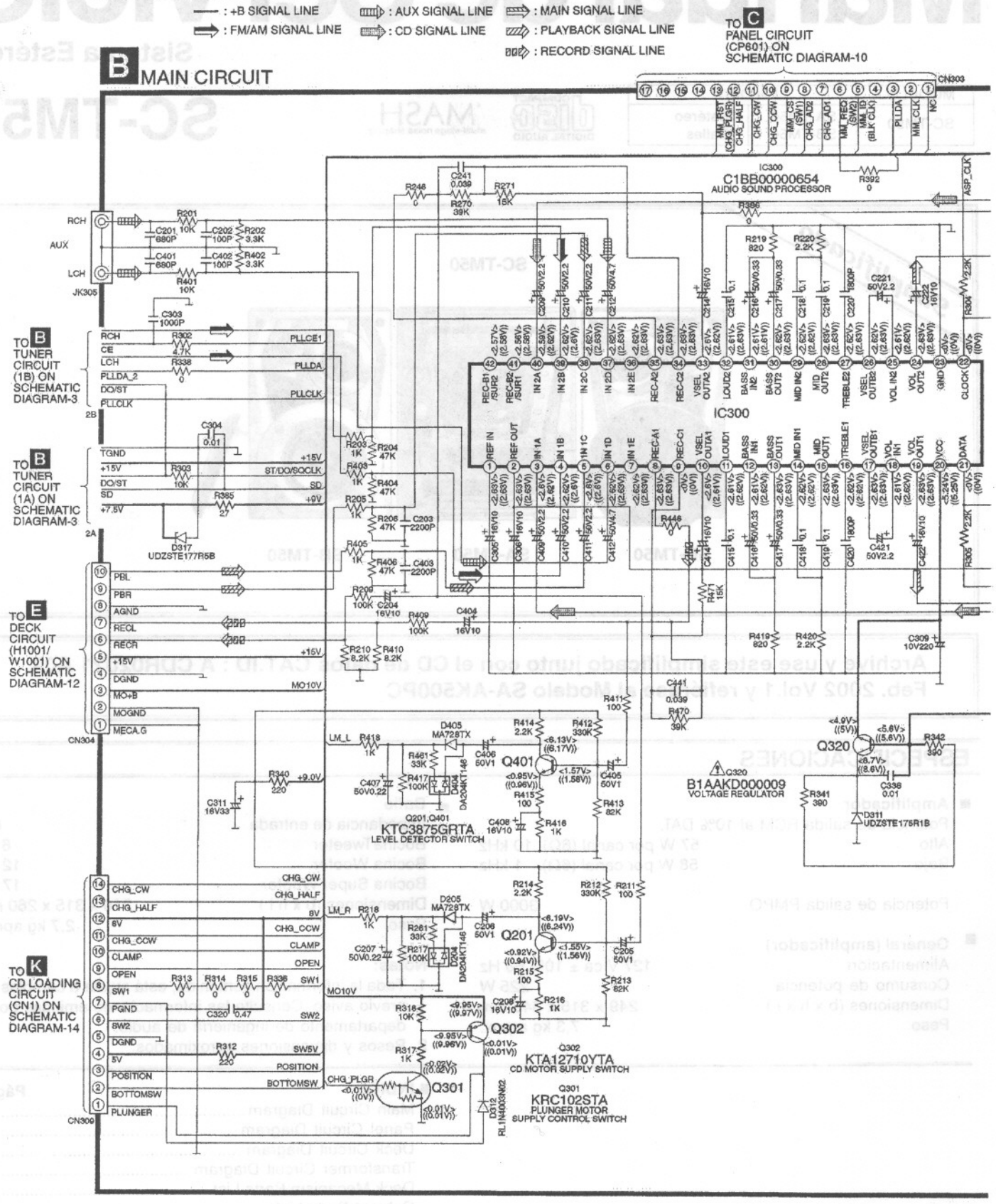

SCHEMATIC DIAGRAM - 5

—— : +B SIGNAL LINE
– – : -B SIGNAL LINE
: CD SIGNAL LINE
: MAIN SIGNAL LINE

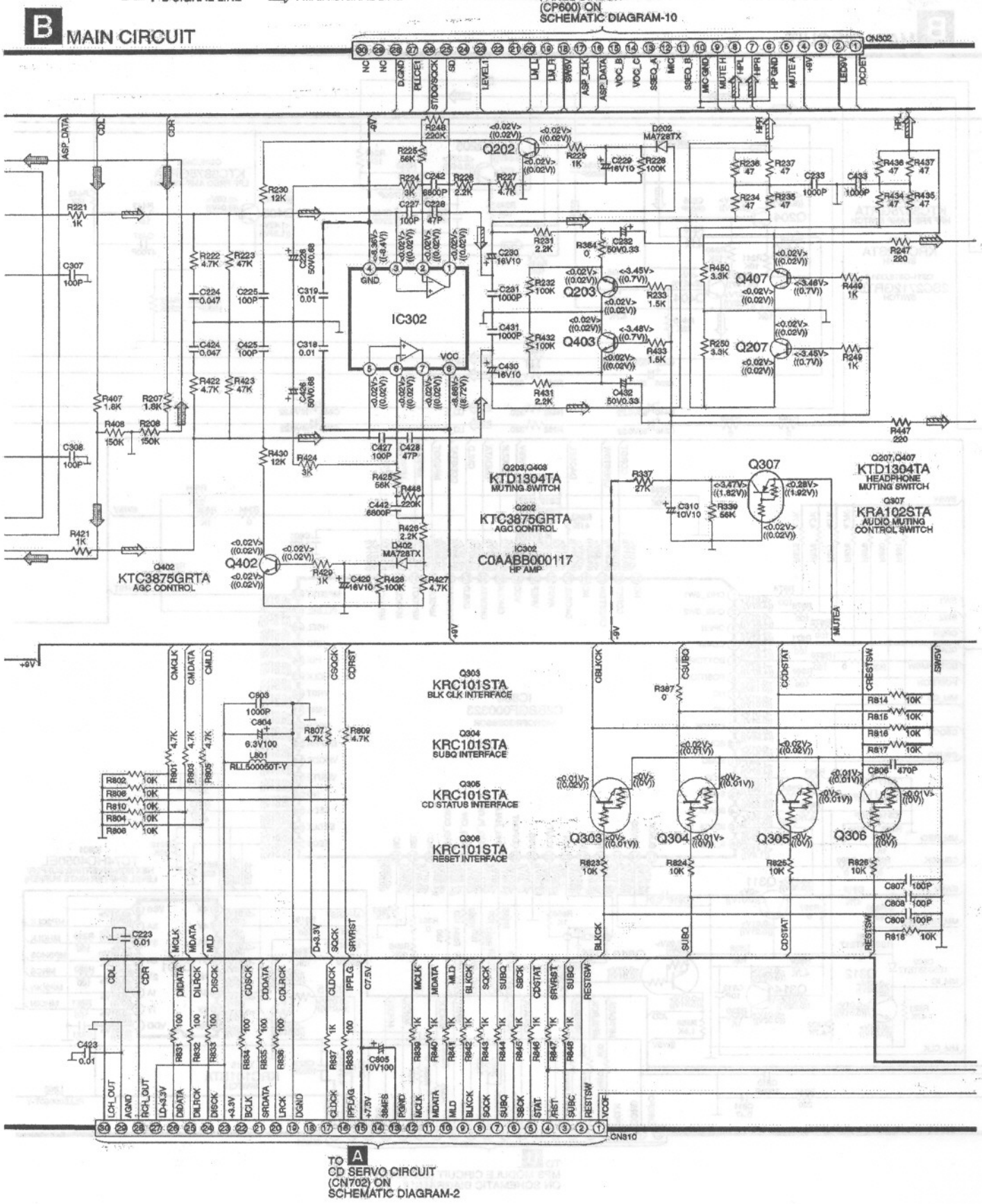

SCHEMATIC DIAGRAM - 6

—— : +B SIGNAL LINE – – : -B SIGNAL LINE ⇨ : MAIN SIGNAL LINE

B MAIN CIRCUIT

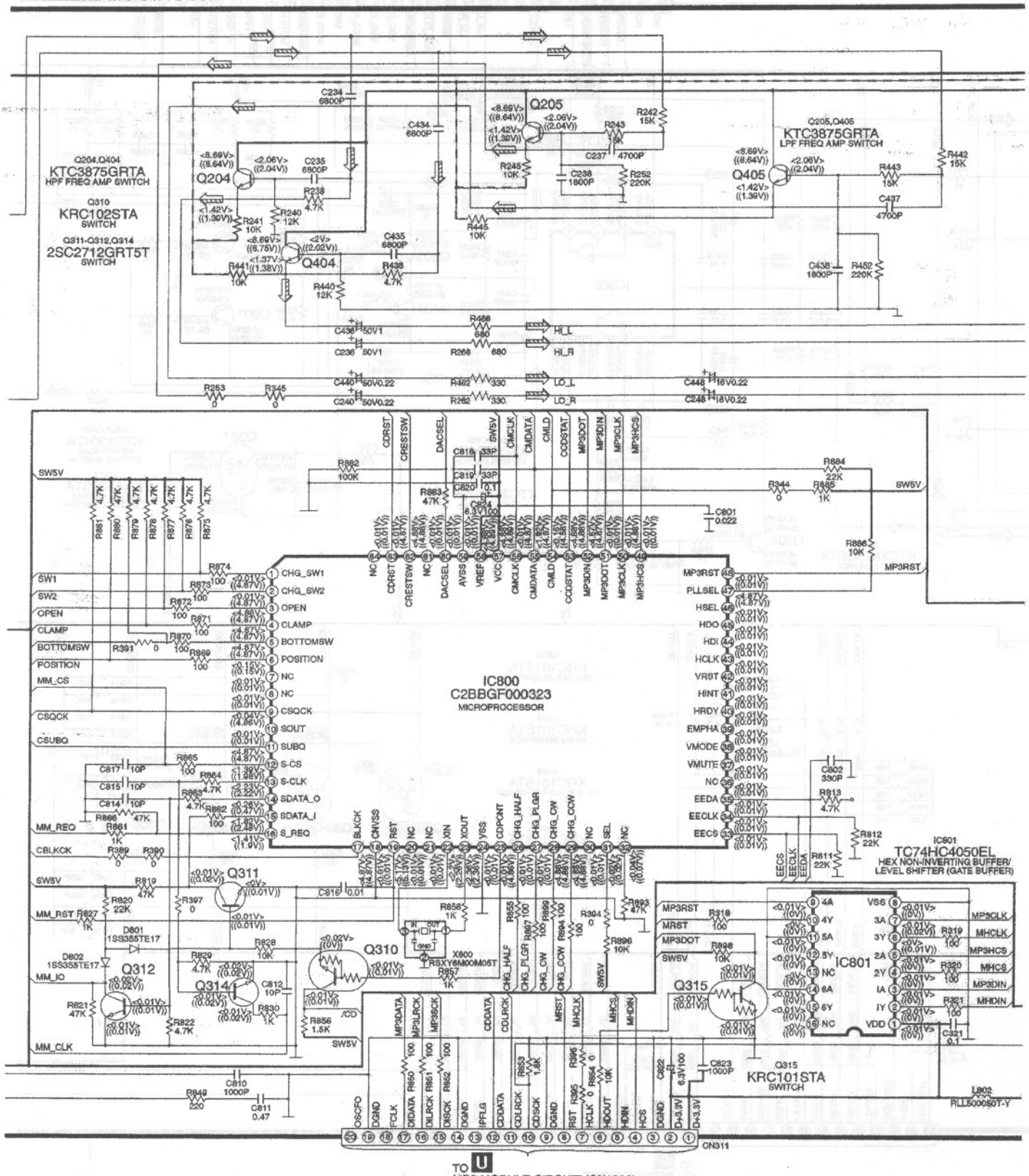

SCHEMATIC DIAGRAM - 7

—— : +B SIGNAL LINE – – : -B SIGNAL LINE ⇨ : MAIN SIGNAL LINE

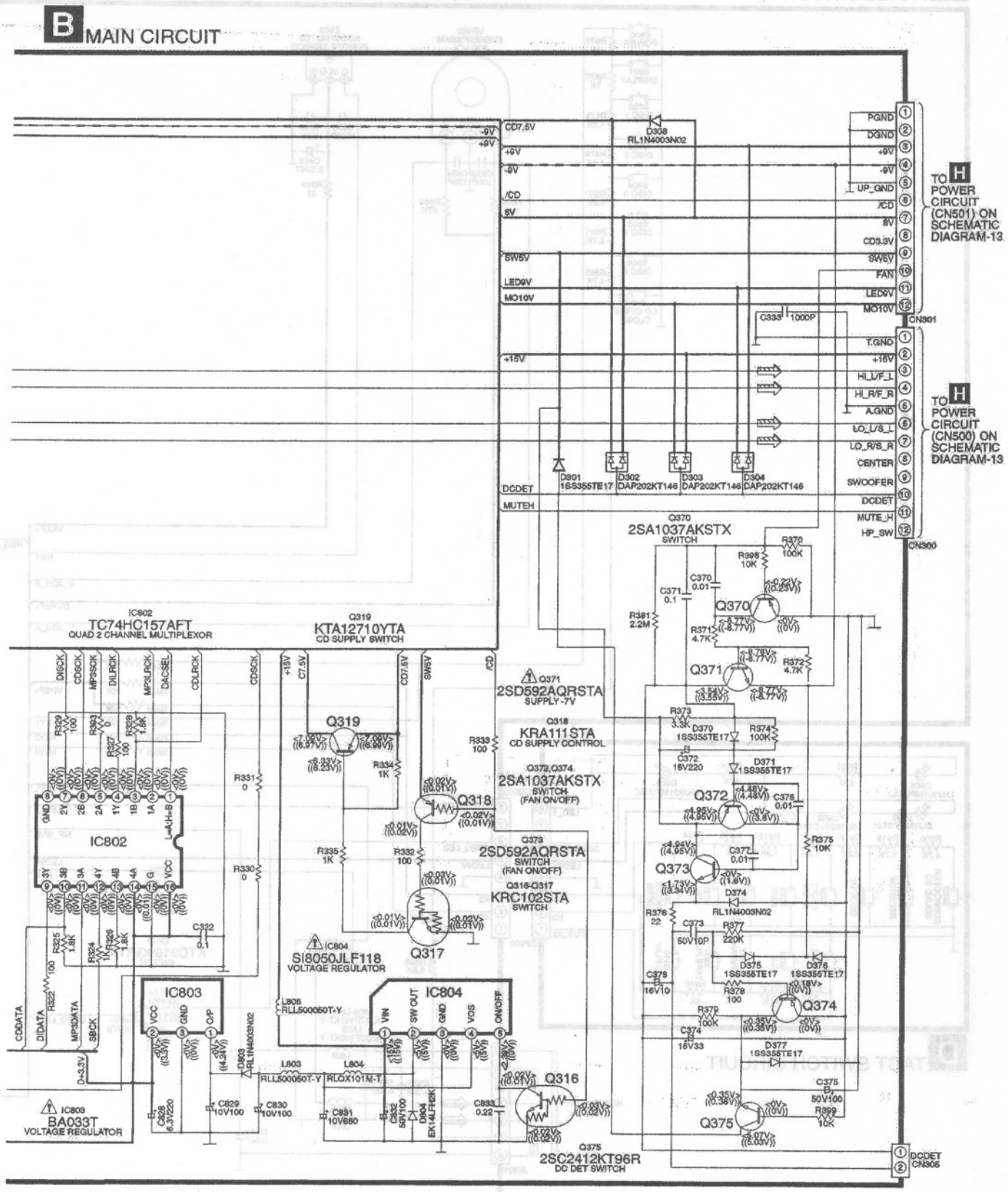

SCHEMATIC DIAGRAM - 8

—— : +B SIGNAL LINE ⇨ : MAIN SIGNAL LINE

C PANEL CIRCUIT

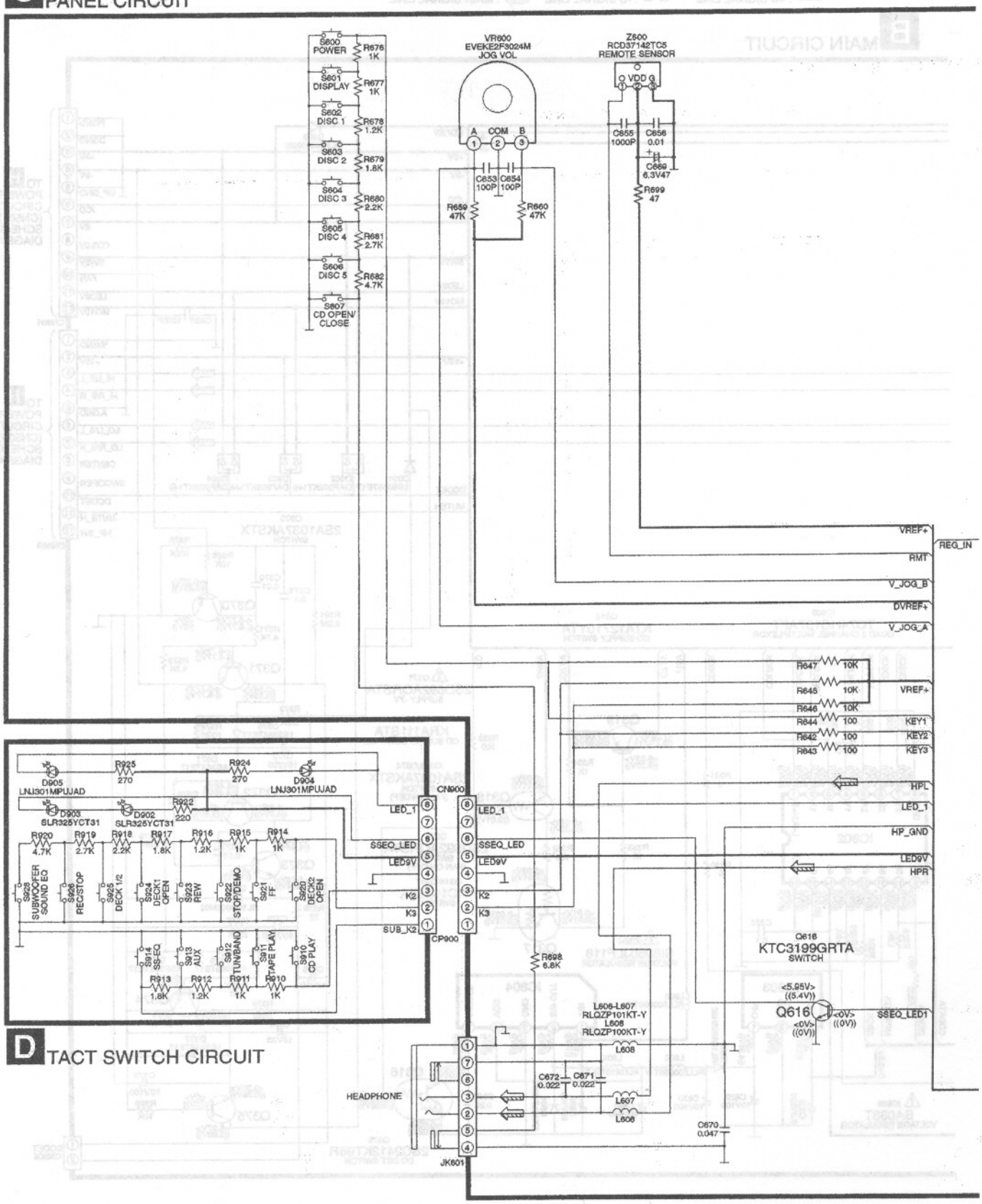

D TACT SWITCH CIRCUIT

SCHEMATIC DIAGRAM - 9

—— : +B SIGNAL LINE – – : -B SIGNAL LINE

C PANEL CIRCUIT

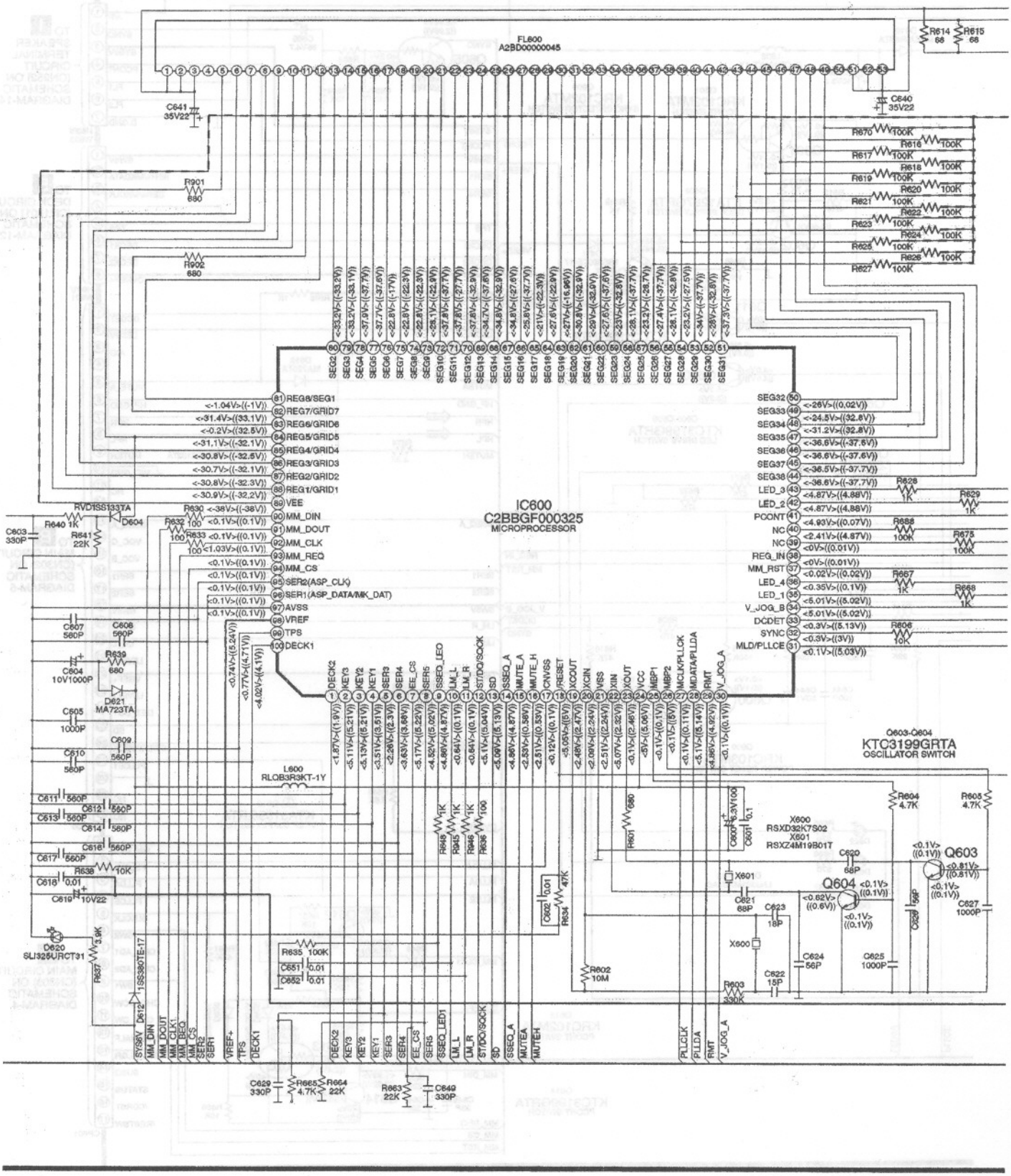

SCHEMATIC DIAGRAM - 10

—— : +B SIGNAL LINE – – : -B SIGNAL LINE ⇨ : MAIN SIGNAL LINE

C PANEL CIRCUIT

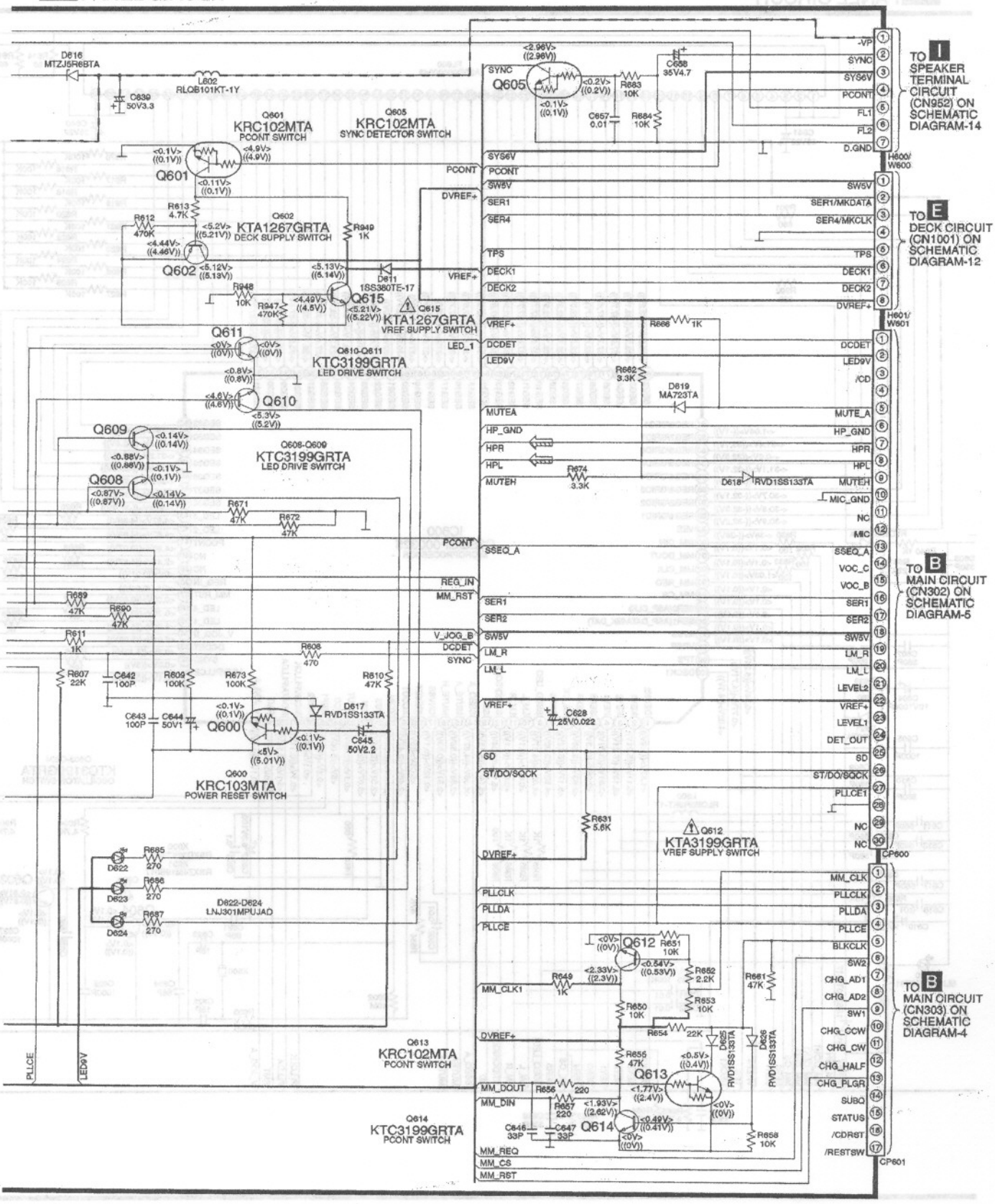

SCHEMATIC DIAGRAM - 11

—— : +B SIGNAL LINE
– – : -B SIGNAL LINE
: PLAYBACK SIGNAL LINE
: RECORD SIGNAL LINE

E DECK CIRCUIT

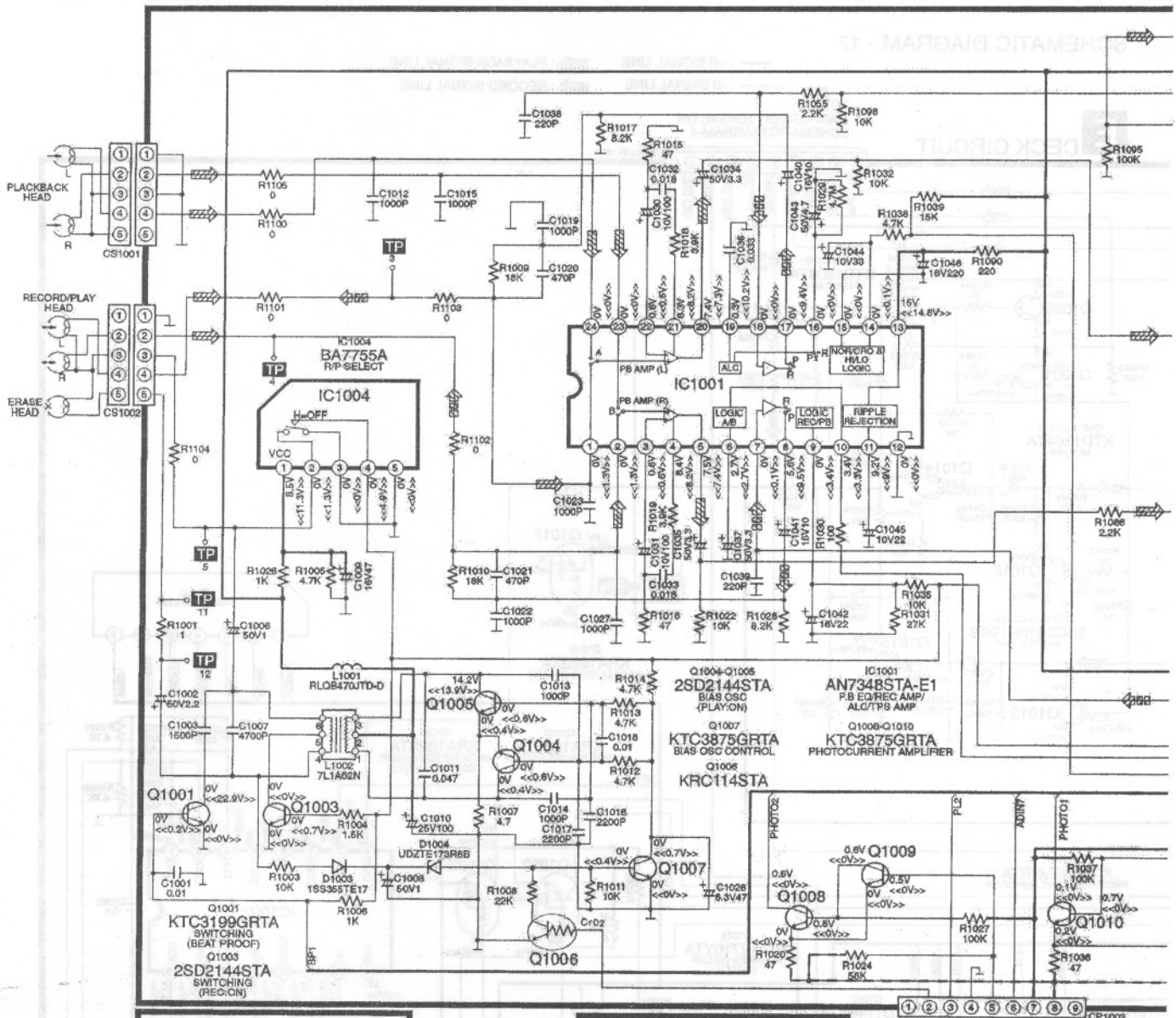

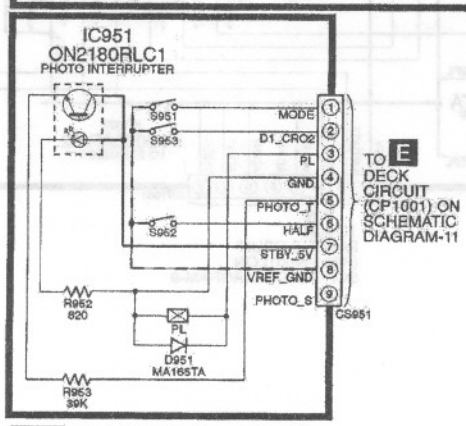

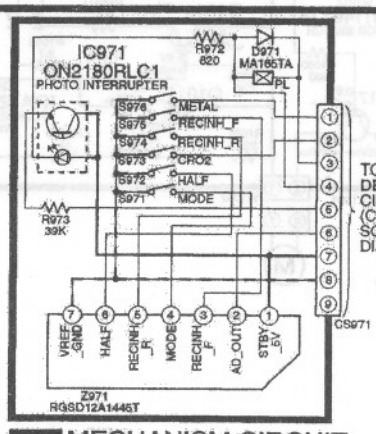

TO G MECHANISM CIRCUIT (CS971) ON SCHEMATIC DIAGRAM-10

F MECHANISM CIRCUIT (DECK 1)

G MECHANISM CIRCUIT (DECK 2)

SCHEMATIC DIAGRAM - 12

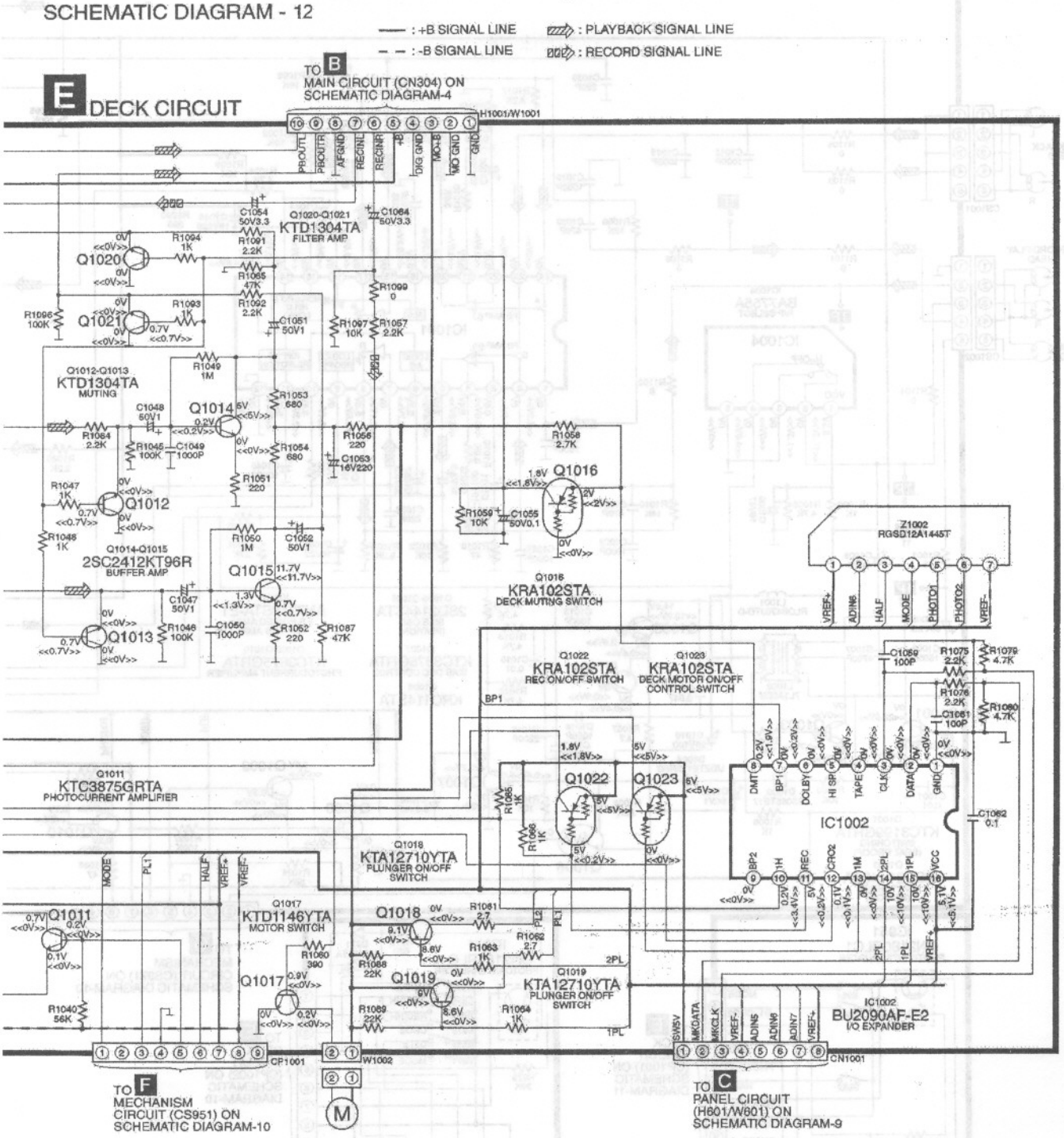

SCHEMATIC DIAGRAM - 14

—— : +B SIGNAL LINE – – : -B SIGNAL LINE ⇨ : MAIN SIGNAL LINE

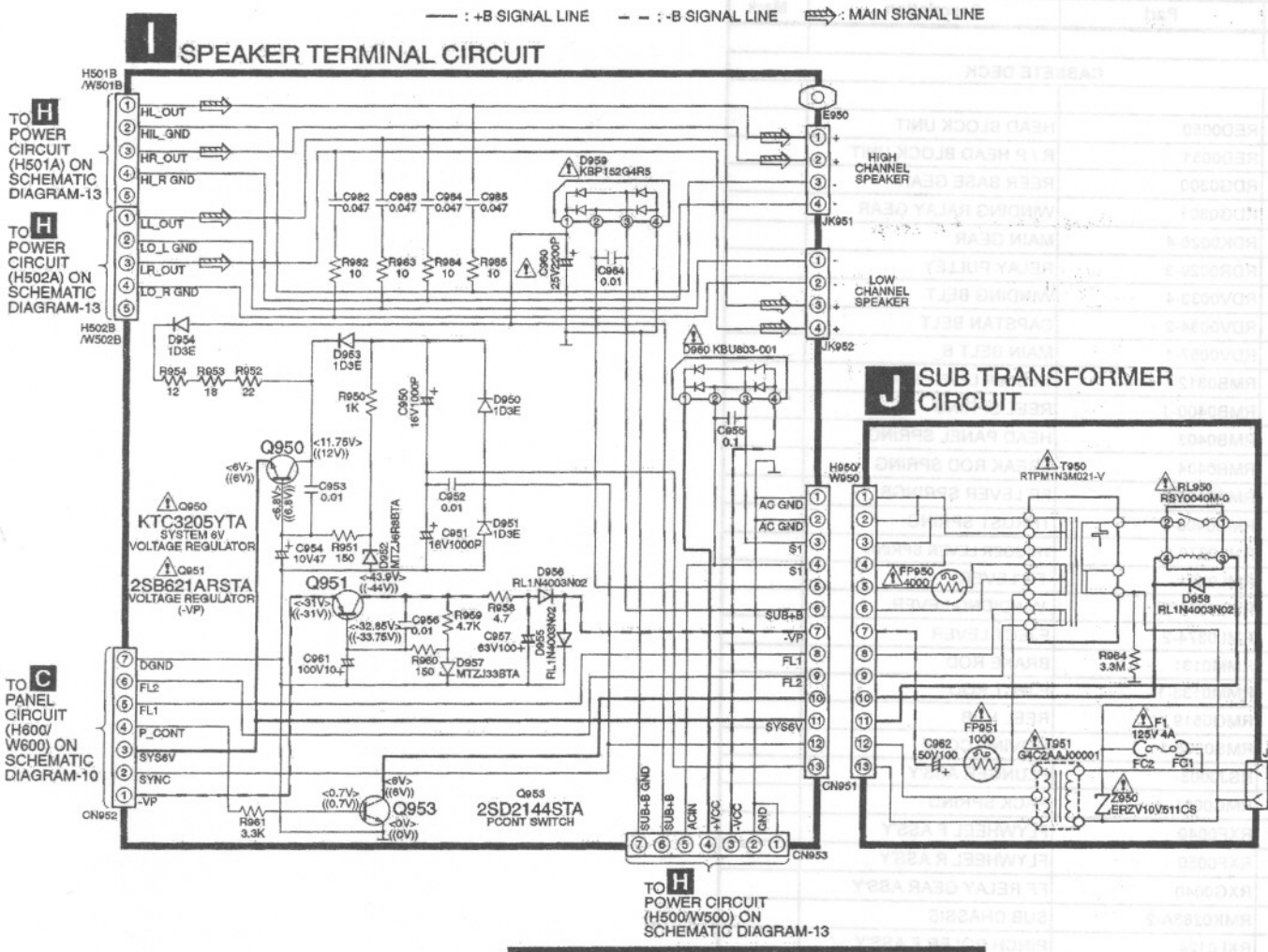

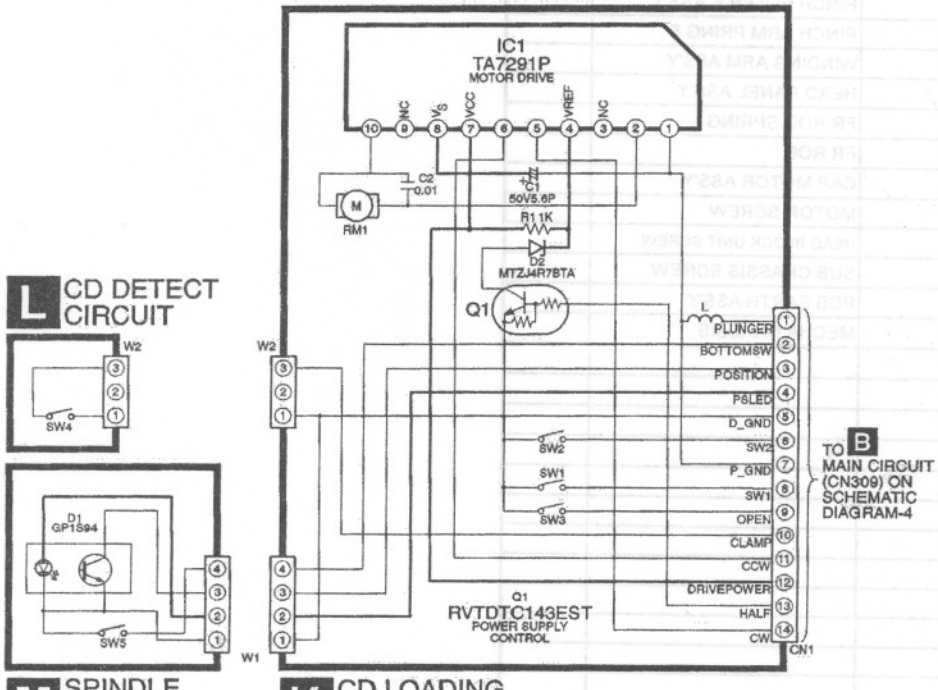

20.1.2. Deck Mechanism Parts List RAA3408

Ref	Part	Description	Mark
		CASSETE DECK	
101	RED0050	HEAD BLOCK UNIT	
102	RED0051	R / P HEAD BLOCK UNIT	
103	RDG0300	REER BASE GEAR	
104	RDG0301	WINDING RALAY GEAR	
105	RDK0026-4	MAIN GEAR	
106	RDR0029-3	RELAY PULLEY	
107	RDV0033-4	WINDING BELT	
108	RDV0034-2	CAPSTAN BELT	
109	RDV0057-1	MAIN BELT B	
110	RMB0312	TRIGGER LEVER SPRING	
111	RMB0400-J	REEL SPRING	
112	RMB0403	HEAD PANEL SPRING	
113	RMB0404	BREAK ROD SPRING	
114	RMB0406-5	FR LEVER SPRINGB	
115	RMB0408-J	THRUST SPRING	
116	RML0370-3	TRIGGER LEVER SPRING	
117	RML0371	FR LEVER	
118	RML0372-2	WINDIDNG LEVER	
119	RML0374-2	EJECT LEVER	
120	RMM0131	BRAKE ROD	
121	RMM0133-1	EJECT ROD	
122	RMQ0519	REEL HUB	
123	RMS0398-1	MOVING CORE	
124	RSJ0003	PLUNGER ASS'Y	
125	RMC0061	PACK SPRING	
126	RXF0049	FLYWHEEL F ASS'Y	
127	RXF0050	FLYWHEEL R ASS'Y	
128	RXG0040	FF RELAY GEAR ASS'Y	
129	RMK0283A-2	SUB CHASSIS	
130	RXL0124	PINCH ROLER F ASS'Y	
130-1	RMB0401	PINCH ARM PRING F	
132	RXL0126	WINDING ARM ASS'Y	
133	RXQ0412-1	HEAD PANEL ASS'Y	
133-1	RMB0405-1	FR ROD SPRING	
133-2	RMM0132-1	FR ROD	
134	REM0088	CAP MOTOR ASS'Y	
135	RHD26022	MOTOR SCREW	
136	XTW2+5L	HEAD BLOCK UNIT SCREW	
137	XTW26+10S	SUB CHASSIS SCREW	
138	XYC2+JF17	PCB EARTH ASS'Y	
139	RMK0282	MECHA CHASSIS	

20.3.2. Cabinet Parts List

Ref	Part	Description	Mark
1	REEX0075-1	30P FCC WIRE	
2	REEX0083-1	14 PIN FFC WIRE	
3	REEX0144-1	30 PIN FFC	
4	REEX0145	17 PIN FFC(PANEL TO MAIN)	
5	RGB0113-N	PANA BADGE	
6	RGKX0105-A1	CD LID	
7	RGLX0043-Q	POWER LIGHT CHIP	
8	RGLX0046-Q	LIGHTING PIECE (L)	
9	RGLX0047-Q	LIGHTING PIECE (R)	
10	RYPM0082E	FRONT PANEL	
11	RGRX0020E-BB	REAR PANEL	
12	RGUX0417Z-S	POWER BUTTON	
13	RGUX0424Z-S	DISC BUTTON	
14	RGUX0425Z-S	DISC EJECT BUTTON	
15	RGUX0426Z-S	DISPLAY BUTTON	
16	RGUX0428Z-S	DECK BUTTON	
17	RGUX0431Z-S	TAPE SELECT BUTTON	
18	RGWX0062-S	VOLUME KNOB	
19	RHD30002-H	SCREW	
20	RKA0059-K	LEG RUBBER	
22-27	RYFX0098B-S	CASS LID UNIT (L)	
21-26	RYFX0097B-S	CASS LID UNIT (R)	
23	RKFX0093-K	CASS-HOLDER (L)	
24	RKFX0094-K	CASS-HOLDER (R)	
25	RYKM0025	TOP CABINET	
28	RKWX0165-Q	REMOTE SENSOR WINDOW	
29	RGKX0104-A	FL ORNAMENT	
30	RKWX0167-H	FL WINDOW	
31	RKWX0168-A1	DISC BUTTON ORNAMENT	
33	RMBX0018	CASS.OPEN SPRING	
34	RMCX0021	TRANSISTOR CLIP	
35	RMKX0054	CD CHASSIS	
36	RKMM0013	BOTTOM CHASSIS	
37	RSC0027-3	TUNER PACK PCB RADIAL	
38	RUS757ZAA	CASSETE HALF SPRING	
39	RXGX0001	DAMPER GEAR	
41	RYQX0052-S	FUNCTION BUTTON UNIT	
42	RMNX0062	FL HOLDER	
44	XTB3+10J	SCREW	
45	XTB3+10JFZ	SCREW	
46	XTB3+20J	SCREW	
47	XTBS26+10J	SCREW	
48	XTBS3+8JFZ1	SCREW	
49	XTW3+12T	SCREW	
50	XTW3+15T	SCREW	
51	RMR1093-W	P-BASE SUPPORT	
52	REM0072-4	FAN	

20.4 Electrical Parts List

NOTA: Los componentes con el símbolo ⚠ son partes importanes de seguridad.

Ref	Part	Description	Mark
		P.C.B. WITH COMPONENTS	
	RAIM025000A	TRANSFORMER	
	RAIM025001A	POWER	
	RAIM025002A	MAIN	
	RAIM025003A	PANEL	
	RAIM025004A	DECK	
		P.C.B. WITHOUT COMPONENTS	
	RJBX0257C-1	TRANSFORMER	
	RJBX0256A-2	POWER	
	RJBX0254B-1	MAIN	
	RJBX0282A	PANEL	
	RJBX0266A-1	DECK	
		INTEGRATED CIRCUITS	
IC101	LA1833NMNTLM	IC IF	
IC102	LC72131MDTRM	IC	
IC300	C1BB00000654	NASP IC	
IC302	C0AABB000117	CIRCUITO INTEGRADO	
IC500	RSN35H2-P	IC	⚠
IC501	RSN35H2-P	IC	⚠
IC600	C2BBGF000325	IC MICRO-P	
IC603	BR93LC46FE2	IC	
IC800	C2BBGF000323	IC MICRO-P	
IC801	TC74HC4050EL	5V-3V LEVEL SHIFT IC	
IC802	TC74HC157AFT	IC	
IC803	BA033T	3.3V REC IC	⚠
IC804	SI8050JLF118	SWITCHING REGULAR IC	⚠
IC951	0N2180RLC1	IC PHOTO INTERRUPTER	
IC971	0N2180RLC1	IC PHOTO INTERRUPTER	
IC1001	AN7348STA-E1	IC MP3 MICRO-P	
IC1002	BU2090AF-E2	IC 64K X 16 SRAM	
IC1004	BA7755A	IC R/P SELECT	
		TRANSISTORS	
Q1	2SK544F-AC	TRANSISTOR	
Q4	2SC2787FL1TA	TRANSISTOR	
Q2	2SC2786MTA	TRANSISTOR	
Q3	2SC2787FL1TA	TRANSISTOR	
Q101	2SC2058SPTA	TRANSISTOR	
Q106	KRA102MTA	TRANSISTOR	⚠
Q201	KTC3875GRTA	TRANSISTOR	
Q202	KTC3875GRTA	TRANSISTOR	
Q203	KTD1304TA	TRANSISTOR	
Q204	KTC3875GRTA	TRANSISTOR	
Q205	KTC3875GRTA	TRANSISTOR	
Q207	KTD1304TA	TRANSISTOR	
Q301	KRC102STA	TRANSISTOR	
Q302	KTA12710YTA	TRANSISTOR	
Q303	KRC101STA	TRANSISTOR	
Q304	KRC101STA	TRANSISTOR	
Q305	KRC101STA	TRANSISTOR	
Q306	KRC101STA	TRANSISTOR	
Q307	KRA102STA	TRANSISTOR	
Q310	KRC102STA	TRANSISTOR	
Q311	2SC2712GRT5T	TRANSISTOR	
Q312	2SC2712GRT5T	TRANSISTOR	
Q314	2SC2712GRT5T	TRANSISTOR	
Q315	KRC101STA	TRANSISTOR	
Q316	KRC102STA	TRANSISTOR	
Q317	KRC101STA	TRANSISTOR	

Ref	Part	Description	Mark
Q318	KRA111STA	TRANSISTOR	
Q319	KTA12710YTA	TRANSISTOR	
Q320	B1AAKD000009	TRANSISTOR	⚠
Q370	2SA1037AKSTX	TRANSISTOR	
Q371	2SD592AQRSTA	TRANSISTOR	⚠
Q372	2SA1037AKSTX	TRANSISTOR	
Q373	2SD592AQRSTA	TRANSISTOR	
Q374	2SA1037AKSTX	TRANSISTOR	
Q375	2SC2412KT96R	TRANSISTOR	
Q401	KTC3875GRTA	TRANSISTOR	
Q402	KTC3875GRTA	TRANSISTOR	
Q403	KTD1304TA	TRANSISTOR	
Q404	KTC3875GRTA	TRANSISTOR	
Q405	KTC3875GRTA	TRANSISTOR	
Q407	KTD1304TA	TRANSISTOR	
Q500	KTC2026	TRANSISTOR	⚠
Q501	KTA1046	TRANSISTOR	⚠
Q502	KTC2026	TRANSISTOR	⚠
Q503	KTA1046	TRANSISTOR	
Q504	KRA110MTA	TRANSISTOR	
Q505	KTC3199GRTA	TRANSISTOR	⚠
Q506	B1AAKD000009	TRANSISTOR	⚠
Q507	KRA110MTA	TRANSISTOR	
Q508	KTA12710YTA	TRANSISTOR	
Q509	KTC3199GRTA	TRANSISTOR	⚠
Q510	KTC3199GRTA	TRANSISTOR	
Q511	KTC3199GRTA	TRANSISTOR	
Q512	2SD2144STA	TRANSISTOR	
Q513	KTA1267GRTA	TRANSISTOR	
Q600	KRC103MTA	TRANSISTOR	
Q601	KRC102MTA	TRANSISTOR	
Q602	KTA1267GRTA	TRANSISTOR	
Q603	KTC3199GRTA	TRANSISTOR	
Q604	KTC3199GRTA	TRANSISTOR	
Q605	KRC102MTA	TRANSISTOR	
Q608	KTC3199GRTA	TRANSISTOR	
Q609	KTC3199GRTA	TRANSISTOR	
Q610	KTC3199GRTA	TRANSISTOR	
Q611	KTC3199GRTA	TRANSISTOR	
Q612	KTC3199GRTA	TRANSISTOR	⚠
Q613	KRC102MTA	TRANSISTOR	
Q614	KTC3199GRTA	TRANSISTOR	
Q615	KTA1267GRTA	TRANSISTOR	⚠
Q616	KTC3199GRTA	TRANSISTOR	
Q950	KTC3205YTA	TRANSISTOR	⚠
Q951	2SB621ARSTA	TRANSISTOR	⚠
Q953	2SD2144STA	TRANSISTOR	
Q1001	KTC3199GRTA	TRANSISTOR	
Q1003	2SD2144STA	TRANSISTOR	
Q1004	2SD2144STA	TRANSISTOR	
Q1005	2SD2144STA	TRANSISTOR	
Q1006	KRC114STA	TRANSISTOR	
Q1007	KTC3875GRTA	TRANSISTOR	
Q1008	KTC3875GRTA	TRANSISTOR	
Q1009	KTC3875GRTA	TRANSISTOR	
Q1010	KTC3875GRTA	TRANSISTOR	
Q1011	KTC3875GRTA	TRANSISTOR	
Q1012	KTD1304TA	TRANSISTOR	
Q1013	KTD1304TA	TRANSISTOR	
Q1014	2SC2412KT96R	TRANSISTOR	
Q1015	2SC2412KT96R	TRANSISTOR	
Q1016	KRA102STA	TRANSISTOR	
Q1017	KTD1146YTA	TRANSISTOR	
Q1018	KTA12710YTA	TRANSISTOR	
Q1019	KTA12710YTA	TRANSISTOR	

Ref	Part	Description	Mark
Q1020	KTD1304TA	TRANSISTOR	
Q1021	KTD1304TA	TRANSISTOR	
Q1022	KRA102STA	TRANSISTOR	
Q1023	KRA102STA	TRANSISTOR	
	DIODES		
D1	SVC211SPA-AL	DIODE	
D2	SVC211SPA-AL	DIODE	
D3	SVC211SPA-AL	DIODE	
D101	UDZSTE175R1B	DIODE	
D202	MA728TX	DIODE	
D204	DA204KT146	DIODE	
D205	MA728TX	DIODE	
D301	1SS355TE17	DIODE	
D302	DAP202KT146	DIODE	
D303	DAP202KT146	DIODE	
D304	DAP202KT146	DIODE	
D308	RL1N4003N02	DIODE	
D311	UDZSTE175R1B	DIODE	
D312	RL1N4003N02	DIODE	
D317	UDZSTE177R5B	DIODE	
D370	1SS355TE17	DIODE	
D371	UDZSTE1710B	DIODE	
D374	RL1N4003N02	DIODE	
D375	1SS355TE17	DIODE	
D376	1SS355TE17	DIODE	
D377	1SS355TE17	DIODE	
D402	MA728TX	DIODE	
D404	DA204KT146	DIODE	
D405	MA728TX	DIODE	
D500	MTZJ15CTA	DIODE	
D502	MTZJ10BTA	DIODE	
D503	MTZJ10BTA	DIODE	
D504	RVD1SS133TA	DIODE	
D505	RVD1SS133TA	DIODE	
D506	RVD1SS133TA	DIODE	
D507	MTZJ5R6BTA	DIODE	
D508	MTZJ16BTA	DIODE	
D509	RL1N4003N02	DIODE	
D510	RL1N4003N02	DIODE	
D511	RL1N4003N02	DIODE	
D512	RVD1SS133TA	DIODE	
D513	RL1N4003N02	DIODE	
D604	RVD1SS133TA	DIODE	
D611	1SS380TE-17	DIODE	
D612	1SS380TE-17	DIODE	
D616	MTZJ5R6BTA	DIODE	
D617	RVD1SS133TA	DIODE	
D618	RVD1SS133TA	DIODE	
D619	MA723TA	DIODE	
D620	SLI325URCT31	DIODE	
D621	MA723TA	DIODE	
D622	LNJ301MPUJAD	DIODE	
D623	LNJ301MPUJAD	DIODE	
D624	LNJ301MPUJAD	DIODE	
D625	RVD1SS133TA	DIODE	
D626	RVD1SS133TA	DIODE	
D801	1SS355TE17	DIODE	
D802	1SS355TE17	DIODE	
D803	RL1N4003N02	DIODE	
D804	EK14LFH2K	DIODE	
D902	SLR325YCT31	DIODE	
D903	SLR325YCT31	DIODE	
D904	LNJ301MPUJAD	DIODE	
D905	LNJ301MPUJAD	DIODE	
D950	1D3E	DIODE	
D951	MA165TA	DIODE CTO MEC	
D951	1D3E	DIODE CTO POWER	

Ref	Part	Description	Mark
D952	MTZJ6R8BTA	DIODE	
D953	1D3E	DIODE	
D954	1D3E	DIODE	
D955	RL1N4003N02	DIODE	
D956	RL1N4003N02	DIODE	
D957	MTZJ33BTA	DIODE	
D958	RL1N4003N02	DIODE	
D959	KBP152G4R5	DIODE	⚠
D960	KBU803-001	DIODE	⚠
D971	MA165TA	DIODE	
D1003	B0ACCK000005	DIODE	
D1004	UDZTE173R6B	DIODE	
	VARIABLE TRANSISTORS		
VR600	EVEKE2F3024B	VOLUMEN JOG	
	SWITCHES		
S600	EVQ21405R	SW, TUNER	
S601	EVQ21405R	SW, TUNER	
S602	EVQ21405R	SW, TUNER	
S603	EVQ21405R	SW, TUNER	
S604	EVQ21405R	SW, TUNER	
S605	EVQ21405R	SW, TUNER	
S606	EVQ21405R	SW, TUNER	
S607	EVQ21405R	SW, TUNER	
S910	EVQ21405R	SW, TUNER	
S911	EVQ21405R	SW, TUNER	
S912	EVQ21405R	SW, TUNER	
S913	EVQ21405R	SW, TUNER	
S914	EVQ21405R	SW, TUNER	
S920	EVQ21405R	SW, TUNER	
S921	EVQ21405R	SW, TUNER	
S922	EVQ21405R	SW, TUNER	
S923	EVQ21405R	SW, TUNER	
S924	EVQ21405R	SW, TUNER	
S925	EVQ21405R	SW, TUNER	
S926	EVQ21405R	SW, TUNER	
S928	EVQ21405R	SW, TUNER	
S951	RSH1A018-3U	SW MODE	
S952	RSH1A019-2U	SW LEAF	
S953	RSH1A019-2U	SW LEAF	
S971	RSH1A018-3U	SW LEAF	
S972	RSH1A019-2U	SW LEAF	
S973	RSH1A019-2U	SW LEAF	
S974	RSH1A019-2U	SW LEAF	
S975	RSH1A019-2U	SW LEAF	
	CONNECTORS		
CN300	RJU057G12	CONECTOR P2 MQ 12P	
CN301	RJU057G12	CONECTOR P2 MQ 12P	
CN302	K1MN30A00045	CONECTOR 30P	
CN303	RJS1A9417-1	CONECTOR FFC 17P	
CN304	RJS1A5210	10P WIRE HOLDER	
CN305	RJP2G4YA	CONECTOR	
CN309	RJS1A9414-1	CONECTOR FFC 14P	
CN310	K1MN30A00045	CONECTOR 30P	
CN311	K1KA20A00108	20P CONNECTOR	
CN500	RJT057G12	CONECTOR P2 MQ 12P	
CN501	RJT057G12	CONECTOR P2 MQ 12P	
CN900	RJT066H08D	8 PIN B-B- CONNECTOR	
CN951	RJP13G4YA	CONECTOR 13 PIN	
CN952	RJP7G18ZA	CONECTOR	
CN953	RJP7G4YA	7P PLUG IN CONNECTOR	
CN1001	K1MP08B00001	CONECTOR 8P	

Ref	Part	Description	Mark
CP600	K1MN30A00046	CONECTOR 30P	
CP601	RJS1A9417-1	CONECTOR FFC 17P	
CP603	BR93LC46FE2	IC CONNECTOR	
CP900	RJU066H08	8 PIN B-B- SOCKET	
CP1001	RJT071K09A	9P B/B CONNECTOR	
CP1002	RJT071K09A	9P B/B CONNECTOR	
CS951	RJU071H09M1	CONECTOR	
CS971	RJU071H09M1	CONECTOR	
CS1001	RJS1A6805-J	CONECTOR 5P	
CS1002	RJS1A6805-J	CONECTOR 5P	
		COILS	
L1	RLQZP1R2KT-Y	COIL	
L2	RLQZPR47KT-Y	COIL	
L102	RLQB1R0KTD-D	INDUCTOR	
L600	RLQB3R3KT-1Y	COIL	
L602	RLQB101KT-1Y	COIL	
L606	RLQZP101KT-Y	AXIAL COIL	
L607	RLQZP101KT-Y	AXIAL COIL	
L608	RLQZP100KT-Y	AXIAL COIL	
L801	RLL500050T-Y	RF CHOKE COIL	
L802	RLL500050T-Y	RF CHOKE COIL	
L803	RLL500050T-Y	RF CHOKE COIL	
L804	RLQX101M-T	COIL	
L805	RLL500050T-Y	RF CHOKE COIL	
L1001	RLQB470JTD-D	RF CHOKE COIL	
L1002	7L1A62N	BIAS OSC COIL	
		TRANSFORMERS	
T950	RTPM1N3M021-V	MAIN TRANSFORMER	⚠
T951	G4C2AAJ00001	BACK UP TRANSFORMER	⚠
		COMPONENT COMBINATION	
Z101	RLA2Z007-T	COIL	
Z102	RLI2Z021M-T	AM IF BLOCK	
Z600	RCD37142TC5	SENSOR DE C.R.	
Z950	ERZV10V511CS	ZENNER	
Z971	RGSD12A1445T	RADA RESISTOR	
Z1002	RGSD12A1445T	RADA RESISTOR	
		CERAMIC FILTERS	
CF201	RLFFETWND01M	FM CF	
CF202	RLFFETWND01M	FM CF	
		RELAY	
RL950	RSY0040M-0	PRIMARY RELAY	⚠
		OSCILLATORS	
X102	RLFDFT22DD	DISCRIMINATOR	
X103	RSXC7M20S05T	CRYSTAL OSCILLATOR	
X600	RSXY6M00M05T	CERAMIC OSC. MAIN	
X600	RSXD32K7S02	CRYSTAL OSC. PANEL	
X601	RSXZ4M19B01T	CERAMIC OSCILLATOR	
		DISPLAY TUBE	
FL600	A2BD00000053	FL DISPLAY	
		FUSES	
F1	K5D402AQ0002	PRIMARY FUSE 4A	⚠

Ref	Part	Description	Mark
		FUSE HOLDERS	
FC1	EYF52BC	FUSIBLE TERMINAL	
FC2	EYF52BC	FUSIBLE TERMINAL	
		FUSE PROTECTORS	
FP950	K5G402A0018	FUSE PROTECTOR AXIAL	⚠
FP951	K5G102AA0005	FUSE PROTECTOR AXIAL	⚠
		HOLDERS	
H500	K1YF07000003	7P WIRE HOLDER	
H501A	RJS1A5505	5P WIRE HOLDER	
H501B	RJS1A5505	5P WIRE HOLDER	
H502A	RJS1A5505	5P WIRE HOLDER	
H502B	RJS1A5505	5P WIRE HOLDER	
H600	RMR0316	7P CABLE HOLDER	
H601	RMR0317	8P WIRE HOLDER	
H950	K1YF13000001	13P WIRE HOLDER	
H1001	RMR0319	10P CABLE HOLDER	
		JACKS	
JK101	RJH5414-1	JK ANTENNA	
JK305	RJH2213L-1	JK 2P RCA	
JK601	RJJ37TK07-X	JK HP/MIC	
JK950	K2AB2B000002	JK AC INTLET	⚠
JK951	RJR0054P-J	JK 4 TERMINAL SPK	
JK952	RJR0054N-J	JK 4 TERMINAL SPK	
		EARTH TERMINAL	
E500	SNE1004-2	EARTH TERMINAL	
E950	SNE1004-2	EARTH TERMINAL	
		WIRES	
W500	REXX0275-2	7P FLAT WIRE	
W501A/B	RWJ1805155XX	5P FLAT WIRE	
W502A/B	RWJ1805175XX	5P FLAT WIRE	
W600	REXX0273	7P FLAT WIRE	
W601	RWJ0208150RX	8P PANEL TO DECK	
W950	REXX0274	13P FLAT WIRE	
W1001	RWJ6510110XX	10P WIRE	
W1002	RWJ0102050CK	MAIN-MECHA MOTOR W	
		RESISTORS	
R1	ERDS2TJ104T	RESISTOR	
R2	ERDS2TJ104T	RESISTOR	
R3	ERDS2TJ221T	RESISTOR	
R4	ERDS2TJ104T	RESISTOR	
R5	ERDS2TJ564T	RESISTOR	
R6	ERDS2TJ391T	RESISTOR	
R7	ERDS2TJ272T	RESISTOR	
R8	ERDS2TJ684T	RESISTOR	
R9	ERDS2TJ391T	RESISTOR	
R10	ERDS2TJ391T	RESISTOR	
R11	ERDS2TJ684T	RESISTOR	
R101	ERJ3GEY0R00V	RESISTOR	
R102	ERJ3GEYJ472V	RESISTOR	
R103	ERJ3GEYJ271V	RESISTOR	
R104	ERJ3GEYJ102V	RESISTOR	
R105	ERJ3GEYJ471V	RESISTOR	
R106	ERJ3GEYJ474V	RESISTOR	
R107	ERJ3GEYJ331V	RESISTOR	
R110	ERJ3GEYJ102V	RESISTOR	
R111	ERJ3GEYJ391V	RESISTOR	

Ref	Part	Description	Mark
R112	ERJ3GEYJ104V	RESISTOR	
R113	ERJ3GEYJ103V	RESISTOR	
R114	ERJ3GEYJ562V	RESISTOR	
R115	ERJ3GEYJ561V	RESISTOR	
R116	ERJ3GEYJ102V	RESISTOR	
R117	ERJ3GEYJ473V	RESISTOR	
R118	ERJ3GEYJ332V	RESISTOR	
R119	ERJ3GEYJ332V	RESISTOR	
R120	ERJ3GEYJ473V	RESISTOR	
R121	ERJ3GEYJ223V	RESISTOR	
R122	ERJ3GEYJ272V	RESISTOR	
R123	ERJ3GEYJ683V	RESISTOR	
R124	ERJ3GEYJ330V	RESISTOR	
R125	ERJ3GEYJ471V	RESISTOR	
R126	ERJ3GEYJ102V	RESISTOR	
R127	ERJ3GEYJ471V	RESISTOR	
R128	ERJ3GEYJ820V	RESISTOR	
R129	ERJ3GEYJ273V	RESISTOR	
R130	ERJ3GEYJ103V	RESISTOR	
R131	ERJ3GEYJ121V	RESISTOR	
R132	ERJ3GEYJ103V	RESISTOR	
R133	ERJ3GEYJ102V	RESISTOR	
R134	ERJ3GEYJ471V	RESISTOR	
R135	ERJ3GEYJ102V	RESISTOR	
R136	ERJ3GEYJ102V	RESISTOR	
R137	ERJ3GEYJ102V	RESISTOR	
R138	ERJ3GEYJ332V	RESISTOR	
R141	ERJ3GEYJ682V	RESISTOR	
R142	ERJ3GEYJ682V	RESISTOR	
R143	ERJ3GEYJ223V	RESISTOR	
R144	ERJ3GEYJ121V	RESISTOR	
R145	ERJ3GEYJ104V	RESISTOR	
R146	ERJ3GEYJ104V	RESISTOR	
R151	ERJ3GEYJ820V	RESISTOR	
R152	ERJ3GEY0R00V	RESISTOR	
R201	ERJ3GEYJ103V	RESISTOR	
R202	ERJ3GEYJ332V	RESISTOR	
R203	ERJ3GEYJ102V	RESISTOR	
R204	ERJ3GEYJ473V	RESISTOR	
R205	ERJ3GEYJ102V	RESISTOR	
R206	ERJ3GEYJ473V	RESISTOR	
R207	ERJ3GEYJ182V	RESISTOR	
R208	ERJ3GEYJ154V	RESISTOR	
R209	ERJ3GEYJ104V	RESISTOR	
R210	ERJ3GEYJ822V	RESISTOR	
R211	ERJ3GEYJ101V	RESISTOR	
R212	ERJ3GEYJ334V	RESISTOR	
R213	ERJ3GEYJ823V	RESISTOR	
R214	ERJ3GEYJ222V	RESISTOR	
R215	ERJ3GEYJ101V	RESISTOR	
R216	ERJ3GEYJ102V	RESISTOR	
R217	ERJ3GEYJ104V	RESISTOR	
R218	ERJ3GEYJ102V	RESISTOR	
R219	ERJ3GEYJ821V	RESISTOR	
R220	ERJ3GEYJ222V	RESISTOR	
R221	ERJ3GEYJ102V	RESISTOR	
R222	ERJ3GEYJ472V	RESISTOR	
R223	ERJ3GEYJ473V	RESISTOR	
R224	ERJ3GEYJ302V	RESISTOR	
R225	ERJ3GEYJ563V	RESISTOR	
R226	ERJ3GEYJ222V	RESISTOR	
R227	ERJ3GEYJ472V	RESISTOR	
R228	ERJ3GEYJ104V	RESISTOR	
R229	ERJ3GEYJ102V	RESISTOR	
R230	ERJ3GEYJ123V	RESISTOR	
R231	ERJ3GEYJ222V	RESISTOR	
R232	ERJ3GEYJ104V	RESISTOR	
R233	ERJ3GEYJ152V	RESISTOR	
R234	ERJ3GEYJ470V	RESISTOR	

Ref	Part	Description	Mark
R235	ERJ3GEYJ470V	RESISTOR	
R236	ERJ3GEYJ470V	RESISTOR	
R237	ERJ3GEYJ470V	RESISTOR	
R238	ERJ3GEYJ472V	RESISTOR	
R240	ERJ3GEYJ123V	RESISTOR	
R241	ERJ3GEYJ103V	RESISTOR	
R242	ERJ3GEYJ153V	RESISTOR	
R243	ERJ3GEYJ153V	RESISTOR	
R245	ERJ3GEYJ103V	RESISTOR	
R246	ERJ3GEY0R00V	RESISTOR	
R247	ERJ3GEYJ221V	RESISTOR	
R248	ERJ3GEYJ224V	RESISTOR	
R249	ERJ3GEYJ102V	RESISTOR	
R250	ERJ3GEYJ332V	RESISTOR	
R252	ERJ3GEYJ224V	RESISTOR	
R253	ERJ3GEY0R00V	RESISTOR	
R261	ERJ3GEYJ333V	RESISTOR	
R262	ERJ3GEYJ331V	RESISTOR	
R263	ERJ3GEY0R00V	RESISTOR	
R266	ERJ3GEYJ681V	RESISTOR	
R270	ERJ3GEYJ393V	RESISTOR	
R271	ERJ3GEYJ153V	RESISTOR	
R302	ERJ3GEYJ472V	RESISTOR	
R303	ERJ3GEYJ103V	RESISTOR	
R304	ERJ3GEYJ222V	RESISTOR	
R305	ERJ3GEYJ222V	RESISTOR	
R312	ERJ3GEYJ221V	RESISTOR	
R313	ERJ3GEY0R00V	RESISTOR	
R314	ERJ3GEY0R00V	RESISTOR	
R315	ERJ3GEY0R00V	RESISTOR	
R316	ERJ3GEYJ103V	RESISTOR	
R317	ERJ3GEYJ102V	RESISTOR	
R318	ERJ3GEYJ101V	RESISTOR	
R319	ERJ3GEYJ101V	RESISTOR	
R320	ERJ3GEYJ101V	RESISTOR	
R321	ERJ3GEYJ101V	RESISTOR	
R322	ERJ3GEYJ101V	RESISTOR	
R323	ERJ3GEY0R00V	RESISTOR	
R324	ERJ3GEYJ102V	RESISTOR	
R325	ERJ3GEYJ182V	RESISTOR	
R326	ERJ3GEYJ182V	RESISTOR	
R327	ERJ3GEYJ101V	RESISTOR	
R328	ERJ3GEYJ182V	RESISTOR	
R329	ERJ3GEYJ101V	RESISTOR	
R330	ERJ3GEY0R00V	RESISTOR	
R331	ERJ3GEY0R00V	RESISTOR	
R332	ERJ3GEYJ101V	RESISTOR	
R333	ERJ3GEYJ101V	RESISTOR	
R334	ERJ3GEYJ102V	RESISTOR	
R335	ERJ3GEYJ102V	RESISTOR	
R336	ERJ3GEY0R00V	RESISTOR	
R337	ERJ3GEYJ273V	RESISTOR	
R338	ERJ3GEY0R00V	RESISTOR	
R339	ERJ3GEYJ563V	RESISTOR	
R340	ERJ3GEYJ221V	RESISTOR	
R341	ERJ3GEYJ391V	RESISTOR	
R342	ERJ3GEYJ391V	RESISTOR	
R343	ERJ3GEY0R00V	RESISTOR	
R344	ERJ3GEY0R00V	RESISTOR	
R345	ERJ3GEY0R00V	RESISTOR	
R370	ERJ3GEYJ104V	RESISTOR	
R371	ERJ3GEYJ472V	RESISTOR	
R372	ERJ3GEYJ472V	RESISTOR	
R373	ERJ3GEYJ332V	RESISTOR	
R374	ERJ3GEYJ104V	RESISTOR	
R375	ERJ3GEYJ103V	RESISTOR	
R376	ERDS1FVJ220T	RESISTOR	
R377	ERJ3GEYJ224V	RESISTOR	
R378	ERJ3GEYJ101V	RESISTOR	

Ref	Part	Description	Mark
R379	ERJ3GEYJ104V	RESISTOR	
R381	ERJ3GEYJ225V	RESISTOR	
R382	ERDS1FVJ330T	RESISTOR	
R384	ERJ3GEY0R00V	RESISTOR	
R385	ERDS1FVJ270T	RESISTOR	
R386	ERJ3GEY0R00V	RESISTOR	
R387	ERJ3GEY0R00V	RESISTOR	
R389	ERJ3GEY0R00V	RESISTOR	
R390	ERJ3GEY0R00V	RESISTOR	
R391	ERJ3GEY0R00V	RESISTOR	
R392	ERJ3GEY0R00V	RESISTOR	
R393	ERJ3GEY0R00V	RESISTOR	
R394	ERJ3GEY0R00V	RESISTOR	
R395	ERJ3GEY0R00V	RESISTOR	
R396	ERJ3GEY0R00V	RESISTOR	
R397	ERJ3GEY0R00V	RESISTOR	
R398	ERJ3GEYJ103V	RESISTOR	
R399	ERJ3GEYJ103V	RESISTOR	
R401	ERJ3GEYJ103V	RESISTOR	
R402	ERJ3GEYJ332V	RESISTOR	
R403	ERJ3GEYJ102V	RESISTOR	
R404	ERJ3GEYJ473V	RESISTOR	
R405	ERJ3GEYJ102V	RESISTOR	
R406	ERJ3GEYJ473V	RESISTOR	
R407	ERJ3GEYJ182V	RESISTOR	
R408	ERJ3GEYJ154V	RESISTOR	
R409	ERJ3GEYJ104V	RESISTOR	
R410	ERJ3GEYJ822V	RESISTOR	
R411	ERJ3GEYJ101V	RESISTOR	
R412	ERJ3GEYJ334V	RESISTOR	
R413	ERJ3GEYJ823V	RESISTOR	
R414	ERJ3GEYJ222V	RESISTOR	
R415	ERJ3GEYJ101V	RESISTOR	
R416	ERJ3GEYJ102V	RESISTOR	
R417	ERJ3GEYJ104V	RESISTOR	
R418	ERJ3GEYJ102V	RESISTOR	
R419	ERJ3GEYJ821V	RESISTOR	
R420	ERJ3GEYJ392V	RESISTOR	
R421	ERJ3GEYJ392V	RESISTOR	
R422	ERJ3GEYJ472V	RESISTOR	
R423	ERJ3GEYJ473V	RESISTOR	
R424	ERJ3GEYJ302V	RESISTOR	
R425	ERJ3GEYJ563V	RESISTOR	
R426	ERJ3GEYJ222V	RESISTOR	
R427	ERJ3GEYJ472V	RESISTOR	
R428	ERJ3GEYJ104V	RESISTOR	
R429	ERJ3GEYJ102V	RESISTOR	
R430	ERJ3GEYJ123V	RESISTOR	
R431	ERJ3GEYJ222V	RESISTOR	
R432	ERJ3GEYJ104V	RESISTOR	
R433	ERJ3GEYJ152V	RESISTOR	
R434	ERJ3GEYJ470V	RESISTOR	
R435	ERJ3GEYJ470V	RESISTOR	
R436	ERJ3GEYJ470V	RESISTOR	
R437	ERJ3GEYJ470V	RESISTOR	
R438	ERJ3GEYJ472V	RESISTOR	
R440	ERJ3GEYJ123V	RESISTOR	
R441	ERJ3GEYJ103V	RESISTOR	
R442	ERJ3GEYJ153V	RESISTOR	
R443	ERJ3GEYJ153V	RESISTOR	
R445	ERJ3GEYJ103V	RESISTOR	
R446	ERJ3GEY0R00V	RESISTOR	
R447	ERJ3GEYJ221V	RESISTOR	
R448	ERJ3GEYJ224V	RESISTOR	
R449	ERJ3GEYJ102V	RESISTOR	
R450	ERJ3GEYJ332V	RESISTOR	
R452	ERJ3GEYJ224V	RESISTOR	
R453	ERJ3GEY0R00V	RESISTOR	
R458	ERJ3GEY0R00V	RESISTOR	

Ref	Part	Description	Mark
R461	ERJ3GEYJ333V	RESISTOR	
R462	ERJ3GEYJ331V	RESISTOR	
R463	ERJ3GEY0R00V	RESISTOR	
R466	ERJ3GEYJ681V	RESISTOR	
R470	ERJ3GEYJ393V	RESISTOR	
R471	ERJ3GEYJ153V	RESISTOR	
R500	ERDS2TJ153T	RESISTOR	
R501	ERDS2TJ153T	RESISTOR	
R502	ERDS2TJ153T	RESISTOR	
R503	ERDS2TJ153T	RESISTOR	
R504	ERDS2TJ562T	RESISTOR	
R505	ERDS2TJ562T	RESISTOR	
R506	ERDS2TJ562T	RESISTOR	
R507	ERDS2TJ562T	RESISTOR	
R508	ERDS2TJ683T	RESISTOR	
R509	ERDS2TJ683T	RESISTOR	
R510	ERDS2TJ562T	RESISTOR	
R511	ERDS2TJ224T	RESISTOR	
R512	ERDS2TJ562T	RESISTOR	
R514	ERDS2TJ334T	RESISTOR	
R515	ERDS2TJ683T	RESISTOR	
R516	ERDS2TJ154T	RESISTOR	
R517	ERDS2TJ124T	RESISTOR	
R518	ERDS2TJ184T	RESISTOR	
R519	ERDS2TJ124T	RESISTOR	
R521	ERDS2TJ683T	RESISTOR	
R522	ERDS2TJ562T	RESISTOR	
R523	ERDS2TJ683T	RESISTOR	
R524	ERDS2TJ683T	RESISTOR	
R525	ERDS2TJ562T	RESISTOR	
R526	ERDS2TJ334T	RESISTOR	
R527	ERDS2TJ683T	RESISTOR	
R528	ERDS2TJ683T	RESISTOR	
R529	ERDS2TJ103T	RESISTOR	
R530	ERDS2TJ103T	RESISTOR	
R531	ERDS2TJ682T	RESISTOR	
R532	ERDS2TJ223T	RESISTOR	
R533	ERDS2TJ104T	RESISTOR	
R534	ERDS2TJ223T	RESISTOR	
R535	ERDS2TJ223T	RESISTOR	
R536	ERDS2TJ103T	RESISTOR	
R537	ERDS1FVJ2R7T	RESISTOR	
R538	ERDS1FVJ2R7T	RESISTOR	
R539	ERDS1FVJ2R7T	RESISTOR	
R540	ERDS1FVJ2R7T	RESISTOR	
R541	ERDS1FVJ2R7T	RESISTOR	
R542	ERDS2TJ472T	RESISTOR	
R543	ERDS2TJ2R2T	RESISTOR	
R544	ERDS2TJ332T	RESISTOR	
R545	ERDS2TJ222T	RESISTOR	
R546	ERDS2TJ151T	RESISTOR	
R547	ERDS1FVJ270T	RESISTOR	
R548	ERDS1FVJ150T	RESISTOR	
R549	ERD2FCVG120T	RESISTOR	
R550	ERDS1FVJ150T	RESISTOR	
R552	ERDS2TJ332T	RESISTOR	
R553	ERDS2TJ101T	RESISTOR	
R554	ERDS2TJ222T	RESISTOR	
R555	ERDS2TJ392T	RESISTOR	
R556	ERDS2TJ103T	RESISTOR	
R557	ERDS2TJ331T	RESISTOR	
R558	ERDS2TJ2R2T	RESISTOR	
R559	ERDS2TJ2R2T	RESISTOR	
R560	ERDS2TJ2R2T	RESISTOR	
R561	ERDS2TJ122T	RESISTOR	
R562	ERDS2TJ103T	RESISTOR	
R563	ERDS2TJ331T	RESISTOR	
R564	ERDS1FVJ331T	RESISTOR	
R565	ERDS1FVJ331T	RESISTOR	

Ref	Part	Description	Mark
R566	ERDS1FVJ331T	RESISTOR	
R579	ERDS2TJ473T	RESISTOR	
R580	ERDS2TJ473T	RESISTOR	
R581	ERDS2TJ272T	RESISTOR	
R582	ERDS2TJ561T	RESISTOR	
R583	ERDS2TJ272T	RESISTOR	
R584	ERDS2TJ103T	RESISTOR	
R586	ERDS2TJ331T	RESISTOR	
R601	ERDS2TJ681T	RESISTOR	
R602	ERDS2TJ106T	RESISTOR	
R603	ERDS2TJ334T	RESISTOR	
R604	ERDS2TJ472T	RESISTOR	
R605	ERDS2TJ472T	RESISTOR	
R606	ERDS2TJ103T	RESISTOR	
R607	ERDS2TJ223T	RESISTOR	
R608	ERDS2TJ471T	RESISTOR	
R609	ERDS2TJ104T	RESISTOR	
R610	ERDS2TJ473T	RESISTOR	
R611	ERDS2TJ102T	RESISTOR	
R612	ERDS2TJ474T	RESISTOR	
R613	ERDS2TJ472T	RESISTOR	
R614	ERDS2TJ680T	RESISTOR	
R615	ERDS2TJ680T	RESISTOR	
R616	ERDS2TJ104T	RESISTOR	
R617	ERDS2TJ104T	RESISTOR	
R618	ERDS2TJ104T	RESISTOR	
R619	ERDS2TJ104T	RESISTOR	
R620	ERDS2TJ104T	RESISTOR	
R621	ERDS2TJ104T	RESISTOR	
R622	ERDS2TJ104T	RESISTOR	
R623	ERDS2TJ104T	RESISTOR	
R624	ERDS2TJ104T	RESISTOR	
R625	ERDS2TJ104T	RESISTOR	
R626	ERDS2TJ104T	RESISTOR	
R627	ERDS2TJ104T	RESISTOR	
R628	ERDS2TJ102T	RESISTOR	
R629	ERDS2TJ102T	RESISTOR	
R630	ERDS2TJ101T	RESISTOR	
R631	ERDS2TJ562T	RESISTOR	
R632	ERDS2TJ101T	RESISTOR	
R633	ERDS2TJ101T	RESISTOR	
R634	ERDS2TJ473T	RESISTOR	
R635	ERDS2TJ104T	RESISTOR	
R636	ERDS2TJ101T	RESISTOR	
R637	ERDS2TJ392T	RESISTOR	
R638	ERDS2TJ103T	RESISTOR	
R639	ERDS2TJ681T	RESISTOR	
R640	ERDS2TJ102T	RESISTOR	
R641	ERDS2TJ223T	RESISTOR	
R642	ERDS2TJ101T	RESISTOR	
R643	ERDS2TJ101T	RESISTOR	
R644	ERDS2TJ101T	RESISTOR	
R645	ERDS2TJ103T	RESISTOR	
R646	ERDS2TJ103T	RESISTOR	
R647	ERDS2TJ103T	RESISTOR	
R648	ERDS2TJ102T	RESISTOR	
R649	ERDS2TJ102T	RESISTOR	
R650	ERDS2TJ103T	RESISTOR	
R651	ERDS2TJ103T	RESISTOR	
R652	ERDS2TJ222T	RESISTOR	
R653	ERDS2TJ103T	RESISTOR	
R654	ERDS2TJ223T	RESISTOR	
R655	ERDS2TJ473T	RESISTOR	
R656	ERDS2TJ221T	RESISTOR	
R657	ERDS2TJ221T	RESISTOR	
R658	ERDS2TJ103T	RESISTOR	
R659	ERDS2TJ473T	RESISTOR	
R660	ERDS2TJ473T	RESISTOR	
R661	ERDS2TJ473T	RESISTOR	

Ref	Part	Description	Mark
R663	ERDS2TJ223T	RESISTOR	
R664	ERDS2TJ223T	RESISTOR	
R665	ERDS2TJ472T	RESISTOR	
R666	ERDS2TJ102T	RESISTOR	
R667	ERDS2TJ102T	RESISTOR	
R668	ERDS2TJ102T	RESISTOR	
R670	ERDS2TJ104T	RESISTOR	
R671	ERDS2TJ473T	RESISTOR	
R672	ERDS2TJ473T	RESISTOR	
R673	ERDS2TJ104T	RESISTOR	
R674	ERDS2TJ332T	RESISTOR	
R675	ERDS2TJ104T	RESISTOR	
R676	ERDS2TJ102T	RESISTOR	
R677	ERDS2TJ102T	RESISTOR	
R678	ERDS2TJ122T	RESISTOR	
R679	ERDS2TJ182T	RESISTOR	
R680	ERDS2TJ222T	RESISTOR	
R681	ERDS2TJ272T	RESISTOR	
R682	ERDS2TJ472T	RESISTOR	
R683	ERDS2TJ103T	RESISTOR	
R684	ERDS2TJ103T	RESISTOR	
R685	ERDS2TJ271T	RESISTOR	
R686	ERDS2TJ271T	RESISTOR	
R687	ERDS2TJ271T	RESISTOR	
R688	ERDS2TJ104T	RESISTOR	
R689	ERDS2TJ473T	RESISTOR	
R690	ERDS2TJ473T	RESISTOR	
R698	ERDS2TJ682T	RESISTOR	
R699	ERDS2TJ470T	RESISTOR	
R801	ERJ3GEYJ472V	RESISTOR	
R802	ERJ3GEYJ103V	RESISTOR	
R803	ERJ3GEYJ472V	RESISTOR	
R804	ERJ3GEYJ103V	RESISTOR	
R805	ERJ3GEYJ472V	RESISTOR	
R806	ERJ3GEYJ103V	RESISTOR	
R807	ERJ3GEYJ472V	RESISTOR	
R808	ERJ3GEYJ103V	RESISTOR	
R809	ERJ3GEYJ472V	RESISTOR	
R810	ERJ3GEYJ103V	RESISTOR	
R811	ERJ3GEYJ223V	RESISTOR	
R812	ERJ3GEYJ223V	RESISTOR	
R813	ERJ3GEYJ472V	RESISTOR	
R814	ERJ3GEYJ103V	RESISTOR	
R815	ERJ3GEYJ103V	RESISTOR	
R816	ERJ3GEYJ103V	RESISTOR	
R817	ERJ3GEYJ103V	RESISTOR	
R818	ERJ3GEYJ103V	RESISTOR	
R819	ERJ3GEYJ473V	RESISTOR	
R820	ERJ3GEYJ223V	RESISTOR	
R821	ERJ3GEYJ473V	RESISTOR	
R822	ERJ3GEYJ472V	RESISTOR	
R823	ERJ3GEYJ103V	RESISTOR	
R824	ERJ3GEYJ103V	RESISTOR	
R825	ERJ3GEYJ103V	RESISTOR	
R826	ERJ3GEYJ103V	RESISTOR	
R827	ERJ3GEYJ102V	RESISTOR	
R828	ERJ3GEYJ103V	RESISTOR	
R829	ERJ3GEYJ472V	RESISTOR	
R830	ERJ3GEYJ102V	RESISTOR	
R831	ERJ3GEYJ101V	RESISTOR	
R832	ERJ3GEYJ101V	RESISTOR	
R833	ERJ3GEYJ101V	RESISTOR	
R834	ERJ3GEYJ101V	RESISTOR	
R835	ERJ3GEYJ101V	RESISTOR	
R836	ERJ3GEYJ101V	RESISTOR	
R837	ERJ3GEYJ102V	RESISTOR	
R838	ERJ3GEYJ101V	RESISTOR	
R839	ERJ3GEYJ102V	RESISTOR	
R840	ERJ3GEYJ102V	RESISTOR	

Ref	Part	Description	Mark
R841	ERJ3GEYJ102V	RESISTOR	
R842	ERJ3GEYJ102V	RESISTOR	
R843	ERJ3GEYJ102V	RESISTOR	
R844	ERJ3GEYJ102V	RESISTOR	
R845	ERJ3GEYJ102V	RESISTOR	
R846	ERJ3GEYJ102V	RESISTOR	
R847	ERJ3GEYJ102V	RESISTOR	
R848	ERJ3GEYJ102V	RESISTOR	
R849	ERJ3GEYJ221V	RESISTOR	
R850	ERJ3GEYJ101V	RESISTOR	
R851	ERJ3GEYJ101V	RESISTOR	
R852	ERJ3GEYJ101V	RESISTOR	
R853	ERJ3GEYJ182V	RESISTOR	
R854	ERJ3GEYJ103V	RESISTOR	
R855	ERJ3GEYJ101V	RESISTOR	
R856	ERJ3GEYJ152V	RESISTOR	
R857	ERJ3GEYJ102V	RESISTOR	
R858	ERJ3GEYJ102V	RESISTOR	
R861	ERJ3GEYJ102V	RESISTOR	
R862	ERJ3GEYJ101V	RESISTOR	
R863	ERJ3GEYJ472V	RESISTOR	
R864	ERJ3GEYJ472V	RESISTOR	
R865	ERJ3GEYJ101V	RESISTOR	
R866	ERJ3GEYJ473V	RESISTOR	
R869	ERJ3GEYJ101V	RESISTOR	
R870	ERJ3GEYJ101V	RESISTOR	
R871	ERJ3GEYJ101V	RESISTOR	
R872	ERJ3GEYJ101V	RESISTOR	
R873	ERJ3GEYJ101V	RESISTOR	
R874	ERJ3GEYJ101V	RESISTOR	
R875	ERJ3GEYJ472V	RESISTOR	
R876	ERJ3GEYJ472V	RESISTOR	
R877	ERJ3GEYJ472V	RESISTOR	
R878	ERJ3GEYJ472V	RESISTOR	
R879	ERJ3GEYJ472V	RESISTOR	
R880	ERJ3GEYJ473V	RESISTOR	
R881	ERJ3GEYJ472V	RESISTOR	
R882	ERJ3GEYJ104V	RESISTOR	
R883	ERJ3GEYJ473V	RESISTOR	
R884	ERJ3GEYJ223V	RESISTOR	
R885	ERJ3GEYJ102V	RESISTOR	
R886	ERJ3GEYJ103V	RESISTOR	
R893	ERJ3GEYJ473V	RESISTOR	
R894	ERJ3GEYJ101V	RESISTOR	
R896	ERJ3GEYJ103V	RESISTOR	
R897	ERJ3GEYJ101V	RESISTOR	
R898	ERJ3GEYJ103V	RESISTOR	
R899	ERJ3GEYJ101V	RESISTOR	
R901	ERDS2TJ681T	RESISTOR	
R902	ERDS2TJ681T	RESISTOR	
R910	ERDS2TJ102T	RESISTOR	
R911	ERDS2TJ102T	RESISTOR	
R912	ERDS2TJ122T	RESISTOR	
R913	ERDS2TJ182T	RESISTOR	
R914	ERDS2TJ102T	RESISTOR	
R915	ERDS2TJ102T	RESISTOR	
R916	ERDS2TJ122T	RESISTOR	
R917	ERDS2TJ182T	RESISTOR	
R918	ERDS2TJ222T	RESISTOR	
R919	ERDS2TJ272T	RESISTOR	
R920	ERDS2TJ472T	RESISTOR	
R922	ERDS2TJ221T	RESISTOR	
R924	ERDS2TJ271T	RESISTOR	
R925	ERDS2TJ271T	RESISTOR	
R945	ERDS2TJ102T	RESISTOR	
R946	ERDS2TJ102T	RESISTOR	
R947	ERDS2TJ474T	RESISTOR	
R948	ERDS2TJ103T	RESISTOR	
R949	ERDS2TJ102T	RESISTOR	

Ref	Part	Description	Mark
R950	ERDS2TJ102T	RESISTOR	
R951	ERDS2TJ151T	RESISTOR	
R952	ERDS2TJ821T	RESISTOR CTO MEC	
R952	ERDS1FVJ220T	RESISTOR CTO POWER	
R953	ERDS2TJ393T	RESISTOR CTO MEC	
R953	ERDS1FVJ180T	RESISTOR CTO POWER	
R954	ERDS1FVJ120T	RESISTOR	
R958	ERD2FCVJ4R7T	RESISTOR	
R959	ERDS2TJ472T	RESISTOR	
R960	ERDS2TJ151T	RESISTOR	
R961	ERDS2TJ332T	RESISTOR	
R964	ERC12UGK335D	RESISTOR	
R972	ERDS2TJ821T	RESISTOR	
R973	ERDS2TJ393T	RESISTOR	
R982	ERDS1FVJ100T	RESISTOR	
R983	ERDS1FVJ100T	RESISTOR	
R984	ERDS1FVJ100T	RESISTOR	
R985	ERDS1FVJ100T	RESISTOR	
R1001	ERJ3GEYJ1R0V	RESISTOR	
R1003	ERJ3GEYJ103V	RESISTOR	
R1004	ERJ3GEYJ152V	RESISTOR	
R1005	ERJ3GEYJ472V	RESISTOR	
R1006	ERJ3GEYJ102V	RESISTOR	
R1007	ERD25FVJ4R7T	RESISTOR	
R1008	ERJ3GEYJ223V	RESISTOR	
R1009	ERJ3GEYJ183V	RESISTOR	
R1010	ERJ3GEYJ183V	RESISTOR	
R1011	ERJ3GEYJ103V	RESISTOR	
R1012	ERJ3GEYJ472V	RESISTOR	
R1013	ERJ3GEYJ472V	RESISTOR	
R1014	ERJ3GEYJ472V	RESISTOR	
R1015	ERJ3GEYJ470V	RESISTOR	
R1016	ERJ3GEYJ470V	RESISTOR	
R1017	ERJ3GEYJ822V	RESISTOR	
R1018	ERJ3GEYJ392V	RESISTOR	
R1019	ERJ3GEYJ392V	RESISTOR	
R1020	ERJ3GEYJ470V	RESISTOR	
R1022	ERJ3GEYJ103V	RESISTOR	
R1024	ERJ3GEYJ563V	RESISTOR	
R1026	ERJ3GEYJ102V	RESISTOR	
R1027	ERJ3GEYJ104V	RESISTOR	
R1028	ERJ3GEYJ822V	RESISTOR	
R1029	ERJ3GEYJ475V	RESISTOR	
R1030	ERJ3GEYJ101V	RESISTOR	
R1031	ERJ3GEYJ273V	RESISTOR	
R1032	ERJ3GEYJ103V	RESISTOR	
R1035	ERJ3GEYJ103V	RESISTOR	
R1036	ERJ3GEYJ470V	RESISTOR	
R1037	ERJ3GEYJ104V	RESISTOR	
R1038	ERJ3GEYJ472V	RESISTOR	
R1039	ERJ3GEYJ153V	RESISTOR	
R1040	ERJ3GEYJ563V	RESISTOR	
R1045	ERJ3GEYJ104V	RESISTOR	
R1046	ERJ3GEYJ104V	RESISTOR	
R1047	ERJ3GEYJ102V	RESISTOR	
R1048	ERJ3GEYJ102V	RESISTOR	
R1049	ERJ3GEYJ105V	RESISTOR	
R1050	ERJ3GEYJ105V	RESISTOR	
R1051	ERJ3GEYJ221V	RESISTOR	
R1052	ERJ3GEYJ221V	RESISTOR	
R1053	ERJ3GEYJ681V	RESISTOR	
R1054	ERJ3GEYJ681V	RESISTOR	
R1055	ERJ3GEYJ222V	RESISTOR	
R1056	ERJ3GEYJ221V	RESISTOR	
R1057	ERJ3GEYJ222V	RESISTOR	
R1058	ERJ3GEYJ272V	RESISTOR	
R1059	ERJ3GEYJ103V	RESISTOR	
R1060	ERJ3GEYJ391V	RESISTOR	
R1061	ERJ3GEYJ2R7V	RESISTOR	

Ref	Part	Description	Mark
R1062	ERJ3GEYJ2R7V	RESISTOR	
R1063	ERJ3GEYJ102V	RESISTOR	
R1064	ERJ3GEYJ102V	RESISTOR	
R1065	ERJ3GEYJ102V	RESISTOR	
R1066	ERJ3GEYJ102V	RESISTOR	
R1075	ERJ3GEYJ222V	RESISTOR	
R1076	ERJ3GEYJ222V	RESISTOR	
R1079	ERJ3GEYJ472V	RESISTOR	
R1080	ERJ3GEYJ472V	RESISTOR	
R1084	ERJ3GEYJ222V	RESISTOR	
R1085	ERJ3GEYJ473V	RESISTOR	
R1086	ERJ3GEYJ222V	RESISTOR	
R1087	ERJ3GEYJ473V	RESISTOR	
R1088	ERJ3GEYJ223V	RESISTOR	
R1089	ERJ3GEYJ223V	RESISTOR	
R1090	ERJ3GEYJ221V	RESISTOR	
R1091	ERJ3GEYJ222V	RESISTOR	
R1092	ERJ3GEYJ222V	RESISTOR	
R1093	ERJ3GEYJ102V	RESISTOR	
R1094	ERJ3GEYJ102V	RESISTOR	
R1095	ERJ3GEYJ104V	RESISTOR	
R1096	ERJ3GEYJ104V	RESISTOR	
R1097	ERJ3GEYJ103V	RESISTOR	
R1098	ERJ3GEYJ103V	RESISTOR	
R1099	ERJ6GEY0R00V	RESISTOR	
R1100	ERJ6GEY0R00V	RESISTOR	
R1101	ERJ6GEY0R00V	RESISTOR	
R1102	ERJ6GEY0R00V	RESISTOR	
R1103	ERJ6GEY0R00V	RESISTOR	
R1104	ERJ6GEY0R00V	RESISTOR	
R1105	ERJ6GEY0R00V	RESISTOR	
R1200	ERJ3GEYJ563V	RESISTOR	
		CAPACITORS	
C1	ECBT1H5R6KC5	CAPACITOR	
C2	RCBS1H102KBY	CAPACITOR	
C3	ECBT1H2R2KC5	CAPACITOR	
C4	ECBT1H181KB5	CAPACITOR	
C5	ECBT1H5R6KC5	CAPACITOR	
C6	ECBT1H3R3KC5	CAPACITOR	
C7	ECBT1H4R7KC5	CAPACITOR	
C8	ECBT1H3R3KC5	CAPACITOR	
C9	ECBT1H2R2KC5	CAPACITOR	
C10	ECBT1H180JC5	CAPACITOR	
C11	RCBS1H102KBY	CAPACITOR	
C101	ECUV1E103KBV	CAPACITOR	
C102	ECEA1CKA100B	CAPACITOR	
C103	ECUV1E103KBV	CAPACITOR	
C104	ECUV1H102KBV	CAPACITOR	
C106	ECUV1E103KBV	CAPACITOR	
C107	ECUV1E473ZFV	CAPACITOR	
C108	ECUV1H080DCV	CAPACITOR	
C109	ECUV1H102KBV	CAPACITOR	
C110	ECUV1E103KBV	CAPACITOR	
C111	ECEA1HKA4R7B	CAPACITOR	
C112	ECUV1E103KBV	CAPACITOR	
C113	ECUV1H102KBV	CAPACITOR	
C114	ECEA1HKA3R3B	CAPACITOR	
C115	ECEA1HKA4R7B	CAPACITOR	
C116	ECUV1C333KBV	CAPACITOR	
C117	ECUV1E103KBV	CAPACITOR	
C118	ECUV1E103KBV	CAPACITOR	
C119	ECQP2A681JZT	CAPACITOR	
C120	ECEA1CKA100B	CAPACITOR	
C121	ECEA1HKAR47B	CAPACITOR	
C122	ECEA1HKA010B	CAPACITOR	
C123	ECEA1HKA010B	CAPACITOR	
C124	ECUV1H101KCV	CAPACITOR	

Ref	Part	Description	Mark
C125	ECEA1CKA220B	CAPACITOR	
C126	ECUV1C105ZFN	CAPACITOR	
C127	ECEA1CKA220B	CAPACITOR	
C129	ECEA0JKA101B	CAPACITOR	
C130	ECEA0JKA101B	CAPACITOR	
C131	ECUV1H151JCV	CAPACITOR	
C132	ECUV1H102KBV	CAPACITOR	
C133	ECUV1H270JCV	CAPACITOR	
C134	ECUV1H270JCV	CAPACITOR	
C136	ECUV1H102KBV	CAPACITOR	
C137	ECUV1H332KBV	CAPACITOR	
C138	ECUV1E103KBV	CAPACITOR	
C139	ECEA1HKA4R7B	CAPACITOR	
C141	ECEA1HKA010B	CAPACITOR	
C142	ECEA1HKA010B	CAPACITOR	
C143	ECUV1H682KBV	CAPACITOR	
C144	ECUV1H682KBV	CAPACITOR	
C147	ECUV1H102KBV	CAPACITOR	
C148	ECUV1E103KBV	CAPACITOR	
C149	ECUV1C104ZFV	CAPACITOR	
C201	ECUV1H681KBV	CAPACITOR	
C202	ECUV1H101KCV	CAPACITOR	
C203	ECUV1H222KBV	CAPACITOR	
C204	ECEA1CKA100B	CAPACITOR	
C205	ECEA1HKA010B	CAPACITOR	
C206	ECEA1HKA010B	CAPACITOR	
C207	ECEA1HKAR22B	CAPACITOR	
C208	ECEA1CKA100B	CAPACITOR	
C209	ECEA1HKA2R2B	CAPACITOR	
C210	ECEA1HKA2R2B	CAPACITOR	
C211	ECEA1HKA2R2B	CAPACITOR	
C212	ECEA1HKA4R7B	CAPACITOR	
C214	ECEA1CKA100B	CAPACITOR	
C215	ECUV1C104KBV	CAPACITOR	
C216	ECEA1HKAR33B	CAPACITOR	
C217	ECEA1HKAR33B	CAPACITOR	
C218	ECUV1C104KBV	CAPACITOR	
C219	ECUV1C104KBV	CAPACITOR	
C220	ECUV1H182KBV	CAPACITOR	
C221	ECEA1HKA2R2B	CAPACITOR	
C222	ECEA1CKA100B	CAPACITOR	
C223	ECUV1E103KBV	CAPACITOR	
C224	ECUV1H473KBV	CAPACITOR	
C225	ECUV1H101KCV	CAPACITOR	
C226	ECEA1HKAR68B	CAPACITOR	
C227	ECUV1H101KCV	CAPACITOR	
C228	ECUV1H470JCV	CAPACITOR	
C229	ECEA1CKA100B	CAPACITOR	
C230	ECEA1CKA100B	CAPACITOR	
C231	ECUV1H102KBV	CAPACITOR	
C232	ECEA1HKAR33B	CAPACITOR	
C233	ECUV1H102KBV	CAPACITOR	
C234	ECUV1H682KBV	CAPACITOR	
C235	ECUV1H682KBV	CAPACITOR	
C236	ECEA1HKA010B	CAPACITOR	
C237	ECUV1H472KBV	CAPACITOR	
C238	ECUV1H182KBV	CAPACITOR	
C240	ECEA1HKAR22B	CAPACITOR	
C241	ECUV1C393KBV	CAPACITOR	
C242	ECUV1H682KBV	CAPACITOR	
C248	ECEA1HKAR22B	CAPACITOR	
C303	ECUV1H102KBV	CAPACITOR	
C304	ECUV1E103KBV	CAPACITOR	
C305	ECEA1CKA100B	CAPACITOR	
C306	ECEA1CKA100B	CAPACITOR	
C307	ECUV1H101KCV	CAPACITOR	
C308	ECUV1H101KCV	CAPACITOR	
C309	ECEA1AM221B	CAPACITOR	
C310	ECEA1AKN100B	CAPACITOR	

Ref	Part	Description	Mark
C311	ECEA1CKA330B	CAPACITOR	
C318	ECUV1E103KBV	CAPACITOR	
C319	ECUV1E103KBV	CAPACITOR	
C320	ECUV1C474ZFV	CAPACITOR	
C321	ECUV1C104KBV	CAPACITOR	
C322	ECUV1C104KBV	CAPACITOR	
C333	ECKR1H102ZF5	CAPACITOR	
C336	ECUV1E103KBV	CAPACITOR	
C370	ECUV1E103KBV	CAPACITOR	
C371	ECUV1C104KBV	CAPACITOR	
C372	ECA1CM221B	CAPACITOR	
C373	RCE1HKN100BG	CAPACITOR	
C375	ECEA1HM101B	CAPACITOR	
C376	ECUV1E103KBV	CAPACITOR	
C377	ECUV1E103KBV	CAPACITOR	
C401	ECUV1H681KBV	CAPACITOR	
C402	ECUV1H101KCV	CAPACITOR	
C403	ECUV1H222KBV	CAPACITOR	
C404	ECEA1CKA100B	CAPACITOR	
C405	ECEA1HKA010B	CAPACITOR	
C406	ECEA1HKA010B	CAPACITOR	
C407	ECEA1HKAR22B	CAPACITOR	
C408	ECEA1CKA100B	CAPACITOR	
C409	ECEA1HKA2R2B	CAPACITOR	
C410	ECEA1HKA2R2B	CAPACITOR	
C411	ECEA1HKA2R2B	CAPACITOR	
C412	ECEA1HKA4R7B	CAPACITOR	
C414	ECEA1CKA100B	CAPACITOR	
C415	ECUV1C104KBV	CAPACITOR	
C416	ECEA1HKAR33B	CAPACITOR	
C417	ECEA1HKAR33B	CAPACITOR	
C418	ECUV1C104KBV	CAPACITOR	
C419	ECUV1C104KBV	CAPACITOR	
C420	ECUV1H182KBV	CAPACITOR	
C421	ECEA1HKA2R2B	CAPACITOR	
C422	ECEA1CKA100B	CAPACITOR	
C423	ECUV1E103KBV	CAPACITOR	
C424	ECUV1H473KBV	CAPACITOR	
C425	ECUV1H101KCV	CAPACITOR	
C426	ECEA1HKAR68B	CAPACITOR	
C427	ECUV1H101KCV	CAPACITOR	
C428	ECUV1H470JCV	CAPACITOR	
C429	ECEA1CKA100B	CAPACITOR	
C430	ECEA1CKA100B	CAPACITOR	
C431	ECUV1H102KBV	CAPACITOR	
C432	ECEA1HKAR33B	CAPACITOR	
C433	ECUV1H102KBV	CAPACITOR	
C434	ECUV1H682KBV	CAPACITOR	
C435	ECUV1H682KBV	CAPACITOR	
C436	ECEA1HKA010B	CAPACITOR	
C437	ECUV1H472KBV	CAPACITOR	
C438	ECUV1H182KBV	CAPACITOR	
C440	ECEA1HKAR22B	CAPACITOR	
C441	ECUV1C393KBV	CAPACITOR	
C442	ECUV1H682KBV	CAPACITOR	
C443	ECEA1HKAR22B	CAPACITOR	
C448	ECEA1HKAR22B	CAPACITOR	
C500	ECBT1H471KB5	CAPACITOR	
C501	ECBT1H471KB5	CAPACITOR	
C502	ECBT1H821KB5	CAPACITOR	
C503	ECBT1H821KB5	CAPACITOR	
C504	ECEA2AU100B	CAPACITOR	
C505	ECEA1HKA010B	CAPACITOR	
C506	ECEA1HKA010B	CAPACITOR	
C507	ECEA2AU100B	CAPACITOR	
C508	ECBT1H150J5	CAPACITOR	
C509	ECBT1H150J5	CAPACITOR	
C510	ECBT1H103KB5	CAPACITOR	
C511	ECBT1H821KB5	CAPACITOR	

Ref	Part	Description	Mark
C512	ECBT1H471KB5	CAPACITOR	
C513	ECBT1H471KB5	CAPACITOR	
C514	ECBT1H821KB5	CAPACITOR	
C515	ECEA1HKA010B	CAPACITOR	
C516	ECQV1H184JL3	CAPACITOR	
C517	ECKR1H103MD5	CAPACITOR	
C518	ECEA1EM101B	CAPACITOR	
C519	ECKR1H103MD5	CAPACITOR	
C520	ECKR1H103MD5	CAPACITOR	
C521	ECEA1CKA101B	CAPACITOR	
C522	ECKR1H103MD5	CAPACITOR	
C524	ECKR1H103MD5	CAPACITOR	
C525	ECEA1AKA330B	CAPACITOR	
C526	ECKR1H103MD5	CAPACITOR	
C527	ECEA1EKA330B	CAPACITOR	
C528	RCEA1H222B-S	CAPACITOR	⚠
C529	RCEA1H222B-S	CAPACITOR	⚠
C530	ECEA0JKA221B	CAPACITOR	
C531	ECEA1HKA010B	CAPACITOR	
C532	ECEA2AU100B	CAPACITOR	
C533	ECBT1H150J5	CAPACITOR	
C534	ECBT1H150J5	CAPACITOR	
C535	ECEA2AU100B	CAPACITOR	
C536	ECBT1H103KB5	CAPACITOR	
C537	ECEA1HKA2R2B	CAPACITOR	
C538	ECEA1CKA100B	CAPACITOR	
C539	ECEA1EM101B	CAPACITOR	
C540	ECEA1CKA100B	CAPACITOR	
C547	ECBT1H102KB5	CAPACITOR	
C600	ECEA0JKA101B	CAPACITOR	
C601	ECBT1H104ZF5	CAPACITOR	
C602	ECBT1E103ZF5	CAPACITOR	
C603	ECBT1H331KB5	CAPACITOR	
C604	RCE1AM102B	CAPACITOR	
C605	ECBT1H102KB5	CAPACITOR	
C607	ECBT1H561KB5	CAPACITOR	
C608	ECBT1H561KB5	CAPACITOR	
C609	ECBT1H561KB5	CAPACITOR	
C610	ECBT1H561KB5	CAPACITOR	
C611	ECBT1H561KB5	CAPACITOR	
C612	ECBT1H561KB5	CAPACITOR	
C613	ECBT1H561KB5	CAPACITOR	
C614	ECBT1H561KB5	CAPACITOR	
C616	ECBT1H561KB5	CAPACITOR	
C617	ECBT1H561KB5	CAPACITOR	
C618	ECBT1E103ZF5	CAPACITOR	
C619	ECEA1AKA220B	CAPACITOR	
C620	ECBT1H680J5	CAPACITOR	
C621	ECBT1H680J5	CAPACITOR	
C622	ECBT1H150JC5	CAPACITOR	
C623	ECBT1H180JC5	CAPACITOR	
C624	ECBT1H560J5	CAPACITOR	
C625	ECBT1H102KB5	CAPACITOR	
C626	ECBT1H560J5	CAPACITOR	
C627	ECBT1H102KB5	CAPACITOR	
C628	ECBT1E223ZF5	CAPACITOR	
C629	ECBT1H331KB5	CAPACITOR	
C639	ECEA1HKA3R3B	CAPACITOR	
C640	ECEA1VKA220B	CAPACITOR	
C641	ECEA1VKA220B	CAPACITOR	
C642	ECBT1H101KB5	CAPACITOR	
C643	ECBT1H101KB5	CAPACITOR	
C644	ECEA1HKA010B	CAPACITOR	
C645	ECEA1HKA2R2B	CAPACITOR	
C646	ECBT1H330J5	CAPACITOR	
C647	ECBT1H330J5	CAPACITOR	
C649	ECBT1H331KB5	CAPACITOR	
C651	ECBT1H103KB5	CAPACITOR	
C652	ECBT1H103KB5	CAPACITOR	

Ref	Part	Description	Mark
C653	ECBT1H101KB5	CAPACITOR	
C654	ECBT1H101KB5	CAPACITOR	
C655	ECBT1H102KB5	CAPACITOR	
C656	ECBT1E103ZF5	CAPACITOR	
C657	ECKR1H103ZF5	CAPACITOR	
C658	ECEA1VKA4R7B	CAPACITOR	
C669	ECEA0JKA470B	CAPACITOR	
C670	ECBT1H473ZF5	CAPACITOR	
C671	ECBT1E223ZF5	CAPACITOR	
C672	ECBT1E223ZF5	CAPACITOR	
C801	ECUV1H223KBV	CAPACITOR	
C802	ECUV1H331KBV	CAPACITOR	
C803	ECUV1H102KBV	CAPACITOR	
C804	ECEA0JKA101B	CAPACITOR	
C805	ECEA1AKA101B	CAPACITOR	
C806	ECUV1H471KBV	CAPACITOR	
C807	ECUV1H101KCV	CAPACITOR	
C808	ECUV1H101KCV	CAPACITOR	
C809	ECUV1H101KCV	CAPACITOR	
C810	ECUV1H102KBV	CAPACITOR	
C811	ECUV1C474ZFV	CAPACITOR	
C812	ECUV1H100JCV	CAPACITOR	
C813	ECUV1C104KBV	CAPACITOR	
C814	ECUV1H100JCV	CAPACITOR	
C815	ECUV1H100JCV	CAPACITOR	
C816	ECUV1E103KBV	CAPACITOR	
C817	ECUV1H100JCV	CAPACITOR	
C818	ECUV1H330JCV	CAPACITOR	
C819	ECUV1H330JCV	CAPACITOR	
C820	ECUV1C104KBV	CAPACITOR	
C822	ECEA0JKA101B	CAPACITOR	
C823	ECUV1H102KBV	CAPACITOR	
C824	ECEA0JKA101B	CAPACITOR	
C828	ECEA0JKA221B	CAPACITOR	
C829	ECEA1AKA101B	CAPACITOR	
C830	ECEA1AKA101B	CAPACITOR	
C831	EEUFC1A681LB	CAPACITOR	
C832	ECEA1HM101B	CAPACITOR	
C833	ECUV1A224KBV	CAPACITOR	
C950	RCA1CM102BT	CAPACITOR	
C951	RCA1CM102BT	CAPACITOR	
C952	ECKR1H103ZF5	CAPACITOR	
C953	ECKR1H103MD5	CAPACITOR	
C954	ECEA1AKA470B	CAPACITOR	
C955	ECQE1104KF3	CAPACITOR	
C956	ECKR1H103MD5	CAPACITOR	
C957	ECEA1JM101B	CAPACITOR	
C960	RCEA1E222B-S	CAPACITOR	⚠
C961	ECEA2AM100B	CAPACITOR	
C962	ECEA1HM101B	CAPACITOR	
C964	ECKR2H103ZF5	CAPACITOR	
C982	ECBT1H473KB5	CAPACITOR	
C983	ECBT1H473KB5	CAPACITOR	
C984	ECBT1H473KB5	CAPACITOR	
C985	ECBT1H473KB5	CAPACITOR	
C1001	ECUV1H103ZFV	CAPACITOR	
C1002	ECEA1HKN2R2B	CAPACITOR	
C1003	ECQP1152JZT	CAPACITOR	
C1006	ECEA1HKA010B	CAPACITOR	
C1007	ECQP2A472JZT	CAPACITOR	
C1008	ECEA1HKA010B	CAPACITOR	
C1009	ECEA1CKA470B	CAPACITOR	
C1010	ECEA1EM101B	CAPACITOR	
C1011	ECQV1H473JL3	CAPACITOR	
C1012	ECUV1H102KBV	CAPACITOR	
C1013	ECUV1H102KBV	CAPACITOR	
C1014	ECUV1H102KBV	CAPACITOR	
C1015	ECUV1H102KBV	CAPACITOR	
C1016	ECUV1H222KBV	CAPACITOR	

Ref	Part	Description	Mark
C1017	ECUV1H222KBV	CAPACITOR	
C1018	ECUV1H103KBV	CAPACITOR	
C1019	ECUV1H102KBV	CAPACITOR	
C1020	ECUV1H471KBV	CAPACITOR	
C1021	ECUV1H471KBV	CAPACITOR	
C1022	ECUV1H102KBV	CAPACITOR	
C1023	ECUV1H102KBV	CAPACITOR	
C1026	ECEA0JKA470B	CAPACITOR	
C1027	ECUV1H102KBV	CAPACITOR	
C1030	ECEA1AKA101B	CAPACITOR	
C1031	ECEA1AKA101B	CAPACITOR	
C1032	ECFR1C183KR	CAPACITOR	
C1033	ECFR1C183KR	CAPACITOR	
C1034	ECEA1HKA3R3B	CAPACITOR	
C1035	ECEA1HKA3R3B	CAPACITOR	
C1036	ECUV1C333KBV	CAPACITOR	
C1037	ECEA1HKA3R3B	CAPACITOR	
C1038	ECUV1H221KBV	CAPACITOR	
C1039	ECUV1H221KBV	CAPACITOR	
C1040	ECEA1CKA100B	CAPACITOR	
C1041	ECEA1CKA100B	CAPACITOR	
C1042	ECEA1CKA220B	CAPACITOR	
C1043	ECEA1HKA4R7B	CAPACITOR	
C1044	ECEA1AKA330B	CAPACITOR	
C1045	ECEA1AKA220B	CAPACITOR	
C1046	ECEA1CKA221B	CAPACITOR	
C1047	ECEA1HKA010B	CAPACITOR	
C1048	ECEA1HKA010B	CAPACITOR	
C1049	ECUV1H102KBV	CAPACITOR	
C1050	ECUV1H102KBV	CAPACITOR	
C1051	ECEA1HKA010B	CAPACITOR	
C1052	ECEA1HKA010B	CAPACITOR	
C1053	ECEA1CKA221B	CAPACITOR	
C1054	ECEA1HKA3R3B	CAPACITOR	
C1055	ECEA1HKA0R1B	CAPACITOR	
C1059	ECUV1H101KCV	CAPACITOR	
C1061	ECUV1H101KCV	CAPACITOR	
C1062	ECUV1C104ZFV	CAPACITOR	
C1064	ECEA1HKA3R3B	CAPACITOR	