18.1. (A) CD Servo Circuit

SCHEMATIC DIAGRAM - 1

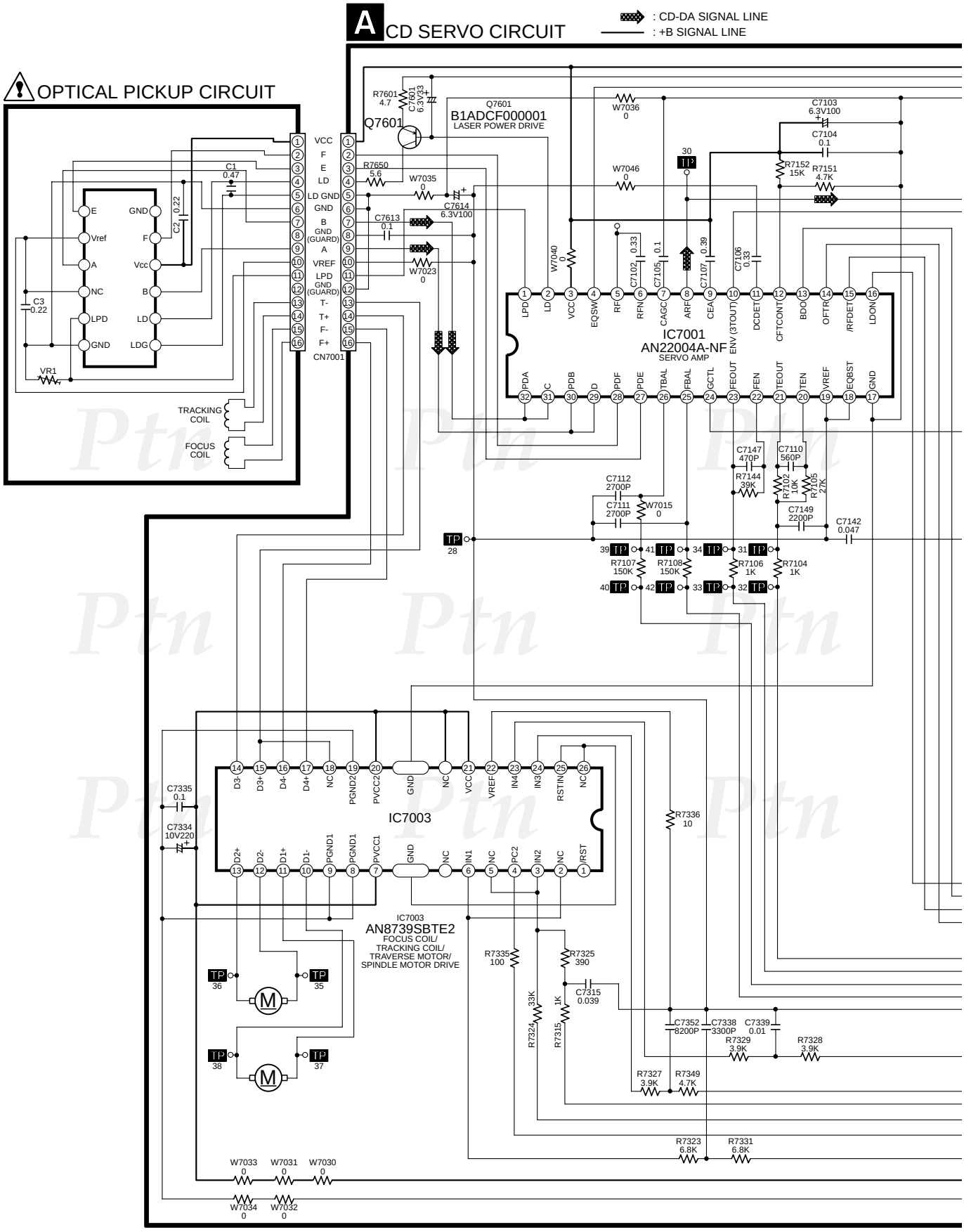

SCHEMATIC DIAGRAM - 2

A CD SERVO CIRCUIT

: CD-DA SIGNAL LINE
: +B SIGNAL LINE

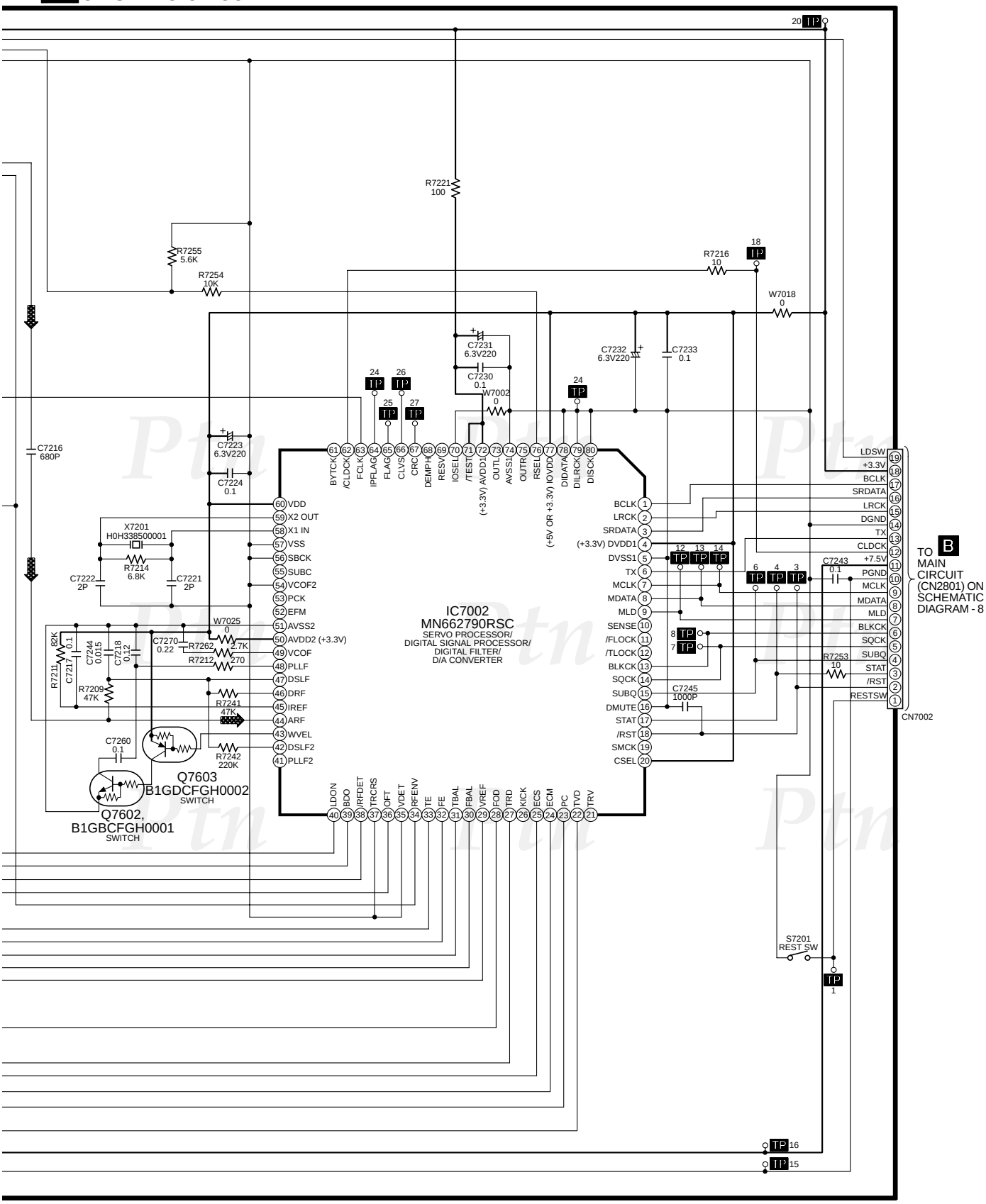

18.2. (B) Tuner/Main Circuit

SCHEMATIC DIAGRAM - 3

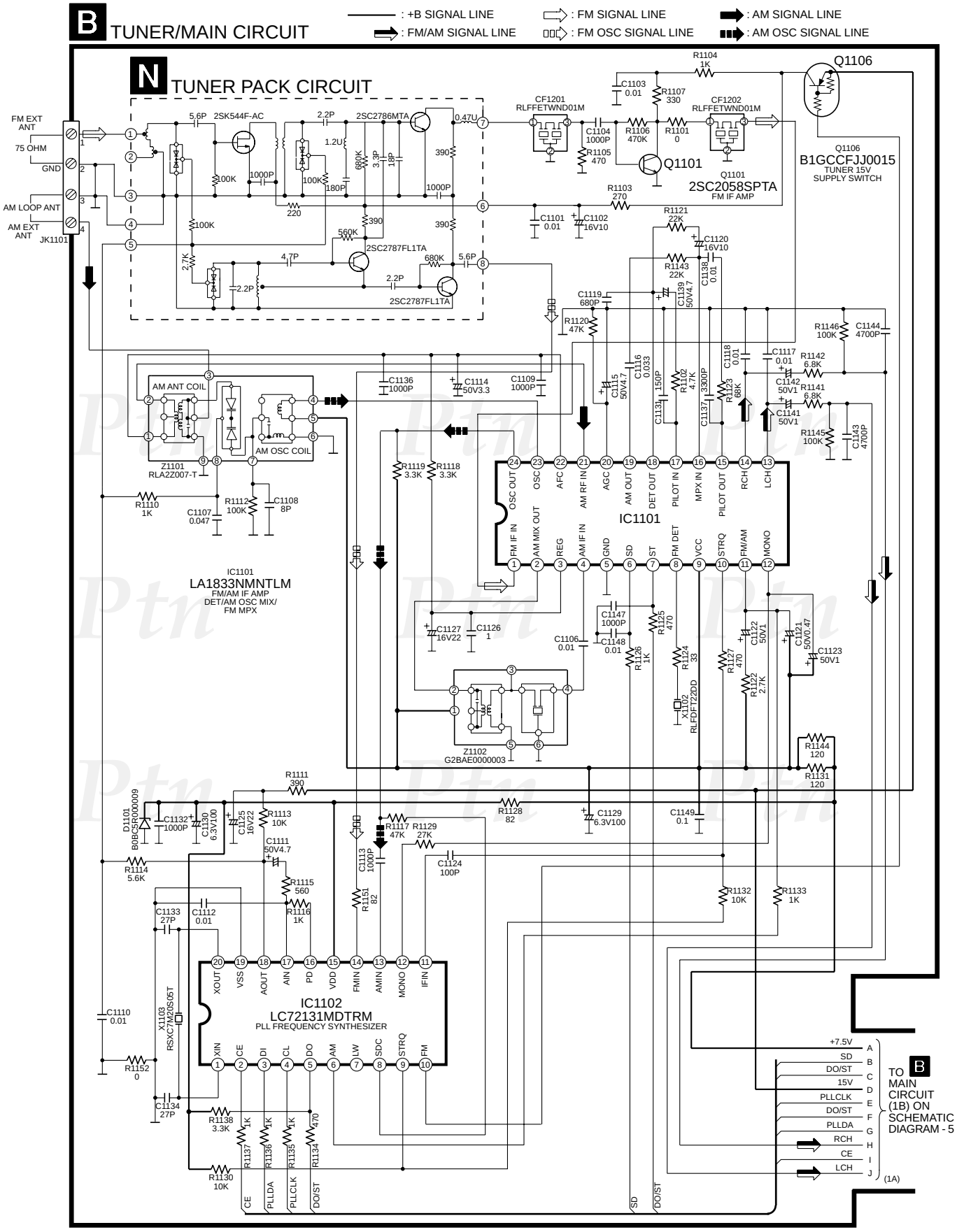

18.3. (B) Main Circuit

SCHEMATIC DIAGRAM - 4

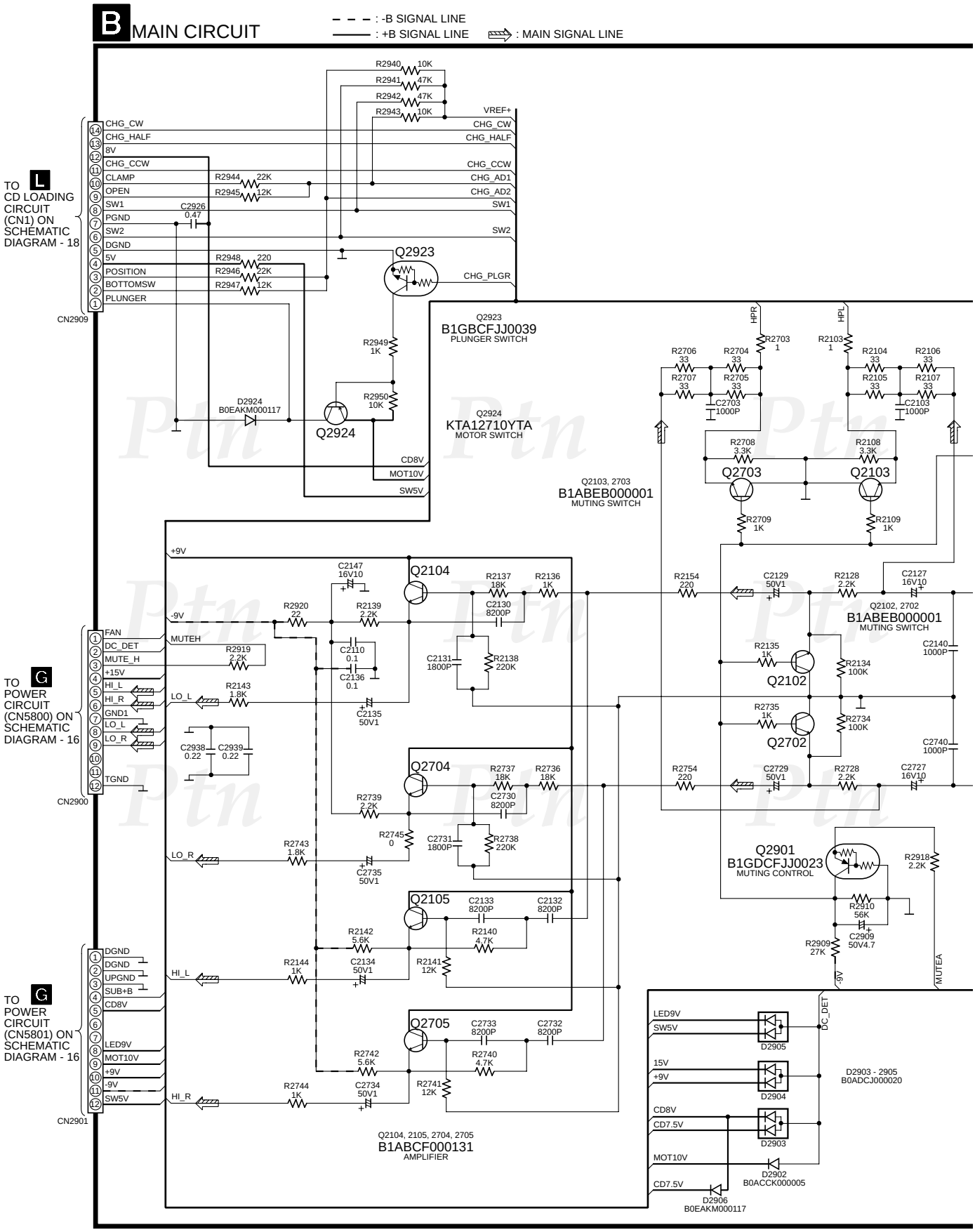

SCHEMATIC DIAGRAM - 5

: PLAYBACK SIGNAL LINE
: RECORD SIGNAL LINE
: -B SIGNAL LINE
: +B SIGNAL LINE
: VCD AUDIO SIGNAL LINE
: AUX SIGNAL LINE
: MIC SIGNAL LINE
: AM/FM SIGNAL LINE
: MAIN SIGNAL LINE

B MAIN CIRCUIT

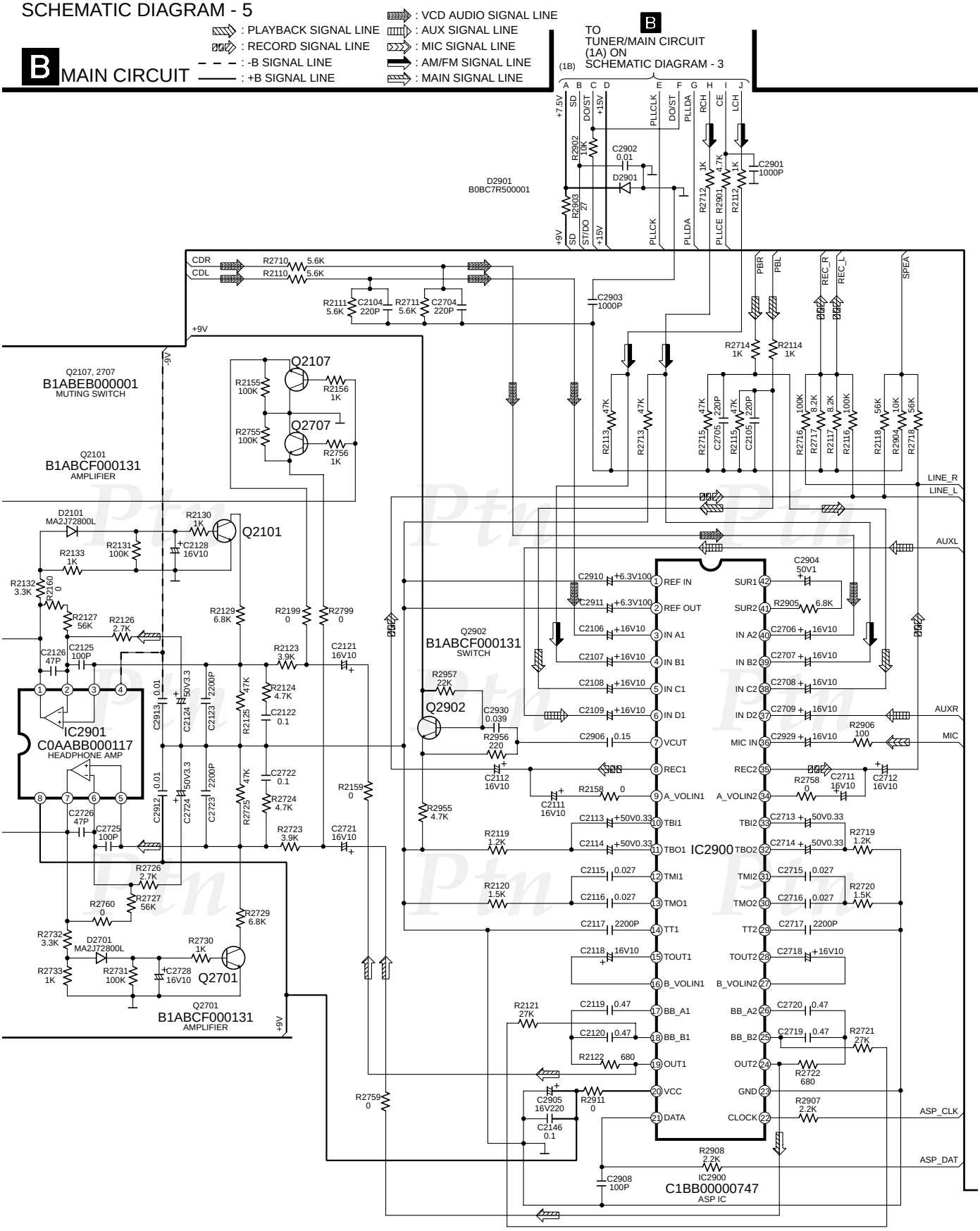

SCHEMATIC DIAGRAM - 6

B MAIN CIRCUIT

- - - - : -B SIGNAL LINE
——— : +B SIGNAL LINE
: AUX SIGNAL LINE
: VCD VIDEO SIGNAL LINE
: MAIN SIGNAL LINE

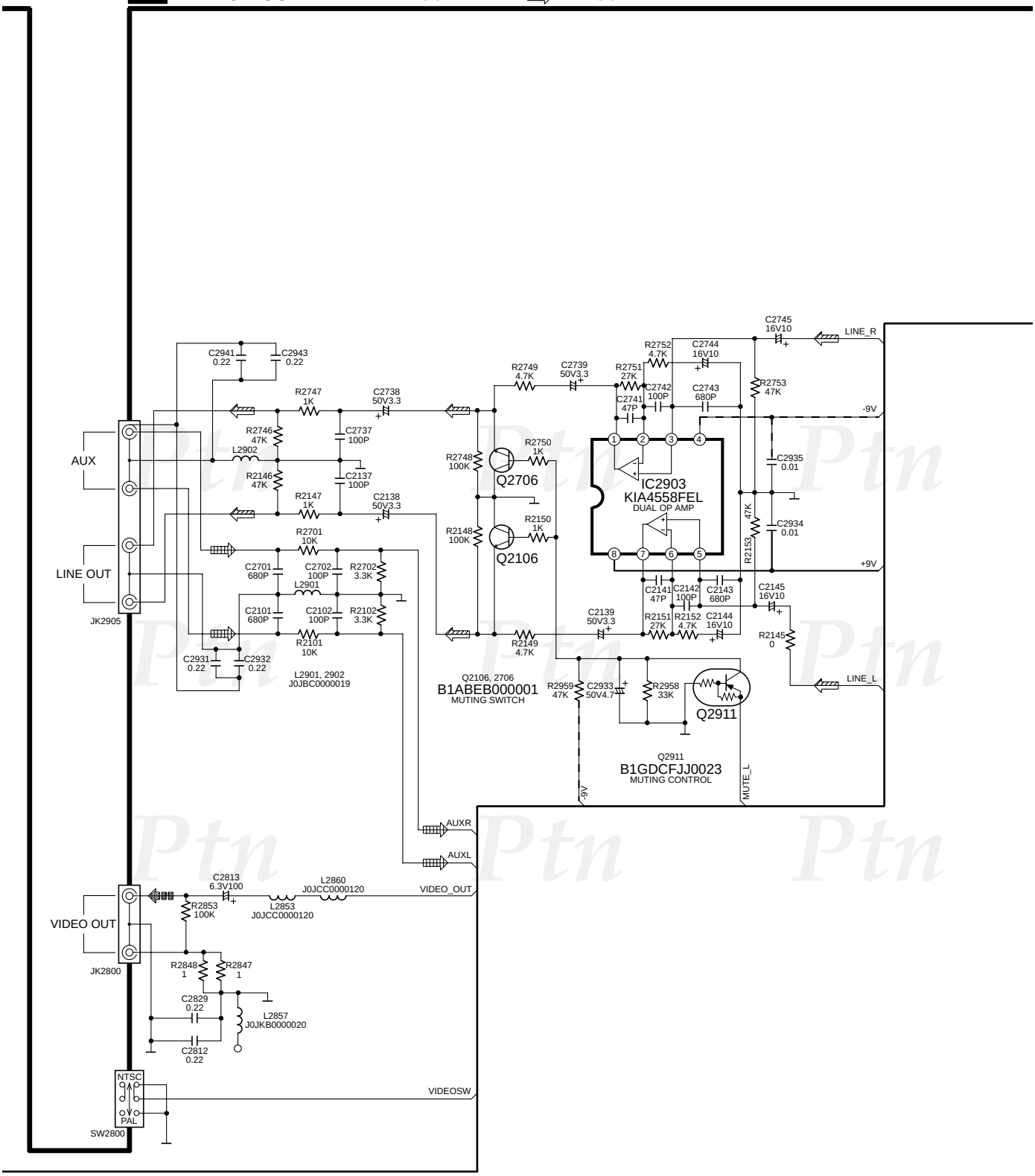

SCHEMATIC DIAGRAM - 7

B MAIN CIRCUIT

- - - - : -B SIGNAL LINE
——— : +B SIGNAL LINE
: PLAYBACK SIGNAL LINE
: RECORD SIGNAL LINE
: MIC SIGNAL LINE
: MAIN SIGNAL LINE

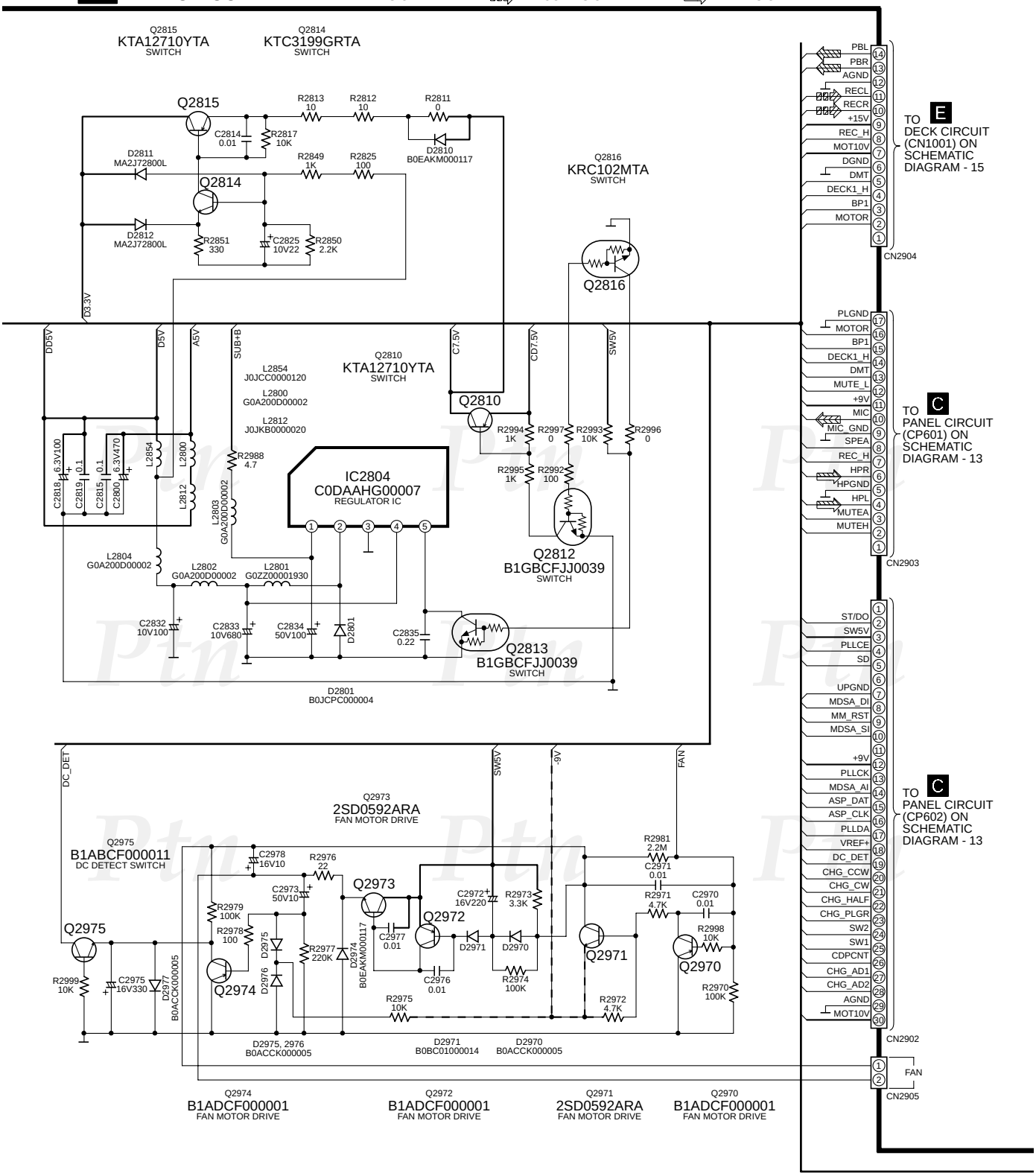

SCHEMATIC DIAGRAM - 8

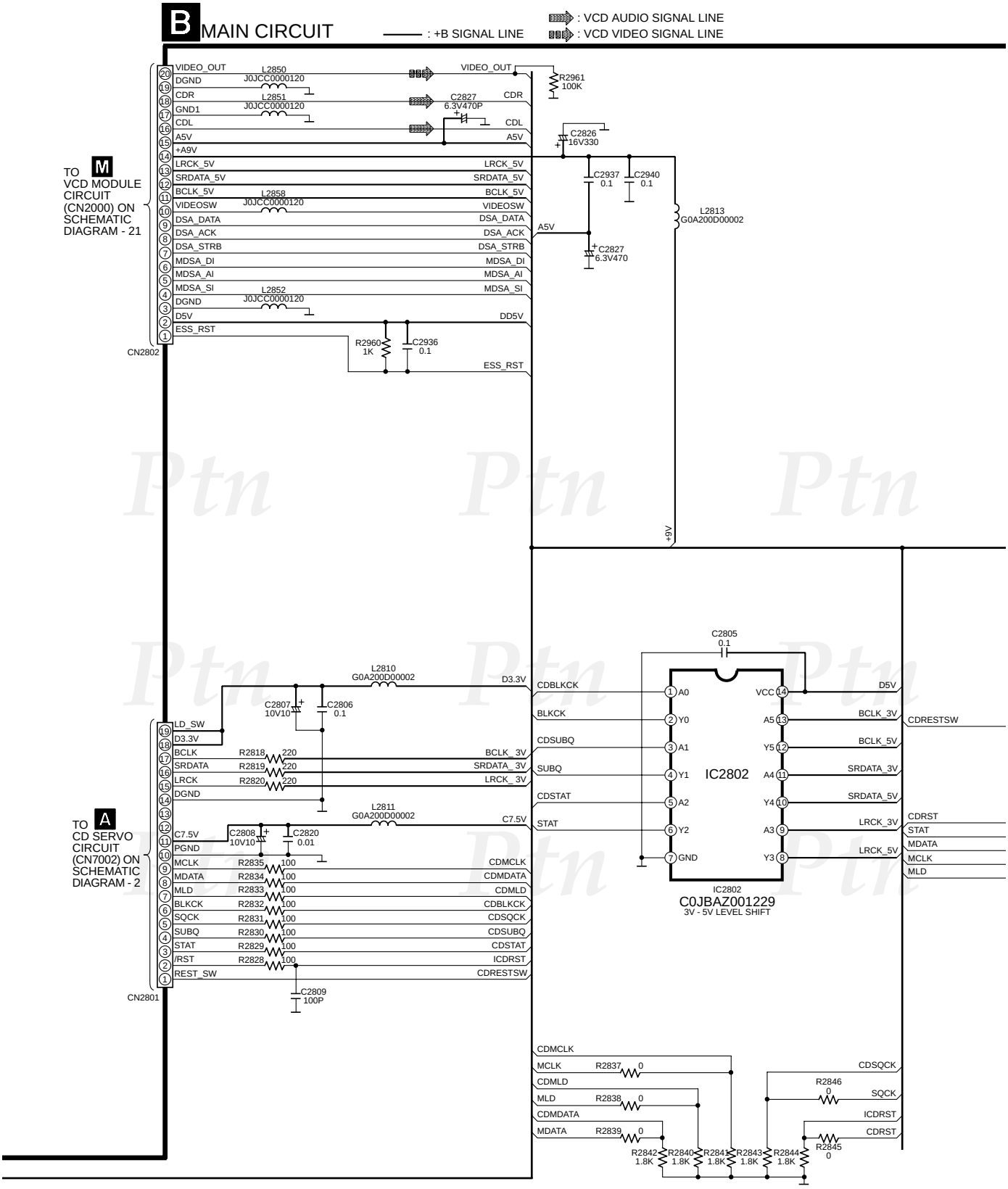

SCHEMATIC DIAGRAM - 9

B MAIN CIRCUIT

——— : +B SIGNAL LINE

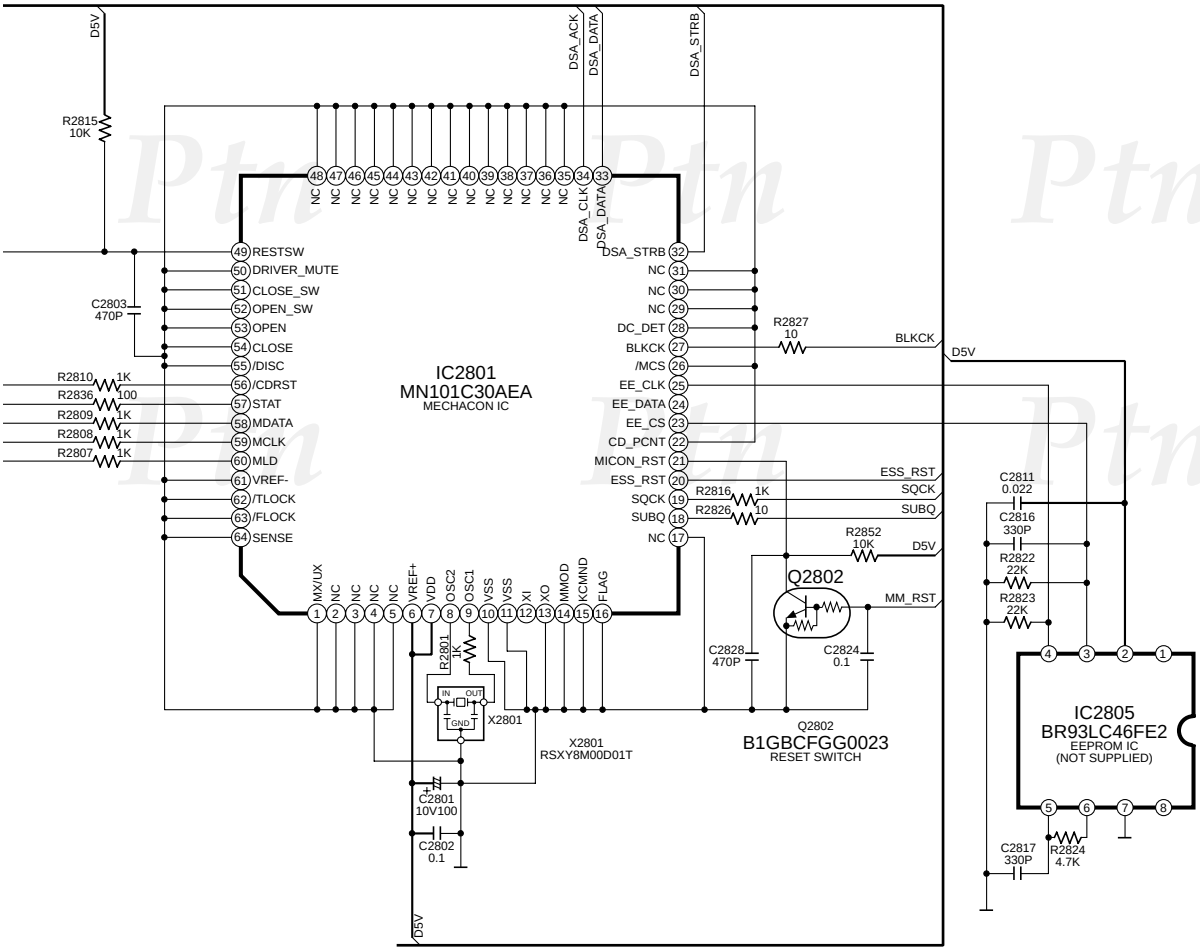

18.4. (C) Panel Circuit & (D) Tact Switch Circuit

SCHEMATIC DIAGRAM - 10

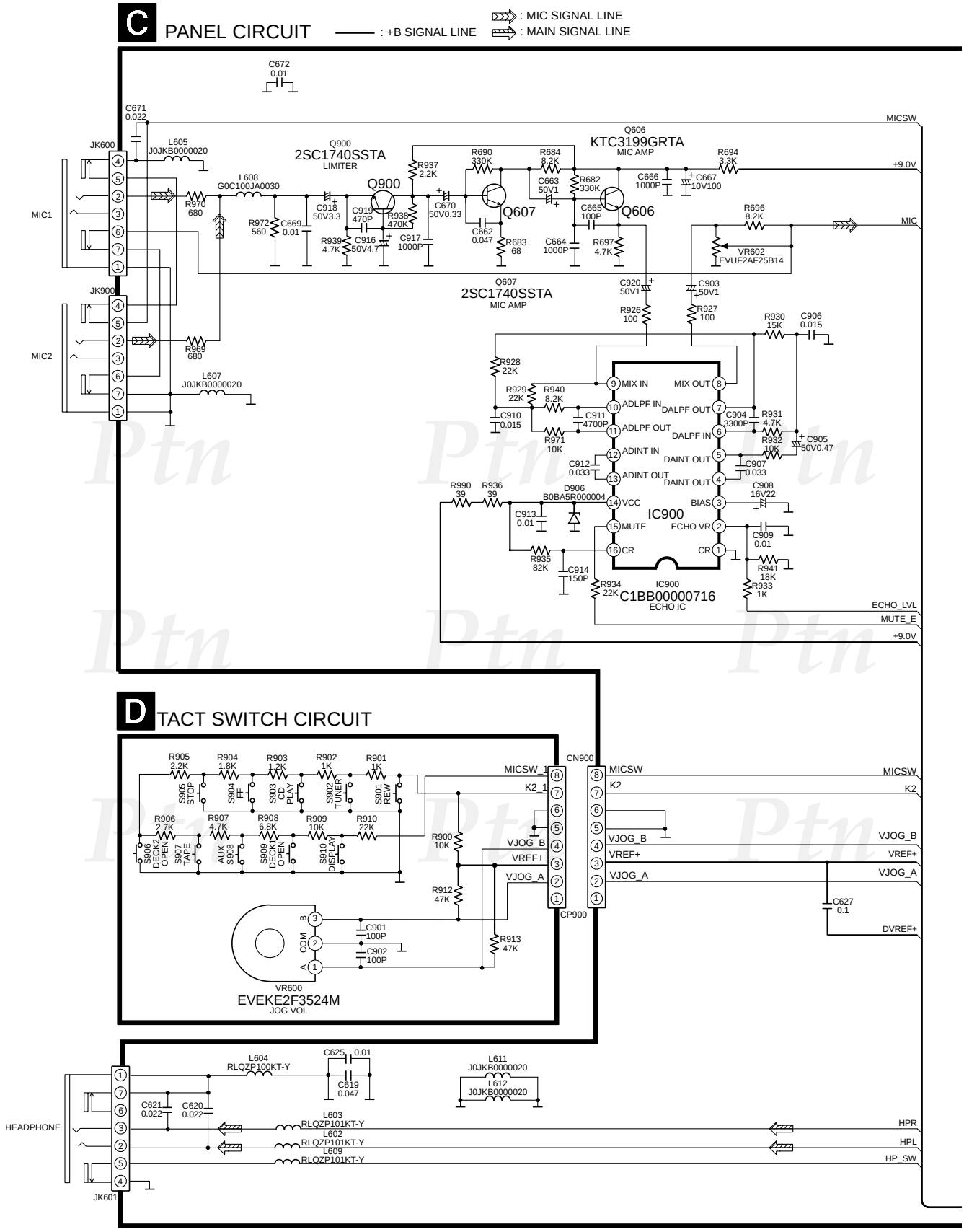

SCHEMATIC DIAGRAM - 11

C PANEL CIRCUIT

—— : +B SIGNAL LINE

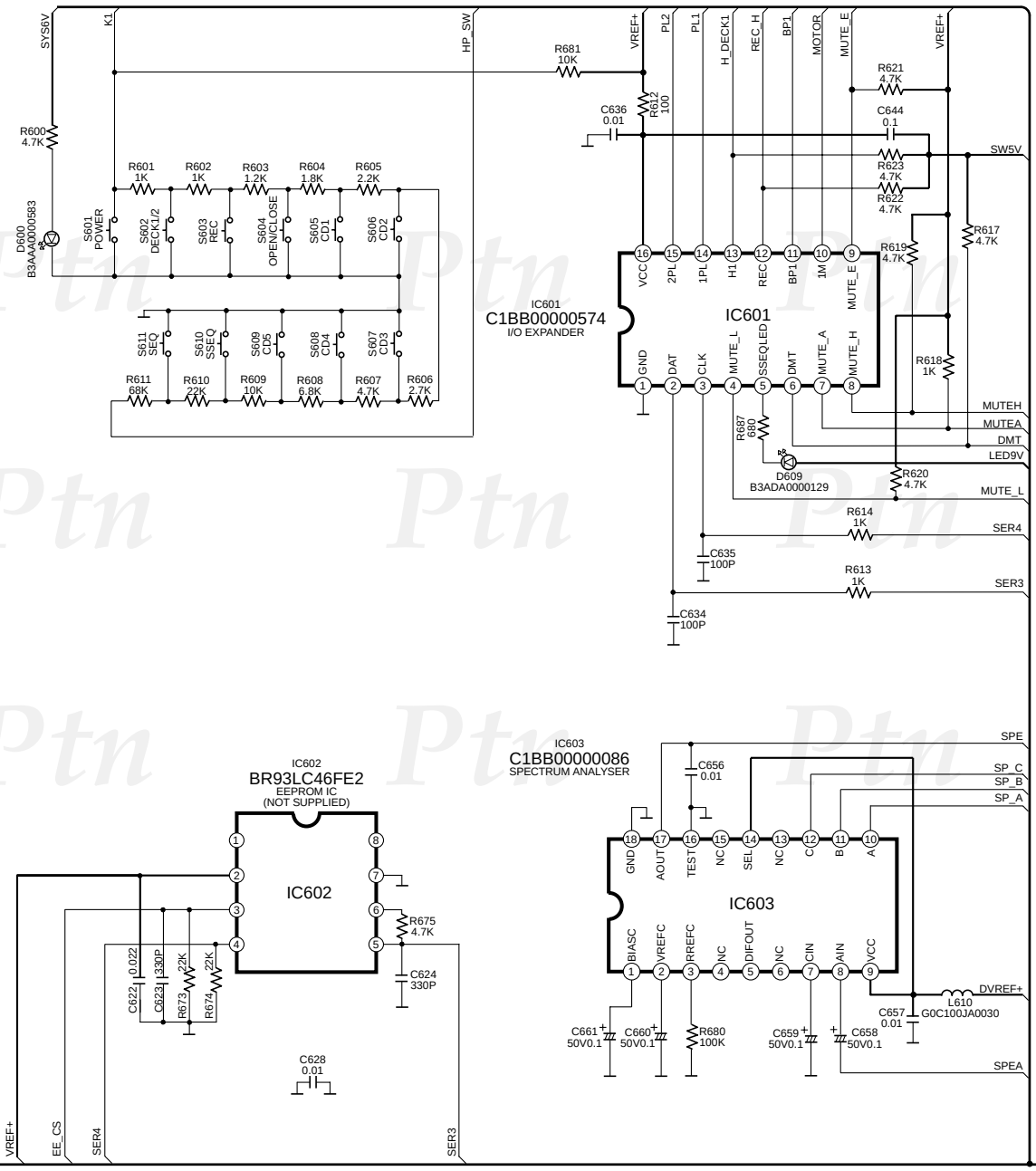

SCHEMATIC DIAGRAM - 12

C PANEL CIRCUIT

– – – : -B SIGNAL LINE
——— : +B SIGNAL LINE

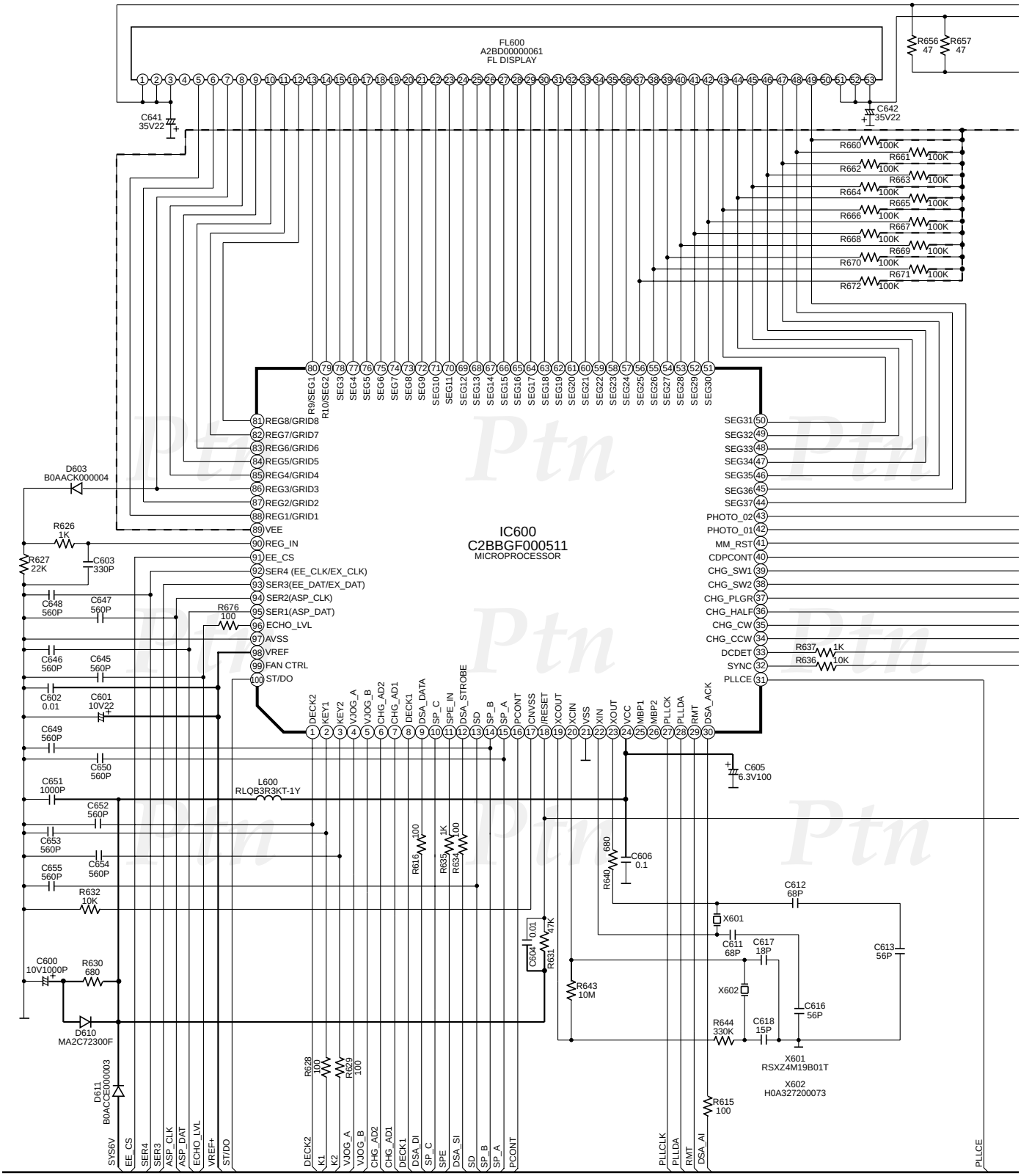

SCHEMATIC DIAGRAM - 13

C PANEL CIRCUIT

- - - : -B SIGNAL LINE
——— : +B SIGNAL LINE
: MIC SIGNAL LINE
: MAIN SIGNAL LINE

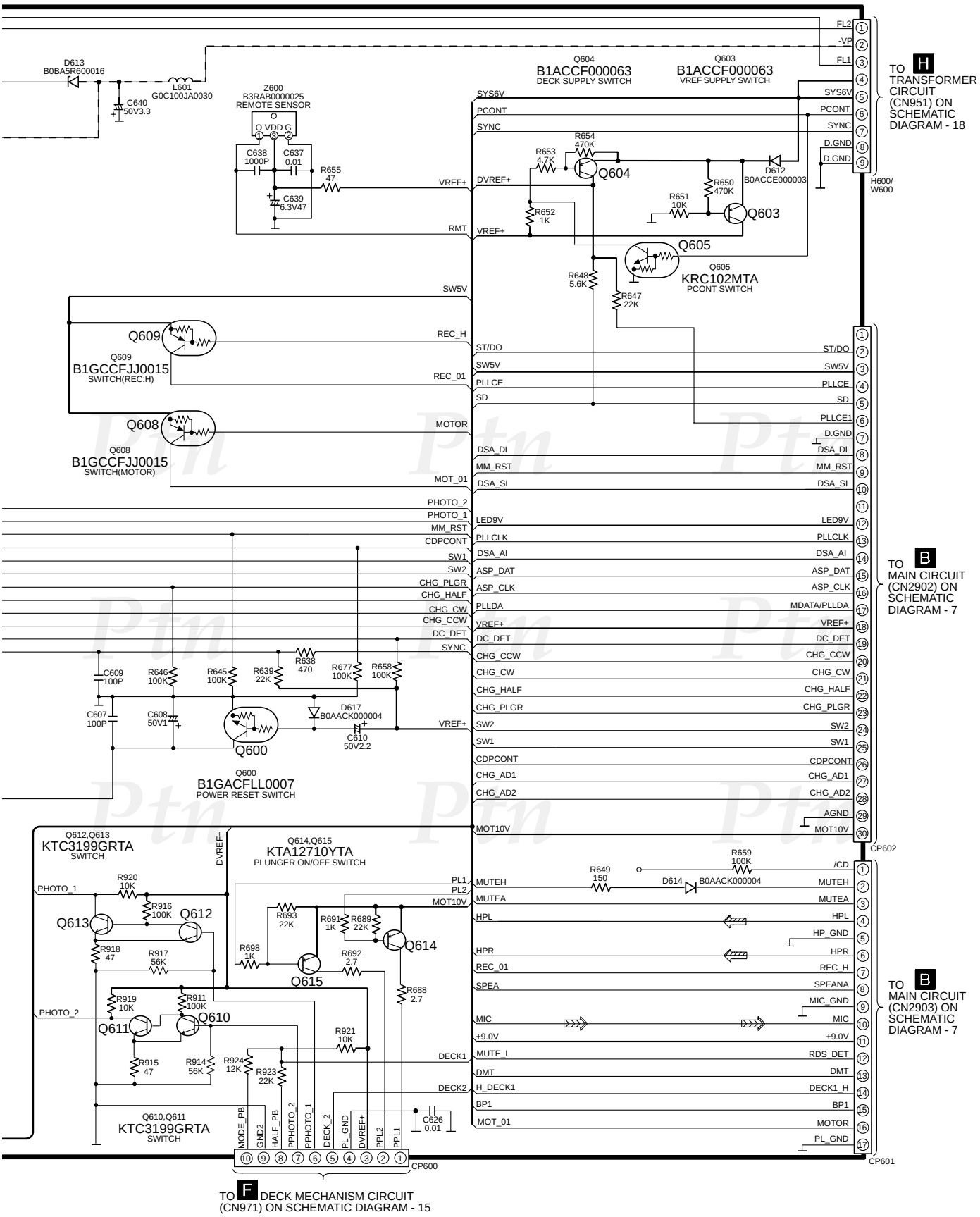

18.5. (E) Deck Circuit & (F) Deck Mechanism Circuit

SCHEMATIC DIAGRAM - 14

: +B SIGNAL LINE
: TAPE PLAYBACK SIGNAL LINE
: TAPE RECORD SIGNAL LINE

E DECK CIRCUIT

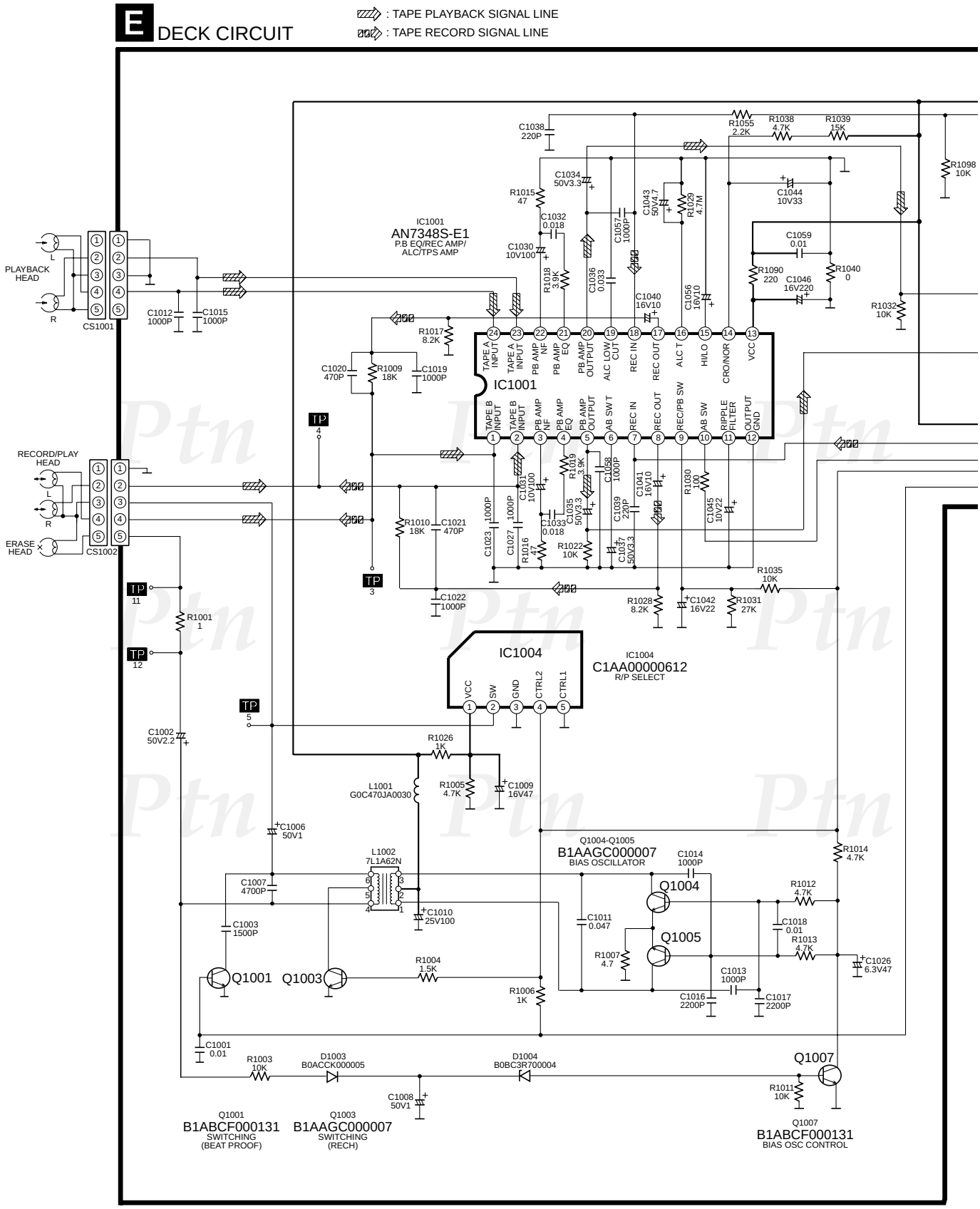

SCHEMATIC DIAGRAM - 15

E DECK CIRCUIT

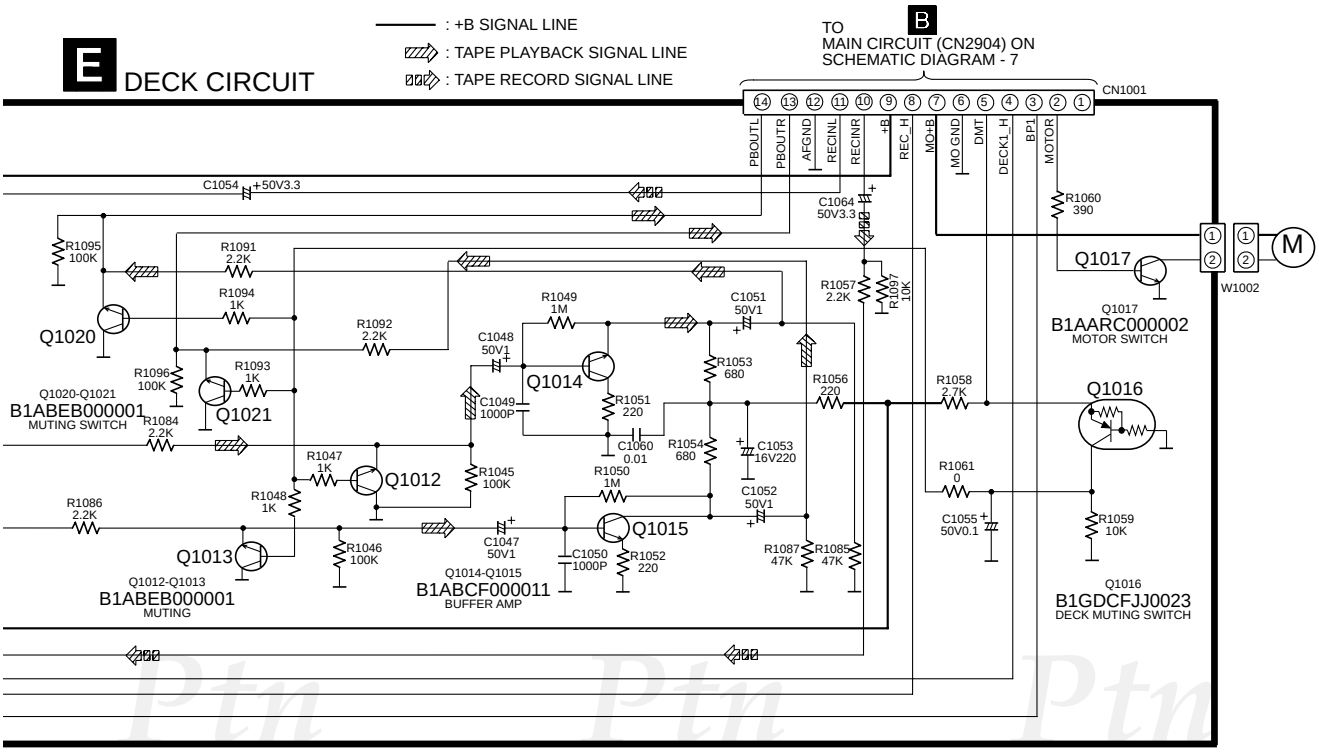

F DECK MECHANISM CIRCUIT

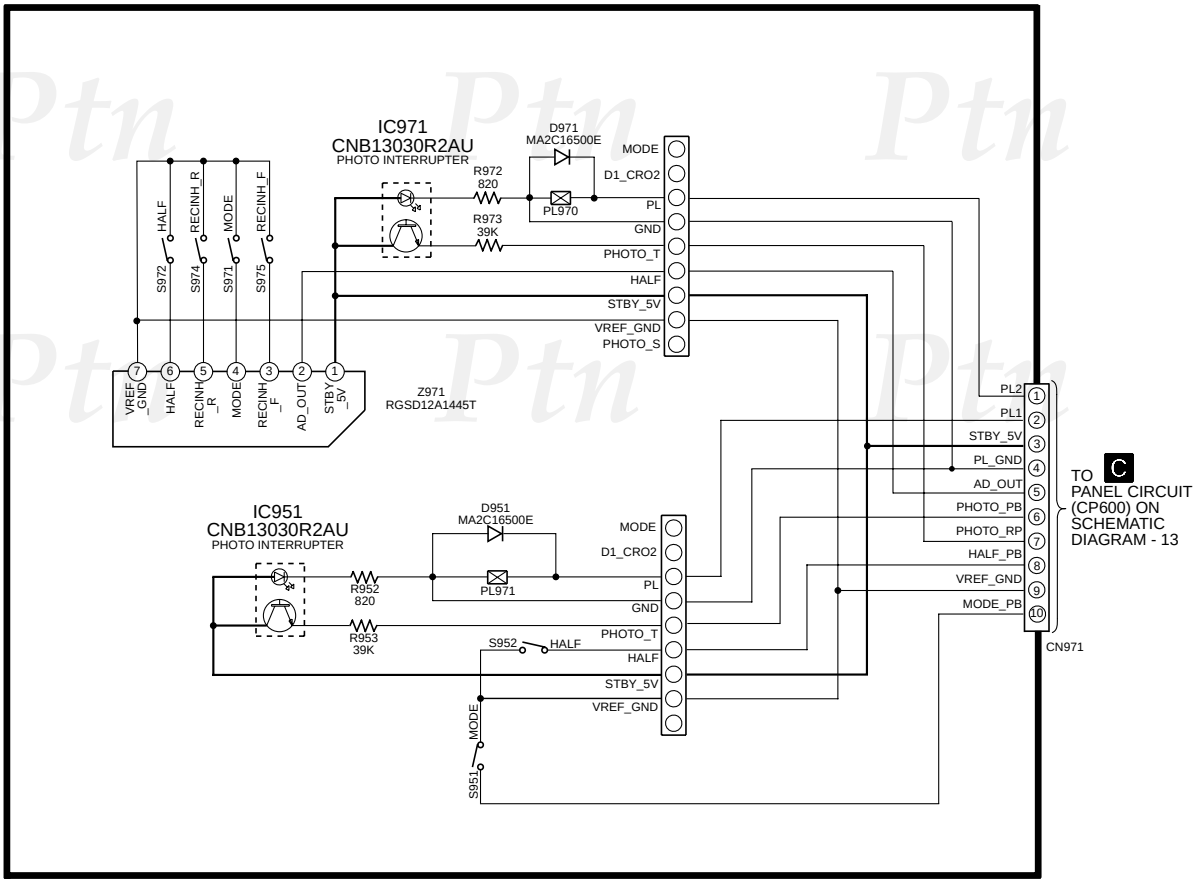

18.6. (G) Power Circuit

SCHEMATIC DIAGRAM - 16

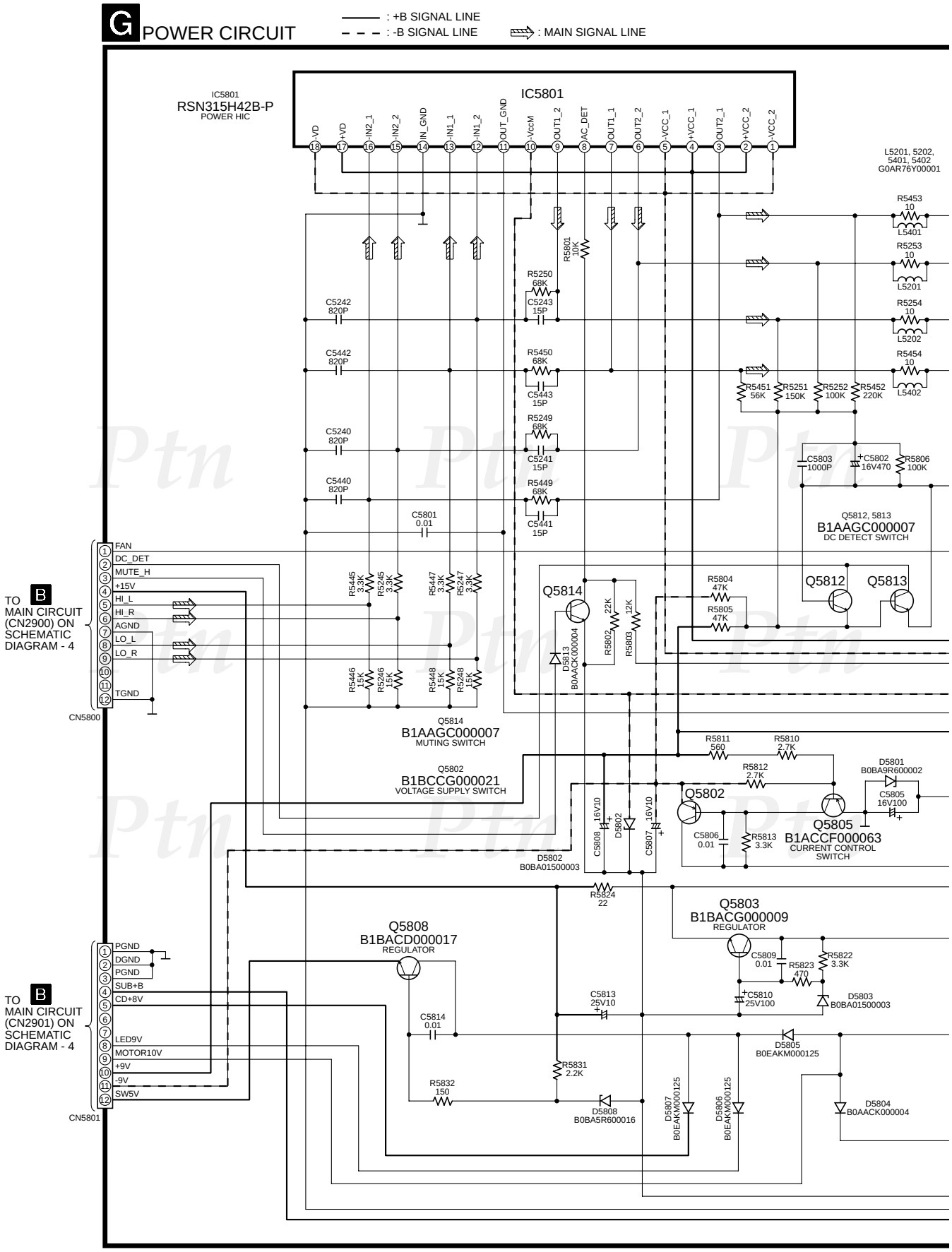

SCHEMATIC DIAGRAM - 17

G POWER CIRCUIT

——— : +B SIGNAL LINE
– – – : -B SIGNAL LINE
⇨ : MAIN SIGNAL LINE

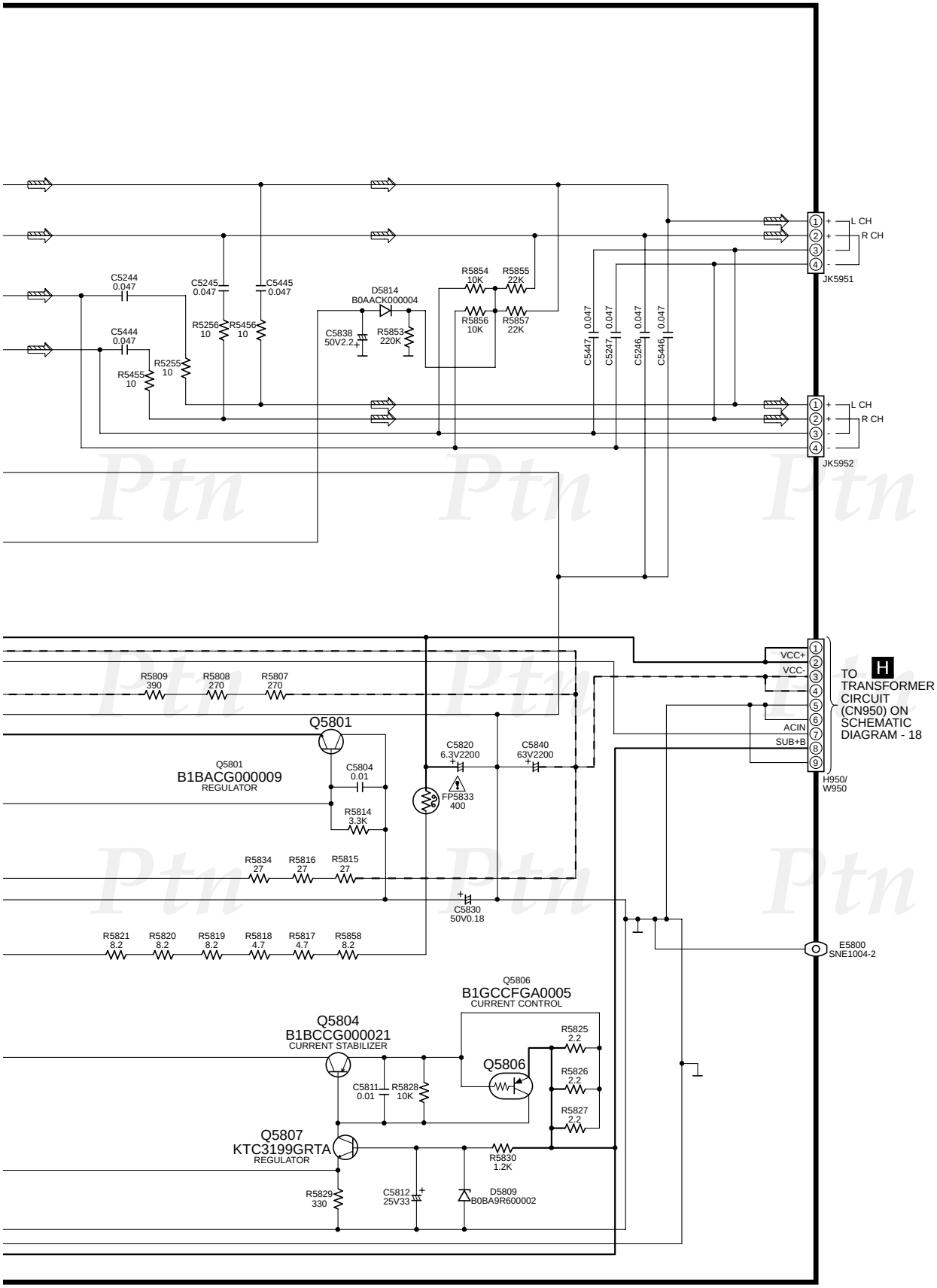

18.7. (H) Transformer Circuit, (I) Voltage Selector Circuit, (J) CD Detect circuit, (K) Spindle Position Circuit & (L) CD Loading Circuit

SCHEMATIC DIAGRAM - 18

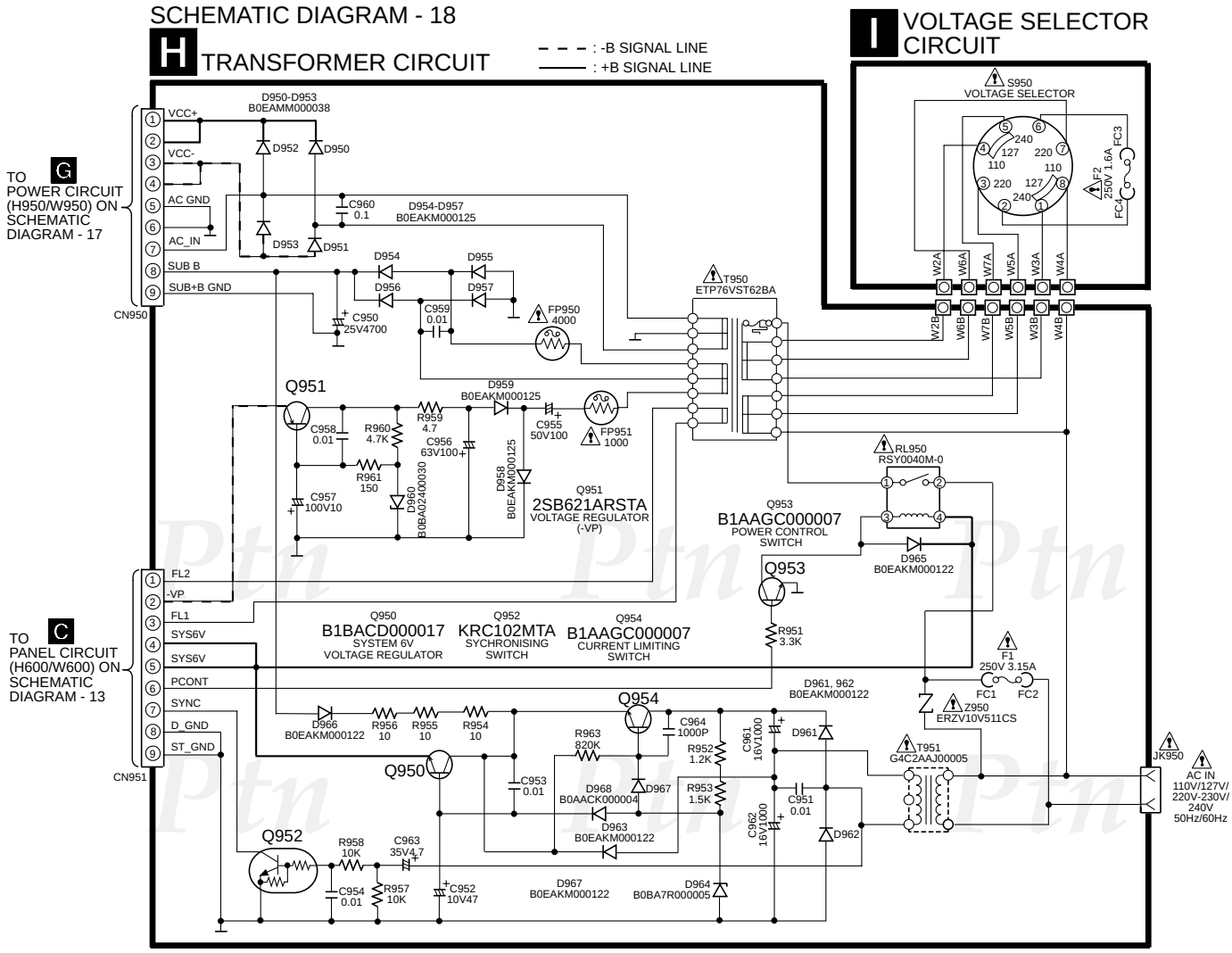

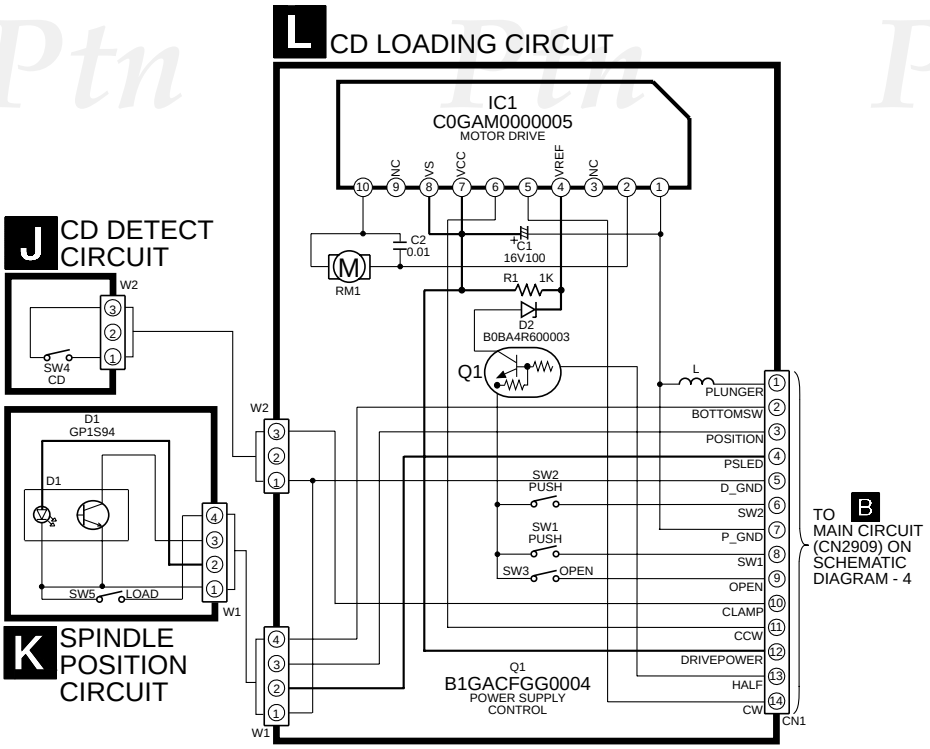

18.8. (M) VCD Module Circuit

SCHEMATIC DIAGRAM - 19

M VCD MODULE CIRCUIT

——— : +B SIGNAL LINE

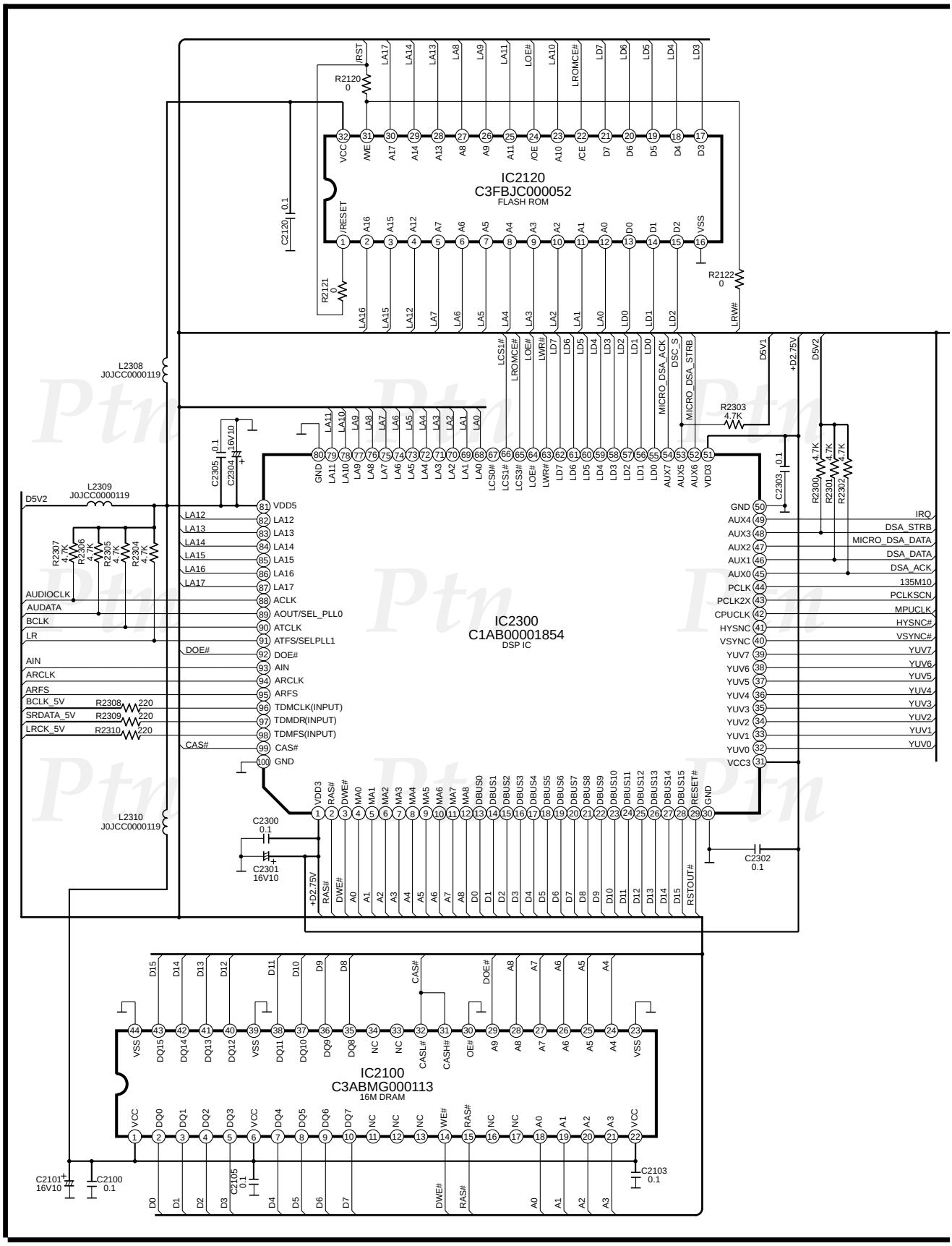

SCHEMATIC DIAGRAM - 20

M VCD MODULE CIRCUIT

: +B SIGNAL LINE

: VCD AUDIO SIGNAL LINE

: VCD VIDEO SIGNAL LINE

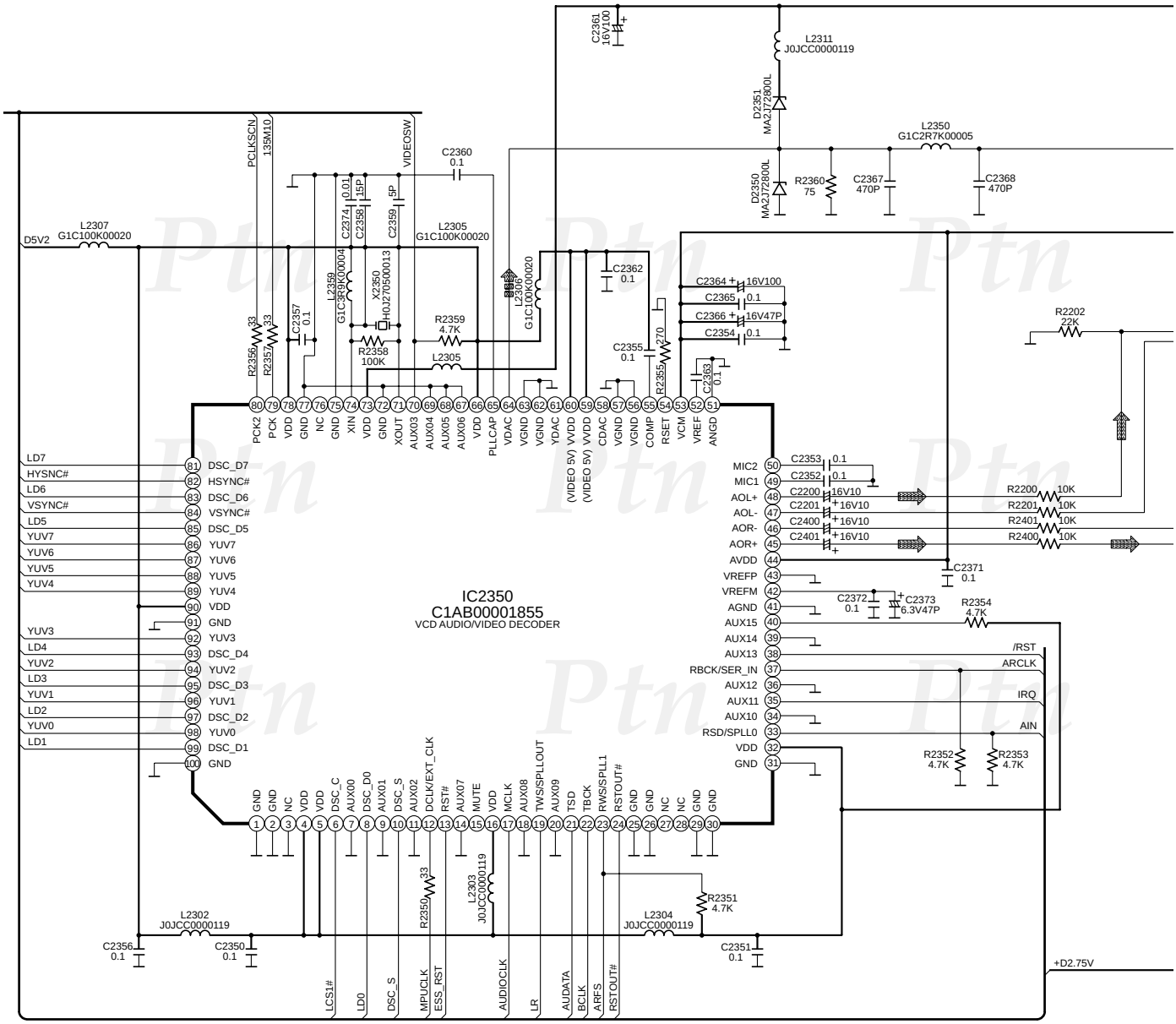

SCHEMATIC DIAGRAM - 21

M VCD MODULE CIRCUIT
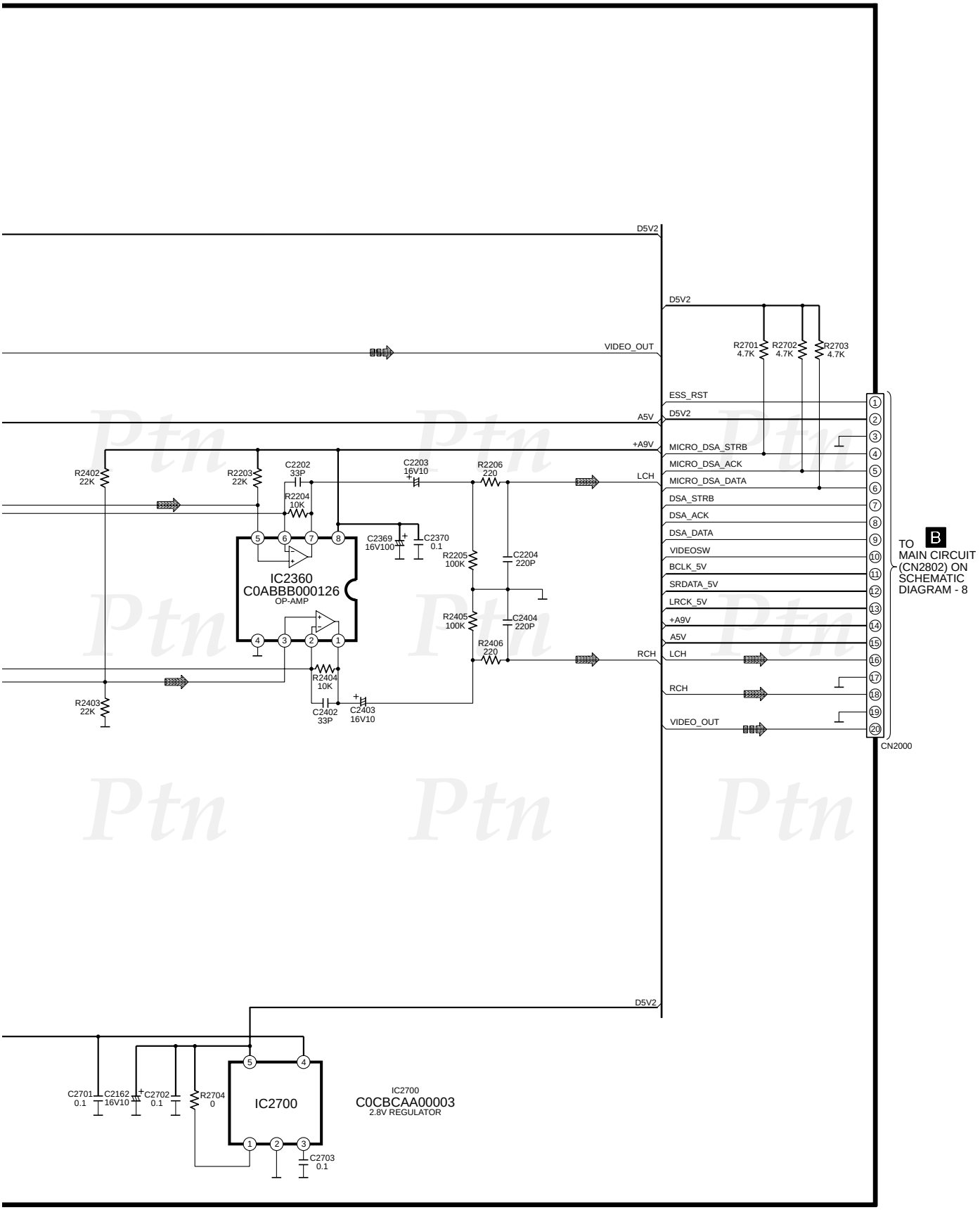
: +B SIGNAL LINE
: VCD AUDIO SIGNAL LINE
: VCD VIDEO SIGNAL LINE