ORDER NO. MD0707004CE

Service Manual

DVD Stereo System

SA-VK660GC
SA-VK660GS
SA-VK660GCS
SA-VK660GCT

Colour

(K)... Black Type

Remote Control SB-PF660 SA-VK660 SB-PF660 SB-WVK660

Notes: This model's DVD/CD mechanism changer unit is CRS1D. Please refer to the original service manual (Order No. MD0603065A3) for this mechanism.

Specifications

■ AMPLIFIER SECTION

RMS Output Power Stereo mode:	
Front Channel	
	115 W per channel (3 Ω), 1 kHz, 10% THD
Subwoofer Channel	
	115 W per channel (3 Ω), 1 kHz, 10% THD
Total RMS Stereo mode power	345 W
PMPO output power	3700 W

■ FM/AM TUNER, TERMINALS SECTION

Preset station	FM 20 stations
	AM 15 stations
Frequency Modulation (FM)	
Frequency range	87.50 to 108.00 MHz (50 kHz step)
Sensitivity	2.5 µV (IHF)
S/N 26dB	1.3 µV
Antenna terminals	75 Ω (unbalanced)
Amplitude Modulation (AM)	
Frequency range	522 to 1629 kHz (9 kHz step)
	520 to 1630 kHz (10 kHz step)
AM Sensitivity S/N 20dB at 999 kHz	
	505 µV/m
Digital audio output	
Coaxial digital output	Pin jack
Music Port Input Jack	
Sensitivity	100 mV, 4.7 kΩ
Terminal	Stereo, 3.5 mm jack
Phone jack	
Terminal	Stereo, 3.5 mm jack
Mic jack	
Sensitivity	0.7 mV, 600 Ω
Terminal	Mono, 6.3 mm jack (2 system)
Aux	
Sensitivity	2V, 8KΩ
Terminal	Stereo, RCA jack

■ CASSETTE DECK SECTION

Type	1 way, Auto reverse
Track system	4 Track, 2 Channel
Heads	
Record/playback	Solid permalloy head
Erasure	Double gap ferrite head
Motor	DC servo motor
Recording system	AC bias 100 kHz
Erasing system	AC erase 100 kHz
Tape speed	4.8 cm/s
Overall frequency response (+3, -6 dB) at DECK OUT	
Normal	35 Hz to 14 kHz
S/N ratio	50 dB (A-Weighted)
Wow and flutter	0.18 % (WRMS)
Fast forward and rewind time	Approx. 120 seconds with

Panasonic®

© 2007 Matsushita Electric Industrial Co. Ltd.. All rights reserved. Unauthorized copying and distribution is a violation of law.

C-60 cassette tape

■ **VIDEO SECTION**

Video system PAL625/50, PAL525/60, NTSC

Composite video output

Output level 1 Vp-p (75 Ω)

Terminal Pin jack (1 system)

Component video output

[NTSC : 480p/480i, PAL : 576p/576i]

Y output level 1 Vp-p (75 Ω)

P_B output level 0.7 Vp-p (75 Ω)

P_R output level 0.7 Vp-p (75 Ω)

Terminal

Pin jack (Y: green, P_B: blue, P_R: red) (1 system)

■ **DISC SECTION**

Disc played [8 cm or 12 cm]

(1) DVD (DVD-Video, DivX[*6,*7])

(2) DVD-RAM (DVD-VR, JPEG[*4,*7], MP3[*2,*7], MPEG4[*5,*7], DivX[*6,*7])

(3) DVD-R (DVD-Video, DVD-VR, JPEG[*4,*7], MP3[*2,*7], MPEG4[*5,*7], DivX[*6,*7])

(4) DVD-R DL (DVD-Video, DVD-VR)

(5) DVD-RW (DVD-Video, DVD-VR, JPEG[*4,*7], MP3[*2,*7], MPEG4[*5,*7], DivX[*6,*7])

(6) +R/ +RW (Video)

(7) +R DL (Video)

(8) CD,CD-R/RW [CD-DA, Video CD, SVCD[*1], MP3[*2,*7], WMA[*3,*7], JPEG[*4,*7], MPEG4[*5,*7], DivX[*6,*7], HighMAT Level 2 (Audio and Image)]

[*1] Conforming to IEC62107

[*2] MPEG-1 Layer 3, MPEG-2 Layer 3

[*3] Windows Media Audio Ver 9.0 L3

Not compatible with Multiple Bit Rate (MBR)

[*4] Exif Ver 2.1 JPEG Baseline files

Picture resolution: between 160 x 120 and 6144 x 4096 pixels (Sub sampling is 4:0:0, 4:2:0, 4:2:2 or 4:4:4). Extremely long and narrow pictures may not be displayed.

[*5] MPEG4 data recorded with the Panasonic SD multi cameras or DVD video recorders. Conforming to SD VIDEO specifications (ASF standard)/ MPEG4 (Simple Profile) video system/ G.726 audio system.

[*6] Plays all versions of DivX® video (including DivX®6) with standard playback of DivX® media files. Certified to the DixV® Home Theater Profile. GMC (Global Motion Compensation) is not supported.

[*7] The total combined maximum number of recognizable audio, picture and video contents and groups: 4000 audio, picture and video contents and 400 groups.

Pick up

Wavelength

CD 785 nm

DVD 662 nm

Laser Power

CD CLASS 1M

DVD CLASS 1

Audio output (Disc)

Number of channels (FL, FR) 2 channel

■ **GENERAL**

Power supply

For GC only AC 220 V to 240 V, 50/60 Hz

For GS/GCS/GCT only

AC 110 V to 127 V/220 V to 240 V, 50/60 Hz

Power consumption 125 W

Power consumption in standby mode:

0.9 W (approx.)

Dimensions (W x H x D) 250 mm x 330 mm x 333.6 mm

Mass 7.5 kg

Operating temperature range +5°C to +35°C

Operating humidity range 5% to 90% RH (no condensation)

■ **SYSTEM**

SC-VK660(GC)	Music Center: SA-VK660 (GC)
	Speaker: SB-PF660 (GC)
	Subwoofer: SB-WVK660 (GC)
SC-VK660(GS)	Music Center: SA-VK660 (GS)
	Speaker: SB-PF660 (GC)
	Subwoofer: SB-WVK660 (GC)
SC-VK660(GCS)	Music Center: SA-VK660 (GCS)
	Speaker: SB-PF660 (GC)
	Subwoofer: SB-WVK660 (GC)
SC-VK660(GCT)	Music Center: SA-VK660 (GCT)
	Speaker: SB-PF660 (GC)
	Subwoofer: SB-WVK660 (GC)

For information on speaker system, please refer to the original Service Manual (Order No. MD0707005CE) for SB-PF660GC-K and Service Manual (Order No. MD0707006CE) for SB-WVK660GC-K.

Notes:

1. Specifications are subject to changes without notice. Mass and dimensions are approximate.
2. Total harmonic distortion is measured by the digital spectrum analyzer.

Manufactured under license from Dolby Laboratories. Dolby, Pro Logic and the double-D symbol are trademarks of Dolby Laboratories.

"DTS" and "DTS 2.0 + Digital Out" are registered trademarks of DTS, Inc.

This product incorporates copyright protection technology that is protected by method claims of certain U.S. patents and other intellectual property rights owned by Macrovision Corporation and other rights owners. Use of this copyright protection technology must be authorized by Macrovision Corporation, and is intended for home and other limited viewing uses only unless otherwise authorized by Macrovision Corporation. Reverse engineering or disassembly is prohibited.

Windows Media, and the Windows logo are trademarks, or registered trademarks of Microsoft Corporation in the United States and/or other countries.

This product is protected by certain intellectual property rights of Microsoft Corporation and third parties. Use or distribution of such technology outside of this product is prohibited without a license from Microsoft or an authorized Microsoft subsidiary and third parties.

WMA is a compression format developed by Microsoft Corporation. It achieves the same sound quality as MP3 with a file size that is smaller than that of MP3.

HIGH M·A·T AUDIO·IMAGE

HighMAT™ and the HighMAT logo are either trademarks or registered trademarks of Microsoft Corporation in the United States and/or other countries.

This product is licensed under the MPEG-4 Visual patent portfolio license for the personal and non-commercial use of a consumer for (i) encoding video in compliance with the MPEG-4 Visual Standard ("MPEG-4 Video") and/or (ii) decoding MPEG-4 Video that was encoded by a consumer engaged in a personal and non-commercial activity and/or was obtained from a video provider licensed by MPEG LA to provide MPEG-4 Video. No license is granted or shall be implied for any other use. Additional information including that relating to promotional, internal and commercial uses and licensing may be obtained from MPEG LA, LLC. See http://www.mpegla.com.

Official DivX® Certified product.

Plays all versions of DivX® video (including DivX®6) with standard playback of DivX® media files.

DivX, DivX Certified, and associated logos are trademarks of DivX, Inc. and are used under license.

DIVX®

⚠ WARNING

This service information is designed for experienced repair technicians only and is not designed for use by the general public.
It does not contain warnings or cautions to advise non-technical individuals of potential dangers in attempting to service a product.
Products powered by electricity should be serviced or repaired only by experienced professional technicians. Any attempt to service or repair the product or products dealt with in this service information by anyone else could result in serious injury or death.

CONTENTS

Page

1 Safety Precautions ---------- 6

1.1. General Guidelines ---------- 6

1.2. Safety Precaution for AC Power Supply Cord (For GS only) ---------- 7

1.3. Before Use (For GS/GCS/GCT only) ---------- 7

1.4. Before Repair and Adjustment ---- 7
1.5. Protection Circuitry ---- 7
1.6. Safety Parts Information ---- 8
2 Prevention of Electrostatic Discharge (ESD) to Electrostatically Sensitive (ES) Devices ---- 8
3 Precaution of Laser Diode ---- 9
4 About Lead-Free Solder (PbF) ---- 10
4.1. Service caution based on legal restrictions ---- 10
5 Handling Precautions for Traverse Unit ---- 11
5.1. Handling Optical Pickup ---- 11
5.2. Replacing Precautions for Optical Pickup Unit ---- 11
5.3. Grounding for Preventing Electrostatic Destruction ---- 11
6 Accessories ---- 12
7 Operation Procedures ---- 13
7.1. Main Unit Operation Control ---- 13
7.2. Remote Control Operation Control ---- 14
7.3. Disc Information ---- 15
7.4. DivX VOD Content ---- 17
8 DVD/CD Mechanism Changer Unit ---- 18
8.1. CRS1D Mechanism Overview ---- 18
8.2. Music Port ---- 21
9 Self diagnosis and special mode setting ---- 22
9.1. Service Mode Summary Table ---- 22
9.2. Service Mode Table ---- 22
9.3. Optical Pick-up Breakdown Diagnosis ---- 32
9.4. DVD Self-Diagnostic Function Error Code ---- 34
9.5. Sales Demostration Lock Function ---- 40
9.6. Service Precautions ---- 40
10 Assembling and Disassembling ---- 42
10.1. Caution ---- 42
10.2. Disassembly flow chart ---- 44
10.3. Main Parts Location ---- 45
10.4. Disassembly of Top Cabinet ---- 45
10.5. Disassembly of DVD/CD Mechanism Changer Unit ---- 46
10.6. Disassembly of Rear Panel ---- 47
10.7. Disassembly of Main P.C.B. ---- 47
10.8. Disassembly of SMPS P.C.B. ---- 48
10.9. Disassembly of D-Amp P.C.B. ---- 48
10.10. Disassembly of Front Panel Unit ---- 49
10.11. Disassembly for Mic P.C.B. ---- 50
10.12. Disassembly for Panel P.C.B. ---- 50
10.13. Disassembly of Tact Switch P.C.B. ---- 51
10.14. Disassembly of Deck mechanism unit ---- 52
10.15. Disassembly of Deck P.C.B. ---- 52
10.16. Disassembly for Deck Mechanism ---- 52
10.17. Disassembly of Traverse Unit ---- 55
10.18. Disassembly of DVD Module P.C.B. ---- 57
10.19. Disassembly of Deck Mechanism P.C.B. ---- 57
10.20. Replacement for cassette lid ---- 57
10.21. Rectification for tape jam problem ---- 57
11 Service Positions ---- 59
11.1. Checking and Repairing of Main P.C.B. ---- 59
11.2. Checking and Repairing of SMPS P.C.B. ---- 59
11.3. Checking and Repairing of Panel P.C.B. ---- 60
11.4. Checking and Repairing of D-Amp P.C.B., Deck P.C.B. & Deck Mechanism P.C.B. ---- 61
12 Adjustment Procedures ---- 62
12.1. Cassette Deck Section ---- 62
12.2. Tuner Section ---- 63
12.3. Alignment Points ---- 64
13 Illustration of ICs, Transistors and Diodes ---- 65
14 Voltage and Waveform Chart ---- 66
14.1. DVD Module P.C.B. ---- 66
14.2. Main P.C.B. ---- 67
14.3. Panel P.C.B. ---- 68
14.4. Damp P.C.B. & SMPS P.C.B. ---- 68
14.5. Deck P.C.B., Deck Mechanism P.C.B. & Mic P.C.B. ---- 69
14.6. Waveform Chart ---- 70
15 Wiring Connection Diagram ---- 71
16 Block Diagram ---- 73
16.1. System Control Block Diagram ---- 73
16.2. DVD Servo/ Video Block Diagram ---- 74
16.3. Audio Block Diagram ---- 75
16.4. Digital Amp Block Diagram ---- 76
16.5. Deck Block Diagram ---- 77
16.6. SMPS Block Diagram ---- 78
17 Schematic Diagram Notes ---- 79
18 Schematic Diagram ---- 81
18.1. (A) DVD Module Circuit ---- 81
18.2. (B) Main Circuit ---- 85
18.3. (C) Panel Circuit ---- 89
18.4. (D) Tact Switch Circuit,(E) Mic Circuit & (G) Deck Mechanism Circuit ---- 91
18.5. (F) Deck Circuit ---- 92
18.6. (H) D-Amp Circuit ---- 93
18.7. (I) SMPS Circuit ---- 95
18.8. Optical Pickup Unit Circuit ---- 97
19 Printed Circuit Board ---- 99
19.1. (A) DVD Module P.C.B. (Side A & B) ---- 100
19.2. (B) Main P.C.B. ---- 101
19.3. (C) Panel P.C.B. ---- 102
19.4. (D) Tact Switch P.C.B., (E) Mic P.C.B., (F) Deck P.C.B. & (G) Deck Mechanism P.C.B. ---- 103
19.5. (H) D-Amp P.C.B. ---- 104
19.6. (I) SMPS P.C.B. (For GC Only) ---- 105
19.7. (I) SMPS P.C.B. (For GCS/GS/GCT Only) ---- 106
20 Basic Troubleshooting Guide for Backend Module ---- 107
20.1. Initialisation and Playability ---- 107
21 Terminal Function of IC ---- 108
21.1. IC2801 (C2CBYY000468) System Microprocessor ---- 108
21.2. IC6601 (C0HBB0000057) FL Driver IC ---- 109
22 Exploded Views ---- 111
22.1. Cabinet Parts Location ---- 111
22.2. Deck Mechanism Unit Parts Location (RAA4901-S) ---- 113
22.3. Packaging ---- 114

23 Replacement Parts List ---------- **115**
23.1. Component Parts List ---------- 116
24 Schematic Diagram for printing with letter size ---------- **129**

1 Safety Precautions

1.1. General Guidelines

1. When servicing, observe the original lead dress. If a short circuit is found, replace all parts which have been overheated or damaged by the short circuit.
2. After servicing, see to it that all the protective devices such as insulation barriers, insulation papers shields are properly installed.
3. After servicing, make the following leakage current checks to prevent the customer from being exposed to shock hazards.

1.1.1. Leakage Current Cold Check

1. Unplug the AC cord and connect a jumper between the two prongs on the plug.
2. Measure the resistance value, with an ohmmeter, between the jumpered AC plug and each exposed metallic cabinet part on the equipment such as screwheads, connectors, control shafts, etc. When the exposed metallic part has a return path to the chassis, the reading should be between 1MΩ and 5.2MΩ.

   When the exposed metal does not have a return path to the chassis, the reading must be ∞ .

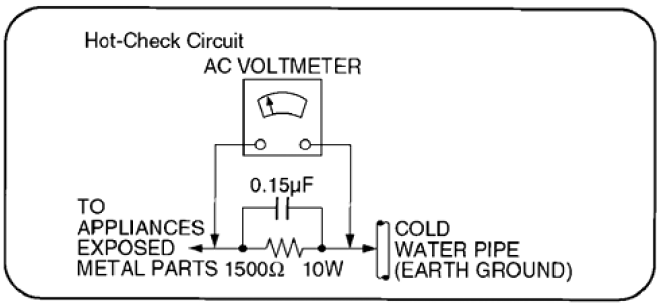

Figure 1

1.1.2. Leakage Current Hot Check

1. Plug the AC cord directly into the AC outlet. Do not use an isolation transformer for this check.
2. Connect a 1.5kΩ, 10 watts resistor, in parallel with a 0.15μF capacitor, between each exposed metallic part on the set and a good earth ground such as a water pipe, as shown in Figure 1.
3. Use an AC voltmeter, with 1000 ohms/volt or more sensitivity, to measure the potential across the resistor.
4. Check each exposed metallic part, and measure the voltage at each point.
5. Reverse the AC plug in the AC outlet and repeat each of the above measurements.
6. The potential at any point should not exceed 0.75 volts RMS. A leakage current tester (Simpson Model 229 or equivalent) may be used to make the hot checks, leakage current must not exceed 1/2 milliamp. In case a measurement is out of the limits specified, there is a possibility of a shock hazard, and the equipment should be repaired and rechecked before it is returned to the customer.

1.2. Safety Precaution for AC Power Supply Cord (For GS only)

Note on AC power supply cord (For Saudi Arabia and Kuwait only)

Before use
Remove the connector cover.

How to replace the fuse
The location of the fuse differ according to the type of AC mains plug (figures A and B). Confirm the AC mains plug fitted and follow the instructions below.
Illustrations may differ from actual AC mains plug.

1. Open the fuse cover with a screwdriver.

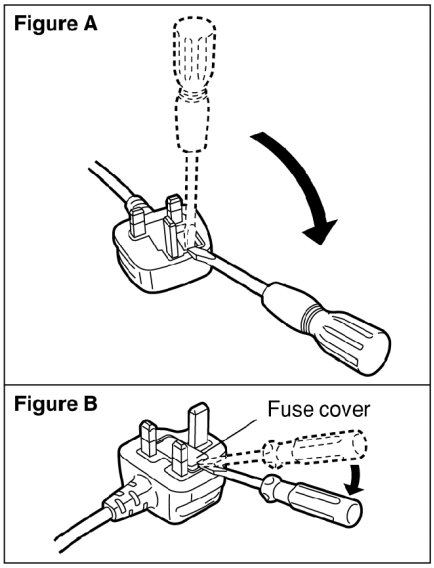

2. Replace the fuse and close or attach the fuse cover.

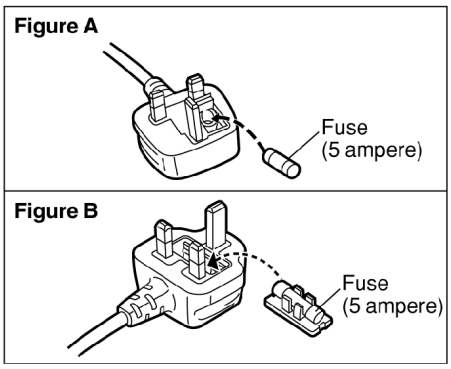

1.3. Before Use (For GS/GCS/GCT only)

Be sure to disconnect the mains cord before adjusting the voltage selector.

Use a minus(-) screwdriver to set the voltage selector (on the rear panel) to the voltage setting for the area in which the unit will be used. (If the power supply in your area is 117V or 120V, set to the “117V or 120V” position.)

Note that this unit will be seriously damaged if this setting is not made correctly. (There is no voltage selector for some countries, the correct voltage is already set.)

1.4. Before Repair and Adjustment

Disconnect AC power, discharge Power Supply Capacitors C2550, C2556, C5101, C5104, C5165, C5166, C5171, C5172, C5950 and C5966 through a 10Ω, 1W resistor to ground.

DO NOT SHORT-CIRCUIT DIRECTLY (with a screwdriver blade, for instance), as this may destroy solid state devices.

After repairs are completed, restore power gradually using a variac, to avoid overcurrent.

Current consumption at AC 220~240V, 50/60 Hz in NO SIGNAL (vol. min, at CD mode) should be ~250mA . [For GC only]

Current consumption at AC 110~127V, 50/60 Hz & AC 220~240V, 50/60Hz in NO SIGNAL (vol. min, at CD mode) should be ~400mA and ~250mA respectively. [For GCS/GS/GCT only]

1.5. Protection Circuitry

The protection circuitry may have operated if either of the following conditions are noticed:

- No sound is heard when the power is turned on.
- Sound stops during a performance.

The function of this circuitry is to prevent circuitry damage if, for example, the positive and negative speaker connection wires are “shorted”, or if speaker systems with an impedance less than the indicated rated impedance of the amplifier are used.

If this occurs, follow the procedure outlines below:

1. Turn off the power.
2. Determine the cause of the problem and correct it.
3. Turn on the power once again after one minute.

Note :

When the protection circuitry functions, the unit will not operate unless the power is first turned off and then on again.

1.6. Safety Parts Information

Safety Parts List:

There are special components used in this equipment which are important for safety.

These parts are marked by ⚠ in the Schematic Diagrams & Replacement Parts List. It is essential that these critical parts should be replaced with manufacturer's specified parts to prevent shock, fire or other hazards. Do not modify the original design without permission of manufacturer.

Table 1

Reference No.	Part No.	Part name & Description	Remarks
360	RAE2023Z-S	TRAVERSE UNIT	⚠
S5950	K0ABLB000003	SW VOLTAGE SELECTOR	GS/GCS/GCT ⚠
L5950	ELF15N035AN	LINE FILTER	⚠
T5950	G4CYBYY00013	MAIN TRANSFORMER	⚠
T5951	G4C2AAJ00005	SUB TRANSFORMER	⚠
Z5950	ERZV10V511CS	ZENER	⚠
RL5950	K6B1AEA00015	POWER RELAY	⚠
F1	K5D122BLA014	FUSE	GC ⚠
F1	K5D252BLA013	FUSE	GS/GCS/GCT ⚠
F2	K5D122BLA014	FUSE	GS/GCS/GCT ⚠
FP5100	K5G401A00008	FUSE PROTECTOR	⚠
FP5950	K5G402A00025	FUSE PROTECTOR	⚠
JK5950	K2AA2B000011	JK AC INLET	⚠
A2	K2CQ2CA00007	AC CORD	GC/GCS/GS ⚠
A2	K2CT3CA00004	AC CORD	GS ⚠
A2	K2CP2YY00001	AC CORD	GCT ⚠

2 Prevention of Electrostatic Discharge (ESD) to Electrostatically Sensitive (ES) Devices

Some semiconductor (solid state) devices can be damaged easily by electricity. Such components commonly are called Electrostatically Sensitive (ES) Devices. Examples of typical ES devices are integrated circuits and some field-effect transistors and semiconductor "chip" components. The following techniques should be used to help reduce the incidence of component damage caused by electrostatic discharge (ESD).

1. Immediately before handling any semiconductor component or semiconductor-equipped assembly, drain off any ESD on your body by touching a known earth ground. Alternatively, obtain and wear a commercially available discharging ESD wrist strap, which should be removed for potential shock reasons prior to applying power to the unit under test.
2. After removing an electrical assembly equipped with ES devices, place the assembly on a conductive surface such as aluminium foil, to prevent electrostatic charge build up or exposure of the assembly.
3. Use only a grounded-tip soldering iron to solder or unsolder ES devices.
4. Use only an anti-static solder remover device. Some solder removal devices not classified as "anti-static (ESD protected)" can generate electrical charge to damage ES devices.
5. Do not use freon-propelled chemicals. These can generate electrical charges sufficient to damage ES devices.
6. Do not remove a replacement ES device from its protective package until immediately before you are ready to install it. (Most replacement ES devices are packaged with leads electrically shorted together by conductive foam, aluminium foil or comparable conductive material).
7. Immediately before removing the protective material from the leads of a replacement ES device, touch the protective material to the chassis or circuit assembly into which the device will be installed.

   Caution

   Be sure no power is applied to the chassis or circuit, and observe all other safety precautions.
8. Minimize body motions when handling unpackaged replacement ES devices. (Otherwise harmless motion such as the brushing together of your clothes fabric or the lifting of your foot from a carpeted floor can generate static electricity (ESD) sufficient to damage an ES device).

3 Precaution of Laser Diode

Caution :

This product utilizes a laser diode with the unit turned "ON", invisible laser radiation is emitted from the pick-up lens.
Wavelength : 785 nm(CD)/662 nm(DVD)
Maximum output radiation power from pick up : 100 µW/VDE

Laser radiation from pick up unit is safety level, but be sure the followings:

1. Do not disassemble the optical pick up unit, since radiation from exposed laser diode is dangerous.
2. Do not adjust the variable resistor on the pick up unit. It was already adjusted.
3. Do not look at the focus lens using optical instruments.
4. Recommend not to look at pick-up lens for a long time.

CAUTION!
THIS PRODUCT UTILIZES A LASER.
USE OF CONTROLS OR ADJUSTMENTS OR PERFORMANCE OF PROCEDURES OTHER THAN THOSE SPECIFIED HEREIN MAY RESULT IN HAZARDOUS RADIATION EXPOSURE.

■ Use of Caution Labels

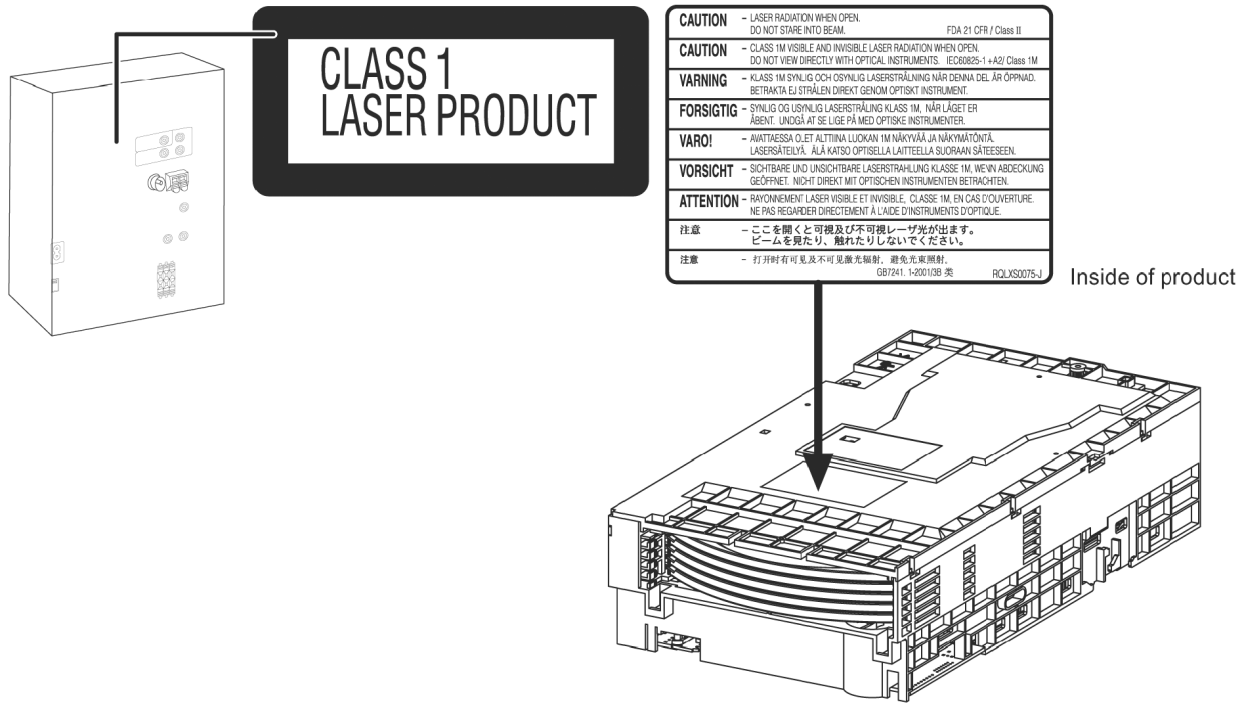

4 About Lead-Free Solder (PbF)

4.1. Service caution based on legal restrictions

4.1.1. General description about Lead-Free Solder (PbF)

The lead free solder has been used in the mounting process of all electrical components on the printed circuit boards used for this equipment in considering the globally environmental conservation.

The normal solder is the alloy of tin (Sn) and lead (Pb). On the other hand, the lead free solder is the alloy mainly consists of tin (Sn), silver (Ag) and Copper (Cu), and the melting point of the lead free solder is higher approx.30 degrees C (86°F) more than that of the normal solder.

Definition of PCB Lead Free Solder being used

The letter of “PbF” is printed either foil side or components side on the PCB using the lead free solder. (See right figure)	PbF

Service caution for repair work using Lead Free Solder (PbF)

- The lead free solder has to be used when repairing the equipment for which the lead free solder is used.
  (Definition: The letter of “PbF” is printed on the PCB using the lead free solder.)
- To put lead free solder, it should be well molten and mixed with the original lead free solder.
- Remove the remaining lead free solder on the PCB cleanly for soldering of the new IC.
- Since the melting point of the lead free solder is higher than that of the normal lead solder, it takes the longer time to melt the lead free solder.
- Use the soldering iron (more than 70W) equipped with the temperature control after setting the temperature at 350±30 degrees C (662±86°F).

Recommended Lead Free Solder (Service Parts Route.)

- The following 3 types of lead free solder are available through the service parts route.
  RFKZ03D01K----------(0.3mm 100g Reel)
  RFKZ06D01K----------(0.6mm 100g Reel)
  RFKZ10D01K----------(1.0mm 100g Reel)

Note

* Ingredient: Tin (Sn), 96.5%, Silver (Ag) 3.0%, Copper (Cu) 0.5%, Cobalt (Co) / Germanium (Ge) 0.1 to 0.3%

5 Handling Precautions for Traverse Unit

The laser diode used inside optical pickup could be destroyed due to static electricity as a potential difference is caused by electrostatic load discharged from clothes or human body. Handling the parts carefully to avoid electrostatic destruction during repair.

5.1. Handling Optical Pickup

1. Do not impact on optical pickup as the unit structurally uses an extremely precise technology.
2. Short-circuit the flexible cable of optical pickup remove from the circuit board using a short-circuit pin or clip in order to prevent laser diode from electrostatic destruction (Refer to Fig. 3.1 and Fig. 3.2)
3. Do not handle flexible cables forcibly as this may cause snapping. Handle the parts carefully (Refer to Fig. 3.1)
4. A new optical pickup is equipped with an anti-static flexible cable. After replacing and connecting to the flexible board, cut the anti-static flexible cable. (Refer to Fig. 3.1)

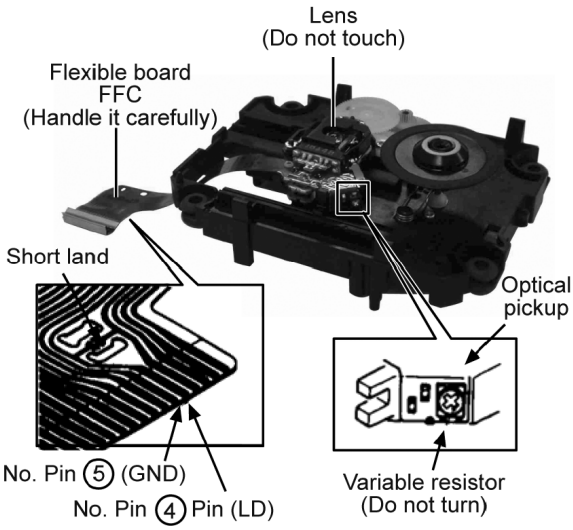

Fig 3.1

5.2. Replacing Precautions for Optical Pickup Unit

Optical Pickup

The optical pickup by which part supply was carried out attaches the short clip to the flexible board for laser diode electrostatic discharge damage prevention. Please remove the short clip and be sure to check that the short land is open, before connecting. (Please remove solder, when the short land short-circuits.)

5.3. Grounding for Preventing Electrostatic Destruction

1. Human body grounding

   Use the anti-static wrist strap to discharge the static electricity accumulated in your body. (Refer to Fig. 3.2)
2. Work place grounding

   Place a conductive material (conductive sheet) or ironboard where optical pickup is placed. (Refer to Fig. 3.2)

Note :

Keep your clothes away from optical pickup as wrist strap does not release the static electricity charged in clothes.

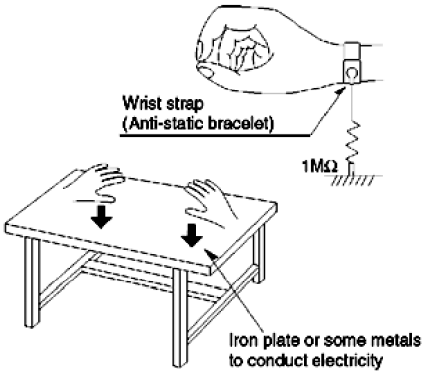

Fig. 3.2

6 Accessories

Remote Control

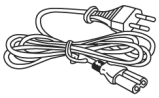

AC Cord

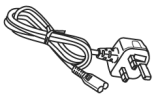

AC Cord (For GS only)

Video Cable

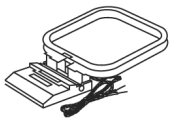

AM Loop Antenna

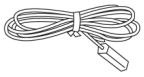

FM Antenna Wire

7 Operation Procedures

7.1. Main Unit Operation Control

Main unit

Refer to the numbers in parentheses for page reference. Buttons such as ❶ function the same as the controls on the remote control.

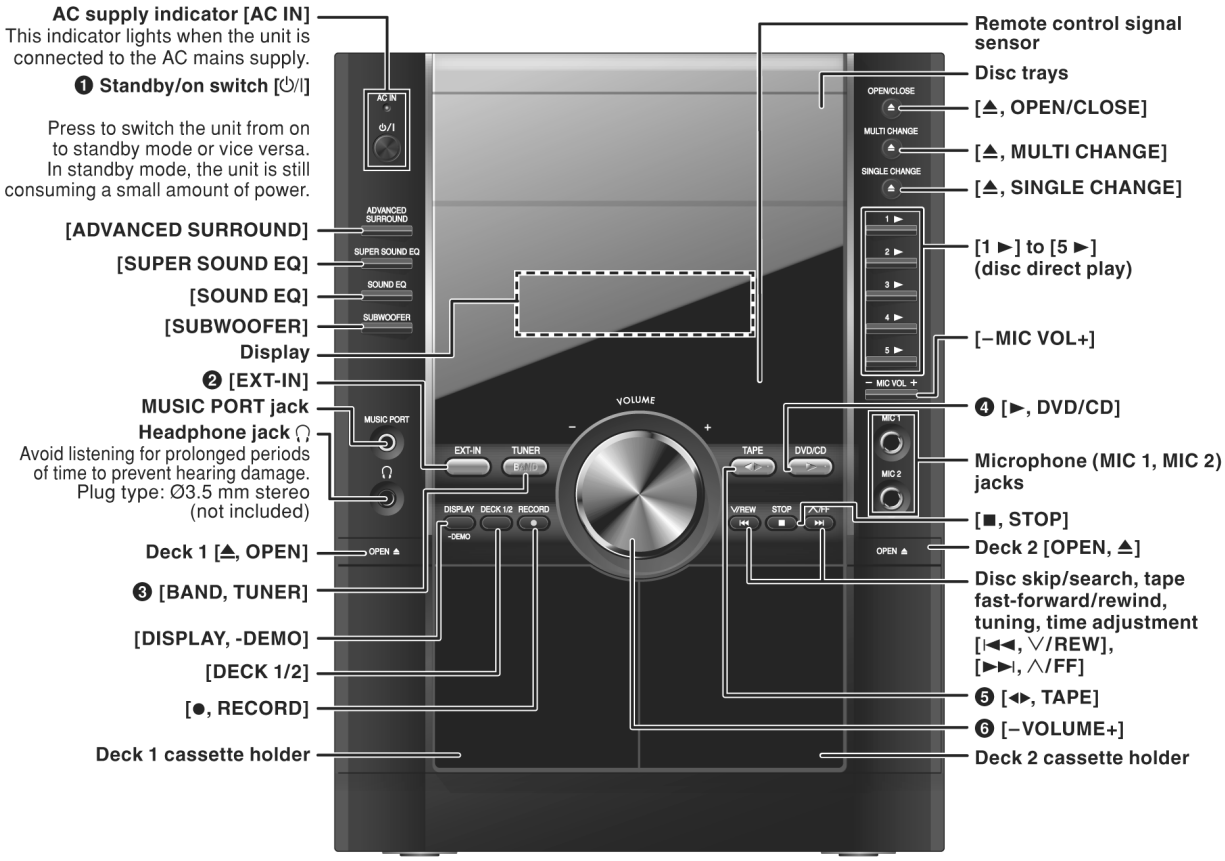

7.2. Remote Control Operation Control

Remote control

Buttons labelled such as ❶ function in exactly the same way as the buttons on the main unit.

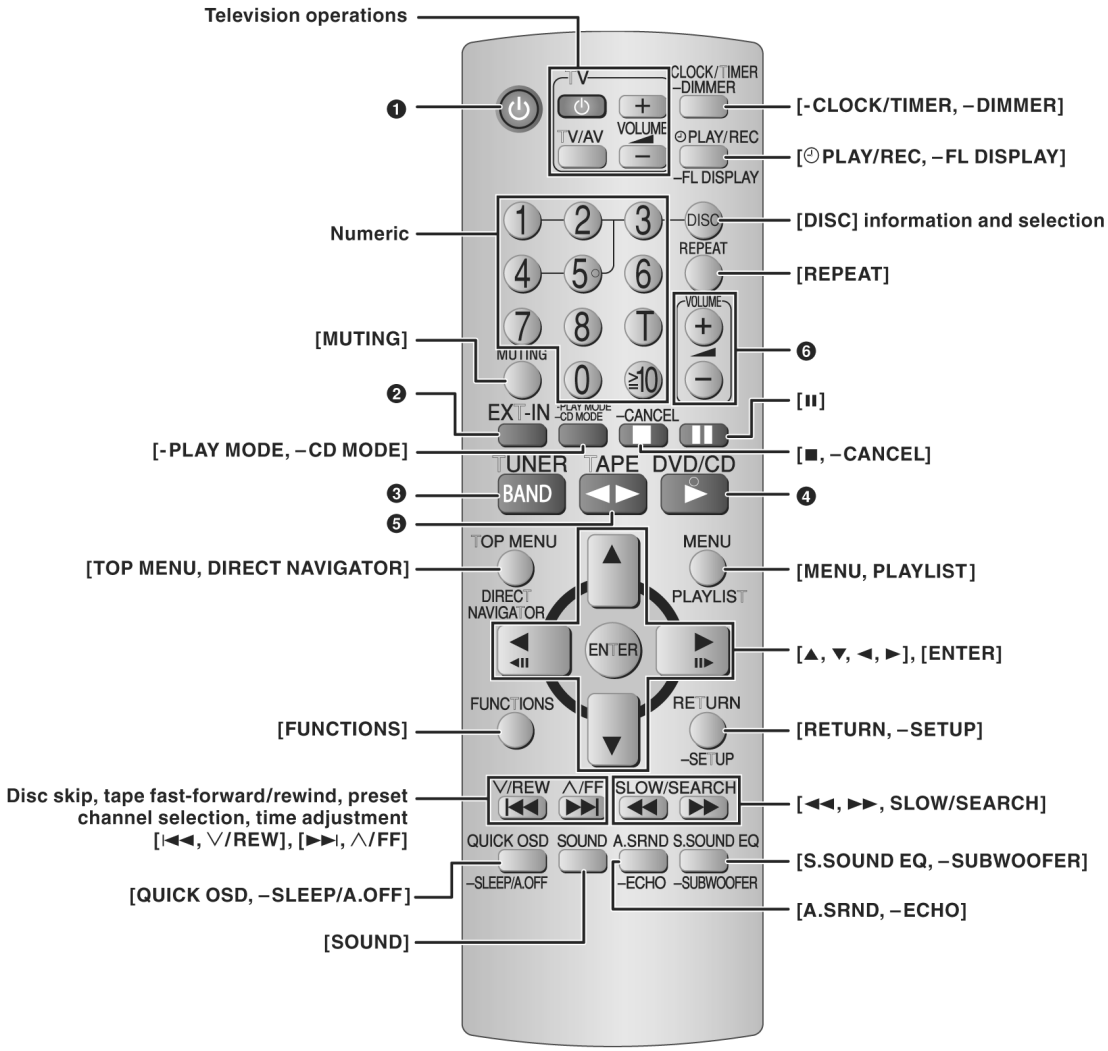

7.3. Disc Information

7.3.1. Disc Playability

Discs that can be played

■ **Commercial discs**

Disc	Logo	Indicated in these instructions by	Remarks
DVD-Video	DVD VIDEO	DVD-V	High quality movie and music discs.
Video CD	COMPACT disc DIGITAL VIDEO / COMPACT disc SUPER VIDEO	VCD	Music discs with video. Including SVCD (Conforming to IEC62107).
CD	COMPACT disc DIGITAL AUDIO / COMPACT disc DIGITAL AUDIO TEXT	CD	Music discs.

■ **Recorded discs** (○: Playable, —: Not playable)

Disc	Logo	Recorded on a DVD video recorder, etc.		Recorded on a personal computer, etc.					Finalizing※6
		DVD-VR※2	DVD-V※4	WMA	MP3	JPEG	MPEG4※8	DivX※9	
DVD-RAM	DVD RAM RAM4.7	○	—	—	○	○	○	○	Not necessary
DVD-R/RW	DVD R R4.7 / DVD R W	○	○	—	○	○	○	○	Necessary
DVD-R DL	DVD R R DL	○※3	○	—	—	—	—	—	Necessary
+R/+RW	—	—	(○)※5	—	—	—	—	—	Necessary
+R DL	—	—	(○)※5	—	—	—	—	—	Necessary
CD-R/RW※1	—	—	—	○	○	○	○	○	Necessary※7

- It may not be possible to play all the above-mentioned discs in some cases due to the type of disc, the condition of the recording, the recording method, or how the files were created (➡ page 21, Tips for making data discs).

※1 This unit can play CD-R/RW recorded with CD-DA or Video CD format.
WMA MP3 JPEG This unit also plays HighMAT discs.
※2 Discs recorded on DVD video recorders or DVD video cameras, etc. using Version 1.1 of the Video Recording Format (a unified video recording standard).
※3 Discs recorded on DVD video recorders or DVD video cameras using Version 1.2 of the Video Recording Format (a unified video recording standard).
※4 Discs recorded on DVD video recorders or DVD video cameras using DVD-Video Format.
※5 Recorded using a format different from DVD-Video Format, therefore, some functions cannot be used.
※6 A process that allows play on compatible equipment. To play a disc that is displayed as "Necessary" on this unit, the disc must first be finalized on the device it was recorded on.
※7 Closing the session will also work.
※8 MPEG4 data recorded with the Panasonic SD multi cameras or DVD video recorders [conforming to SD VIDEO specifications (ASF standard)/MPEG4 (Simple Profile) video system/G.726 audio system].
※9 Functions added with DivX Ultra are not supported.

Note about using a DualDisc
The digital audio content side of a DualDisc does not meet the technical specifications of the Compact Disc Digital Audio (CD-DA) format so playback may not be possible.

■ **Discs that cannot be played**
DVD-RW version 1.0, DVD-Audio, DVD-ROM, CD-ROM, CDV, CD-G, SACD, Photo CD, DVD-RAM that cannot be removed from their cartridge, 2.6 GB and 5.2 GB DVD-RAM, and "Chaoji VCD" available on the market including CVD, DVCD and SVCD that do not conform to IEC62107.

■ **Video systems**
- This unit can play PAL and NTSC, but your television must match the system used on the disc.
- PAL discs cannot be correctly viewed on an NTSC television.
- This unit can convert NTSC signals to PAL 60 for viewing on a PAL television (➡ page 19, "NTSC Disc Output" in "Video" tab).

7.3.2. To Play MP3/WMA and still pictures (JPEG/tiff)

Tips for making data discs

- When there are more than eight groups, the eighth group onwards will be displayed on one vertical line in the menu screen.
- There may be differences in the display order on the menu screen and computer screen.
- This unit cannot play files recorded using packet write.

DVD-RAM
- Discs must conform to UDF 2.0.

DVD-R/RW
- Discs must conform to UDF bridge (UDF 1.02/ISO9660).
- This unit does not support multi-session. Only the default session is played.

CD-R/RW
- Discs must conform to ISO9660 level 1 or 2 (except for extended formats).
- This unit supports multi-session but if there are many sessions it takes more time for play to start. Keep the number of sessions to a minimum to avoid this.

Naming folders and files

Files are treated as contents and folders are treated as groups on this unit.
At the time of recording, prefix folder and file names. This should be with numbers that have an equal number of digits, and should be done in the order you want to play them (this may not work at times). Files must have the extension (➡ see below).

Example: MP3

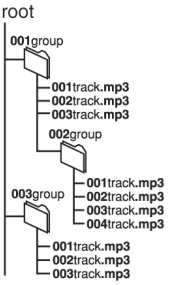

WMA (Extension: ".WMA" or ".wma")
- Compatible compression rate: between 48 kbps and 320 kbps.
- You cannot play WMA files that are copy-protected.
- This unit does not support Multiple Bit Rate (MBR).

MP3 (Extension: ".MP3" or ".mp3")
- Compatible compression rate: between 32 kbps and 320 kbps.
- This unit does not support ID3 tags.
- Compatible sampling rates:
  - DVD-RAM, DVD-R/RW: 11.02, 12, 22.05, 24, 44.1 and 48 kHz
  - CD-R/RW: 8, 11.02, 12, 16, 22.05, 24, 32, 44.1 and 48 kHz

JPEG (Extension: ".JPG", ".jpg", ".JPEG" or ".jpeg")
- JPEG files taken on a digital camera that conform to DCF Standard (Design rule for Camera File system) Version 1.0 are displayed. Files that have been altered, edited or saved with computer picture editing software may not be displayed.
- This unit cannot display moving pictures, MOTION JPEG and other such formats, and still pictures other than JPEG (Example: TIFF), or play pictures with attached audio.

MPEG4 (Extension: ".ASF" or ".asf")
- You can play MPEG4 data [conforming to SD VIDEO specifications (ASF standard)/MPEG4 (Simple Profile) video system/G.726 audio system] recorded with Panasonic SD multi cameras or DVD video recorders with this unit.
- The recording date may differ from that of the actual date.

DivX (Extension: ".DIVX", ".divx", ".AVI" or ".avi")
- You can play all versions of DivX® video (including DivX®6) [DivX video system/MP3, Dolby Digital or MPEG audio system] with standard playback of DivX® media files. Functions added with DivX Ultra are not supported.
- DivX files greater than 2 GB or have no index may not be played properly on this unit.
- This unit supports all resolutions up to maximum of 720 x 480 (NTSC)/720 x 576 (PAL).
- You can select up to eight types of audio and subtitles on this unit.

Disc handling precautions

- Do not attach labels or stickers to discs. This may cause disc warping, rendering it unusable.
- Do not write on the label side with a ball-point pen or other writing instrument.
- Do not use record cleaning sprays, benzine, thinner, static electricity prevention liquids or any other solvent.
- Do not use scratch-proof protectors or covers.
- Do not use the following discs:
  - Discs with exposed adhesive from removed stickers or labels (rented discs, etc).
  - Discs that are badly warped or cracked.
  - Irregularly shaped discs, such as heart shapes.

■ To clean discs
Wipe with a damp cloth and then wipe dry.

7.4. DivX VOD Content

About DivX VOD content

DivX Video-on-Demand (VOD) content is encrypted for copyright protection. In order to play DivX VOD content on this unit, you first need to register the unit.
Follow the online instructions for purchasing DivX VOD content to enter the unit's registration code and register the unit. For more information about DivX VOD, visit www.divx.com/vod.

Display the unit's registration code

(➡ page 19, "DivX Registration" in "Others" tab)

8 alphanumeric characters

- We recommend that you make a note of this code for future reference.
- After playing DivX VOD content for the first time, another registration code is then displayed in "DivX Registration". Do not use this registration code to purchase DivX VOD content. If you use this code to purchase DivX VOD content, and then play the content on this unit, you will no longer be able to play any content that you purchased using the previous code.
- If you purchase DivX VOD content using a registration code different from this unit's code, you will not be able to play this content. ("Authorization Error" is displayed.)

Regarding DivX content that can only be played a set number of times

Some DivX VOD content can only be played a set number of times. When you play this content, the remaining number of plays is displayed. You cannot play this content when the number of remaining plays is zero.
("Rented Movie Expired" or "Rental Expired" is displayed.)

When playing this content

- The number of remaining plays is reduced by one if
  - you press [⏻] or press and hold [–SETUP].
  - you press [■]. [Press [❚❚] (pause) to pause play.]
  - you press [|◀◀, ▶▶|] (skip) or [◀◀, ▶▶] (search) etc. and arrive at another content or the start of the content being played.
- The "Resume" (➡ page 11, Stop) and "Marker" (➡ page 17, Play) functions will not work.

Types of subtitles text file that can be displayed

Subtitles text that satisfy the following conditions can be displayed on this unit.

- File format: MicroDVD, SubRip, or TMPlayer
- File extension: ".SRT", ".srt", ".SUB", ".sub", ".TXT", or ".txt"
- File name: No more than 44 characters excluding the file extension
- The DivX video file and subtitles text file are inside the same folder, and the file names are the same except for the file extensions.
- If there are more than one subtitles text files inside the same folder, they are displayed in the following order of priority: ".srt", ".sub", ".txt".

Limitations of this unit

- In the following situations, the subtitles cannot be displayed as recorded.
- Furthermore, depending on the methods used to create the file or the state of the recording, only parts of the subtitles may be displayed, or the subtitles may not be displayed at all.
  - When special text or characters are included in the subtitles text.
  - When characters with styling specified are included in the subtitle data. Codes that specify the character style within files are displayed as subtitle characters.
  - When data with a different format exists within the subtitle data.
- If the file name of the DivX video file is not displayed correctly on the menu screen (the file name is displayed as "_"), the subtitles text may not be displayed correctly.
- The subtitles text cannot be displayed when search, Time Slip, Time Search and other such operations are being performed.
- The subtitles text cannot be displayed when Quick OSD, On-Screen Menus, Navigation Menu and other such menu screens are being displayed.

8 DVD/CD Mechanism Changer Unit

8.1. CRS1D Mechanism Overview

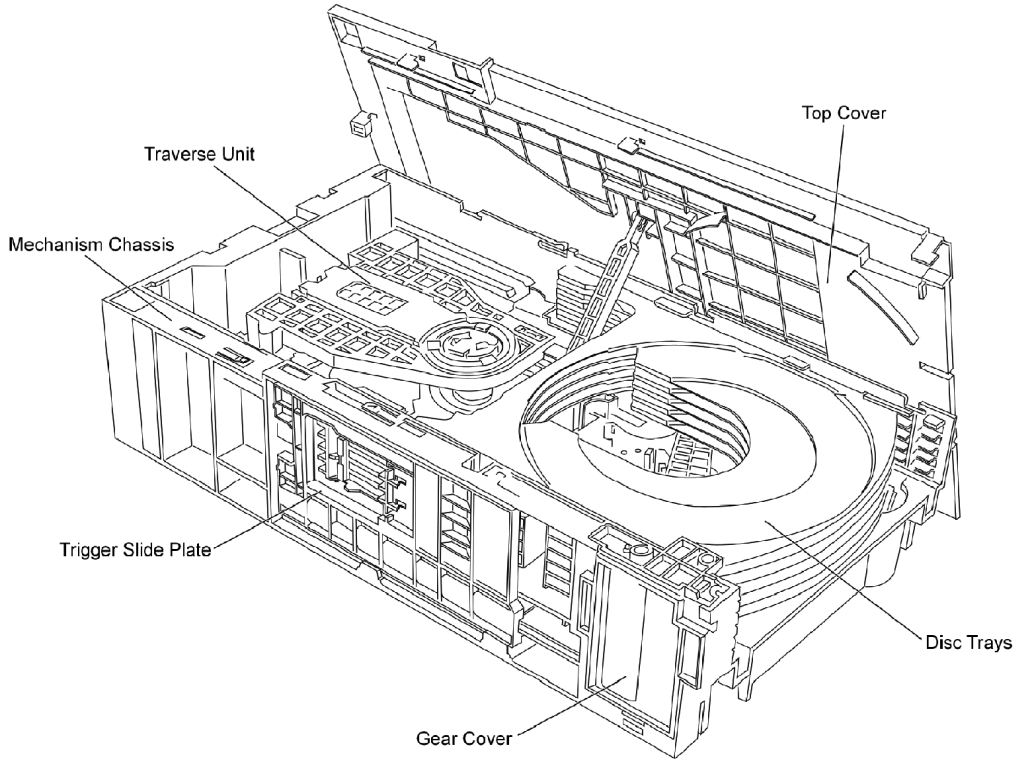

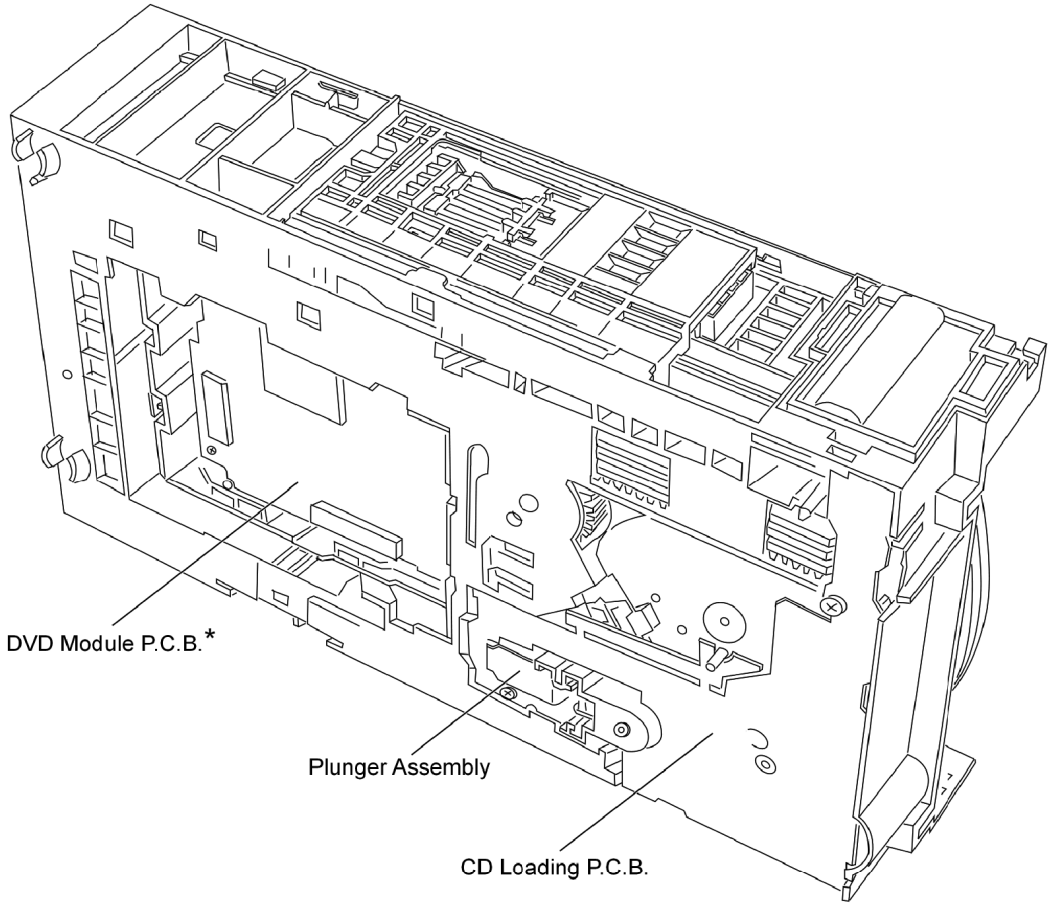

* Illustration for DVD Module P.C.B. (Applied models: VK460/660/760/860/960)

8.1.1. General Feature

- This is a five disc changer mechanism for CD/DVD. The outline figure is shown below.

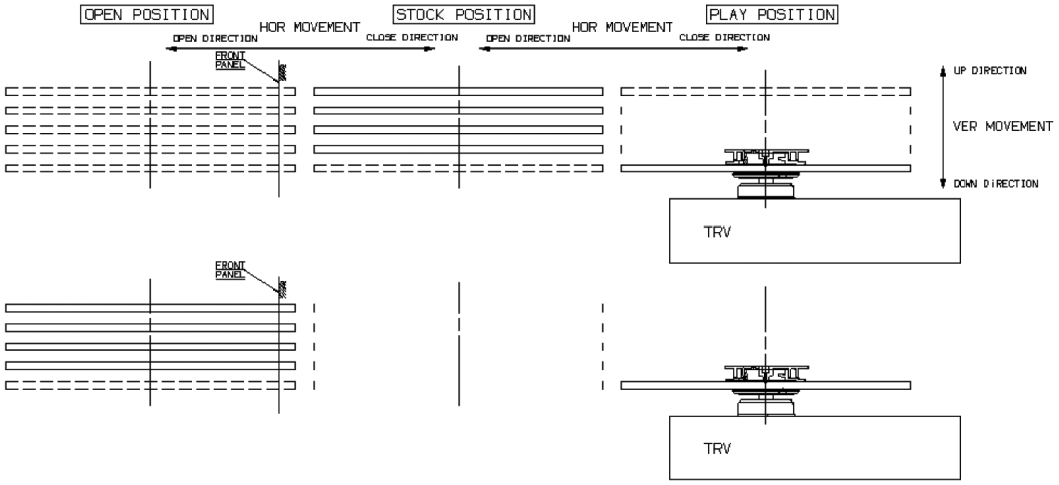

- The mechanism has **"CHANGE WHILE PLAY"** function. It open other trays for disc exchanging while one tray is at PLAY position performing recording or reproducing.
- The mechanism can quickly change all trays with **"CHANGE ALL"** function. All trays can be move to OPEN position with one operation.
- There is no sensor to indicate presence of disc on any tray.

8.1.2. Hardware composition

- Below is the hardware components of the mechanism

Name	Function
Open Switch (OPEN-SW)	The switch is used to detect normal tray opening
	The switch is used for detect tray being manually push/trigger when full open
Home Switch (HOME-SW)	Is used to detect cam gear home position
Close Sensor (CLOSE-SENSOR)	Used for normal single tray closing
	Used to detect cam gear rotate to Play Driving position
Play Switch (PLAY-SW)	Detect TRV clamping complete position
Stocking Switch (STOCK-SW)	Detect tray completely transfer for play position to stocking position
UD Sensor (UD-SENSOR)	Detect TRV vertical movement position
Top Switch (TOP-SW)	Detect a default position of TRV vertical movement position
Driver IC	To drive Motor
Motor	Main driving source for changer
Plunger	Switching the driving source from motor to: 1. Tray open/close 2. Drive tray to play/stock position and TRV vertical movement

8.1.3. Mechanism Operation

- This mechanism has the following state:
  1. Driving of a tray to open/close
  2. Up/down operation of a traverse performs a state changes of tray.

  By using the plunger to lift/release of a switching gear, and the cam gear to lift/release the function gear the motor can be link to several gear trains to perform various operations.
- The functions that can be perform in this mechanism are described as below:

Condition	Explanation
Open current playing tray	The state to change current playing disc. All tray will be open at once and current tray at PLAY position will be expose.
Open All	The state where all trays being driven to OPEN position. The disc can be taken in or out from tray to tray by close tray one by one from top to bottom.
Stock	The state where the trays are stored in STOCK position
Play	The state where one of the tray 5 trays is being driven to PLAY position and clamped by traverse unit
Play & Open Tray-*	The state where one of the tray is in playing position performing recording or reproducing, other trays can be used (OPEN position) for disc exchanging without stopping the recording or reproducing process.

Condition	Explanation
Change	The state when one of the opened tray being driven from OPEN position to STOCK position and other opened trays remain still at OPEN position.
Close All	The state where all open trays will being driven from OPEN position to STOCK position, one by one from top to bottom

Note: * represent tray number (from 1 ~ 5)

8.1.4. DVD/CD Mechanism Changer Unit (CRS1D)

Note:

This service manual does not contain the following information for the mention DVD/CD Mechanism Changer Unit:

- Schematic Diagram, Block Diagram and P.C.B. layout of CD/DVD Loading P.C.B.
- Part List for individual parts of the mechanism.
- Exploded View and Parts List for individual parts of the DVD/CD Mechanism Changer Unit.

Please refer to the original service manual (Order No. MD0603065A3) for the DVD/CD Mechanism Changer Unit (CRS1D).

8.2. Music Port

Before connection

- Disconnect the AC power supply cord.
- Turn off all equipment and read the appropriate operating instructions.
- The equipment connections described are examples only.
- Peripheral equipment and optional cables are sold separately unless otherwise indicated.

Connecting to a portable audio equipment

This feature enables you to enjoy music from a portable audio equipment.

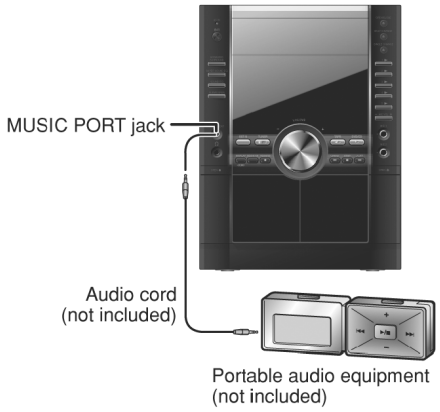

EXT-IN Playing from a portable audio equipment

Switch off the equalizer function (if there is any) of the portable audio equipment before you plug into the MUSIC PORT jack. Otherwise, sound from the speaker may be distorted.

1. **Plug the audio cord into the MUSIC PORT jack and press [EXT-IN] to select "MUSIC PORT".**
   MUSIC PORT ↔ AUX
2. **Play the portable audio equipment. (See the portable audio equipment's instruction manual.)**

RECORD Recording from a portable audio equipment

1. **Press [EXT-IN] to select "MUSIC PORT".**
   MUSIC PORT ↔ AUX
2. **Play the portable audio equipment.**
3. **Press [●, RECORD] on the main unit to start recording.**

With reference to page 27 of the operating instruction manual.

9 Self diagnosis and special mode setting

This unit is equipped with functions for checking and inspecting.

9.1. Service Mode Summary Table

9.1.1. Service Mode Summary Table (For DVD)

The service modes can be activated by pressing various button combination on the player and remote control unit.

Below is the summary of major checking:

Player buttons	Remote control unit buttons	Application	Note
[STOP]	[0]	Error code display.	(Refer to section, “9.2.1 of Service Mode Table 1” for more information).
	[5]	Jitter checking.	
	[PAUSE]	Initial setting of laser drive current	
	[1]	ADSC internal RAM data check.	(Refer to section 9.2.2 of Service Mode Table 2 for more information)
	[3]	CD laser drive current check.	
	[FUNCTIONS]	DVD laser drive current check.	
	[6]	Region display and mode.	(Refer to section 9.2.3 of Service Mode Table 3 for more information)
	[7]	Micro-processor firmware version check.	
	[≧10]	Initialization of the player (factory setting is restored.) Used after replacement of micro-computer (DV 5.0 LSI IC (IC8611), FLASH ROM IC, EEPROM and HDMI module.	
	[8]	DVD (HDMI) module firmware version check.	(Refer to section 9.2.4 of Service Mode Table 4 for more information)
	[MENU]	Communication error display.	
	[TOP MENU]	ECC error check.	
	[DISC]	CPPM/CRM keys check.	
	[ENTER]	DVD (HDMI) Module P.C.B. reset.	
	[▲]	Timer 1 check.	(Refer to the section, “9.2.5 Service Mode Table 5” for more information).
	[▼]	Timer 1 reset. (while in Timer 1 check)	
	[►]	Timer 2 check.	
	[◄]	Timer 2 reset. (While in Timer 2 check)	

Note:

An error code will be cancelled if a power supply is turned OFF.

*1: CPPM is the copy guard function beforehand written in the disc for protection of copyrights.

*2: CEC is the consumer electronic control used for high-level user control HDMI-connected devices.

*3: HDCP is the specification developed to control digital audio & video contents transmission for DVI or HDMI connections.

Refer to section 7 (Operating Instruction) for information on the buttons.

9.1.2. Service Mode Summary Table (For Inspection)

Player buttons	Player/Remote Control Unit Buttons	Application	Note
[STOP]	[►►I, ∧/FF]	To enter into self-diagnostic checking.	(Refer to section, “9.2.6 of Service Mode Table 6” for more information).
	[1]	DVD/CD Mechanism changer unit reliability check.	
	[SINGLE CHANGE]	To unlock the traverse unit for service.	
	[4], [7]	To enter into Doctor Mode.	

9.2. Service Mode Table

By pressing various button combinations on the player and remote control unit can activate the various service modes for checking.

Special Note:

Due to the limitations of the no. characters that can be shown on FL Display, the “FL Display” button on the remote control unit is used to show the following page. (Display 1 / Display 2).

9.2.1. Service Mode Table 1

Item		FL Display	Key Operation
Mode Name	Description		Remote Control Key
Jitter check	Jitter check. Jitter rate is measured and displayed. Measurement is repeatedly done in the cycle of one second. Read error counter starts from zero upon mode setting. When the target block data failed to be read out, the counter advances by one increment. When the failure is caused by minor error, it may be corrected when retired to enable successful reading.	(Display 1) 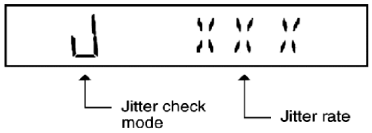 Jitter rate is shown in decimal notation to one place of decimal. Focus drive value is shown in hexadecimal notation. (Display 2) 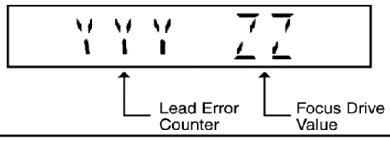 	In STOP (no disc) mode, press [STOP] button on the main unit, and [5] button on the remote control unit. Press [PRESS] button to exit. Press [FL DISPLAY] button on remote control unit for next page
Error code display	Error code check. The latest error code stored in the EEPROM IC is displayed Note: Refer to "Section 9.3 DVD Self Diagnostic Function Error Code" for more detailed information on the error codes.	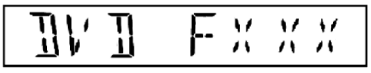 Error code (play_err) is expressed in the following convention. Error code = 0 x DAXX is expressed : DVDnn UXX Error code = 0 x DBXX is expressed: -> DVDnn HXX Error code = 0 x DXXX is expressed: -> DVDnn FXX Error code = 0 x 0000 is expressed: -> DVDnn F--- * "XXX" denotes the error code -> Refer to Section 9.4.1.	In STOP (no disc) mode, press [STOP] button on the main unit, and [0] button on the remote control unit. Cancelled automatically 5 seconds later.
Initial setting of laer drive current	Initial setting of laser drive current. Initial current value for each of the DVD laser and CD laser is separately saved in the EEPROM IC. FL Display sequence Display 1 -> 2	(Display 1) The value denotes the current in decimal notation. (Display 2) 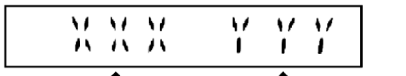 The above example shows the initial current XXXmA and YYYmA for CD laser and DVD laser respectively when the laser is switched on.	In STOP (no disc) mode, press [STOP] button on the main unit, and [PAUSE] button on the remote control unit. Cancelled automatically 5 seconds later. Press [FL DISPLAY] button on remote control unit for next page (FL Display) on values of laser drive current.

9.2.2. Service Mode Table 2

Item		FL Display	Key Operation
Mode Name	Description		Remote Control Key
DVD laser drive current measurement	DVD laser drive current measurement. DVD laer drive current is measured and the result is displayed together with the initial value stored in the EEPROM IC. After the measurement, DVD laser emission is kept on. It is turned off when POWER key is switched off. (It is also turned off when POWER button on the player is switched off.) FL Display sequence Display 1 -> 2	(Display 1) 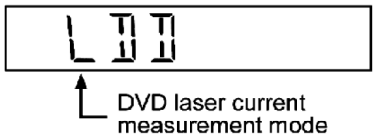 The value denotes the current in decimal notation. (Display 2) 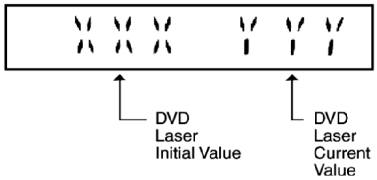 The above example shows the initial current XXXmA and the measured value is YYYmA.	In STOP (no disc) mode, press [STOP] button on the main unit, and [FUNCTIONS] button on the remote Press [FL DISPLAY] button on remote control unit for next page on values of DVD drive current.
ADSC internal RAM data check	ADSC internal RAM data check. ADSC internal RAM data is read out and displayed.	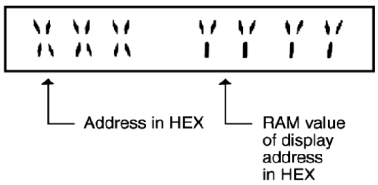 The value is shown in hexadecimal notation.	In STOP (no disc) mode, press [STOP] button on the player, and [1] button on the remote control unit. To exit, press [POWER] button on the
CD laser drive current measurement	CD laser drive current measurement. CD laser drive current measured and the result is displayed together with the initial value stored in the EEPROM IC. After the measurement, CD laser emission is kept on. It is turned off when POWER key is switched off. (It is also turned off when POWER button on the player is switched off.) FL Displaye sequence Display 1 -> 2	(Display 1) 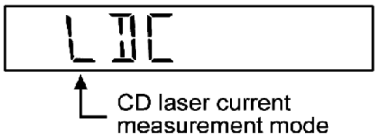 The value denotes the current in decimal notation. (Display 2) 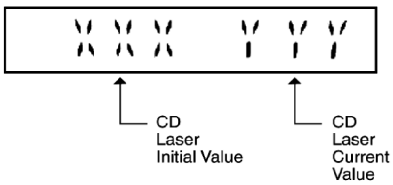 The above example shows the initial current is XXXmA and the measured value is YYYmA.	In STOP (no disc) mode, press [STOP] button on the player, and [3] button on the remote control unit. Cancelled Press [FL DISPLAY] button remote control unit for next page.

9.2.3. Service Mode Table 3

Item		FL Display	Key Operation
Mode Name	Description		Remote Control Key
Micro-processor firmware version display & EEPROM checksum display.	Micro-processor firmware version & EEPROM checksum display. EEPROM checksum is only available due to existence of EEPROM IC. FL Display Sequence Display 1 -> 2 -> ->3	(Display 1) E X X X (Display 2) X X X Y Y Y Y Micro-P IC Version No. EEPROM IC Checksum (If applicable, refer below.) (Condition 1) X X X NG If the version of the EEPROM IC does not match, [NG} is displayed. (Condition 2) X X X NO (a) If there is no EEPROM IC header string OR (b) If there is no EEPROM IC (no data is received by micro-processor), [NO] is displayed. (Condition 3) X X X Y Y Y Y If the EEPROM IC version matches, checksum [YYYY] is displayed. (Display 3) Z Z Z Z	In STOP (no disc) mode, press [STOP] button on the main unit, and [7] button on the remote control unit. Cancelled automatically 5 seconds later. Press [FL DISPLAY] button on remote control unit for next page (FL Display).
Initialization Mode	Initialization. User settings are cancelled and player is initialized to factory setting. It is necessary when after replacement of micro-processor (DV5.0 LSI) IC, Flash ROM IC (IC8651), EEPROM IC (IC8611) & DVD Module P.C.B.	INIT	In STOP (no disc) mode, press [STOP] button on the main unit, and [≧10] button on the remote control unit. Cancelled automatically 5 seconds later.
Region display	Region code display. TV broadcasting system & the model no. information. **Note:** Refer to Figure 9.1 for "Video Design Information".	X Y Y Z Z Z Model No. Information N:NTSC / 6: PAL:60 N:no PAL / P: PAL Region No.: 0-8	In STOP (no disc) mode, press [STOP] button on the main unit, and [6] button on the remote control unit. Cancelled automatically 5 seconds later.

Model Series	Country Region	Region Code	TV Broadcasting System	Product		
				Signal System (Default)	Region Display (Default)	OSD Menu Language
P, PC, PX	USA, Canada, PX	1	NTSC	NTSC (*A)	1PN	English, Spanish, Canadian, French
(S)	Japan	2	NTSC	NTSC (*A)	2PN	Japanese, English
E	Europe	2	PAL	PAL (*C)	2P6	English, French, German, Spanish, Polish, Russian, Czech, Hungarian
EB, EG	Europe	2	PAL	PAL (*C)	2P6	English, French, German, Italian, Spanish, Polish, Swedish, Dutch
GC, GS	Middle East	2	PAL	PAL (*C)	2P6	English, French, German, Spanish, Polish, Russian, Czech, Hungarian
GCS, GD, GT, GCT	South East Asia, Korea, Taiwan	3	PAL/NTSC	NTSC (*B)	3PN	English, Traditional Chinese
GN	New Zealand, Australia	4	PAL	NTSC (*C)	4P6	English, French, German, Italian, Spanish, Polish, Swedish, Dutch
PL, GCP, LB	Central/South/Latin America	4	NTSC	NTSC (*D)	4PN	English, Spanish, French, Brazilian Portuguese
EE	CIS	5	SECAM	PAL (*C)	5P6	English, French, German, Spanish, Polish, Russian, Czech, Hungarian
GK	China	6	PAL	NTSC (*B)	6PN	English, Simplified Chinese

NTSC (*A)

Source	Output
Screen Saver	NTSC
NTSC disc	NTSC
PAL disc	PAL (DVD-V)
	NTSC (DVD-A/VCD)

NTSC (*B)

Source	Output
Screen Saver	NTSC
NTSC disc	NTSC (default)
	PAL60
PAL disc	PAL60

NTSC (*C)

Source	Output
Screen Saver	PAL
NTSC disc	PAL60 (default)
	NTSC
PAL disc	PAL

NTSC (*D)

Source	Output
Screen Saver	NTSC
NTSC disc	NTSC
PAL disc	NTSC

Explanation of Display

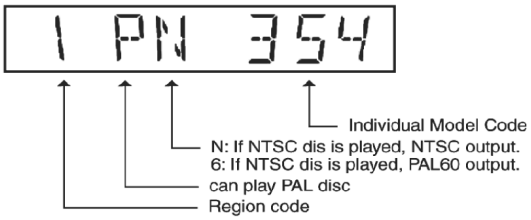

Figure 9.1

9.2.4. Service Mode Table 4

Item		FL Display	Key Operation
Mode Name	Description		Remote Control Key
DVD Mode P.C.B. firmware version display	DVD module firmware version display is on the FL Display. The firmware version can be updated using recovery disc. Note: It is necessary to check for firmware version before carrying out the version update using the disc.	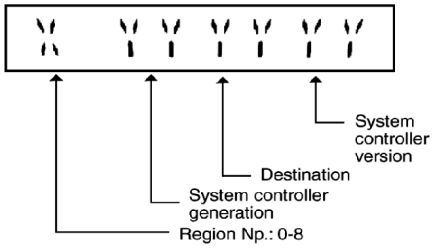	In STOP (no disc) mode, press [STOP] button the main unit, and [8] button on the remote control unit. Cancelled automatically in 5 seconds later.
Communication error display	Display frequency of communication errors between system control IC and mechanism control IC in the DVD Module P.C.B.	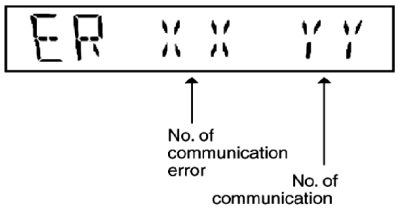	In STOP (no disc) mode, press [STOP] button on the main unit, and [MENU] button on the remote control unit. Cancelled automatically 5 seconds later.
ECC Error Check	ECC erfers to Error Correction Code. It describes the error correction code that was carried out for the decoding of audio & video. FL Display sequence Display 1 -> 2	(Display 1) 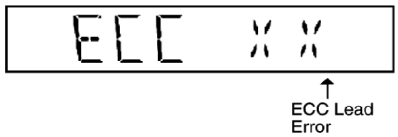 (Display 2) 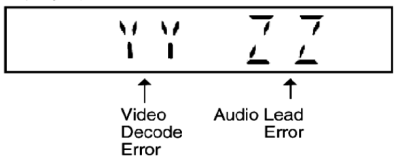	In STOP (no disc) mode, press [STOP] button on the main unit, and [TOP MENU] button on the remote control unit. Press [POWER] button to exit. Press [FL DISPLAY] button on the remote control unit for next page.
CPPM/CRM Keys Check	CPPM/CRM referrs to the Content Protection for Recordable Media and Pre-Recorded Media. It displays the existence of the keys as "1" or "0". OK: Existing of keys. NG: Non existing of keys.	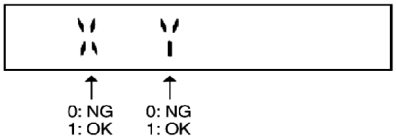	In STOP (no disc) mode, press [STOP] button on the player, and [DISC] button on the remote control unit. Cancelled automatically 5 seconds later.
DVD Module P.C.B. Reset	To reset DVD Module P.C.B.. This process is used when the DVD Module P.C.B. or Flash ROM IC is replaced with a new one.	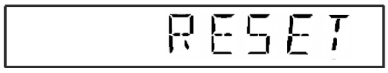	While in initialization mode, press and hold [STOP] followed by [ENTER] on the remote control unit.

9.2.5. Service Mode Table 5

Item		FL Display	Key Operation
Mode Name	Description		Remote Control Key
Timer 1 check	Timer 1 check. Laser operation timer Operation time is measured separately for DVD laser and CD laser. FL Display sequence Display 1 -> 2	(Display 1) T 1 X X X X DVD laser user time Shown in the above is DVD laser usage time, and in the figure below is the CD laser usage time. Time is shown in 4 digits of decimal notation in a unit of 10 hours. "0000" will follow "9999". (Display 2) X X X X CD laser user time Time is shown in 4 digits of decimal notation in a unit of 10 hours. "0000" will follow "9999". (CD laser)	In STOP (no disc) mode, press [STOP] button on the main unit, and " ▲ " button on the remote control unit. Cancelled automatically 5 seconds later.
Timer 1 reset	Timer 1 reset. Laser operation timer of both DVD laser and CD laser is reset all at once.	T 1 0000 Time is shown in 4 digits of decimal notation in a unit of 10 hours. "0000" will follow "9999".	While in Timer 1 check mode, press [▼] button on the remote control unit. Cancelled automatically 5 seconds later.
Timer 2 check	Timer 2 check. Spindle motor operation timer.	T2 X X X X X Time is shown in 5 digits of decimal notation in a unit of 10 hours. "00000" will follow "99999".	In STOP (no disc) mode, press [STOP] button on the main unit, and [▶] button on the remote control unit. Cancelled automatically 5 seconds later.
Timer 2 reset	Timer 2 reset. Spindle motor operation timer.	T2 00000 Time is shown in 5 digits of decimal notation in a unit of 10 hours. "00000" will follow "99999".	While in Timer 2 check mode, press [◀] button on the remote control unit. Cancelled automatically 5 seconds later.

9.2.6. Special Mode Table 6

Item		FL Display	Key Operation
Mode Name	Description		Front Key
Self-Diagnostic Mode	To enter into self-diagnostic checking for main unit.	T	In tape mode (with no cassette inserted into Deck 1/2): 1. Press and hold [■, STOP] button for 2 seconds followed by [∧/FF/►►I]. To exit, press [⏻/I, AC IN] button on main unit or remote control unit.
DVD/CD Changer Reliability Test	To determine the reliability of DVD/CD Changer Unit. (For more information, refer to section 10.2.7)	00001 The counter will increment by one. When reach 99999 will change to 00000.	In DVD/CD mode (ensure no disc is inserted): 1. Press and hold [■, STOP] button for 2 seconds followed by [∧/FF/►►I]. 2. Press [1] on remote control. To exit, press [⏻/I, AC IN] button on main unit or remote control unit. (The tray will return to PLAY position and then power off.)
Service Mode (For Traverse Unit)	To unlock the traverse unit for service.	SRVC TRV 1. All trays are set to "STOCK" position. 2. Mechanism set to tray 5. 3. Cam gear set to "HOME" position.	In DVD/CD mode (ensure no disc is inserted): 1. Press and hold [■, STOP] button for 2 seconds followed by [∧/FF/►►I] on the main unit. 2. Press [SINGLE CHANGE] button on the main unit. To exit, power off the main unit.
Doctor Mode	To enter into Doctor mode for checking of items. FL Display sequence Display 1 -> 2 -> 3 -> 4	(Display 1) All segments of FL will light up. (Display 2) DVD (Display 3) F_ (Display 4) NO DISC	In any mode, 1. Press [■, STOP] button on main unit followed by [4] and [7] on remote control unit. To exit, press [ENTER] button on remote
Firmware version check	To check the EEPROM checksum and Micro-P firmware version. FL Display sequence Display 1 -> 2	(Display 1) Micro-P Version EEPROM Checksum (if applicable) The Checksum of EEPROM and firmware version will be displayed. * ROM correction ** Firmware version No.	In Doctor mode, press [■, STOP] button on the main unit, followed by [4] and [7] on the remote control unit. To exit, press [ENTER] button on the remote control unit or [⏻/I, AC IN] button on the main unit or remote control
Cold Start	For restart	-- -- -- -- -- -- -- --	In Doctor mode: 1. Press [4] on remote control. To exit, press [ENTER] button on remote control or power off the main unit.
Tape Eject Test	To check on the tape eject function (For deck 1/2)	No display	In doctor mode: 1. Press [0] button on remote control.

Item		FL Display	Key Operation
Mode Name	Description		Front Key
FL Display Test	To check the FL segments display (All segments will light up and LED will blink at 0.5 second internal.	All segments of FL will light up	In Doctor mode: 1.Press [DIMMER] button on remote control.
DVD/CD Changer Operation Check	To check the operation of changer unit for disc change. FL Display sequence Display 1 -> 2	(Display 1) 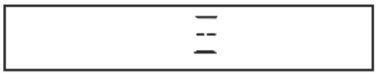 (Display 2) 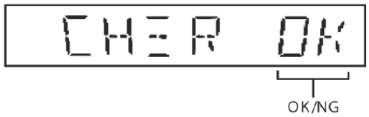 If changer is not working, it will show "NG"	In Doctor mode: 1. Press [DISC] button on remote control unit To exit, press [ENTER] on remote control unit or power off the main unit.

9.2.7. DVD/CD Mechanism changer unit ageing test mode

Below is the process flow chart of ageing for the DVD/CD Mechanism Changer Unit. (CRS1D)

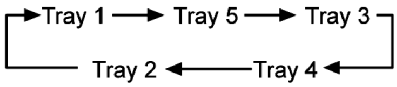

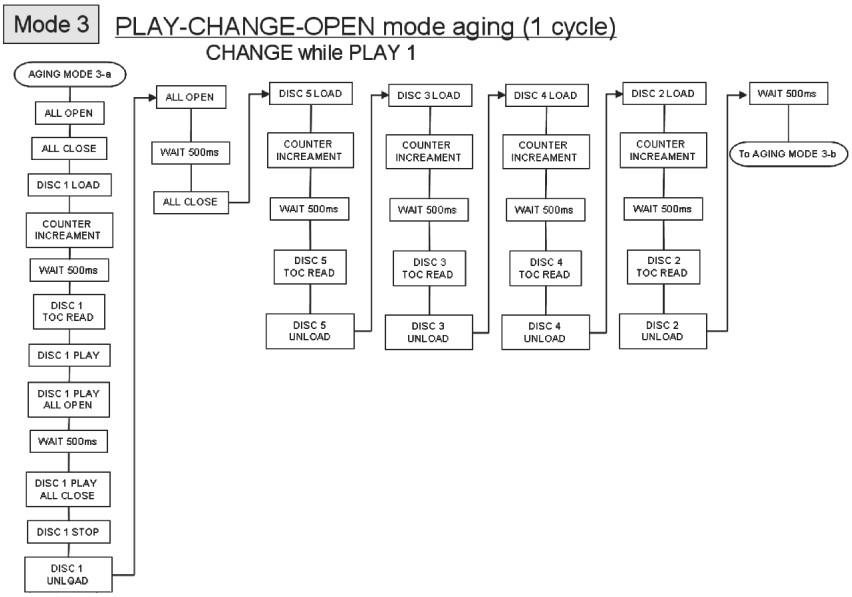

Mode 3 PLAY-CHANGE-OPEN mode aging (1 cycle)

CHANGE while PLAY 5

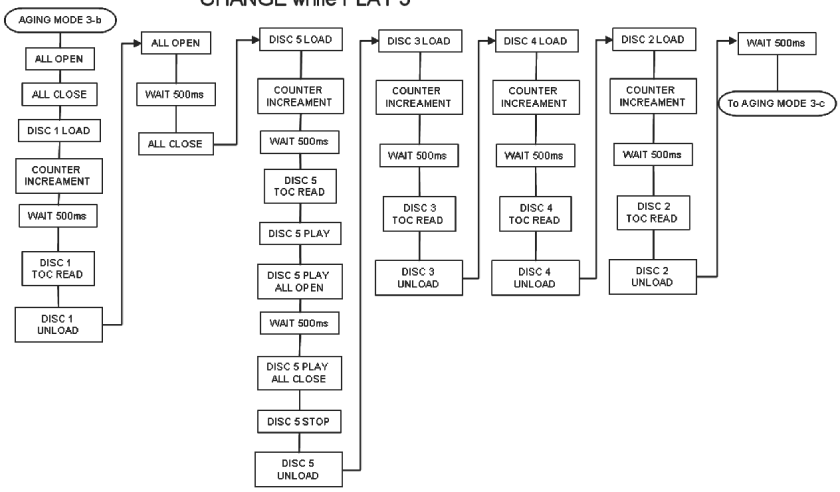

Mode 3 PLAY-CHANGE-OPEN mode aging (1 cycle)

CHANGE while PLAY 3

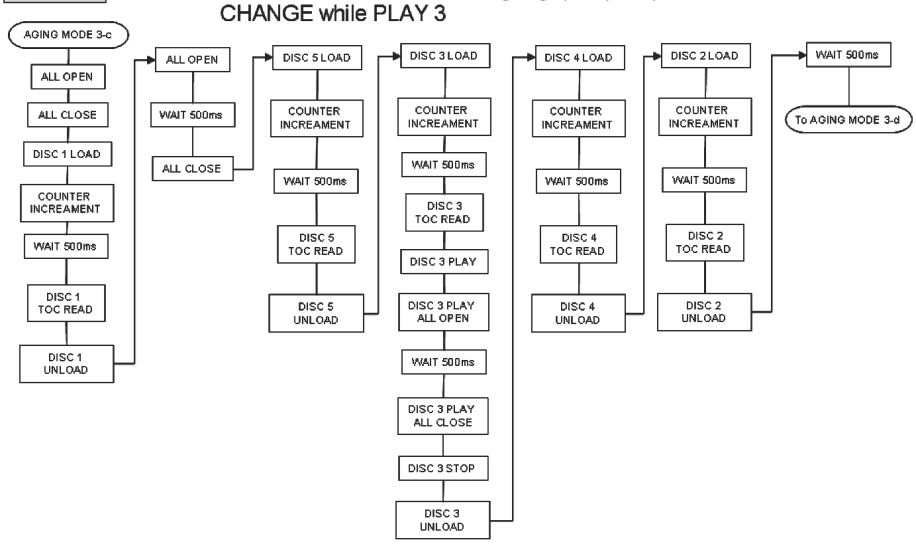

Mode 3 PLAY-CHANGE-OPEN mode aging (1 cycle)

CHANGE while PLAY 4

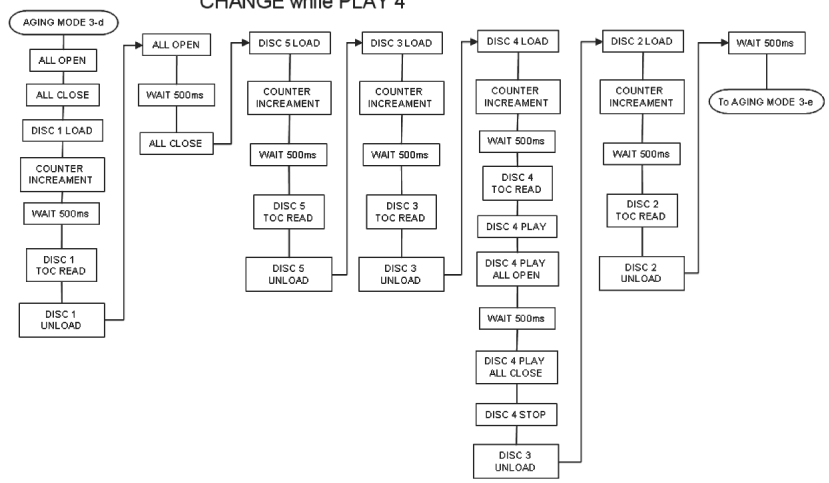

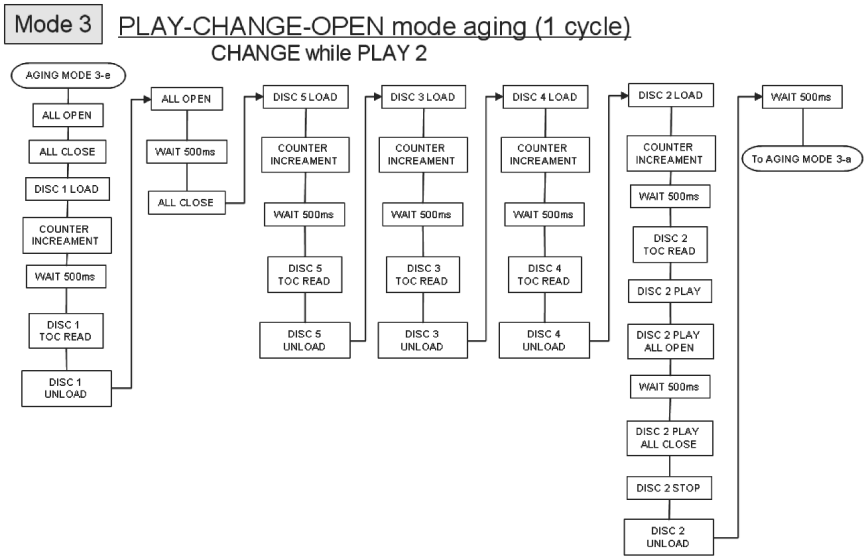

9.3. Optical Pick-up Breakdown Diagnosis

This unit is equipped with the optical pickup self-diagnosis function and the tilt adjustment check function. Follow the procedure described below during repair in order to perform self-diagnosis and tilt adjustment effectively. Especially when “NO DISC” is displayed, be sure to apply the self-diagnosis function before replacing with an optical pickup. Replacement of optical pickup generally requires when the present value of laser drive exceeds 23 (DVD) or 34 (CD).

Note:

Start diagnosis within three minutes after turning on the power (as diagnosis fails when the unit becomes warm).

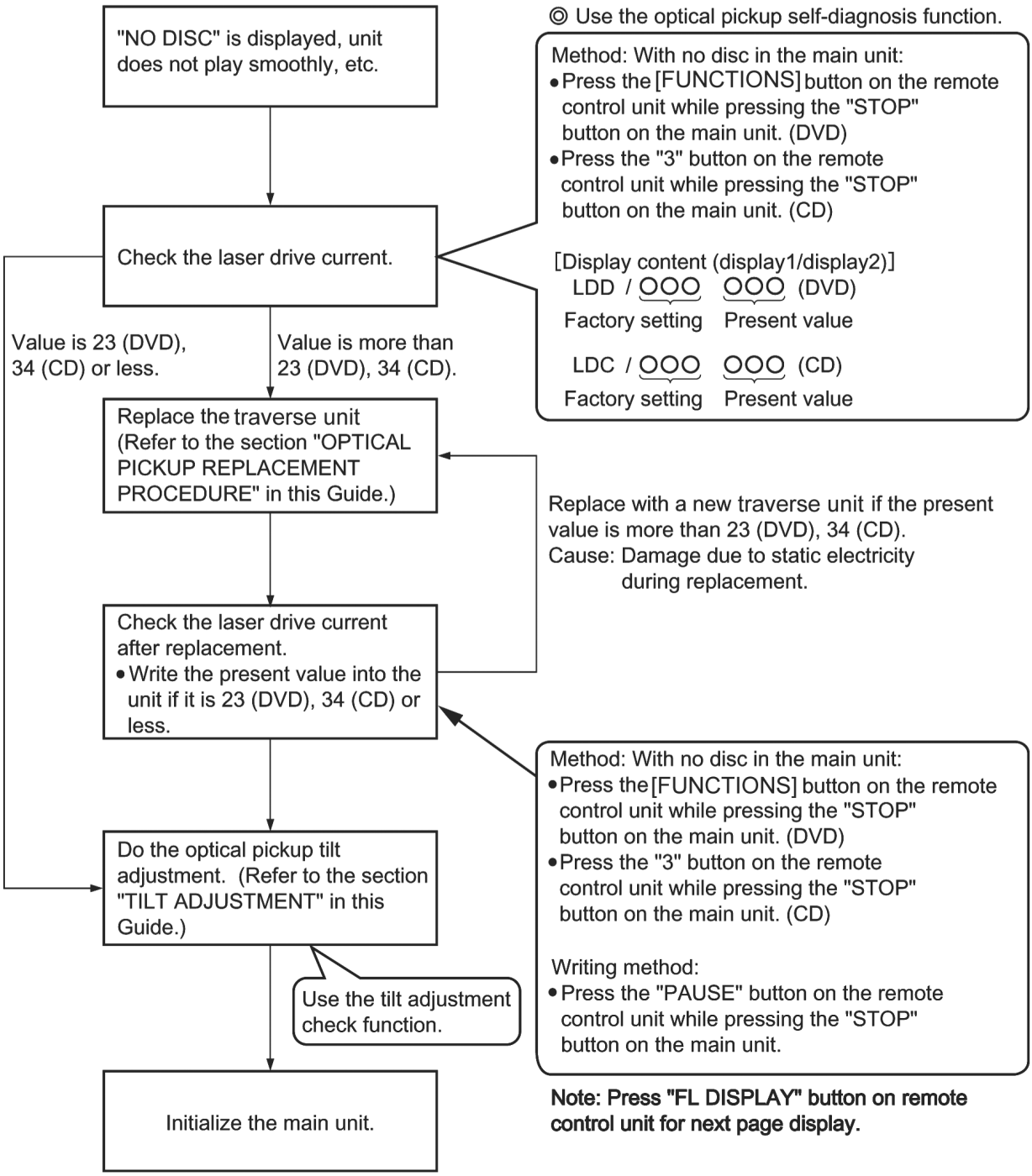
"NO DISC" is displayed, unit does not play smoothly, etc.
Check the laser drive current.
Value is 23 (DVD), 34 (CD) or less.
Value is more than 23 (DVD), 34 (CD).
Replace the traverse unit (Refer to the section "OPTICAL PICKUP REPLACEMENT PROCEDURE" in this Guide.)
Check the laser drive current after replacement.
• Write the present value into the unit if it is 23 (DVD), 34 (CD) or less.
Do the optical pickup tilt adjustment. (Refer to the section "TILT ADJUSTMENT" in this Guide.)
Use the tilt adjustment check function.
Initialize the main unit.
◎ Use the optical pickup self-diagnosis function.
Method: With no disc in the main unit:
• Press the [FUNCTIONS] button on the remote control unit while pressing the "STOP" button on the main unit. (DVD)
• Press the "3" button on the remote control unit while pressing the "STOP" button on the main unit. (CD)
[Display content (display1/display2)]
LDD / OOO OOO (DVD)
Factory setting Present value
LDC / OOO OOO (CD)
Factory setting Present value
Replace with a new traverse unit if the present value is more than 23 (DVD), 34 (CD).
Cause: Damage due to static electricity during replacement.
Method: With no disc in the main unit:
• Press the [FUNCTIONS] button on the remote control unit while pressing the "STOP" button on the main unit. (DVD)
• Press the "3" button on the remote control unit while pressing the "STOP" button on the main unit. (CD)
Writing method:
• Press the "PAUSE" button on the remote control unit while pressing the "STOP" button on the main unit.
Note: Press "FL DISPLAY" button on remote control unit for next page display.

9.4. DVD Self-Diagnostic Function Error Code

9.4.1. DVD Module Error Code Table

Error Code	Diagnosis Contents	Description of error	Automatic FL Display	Remarks
U702	HDMI/DVI I2C communication error	The communication error of I2C when connecting it with HDMI/ DVI. For instance, when EDID information to which information on the TV set side has been described cannot be read, it is generated.	DVD U702	Press [■ STOP] on main unit for next error.
U703	HDMI/DVI attestation error	When attestation (HDCP) with the TV side fails when connecting it with HDMI/DVI, it is generated.	DVD U703	Press [■ STOP] on main unit for next error.
U704	HDMI/DVI SRM Riborcerar	It is generated at the equipment to which the TV set is Riborced when connecting it with HDMI/DVI.	DVD U704	Press [■ STOP] on main unit for next error.
U705	HDMI/DVI SRM disk falsification check error	It is generated at the time of it is time when illegal the SRM data of the reproducing disk (verify error), when connecting it with HDMI/DVI.	DVD U705	Press [■ STOP] on main unit for next error.
F740	HDMI device key	I2C error when writing HDMI Key device into transmitter.	DVD F740	Press [■ STOP] on main unit for next error.
F893	FLASH ROM IC data falsification error	Firmware error, DV5 LSI IC (IC8651) error.	DVD F893	Press [■ STOP] on main unit for next error.
F894	EEPROM IC abnormality error	When failing in the access to EEPROM IC located in the DVD (HDMI) Module P.C.B. (IC8611)	DVD F894	Press [■ STOP] on main unit for next error.
F895	Language area abnormal	Firmware version agreement check for factory preset setting failure prevention.	DVD F895	Press [■ STOP] on main unit for next error.
F896	No existence model	Firmware version agreement check for factory preset setting failure prevention.	DVD F896	Press [■ STOP] on main unit for next error.
F897	Initialization error	Incomplete initialization after writing of new firmware (Factory preset setting failure prevention)	DVD F897	Press [■ STOP] on main unit for next error.
F898	Disagreement of hardware and software	Unsuitable combination of AV Decoder, SDRAM & FLASH ROM IC (firmware).	DVD F898	Press [■ STOP] on main unit for next error.
F899	The communication specification disagreement between micro-processor	Unsuitable combination of number of system com and panel com used. (Frimware)	DVD F899	Press [■ STOP] on main unit for next error.

Note:

An error code will be canceled if a power supply is turned OFF.

*1: CPPM is the copy guard function beforehand written in the disk for protection of copyrights.

9.4.2. Traverse Unit Error Code Table

Error Code	Diagnosis Contents	Description of error	Automatic FL Display	Remarks
U11	Focus servo error	Focus coil, FE signal error.	DVD U11	Press [■ STOP] on main unit for next error. (Unfinalized DVD-R is likely to beocme U11.)
U15	Unfinalized DVD-R		DVD U15	
F500	DSC error	DV5 LSI IC (IC8001) stops in the occurance of servo error (startup, focus error, etc)	DVD F500	Press [■ STOP] on main unit for next error.
F506	Invalid media	Disc is flipped over, TOC unreadable, incompatible disc.	DVD F506	Press [■ STOP] on main unit for next error.
F620	OPU unit abnormality temperature	Laser protection at high temperature.	DVD F620	Press [■ STOP] on main unit for next error.
F621	OPU unit circuitry temperature	Laser protection at circuit failure.	DVD F621	Press [■ STOP] on main unit for next error.

9.4.3. Power Supply Error Code Table

Error Code	Diagnosis Contents	Description of error	Automatic FL Display	Remarks
F61	The abnormalities in an output or power supply circuit of POWER AMP	In normal operation, when DCDET2 goes to "L" (Low) (Not during POWER OFF condition), F61 appears on FL Display and PCONT goes to "L" (Low). This is due to speaker output has DC voltage or fan is not working.	F61	Press [■ STOP] on main unit for next error.
F76	Abnormality in the output voltage of stabilized power supply	In normal operation when DCDET1 is detected "L" (Low) for two consecutive times, F76 is displayed on FL for 2 seconds and after that PCONT will be turned to "L" (Low). This is due to any of the DC voltages (+9V, +7V, -7V, +5V, +5.3V etc.) not available.	F76	Press [■ STOP] on main unit for next error.

9.4.4. ECC Error Code Table

Error Code	Diagnosis Contents	Description of error	Automatic FL Display	Remarks
F600	Administrative information cannot be acquired by the recovery error.	It becomes impossible NaviPack etc. were done, and not to be able to acquire necessary information in the navigation's changing due to wound etc. of DISC, and to have done the reproduction transition.	DVD F600	Press [■ STOP] on main unit for next error.
F601	Irregular sector ID was demanded.	It tried to access the position that did not exist on DISC by the recording error etc. of authoring.	DVD F601	Press [■ STOP] on main unit for next error.
F603	KEYDET cannot be acquired by the recovery error.	The data for decoding copyright protection (CSS) cannot be acquired due to wound etc. of DISC, and it is not possible to reproduce.	DVD F603	Press [■ STOP] on main unit for next error.

9.4.5. DVD/CD Mechanism Changer Unit Error Code Table

Error Code	Diagnosis Contents	Description of error	Automatic FL Display	Remarks
IHMS	Cam gear abnormality	Cam gear does not rotate to "HOME" position	IHMS Error code Sequence of errors	For DVD/CD mechanism changer unit (CRS1D). Press [SINGLE CHANGE] on main unit for next error.
ICSL	Cam gear/gear units abnormal	Cam gear does not rotate to "PLAY" driving position and ence does not drive playing tray to "STOCK" position.	ICLS Error code Sequence of errors	For DVD/CD mechanism changer unit (CRS1D). Press [SINGLE CHANGE] on main unit for next error.
ISTK	Drive rack/gear assembly abnormal	The tray drive rack does not move to "STOCK" positoin. (Tray does not move to "STOCK" position)	ISTK Error code Sequence of errors	For DVD/CD mechanism changer unit (CRS1D). Press [SINGLE CHANGE] on main unit for next error.
IPLY	Drive rack/gear assembly abnormal	The tray drive rack does not move to "PLAY" position. (Tray does not move to "PLAY" position)	IPLY Error code Sequence of errors	For DVD/CD mechanism changer unit (CRS1D). Press [SINGLE CHANGE] on main unit for next error.
ITOP	UD assembly	UD rack does not move to front position. This lead to UD base not raise to top position	ITOP Error code Sequence of errors	For DVD/CD mechanism changer unit (CRS1D). Press [SINGLE CHANGE] on main unit for next error.
IUDS	UD assembly	After TOP SW is detected, UD rack does not move into tray 1 position.	IUDS Error code Sequence of errors	For DVD/CD mechanism changer unit (CRS1D). Press [SINGLE CHANGE] on main unit for next error.
HOME	Cam gear/gear assembly abnormal	Cam gear does not move to "HOME" positioin under the following conditions: 1. After tray is loaded to "PLAY" position. 2. After tray is loaded to "STOCK" positoin.	HOME Error code Sequence of errors	For DVD/CD mechanism changer unit (CRS1D). Press [SINGLE CHANGE] on main unit for next error.
LOAD	Tray drive assembly abnormal	Tray unit does not move from "STOCK" to "PLAY" position.	LOAD Error code Sequence of errors	For DVD/CD mechanism changer unit (CRS1D). Press [SINGLE CHANGE] on main unit for next error.

Error Code	Diagnosis Contents	Description of error	Automatic FL Display	Remarks
PDRV	Cam gear/gear assembly abnormal	Cam gear does not move from "HOME" to "PLAY" drive position.	1 PDRV Error code Sequence of errors	For DVD/CD mechanism changer unit (CRS1D). Press [SINGLE CHANGE] on main unit for next error.
UDU	UD base assembly abnormal	UD base assembly does not move upwards from tray 5 to tray 2.	UDU	For DVD/CD mechanism changer unit (CRS1D). Press [SINGLE CHANGE] on main unit for next error.
UDD	UD base assembly abnormal	UD base assembly does not move downwards from tray 1 to tray 5.	UDD	For DVD/CD mechanism changer unit (CRS1D). Press [SINGLE CHANGE] on main unit for next error.
UD1	UD base assembly abnormal	UD base assembly does not move to tray 1.	UD1	For DVD/CD mechanism changer unit (CRS1D). Press [SINGLE CHANGE] on main unit for next error.
F1NG	Fail - safe mode. (For open/close tray unit(s))	When the tray open operation is performed, it fails to open. It will automatically close all trays after the time-out by the microprocessor. During this time when it fails, the error code will appear.	1 F1NG Error code Sequence of errors	For DVD/CD mechanism changer unit (CRS1D). Press [SINGLE CHANGE] on main unit for next error.
F2NG	Fail - safe mode. (For open/close tray unit(s))	When the tray close operation is performed, it fails to close. It will automatically close all trays after the time-out by the microprocessor. During this time when it fails, the error code will appear.	1 F2NG Error code Sequence of errors	For DVD/CD mechanism changer unit (CRS1D). Press [SINGLE CHANGE] on main unit for next error.
RSET	Cam gear jam/close sensor faulty	During tray re-open, the cam gear will rotate in the opposite direction to reset the cam gear position. When it fails, the error code will appear.	1 RSET Error code Sequence of errors	For DVD/CD mechanism changer unit (CRS1D). Press [SINGLE CHANGE] on main unit for next error.

9.4.6. Mechanism Error Code Table

Error Code	Diagnosis Contents	Description of error	Automatic FL Display	Remarks
H01	Mode switch abnormal (Plunger and capstan motor)	Detection of switch for "On" when the deck mechanism is in the driving mode. Detection time at 1.6ms in 6 times interval.	H01	For Deck Mechanism Unit (Deck 1/2). Press [■ STOP] on the main unit for next error. To exit, press [POWER] button on the main unit. Normal operation shall be executed upon next powering on of the main unit.
H02	REC_INHF switch abnormal	Detection of switch for presence of the FORWARD recording tab when a cassette is loaded into the deck. Detection time is 20ms at 2 times interval.	H02	For Deck Mechanism Unit (Deck 1/2). Press [■ STOP] on the main unit for next error. To exit, press [POWER] button on the main unit. Normal operation shall be executed upon next powering on of the main unit.
H03	HALF switch abnormal	Detection of switch for "ON" state when a casstte is loaded into the deck. Detection time is 20ms at 2 times interval. When no cassette is loaded, it shall be in "OFF" state.	H03	For Deck Mechanism Unit (Deck 1/2). Press [■ STOP] on the main unit for next error. To exit, press [POWER] button on the main unit. Normal operation shall be executed upon next powering on of the main unit.
F01	Reel pulse abnormal	Detection of switch for the reel pulse signal toggling between high and low.	F01	For Deck Mechanism Unit (Deck 1/2). Press [■ STOP] on the main unit for next error. To exit, press [POWER] button on the main unit. Normal operation shall be executed upon next powering on of the main unit.
F02	TPS abnormal	Tape position detection signal. It is abnormal condition when the tape ends before the checking is completed.	F02	For Deck Mechanism Unit (Deck 1/2). Press [■ STOP] on the main unit for next error. To exit, press [POWER] button on the main unit. Normal operation shall be executed upon next powering on of the main unit.

9.5. Sales Demostration Lock Function

This function prevents discs from being lost when the unit is used for sales demonstrations by disabling the disc eject function."LOCKED" is displayed on the main unit, and ordinary operation is disabled.

9.5.1. Setting

- **Prohibiting removal of disc**

<Select "DVD/CD" mode>

At POWER ON, condition, press and hold [STOP} button and the power button on the main unit for at least three seconds. (The message, "_ _ _ LOCKED_" appears when the function is activated.)

Note:

"OPEN/CLOSE" and "DISC EXCHANGE" buttons are invalid and the main unit displays "_ _ _LOCKED_" while the lock function mode is entered.

- **Prohibiting operation of selector and disc**

<Select "DVD/CD" mode>

At POWER ON condition, press and hold [>] button and the power button on the main unit for at least three seconds. (The message, "_ _ _ LOCKED_" appears when the function is activated.)

Note:

The following buttons are invalid and the main unit displays "_ _ _LOCKED_" while the lock function mode us entered.

Player	⏏ , ■ , SELECTOR, ▶▶| / , ▶▶ , |◀◀ / ◀◀ , DISC EXCHANGE, DISC SKIP, DISC1-DISC5
Remote controller unit	NUMERIC KEYS 0~9, ≥10 , ■ , ❚❚ , ▶▶| , |◀◀ , ▶▶ , ◀◀ , FUNCTIONS, REPEAT, SLEEP, TOP MENU, RETURN, FL DISPLAY, SETUP, CH SELECT, QUICK OSD, DISC, SELECT, MUTING, MENU & 2ND SELECT

9.5.2. Cancellation

The lock can be cancelled by the same procedure as used in setting. ("UNLOCKED" is displayed on cancellation. Disconnecting the power cable from power outlet does not cancel the lock.)

9.6. Service Precautions

9.6.1. Recovery after the main unit is repaired

- When the FLASH ROM IC (IC8651) or DVD Module P.C.B. is replaced, carry out the recovery processing to optimize the drive.
  Playback the recovery disc to process the recovery automitically.
- Recovery disc (Product number: RFKZD03R005)[SPG]
- Performing recovery process
  1. Load the recovery disc FKZD03R005 on to the main unit and run it.
  2. Recovery is performed automatically. When it is finished, a message appears on the screen.
  3. Remove the recovery disc.
  4. Turn off the power.
  5. Initialize the main unit.

9.6.2. Firmware version-up of the DVD player

- The firmware of the DVD player may be renewed to improve the quality including operability and playability to the substandard disc process to optimize the drive.
  The recovery disc has also firmware version-up.
- After version-up, recovery processing is executed automatically.
- Part number of the recovery disc for version-up will be noticed when it is supplied.
- Updating firmware
  1. Load the recovery disc on to the player and run it.
  2. Firmware version of the player is automatically checked. Appropriate message appears whenever necessary.
  3. Using remote controller's cursor key, select whether version updating is to be done or not. (Selection of Yes/No)
  4. a. If Yes is selected, version updating is performed.
     b. If No is selected, only recovery disc is performed.
  5. a. When updating is finished, remove the disc according to the message appearing on the screen.

b. Remove the disc according to the message appearing on the screen.

6. Turn off the power.

Note:

If the AC power supply is shut out during version-up due to power failure, the version-up is improperly carried out.

In such case, replace the FLASH ROM IC (IC8651) and carry out the version-up again.

9.6.3. DVD Module P.C.B. reset

- When after replacing FLASH ROM IC or DVD Module P.C.B., FL displays error code “DVD F897”. This means the unit is not initialized properly and the following process needs to be carry out.
- Procedures:

1. Press ≧10 on remote control while pressing “STOP” button on the main unit. (To enter into initialization)
2. FL display show “INIT”.
3. While still pressing “STOP” button on main unit, press “ENTER” on remote control . (To reset the unit)
4. FL wll display “RESET” before FL display will change to TOC reading again.
5. Power off unit. Unplug the AC cord.
6. Power on the unit. It should be no problem. If problem persist check on the DVD Module P.C.B. or FLASH ROM IC.

10 Assembling and Disassembling

10.1. Caution

Special Note:

This model uses a new DVD/CD mechanism changer unit CRS1D. In this following section does not contain the necessary disassembly & assembly information for the DVD/CD mechanism changer unit (CRS1D) except the disasembly & assembly of traverse unit. Kindly refer to the original service manual for the DVD/CD mechanism changer unit. (Order No. MD0603064A3).

“ATTENTION SERVICER”

Some chassis components may have sharp edges. Be careful when disassembling and servicing.

1. This section describes procedures for checking the operation of the major printed circuit boards and replacing the main components.
2. For reassembly after operation checks or replacement, reverse the respective procedures.
   Special reassembly procedures are described only when required.
3. Select items from the following index when checks or replacement are required.
4. Refer to the Parts No. on the page of “Parts Location and Replacement Parts List” (Section 23), if necessary.

Caution:

After replacing of DVD/CD Mechanism Changer Unit, ageing test is necessary. Please confirm operation for DVD/CD Mechanism Changer Unit.

Below is the list of disassembly sections

- **Disassembly of Top Cabinet**
- **Disassembly of DVD/CD Mechanism Changer Unit**
- **Disassembly of Rear Panel**
- **Disassembly of Main P.C.B.**
- **Disassembly of SMPS P.C.B.**
- **Disassembly of D-Amp P.C.B.**
- **Disassembly of Front Panel Unit**
- **Disassembly of Mic P.C.B.**
- **Disassembly of Panel P.C.B.**
- **Disassembly of Tact Switch P.C.B.**
- **Disassembly of Deck Mechanism Unit**
- **Disassembly of Deck P.C.B.**
- **Disassembly of Deck Mechanism**
- **Disassembly of Traverse Unit**
- **Disassembly for Optical Pickup Unit (DVD Mechanism)**
- **Disassembly of Deck Mechanism P.C.B.**
- **Disassembly of cassette lid**
- **Rectification for tape jam problem**

Caution Note:
Please use original screw & at correct locations.

Below shown is part no. of different screws types used:

Screw Type	Part No.
a	RHD30007-1SJ
b	RHD30119-S
c	XTW3+12TFC
d	RHD30111-3
e	XTW3+10TFC
f	XTB3+8JFJ
g	XTWS3+6TFC
h	RHD30008
i	RHD26046-L
k	RHD26046-K
l	XTV3+10GFJ-M

10.2. Disassembly flow chart

The following chart is the procedure for disassembling the casing and inside parts for internal inspection when carrying out the servicing.

To assemble the unit, reverse the steps shown in the chart as below.

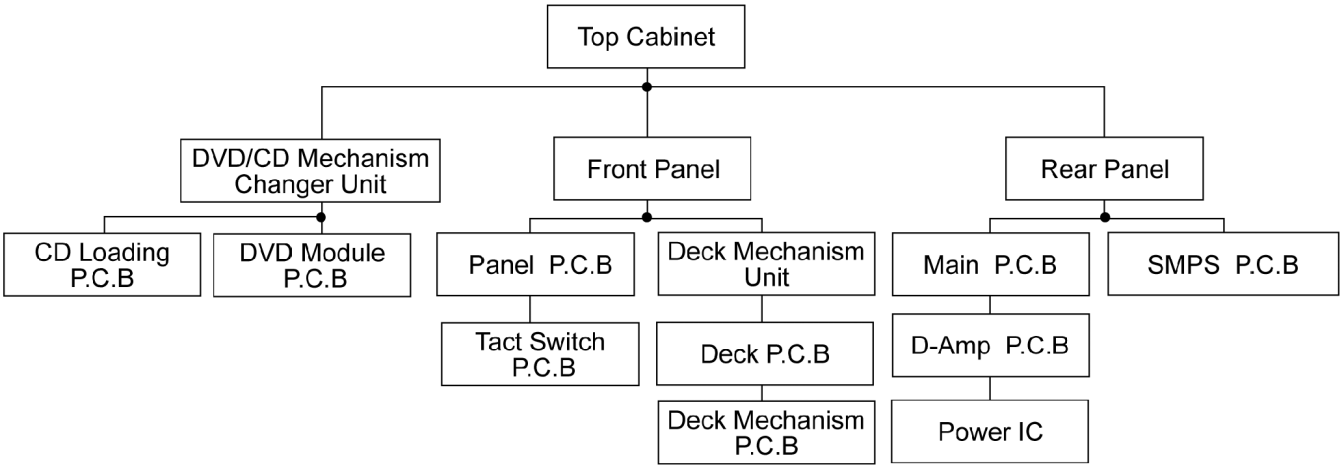

10.3. Main Parts Location

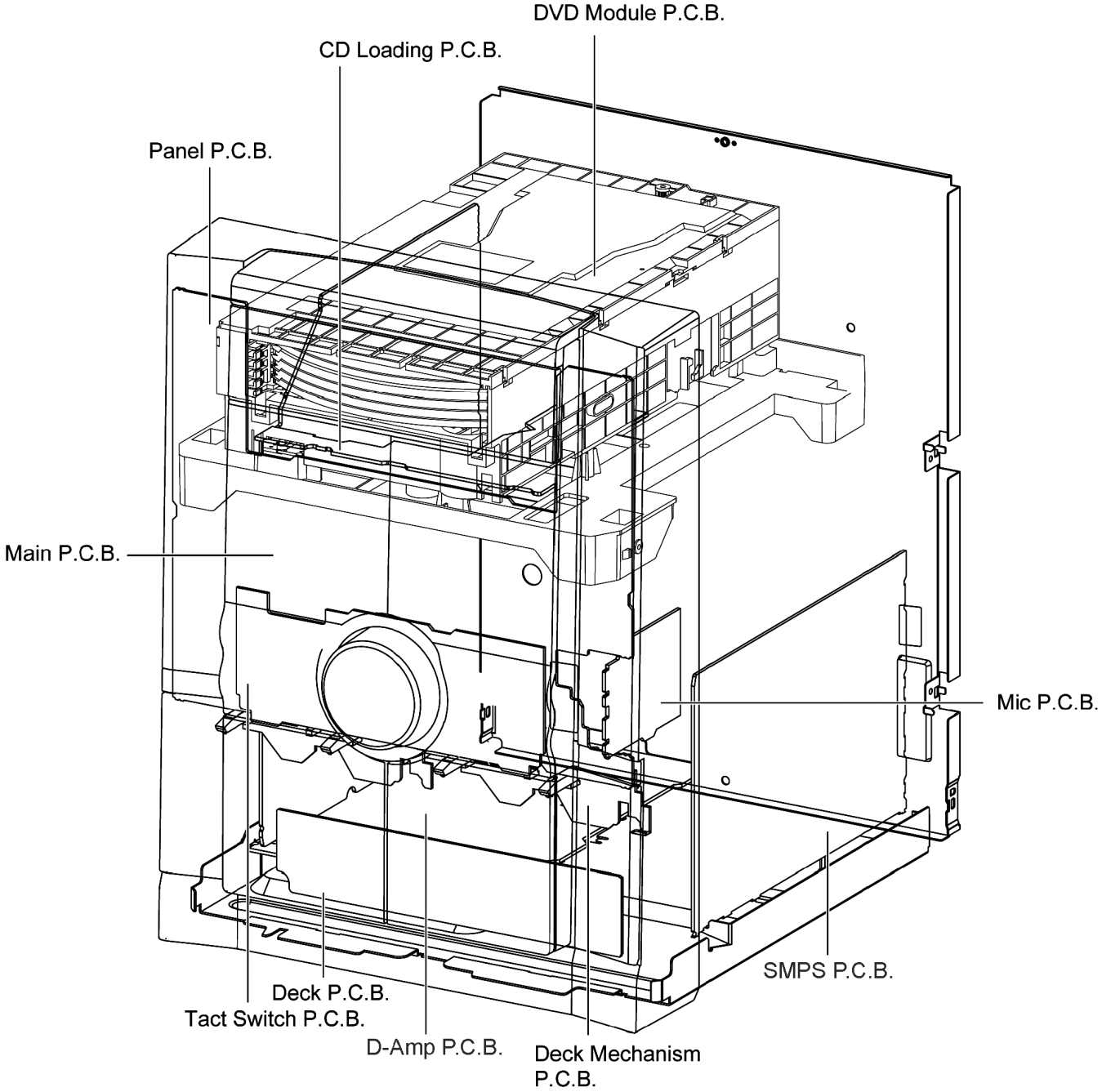

10.4. Disassembly of Top Cabinet

Step 1 Remove 3 screws on both sides on top cabinet.

Step 2 Remove 5 screws at the rear panel.

Step 3 Lift the sides of top cabinet outwards.

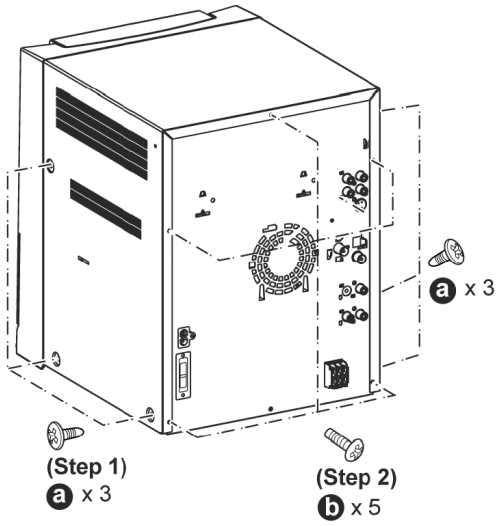

Step 4 Push the top cabinet backwards to release catches.

Step 5 Lift up to remove top cabinet.

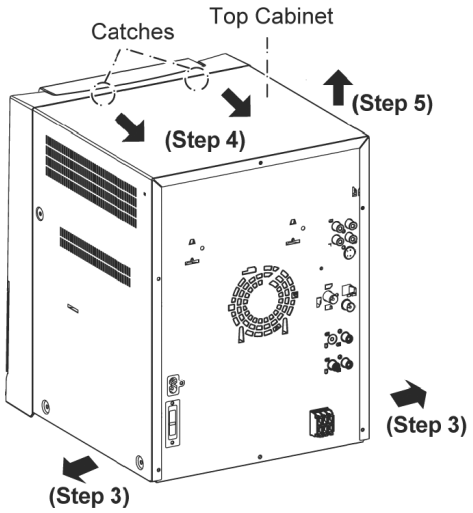

(**Note:** Exercise with care in releasing catches.)

10.5. Disassembly of DVD/CD Mechanism Changer Unit

Step 1 Remove top cabinet.

Step 2 Remove 2 screws at rear panel.

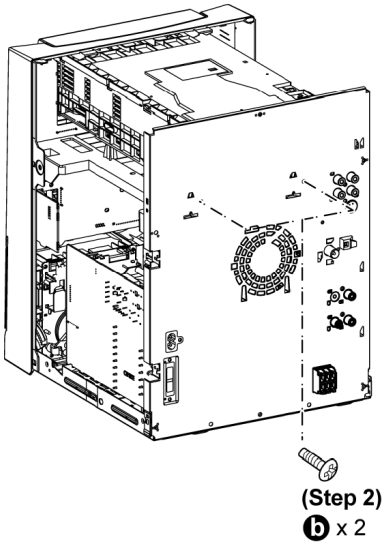

Step 3 Detach the FFC cables at connectors (CN2801 & CN2805) on Main P.C.B..

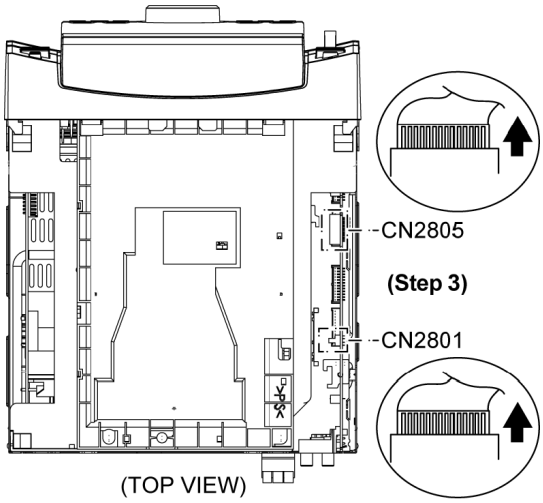

Step 4 Release the claws outwards on both ends.

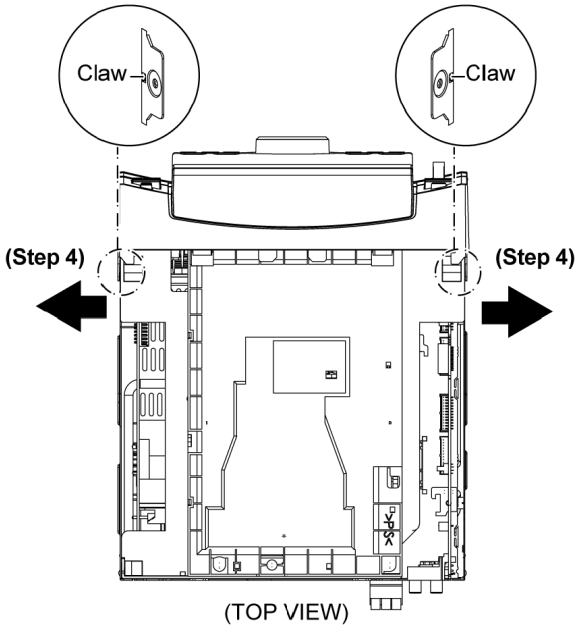

Step 5 Lift the DVD/CD Mechanism Changer Unit upwards to remove it.

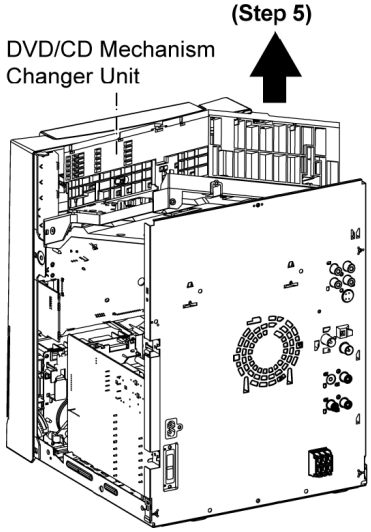

Step 6 Remove 2 screws.

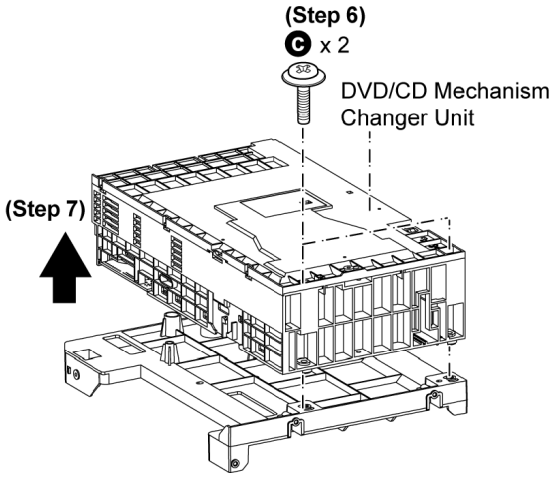

Step 7 Remove the DVD/CD Mechanism changer unit.

Note:

For disassembly & assembly of traverse unit, please refer to section 10.16 of this service manual. Please refer to original Service Manual for the Disassembly and Assembly of the DVD/CD Mechanism Changer Unit (CRS1D).

10.6. Disassembly of Rear Panel

Step 1 Remove top cabinet.

Step 2 Remove 10 screws (For GC only).

Step 2 Remove 12 screws (For GS/GCS/GCT only).

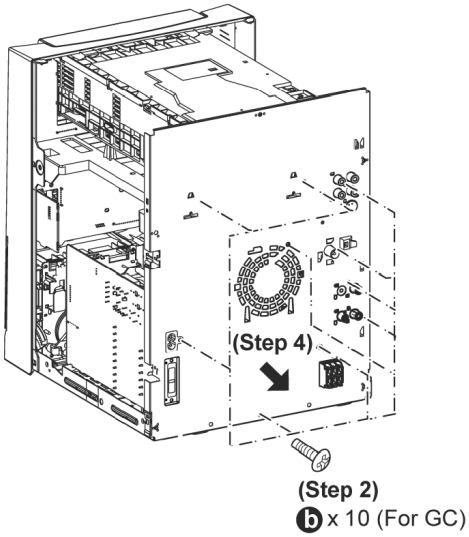

- **For GCS/ GCT/ GS**

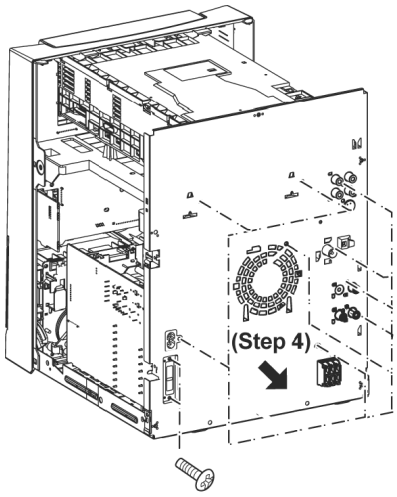

Step 3 Detach FFC cables at connectors (CN2801 & CN2805) on Main P.C.B..

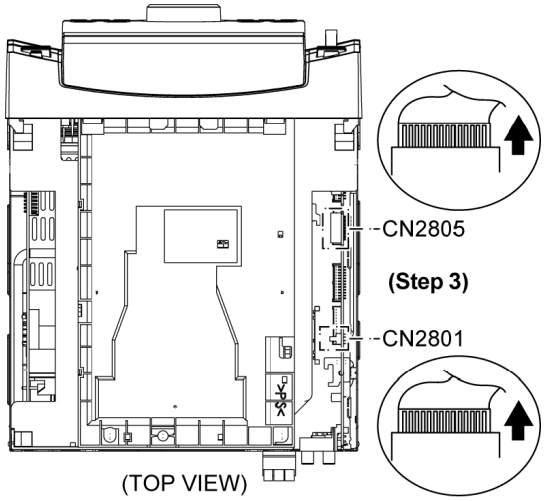

Step 4 Remove rear panel.

10.7. Disassembly of Main P.C.B.

Step 1 Remove top cabinet.

Step 2 Remove DVD/CD mechanism changer unit (Follow step 1 to 5).

Step 3 Remove rear panel.

Step 4 Detach FFC cables at connectors (CN2803, CN2806 & CN2807) on Main P.C.B..

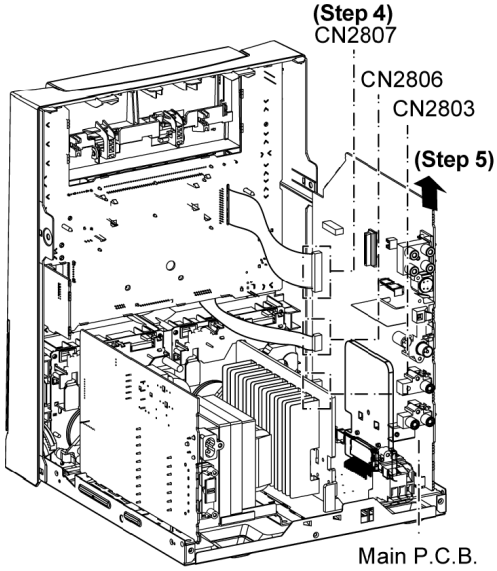

Step 5 Lift up & remove Main P.C.B.

Caution:

Do not apply strong force when disassembling of Main P.C.B.

10.8. Disassembly of SMPS P.C.B.

Step 1 Remove top cabinet.

Step 2 Remove DVD/CD mechanism changer unit (Follow step 1 to 5).

Step 3 Remove rear panel.

Step 4 Detach cables at connectors (CN5950 & CN5951) on SMPS P.C.B..

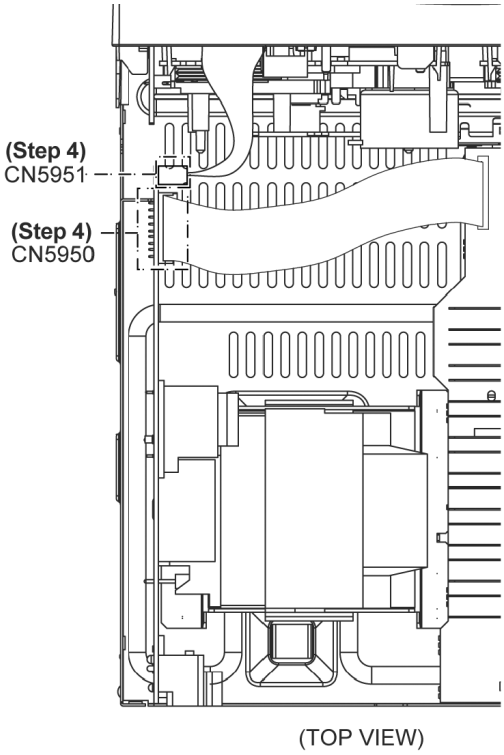

Step 5 Remove 3 screws from bottom chassis.

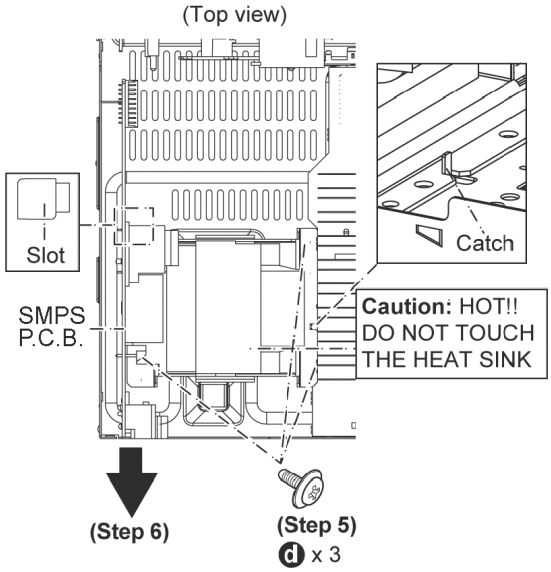

Step 6 Tilt the SMPS P.C.B, push backwards to remove it.

Caution: Ensure the transformer seats properly into the slot during assembly.

10.9. Disassembly of D-Amp P.C.B.

Step 1 Remove top cabinet.

Step 2 Remove DVD/CD mechanism changer unit (Follow step 1 to 5).

Step 3 Remove rear panel.

Step 4 Remove Main P.C.B..

Step 5 Remove 4 screws on D-Amp P.C.B..

Caution: Keep the support P.C.B in safe place for assembling purpose.

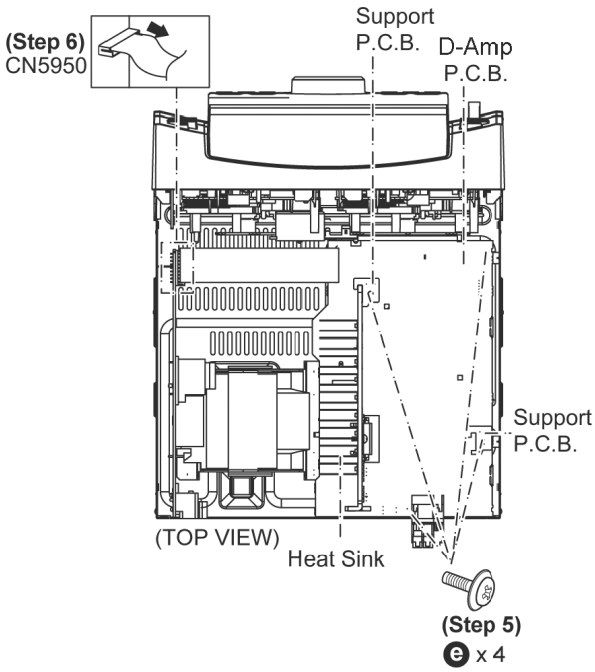

Step 6 Detach cable at connector (CN5950) on SMPS P.C.B..

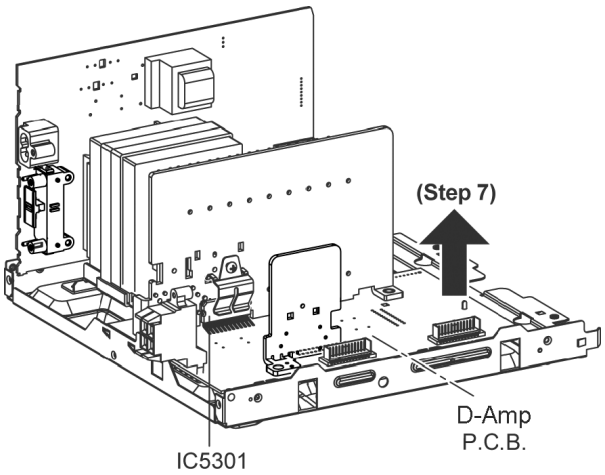

Step 7 Remove D-Amp P.C.B..

- **Replacement of Power Amp IC (IC5301).**

Step 1 Flip the D-Amp P.C.B. over and desolder the pins.

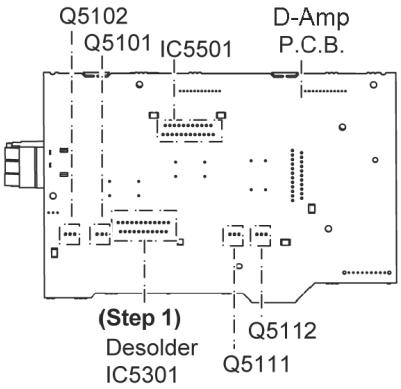

Step 2 Remove 1 screw.

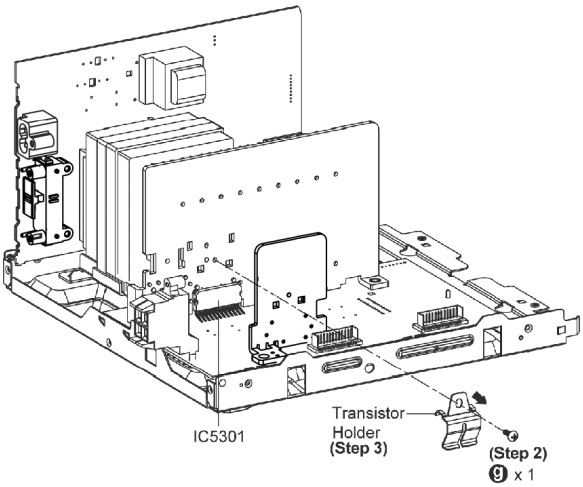

Step 3 Remove the transistor holder.

Step 4 Remove IC5301 from heat sink unit.

- **Replacement of Power Amp IC (IC5501).**

Step 1 Flip the D-Amp P.C.B. over and desolder the pins.

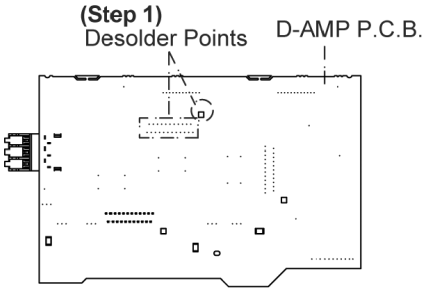

Step 2 Twist the heat sink leg as arrow shown.

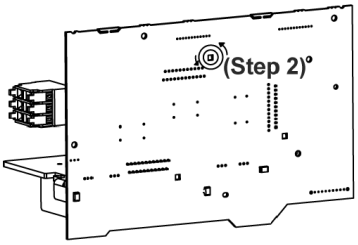

Step 3 Remove up the heat sink sub assembly (with IC5501).

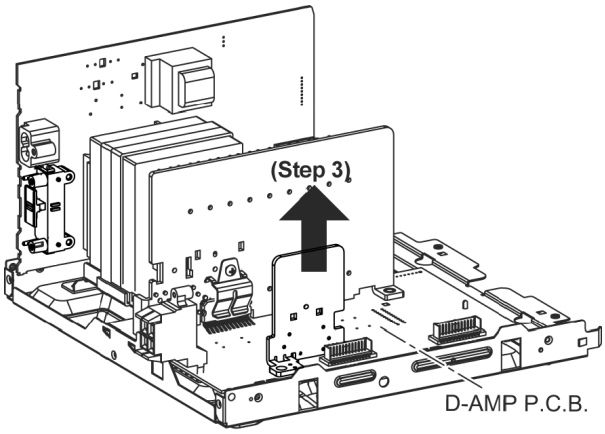

Step 4 Remove screw and IC clip.

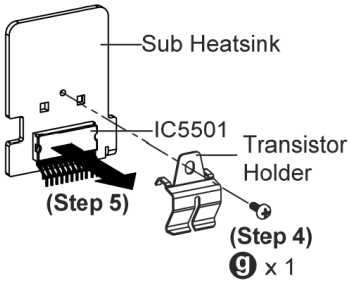

Step 5 Remove IC5501 from the sub assembly.

10.10. Disassembly of Front Panel Unit

Step 1 Remove top cabinet.

Step 2 Remove DVD/CD mechanism changer unit (Follow step 1 to 5).

Step 3 Detach FFC cables at connectors (CN2803, CN2806 & CN2807) on Main P.C.B..

Step 4 Detach cable at connector (CN5951) on SMPS P.C.B..

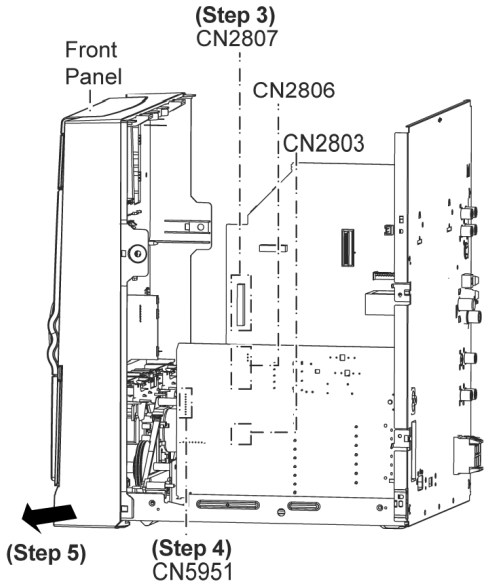

Step 5 Bent the front panel unit slightly forward as arrow shown.

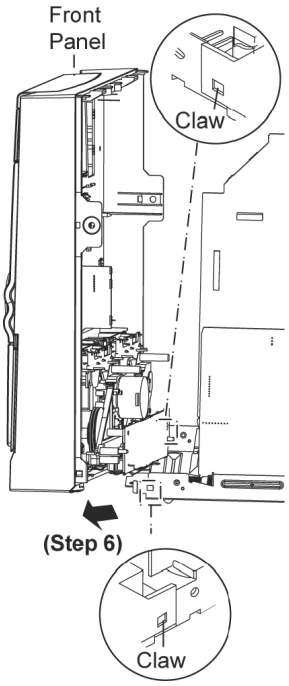

Step 6 Release 2 claws outwards.

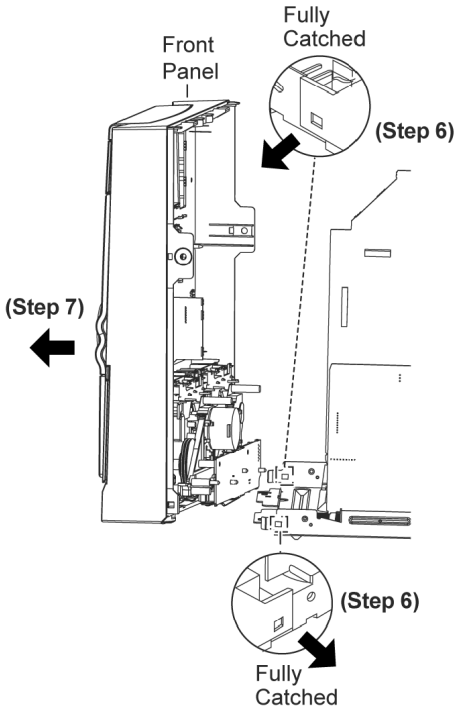

Step 7 Remove the front panel.

Note: Ensure 2 claws located at the bottom chassis is seated into the 2 slots at bottom of front panel for 2 catches (one on each side) of bottom chassis to be aligned to front panel's slot. Assembly is secured upon hearing clicking sound.

10.11. Disassembly for Mic P.C.B.

Step 1 Remove top cabinet.

Step 2 Remove DVD/CD mechanism changer unit (Follow step 1 to 5).

Step 3 Remove front panel.

Step 4 Remove 1 screw at Mic P.C.B..

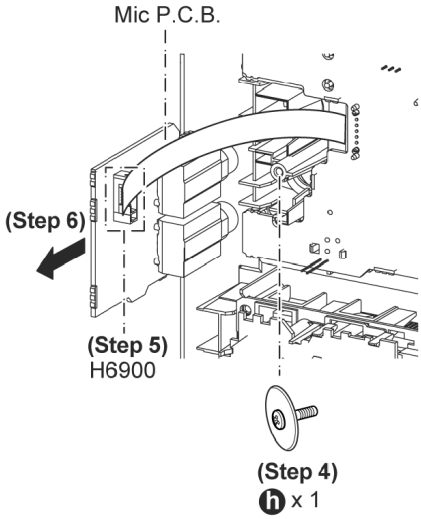

Step 5 Detach cable at connector (H6900) on Mic P.C.B..

Step 6 Remove MIC P.C.B.

10.12. Disassembly for Panel P.C.B.

Step 1 Remove top cabinet.

Step 2 Remove DVD/CD mechanism changer unit (Follow step 1 to 5).

Step 3 Remove front panel.

Step 4 Remove Mic P.C.B..

Step 5 Remove 6 screws at Panel P.C.B..

Step 6 Release 2 catches.

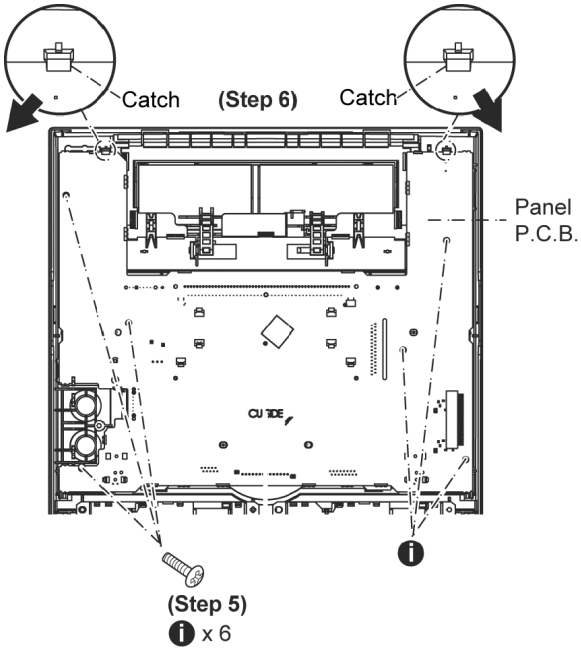

Step 7 Detach FFC cable (CN6401) on Panel P.C.B..

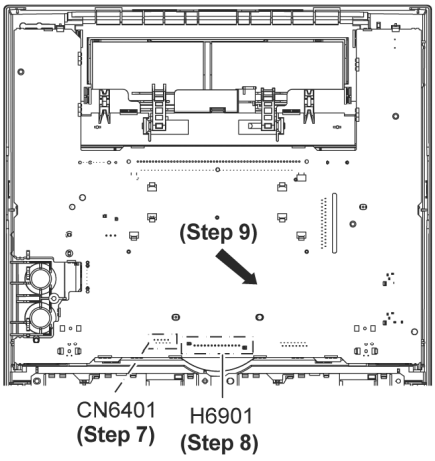

Step 8 Detach cable at connector (H6901) on Panel P.C.B..

Step 9 Remove Panel P.C.B..

- **Disassembly of CD lid.**

  Step 1 Lift the spring sideward.

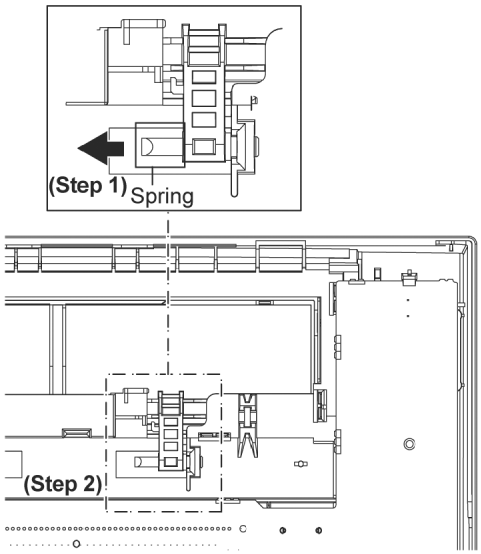

Step 2 Remove Lid.

Caution Note: Do not misplace the spring.

10.13. Disassembly of Tact Switch P.C.B.

Step 1 Remove top cabinet.

Step 2 Remove DVD/CD mechanism changer unit (Follow step 1 to 5).

Step 3 Remove front panel.

Step 4 Remove Mic P.C.B..

Step 5 Remove Panel P.C.B..

Step 6 Remove 6 screws at Tact Switch P.C.B..

Step 7 Remove the volume knob.

Step 8 RemoveTact Switch P.C.B..

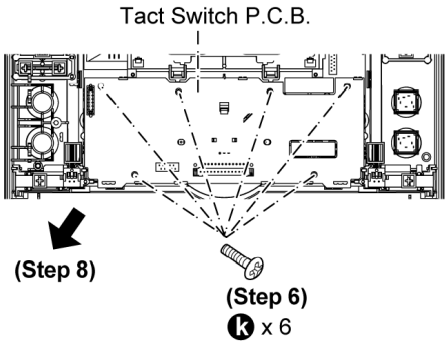

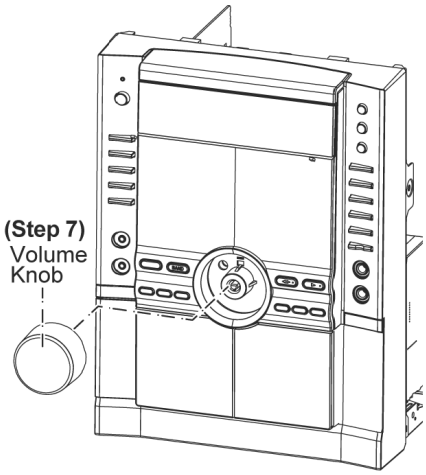

10.14. Disassembly of Deck mechanism unit

Step 1 Remove top cabinet.

Step 2 Remove DVD/CD mechanism changer unit (Follow step 1 to 5).

Step 3 Remove front panel.

Step 4 Detach FFC cable (CN971) on Deck Mechanism P.C.B.

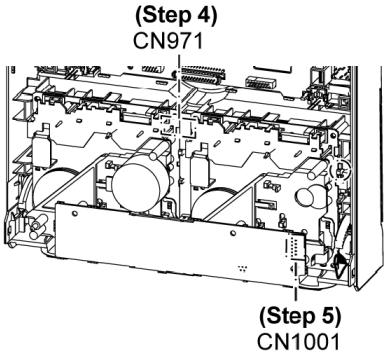

Step 5 Detach FFC cable (CN1001) on Deck P.C.B.

Step 6 Remove 5 screws.

Step 7 Push the lever upward (The cassette door for both deck1/2 will open).

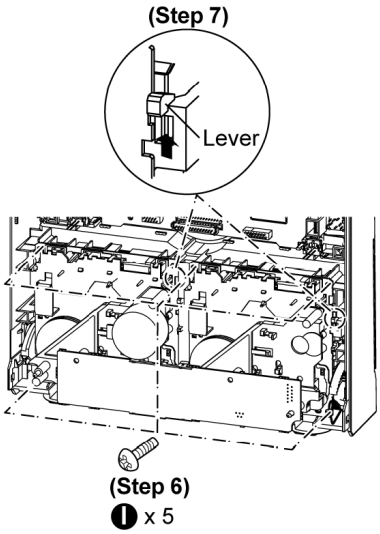

Step 8 Tilt the deck mechanism unit in the direction of arrow (1), and then remove it in the direction of arrow (2).

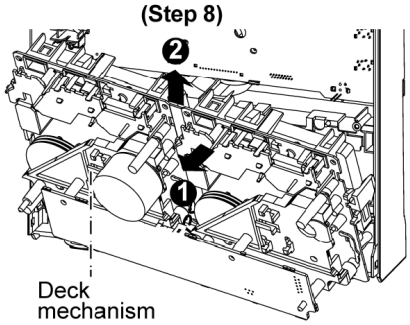

Note: For disassembly of parts for deck mechanism unit, refer to Section 10.16.

10.15. Disassembly of Deck P.C.B.

Step 1 Remove top cabinet.

Step 2 Remove DVD/CD mechanism changer unit (Follow step 1 to 5).

Step 3 Remove front panel.

Step 4 Remove 2 screws.

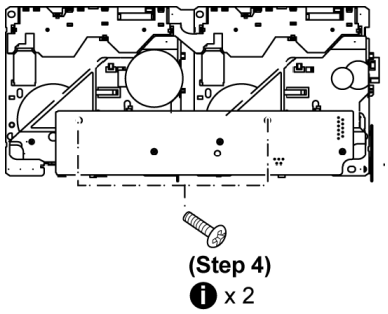

Step 5 Desolder wire at deck motor terminals (M1).

Step 6 Detach FFC cable (CN1001) on Deck P.C.B..

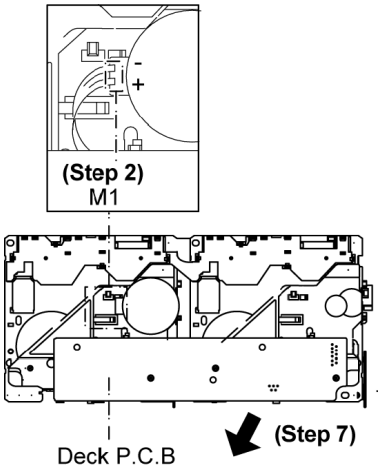

Step 7 Remove Deck P.C.B.

10.16. Disassembly for Deck Mechanism

Step 1 Remove top cabinet.

Step 2 Remove DVD/CD mechanism changer unit (Follow step 1 to 5).

Step 3 Remove front panel.

Step 4 Remove deck mechanism unit.

Step 5 Remove Deck P.C.B..

10.16.1. Replacement of Pinch Roller and Head Block

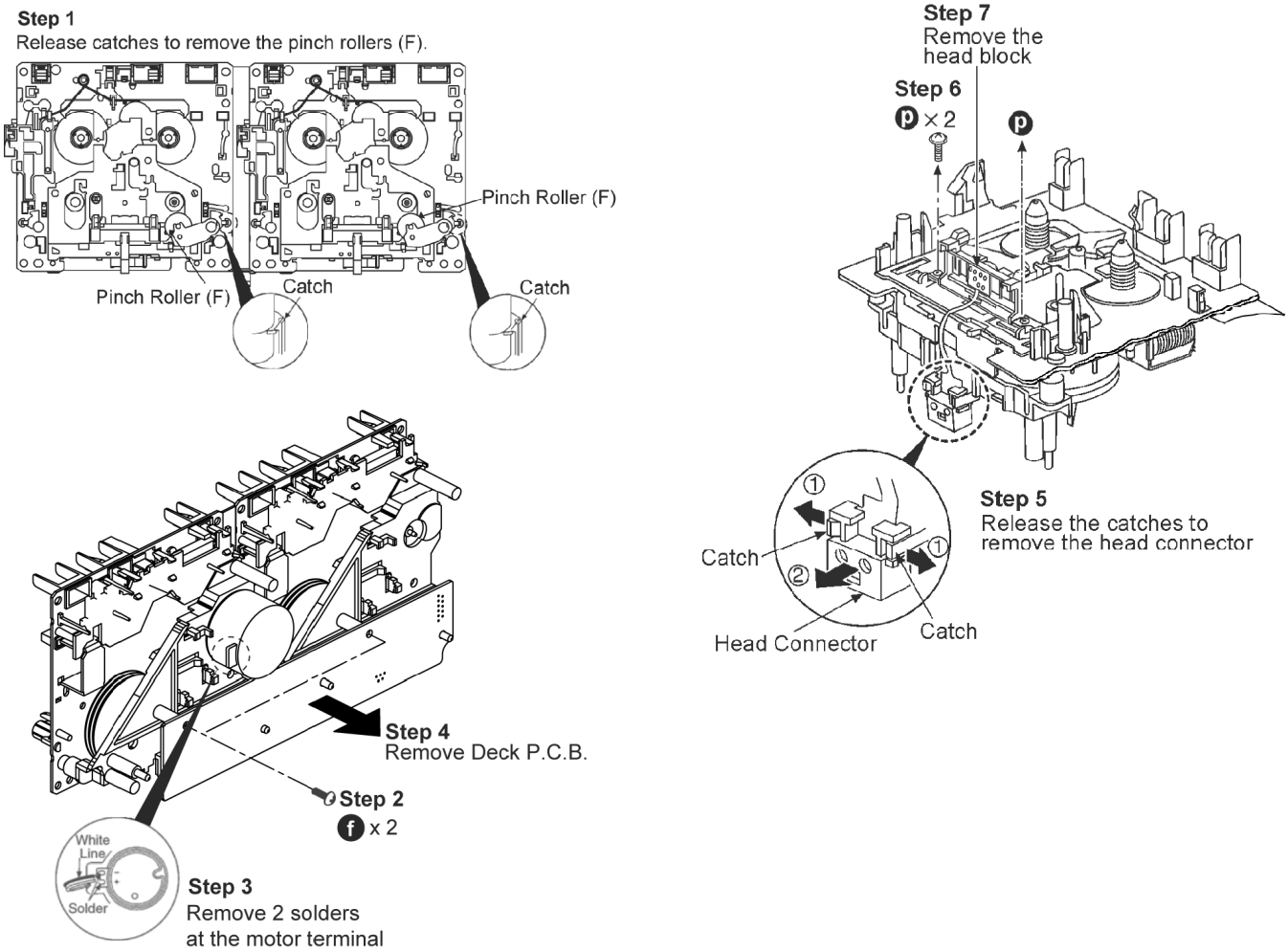

10.16.2. Replacement of Motor, Capstan Belt A, Capstan Belt B, and Winding Belt

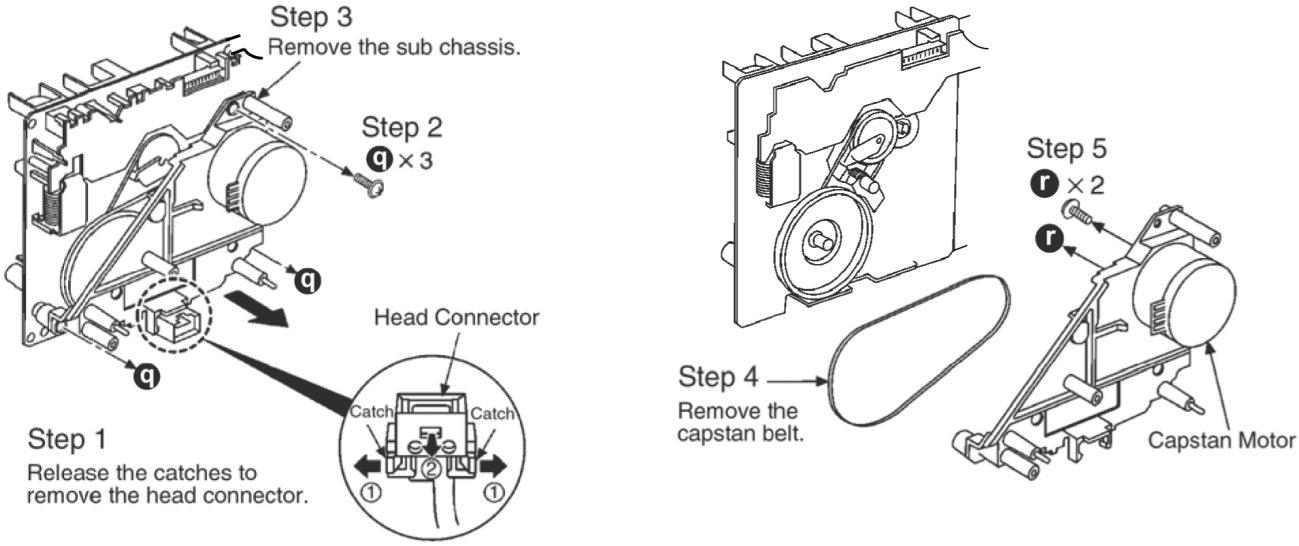

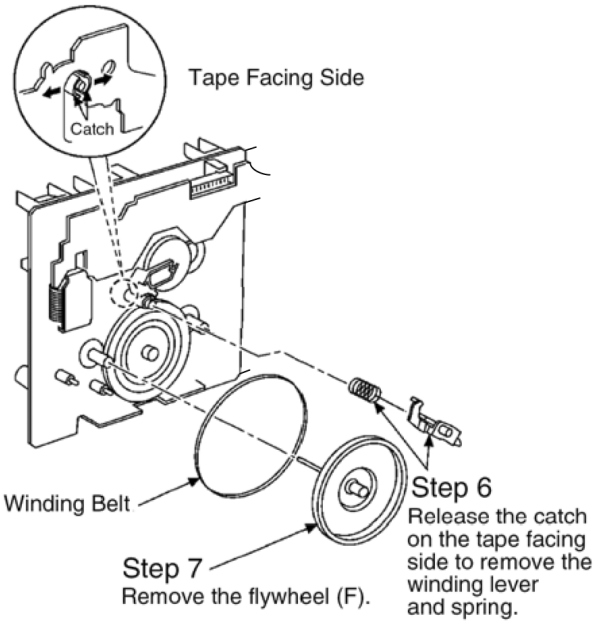
Tape Facing Side
Catch
Winding Belt
Step 6
Release the catch on the tape facing side to remove the winding lever and spring.
Step 7
Remove the flywheel (F).

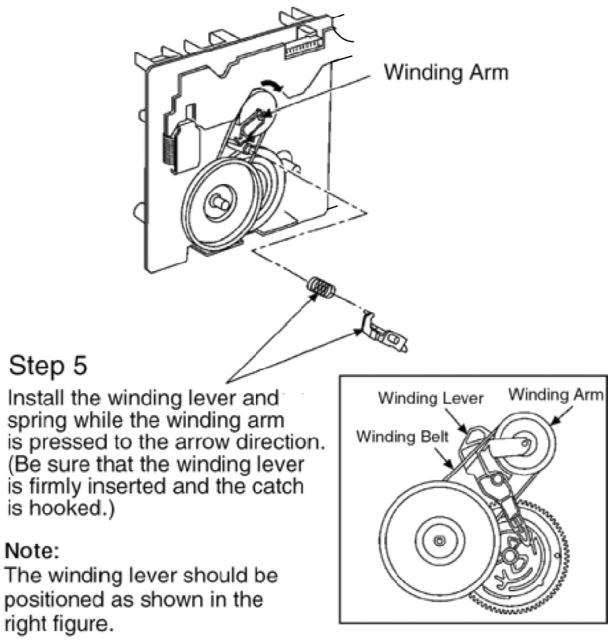
Winding Arm
Step 5
Install the winding lever and spring while the winding arm is pressed to the arrow direction. (Be sure that the winding lever is firmly inserted and the catch is hooked.)
Note:
The winding lever should be positioned as shown in the right figure.
Winding Lever
Winding Arm
Winding Belt

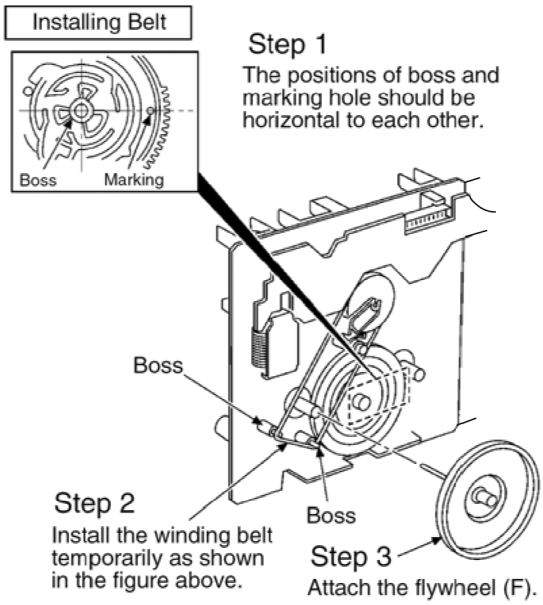
Installing Belt
Boss
Marking
Step 1
The positions of boss and marking hole should be horizontal to each other.
Boss
Step 2
Install the winding belt temporarily as shown in the figure above.
Boss
Step 3
Attach the flywheel (F).

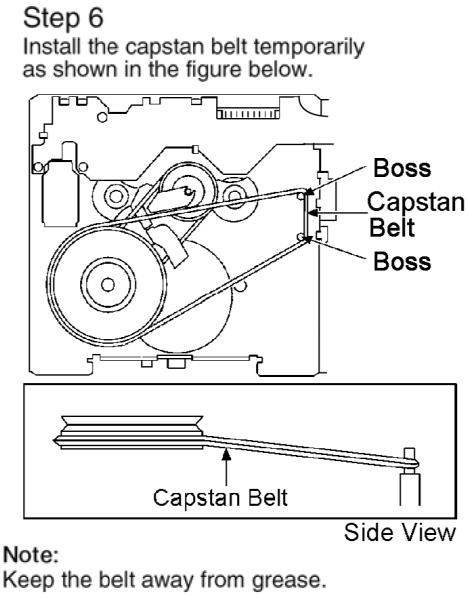
Step 6
Install the capstan belt temporarily as shown in the figure below.
Boss
Capstan Belt
Boss
Capstan Belt
Side View
Note:
Keep the belt away from grease.

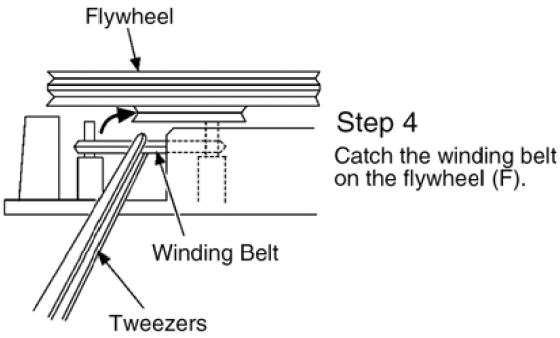
Flywheel
Step 4
Catch the winding belt on the flywheel (F).
Winding Belt
Tweezers

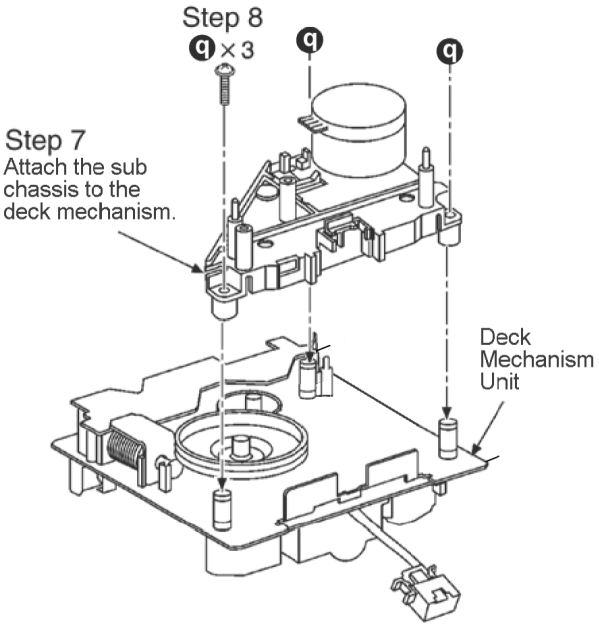
Step 8
q × 3
q
q
Step 7
Attach the sub chassis to the deck mechanism.
Deck Mechanism Unit

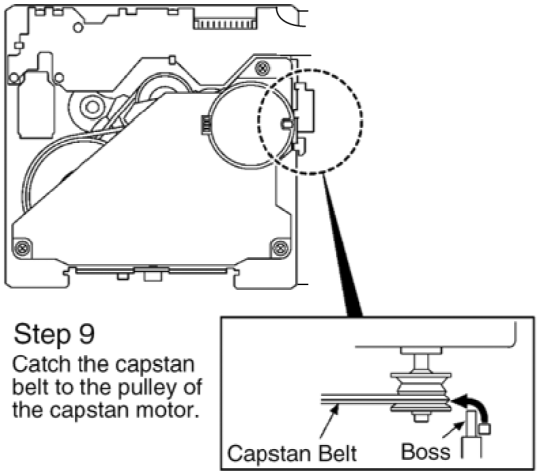

10.17. Disassembly of Traverse Unit

Step 1 Remove top cabinet.

Step 2 Remove DVD/CD mechanism changer unit (Follow step 1 to 5).

Important notes: Ensure all the trays are in the "STOCK" position before proceeding to the disassemble of traverse unit. For procedures to set the trays in "STOCK" position, please refer to original Service Manual for CRS1D, Section 4.3. Setting the trays in "STOCK" position, Order No. MD0603065A3.

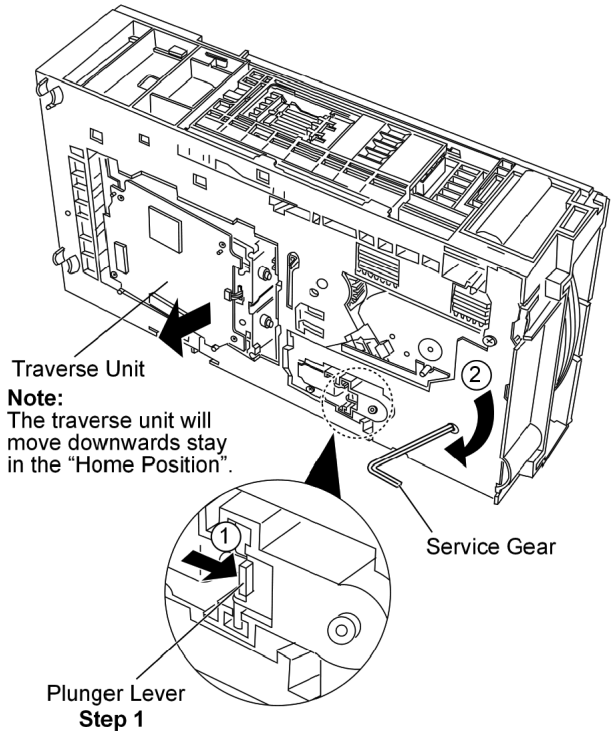

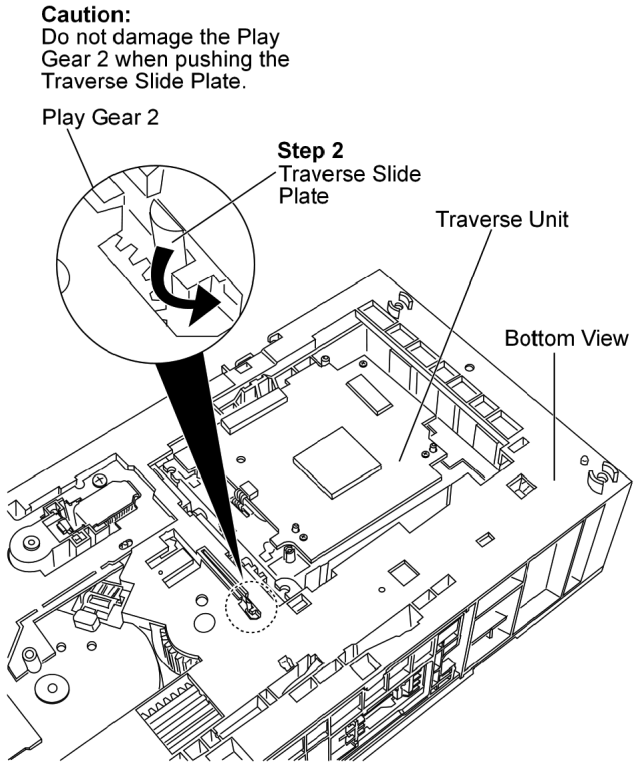

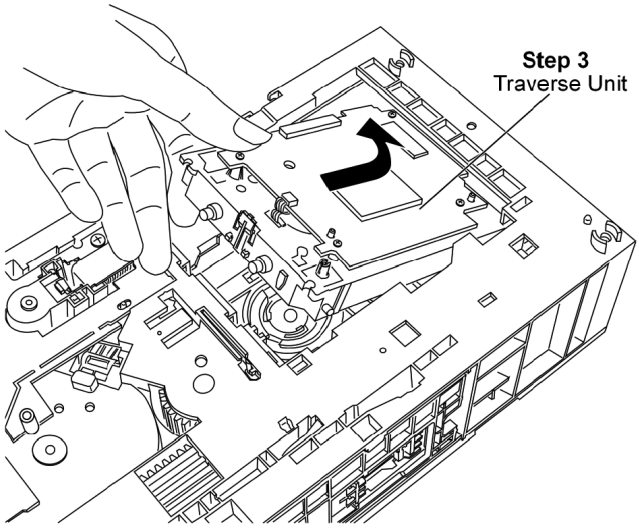

- Assembly of Traverse Unit

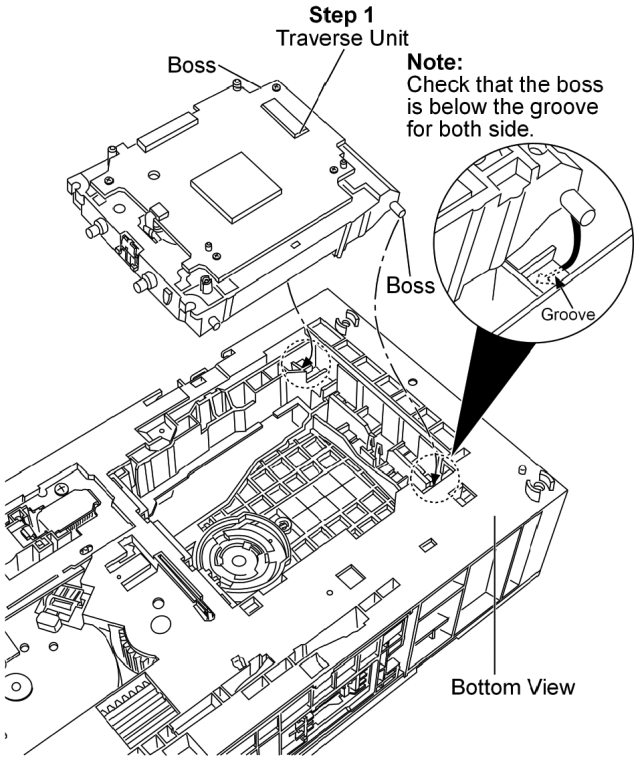

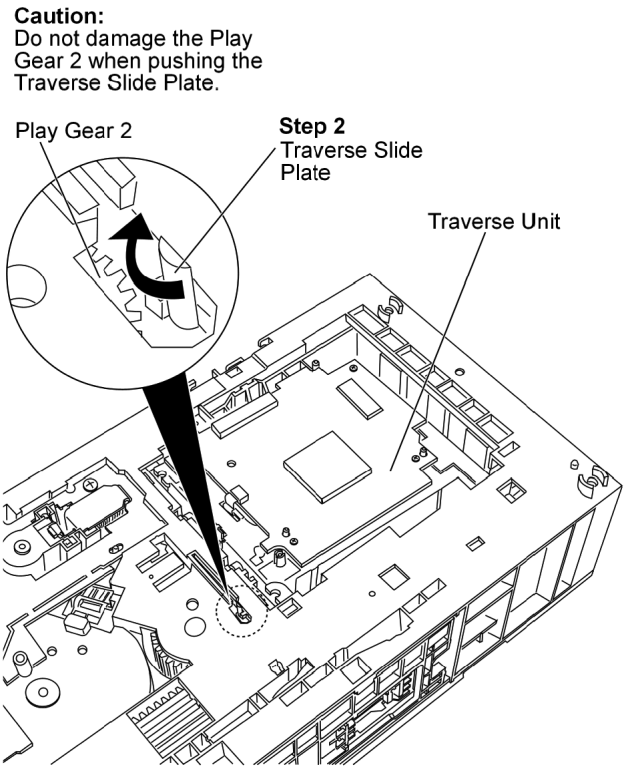

10.17.1. Disassembly of Middle Chassis

Step 1 Detach FFC cable.

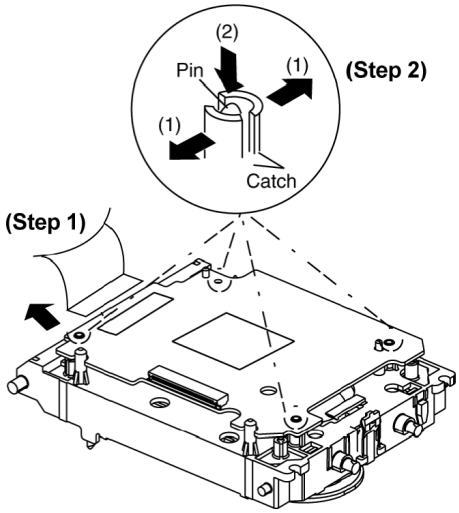

Step 2 Widening the catch, push the fixed pin in.

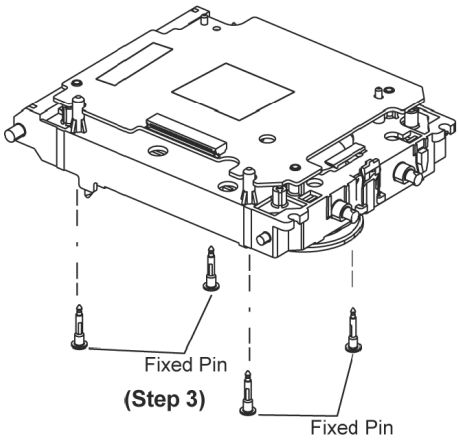

Step 3 Remove the 4 fixed pins.

Caution Note: Keep the fixed pins in safe location for assembling.

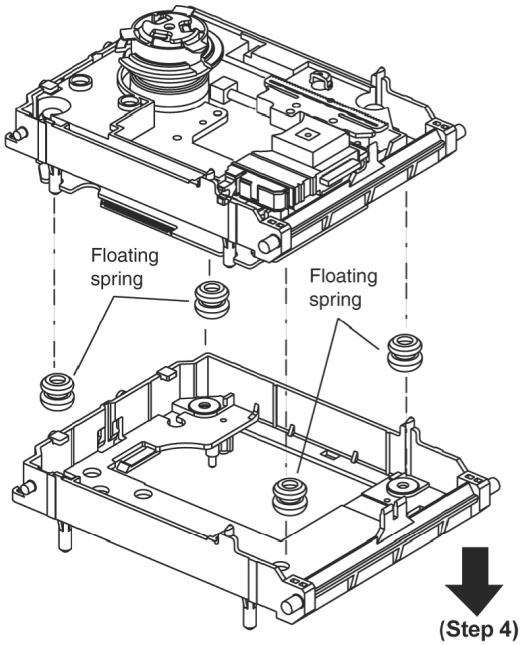

Step 4 Remove the Middle Chassis.

Caution Note: As floating springs (4 pieces) come off at the same time, be careful not to lose them.

10.18. Disassembly of DVD Module P.C.B.

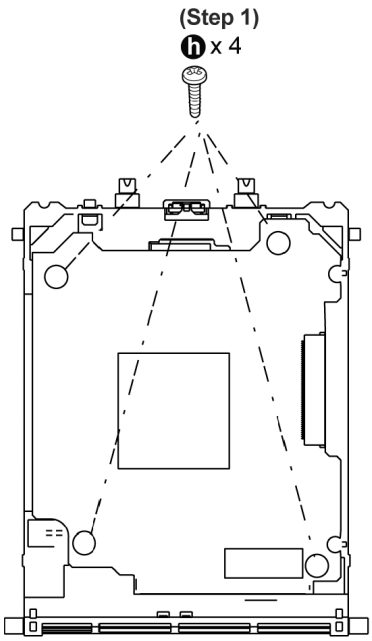

Step 1 Remove 4 screws.

Step 2 Flip the DVD Module P.C.B. over.

Step 3 Detach FFC cable.

Step 4 Remove DVD Module P.C.B..

10.19. Disassembly of Deck Mechanism P.C.B.

Step 1 Remove top cabinet.

Step 2 Remove DVD/CD mechanism changer unit (Follow step 1 to 5).

Step 3 Remove front panel.

Step 4 Remove deck mechanism unit.

Step 5 Remove Deck P.C.B..

Step 6 Remove 1 screw.

Step 7 Desolder plunger terminals.

Step 8 Release catches.

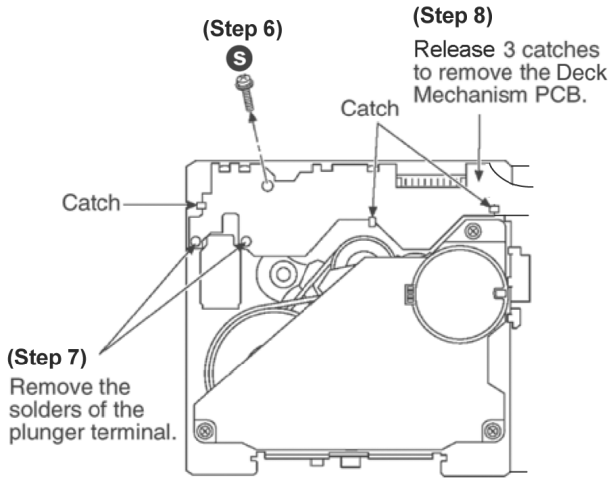

Step 9 Remove Deck Mechanism P.C.B..

10.20. Replacement for cassette lid

Step 1 Remove top cabinet.

Step 2 Remove Deck Mechanism Unit, follow **(Step 7)**.

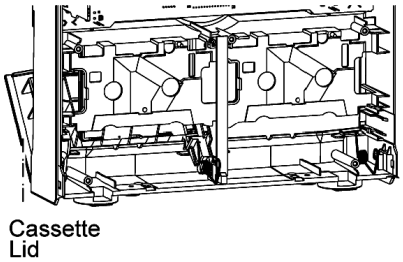

Step 3 Push up the cassette lid (L/R) in the direction of arrow. (For DECK1 and DECK2).

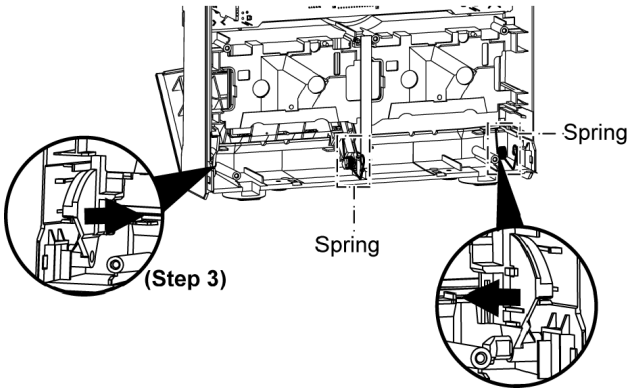

10.21. Rectification for tape jam problem

Step 1 Remove top cabinet.

Step 2 If a cassette tape cannot be removed from the deck (the tape is caught by the capstan or pinch roller during playback or recording), rotate the flywheel F in the direction of the arrow to remove it.

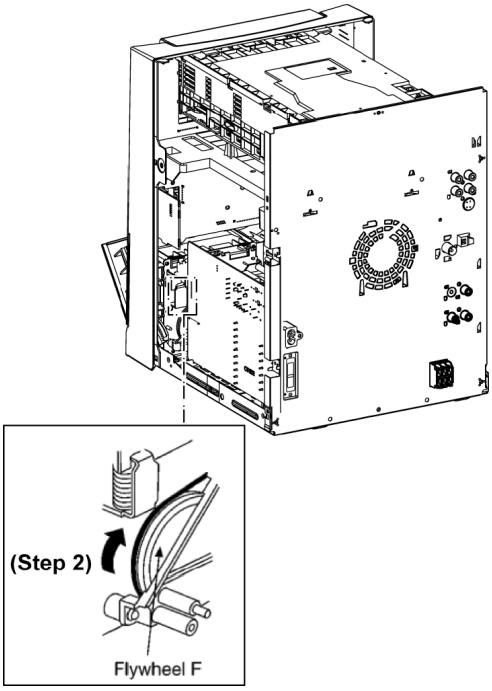

Step 3 Push the lever upward and open the cassette lid.

Remove the cassette tape.

Note: Follow 10.20 Disassembly of cassette lid **(Step1)** to **(Step 3)**. Remove the cassette tape.

11 Service Positions

Note: For description of the disassembly procedures, see the Section 10.

11.1. Checking and Repairing of Main P.C.B.

1. Disassembly of Top Cabinet

Remove 6 screws on the sides of top cabinet.

Remove 5 screws at rear panel

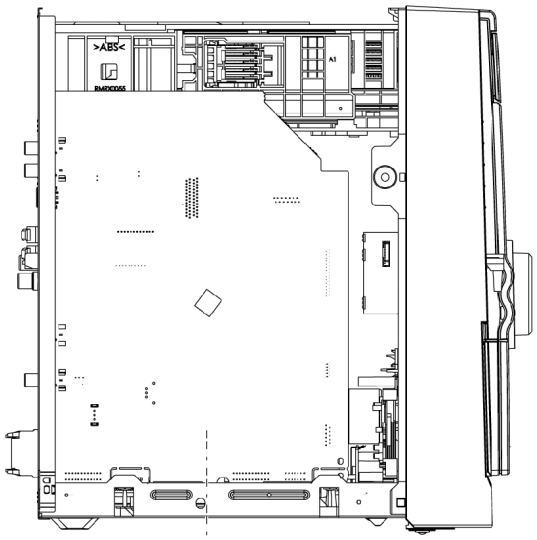

11.2. Checking and Repairing of SMPS P.C.B.

1. Disassembly of Top Cabinet

Remove 6 screws on the sides of top cabinet.

Remove 5 screws at rear panel

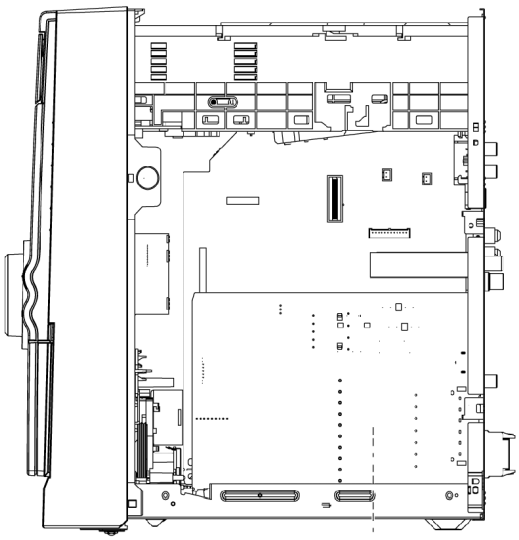

11.3. Checking and Repairing of Panel P.C.B.

1. Disassembly of Top Cabinet

Remove 6 screws on the sides of top cabinet.

Remove 5 screws at rear panel.

↓

2. Disassembly DVD/CD Mechanism Changer Unit

Remove 2 screws at rear panel.

Detach FFC cables at connector CN2801 and CN2805 (on Main P.C.B.)

Release 2 claws.

↓

3. (A) Remove Rear Panel (For GC only)

Remove 8 screws.

(B) Remove Rear Panel (For GS/GCS/ GCT only)

Remove 10 screws.

↓

4. Connect DVD/CD Mechanism Changer Unit

Connect FFC cable between FP8101 and CN2801 on Main P.C.B.
Connect FFC cable between CN1 and CN2805 on Main P.C.B.

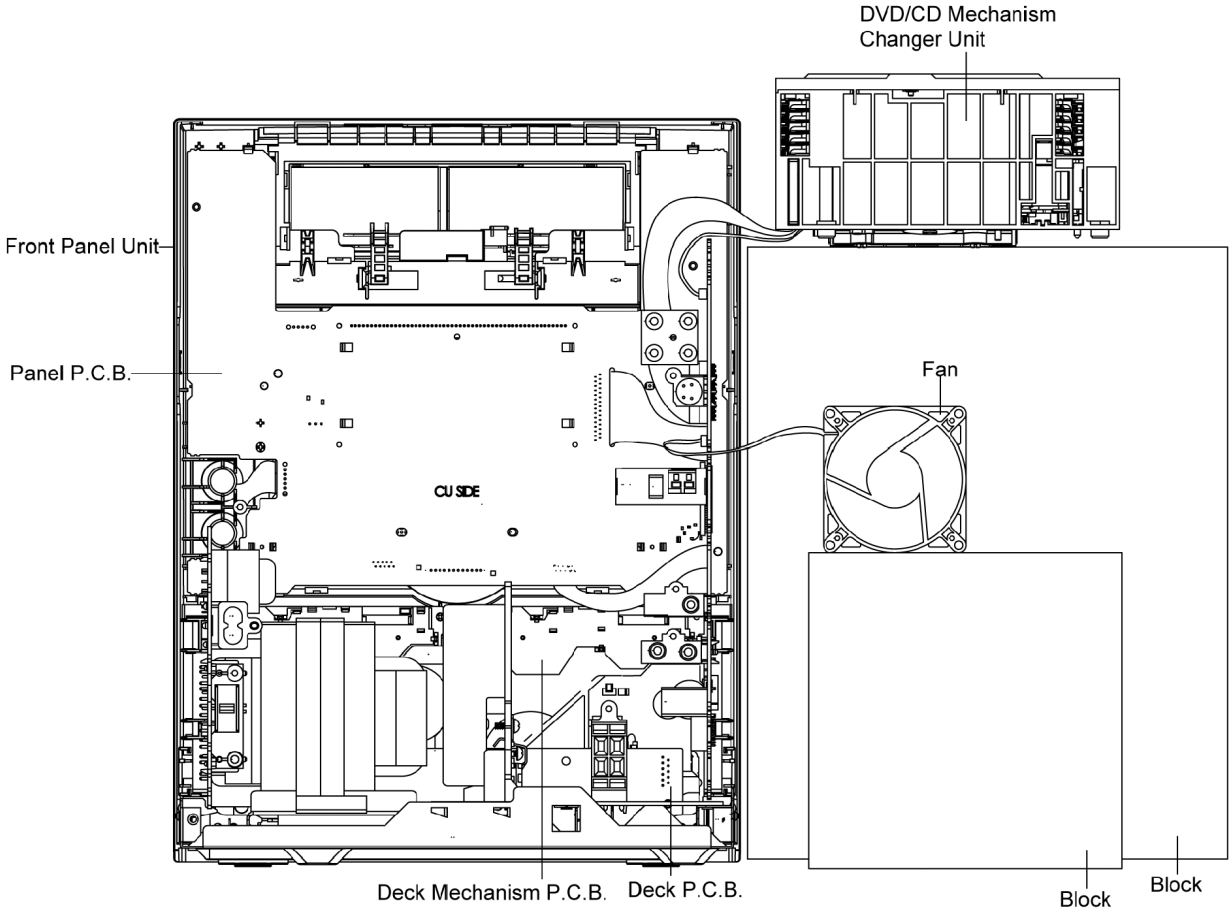

11.4. Checking and Repairing of D-Amp P.C.B., Deck P.C.B. & Deck Mechanism P.C.B.

1. Disassembly of Top Cabinet

Remove 6 screws on the sides of top cabinet.

Remove 5 screws at rear panel.

↓

2. Disassembly DVD/CD Mechanism Changer Unit

Remove 2 screws at rear panel.

Detach FFC cables at connector CN2801 and CN2805 (on Main P.C.B.)

Release 2 claws.

↓

3. (A) Remove Rear Panel (For GC only)

Remove 8 screws.

(B) Remove Rear Panel (For GS/GCS/ GCT only)

Remove 10 screws.

↓

Detach FFC cables connectors at CN5103 and CN5102 on D-Amp P.C.B..

Detach cable at connector CN5955.

↓

4. Disassembly D-Amp P.C.B.

Remove 4 screws.

Detach cable at connector CN5950 on SMPS.

↓

5. Connect CRS1D, Main P.C.B and Transformer P.C.B.

Connect cable between H5104 and CN5950 on SMPS P.C.B.
Attach CN2808 and CN2809 on Main P.C.B. to CN5103 and CN5102 on D-Amp P.C.B.
Connect FFC cable between FP8101 and CN2801 on Main P.C.B.
Connect FFC cable between CN1 and CN2805on Main P.C.B.
Connect cable (2pin) from Main P.C.B. to CN5955 on SMPS P.C.B.

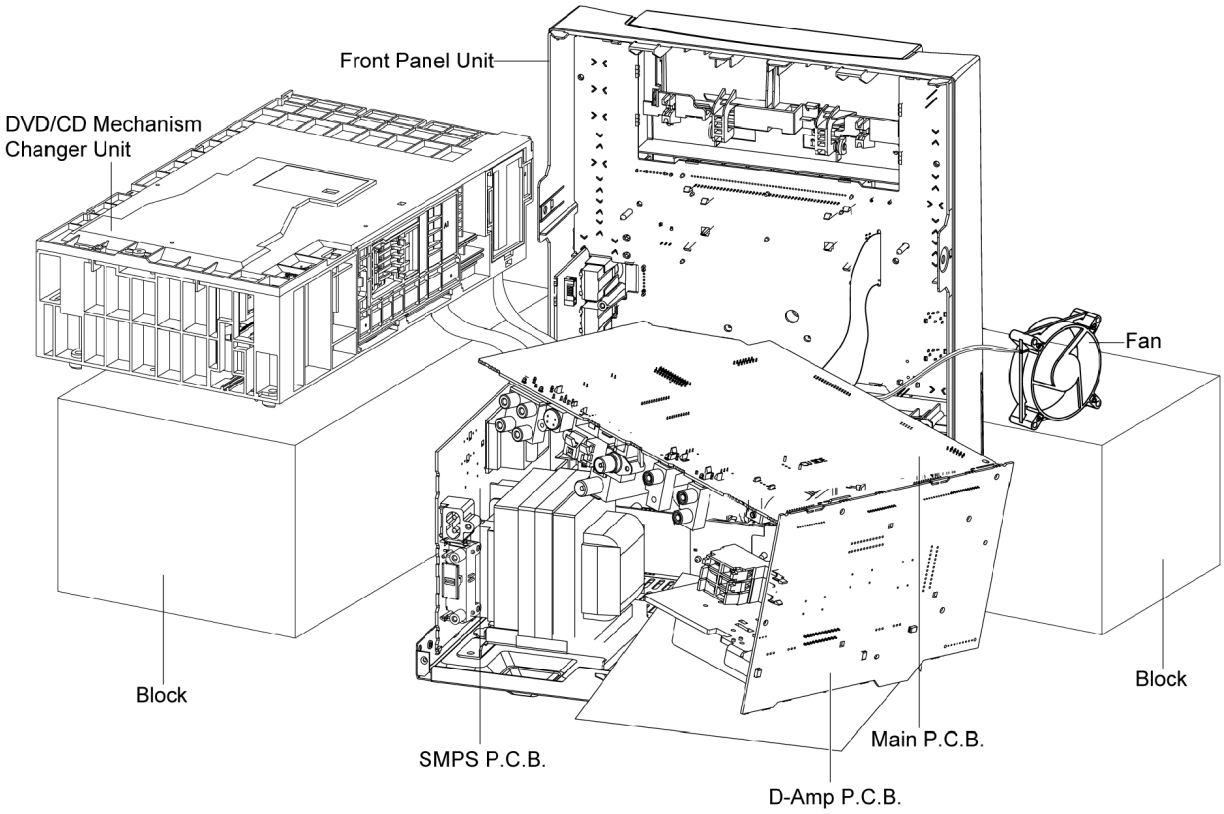

12 Adjustment Procedures

12.1. Cassette Deck Section

- Measurement Condition
  - Reverse-mode selector switch:
  - Tape edit: NORMAL
  - Make sure head, capstan and press roller are clean.
  - Judgeable room temperature 20 ± 5 °C (68 ± 9°F)
- Measuring instrument
  - EVM (DC Electronic volmeter)
  - Digital frequency counter
- Test Tape
  - Tape speed gain adjustment (3 kHz, -10 dB); QZZCWAT

12.1.1. Head Azimuth Adjustment (Deck 1/2)

Caution:

- Please replace both azimuth adjustment screw and springs simultaneously when readjusting the head azimuth. (shown in Fig. 2) Even if you wish to readjust the head azimuth without replacing the acrews and springs, a fine adjustment to the azimuth screw and spring.
- Please remove the screw-locking bond left on the head base when replacing the azimuth screw.
- If you wish to readjust the head azimuth, be sure to adjust with adhering the cassette tape closely to the mechanism by pushing the center of cassette tape with your finger. (shown in Fig. 3)

1. Playback the azimuth adjustment portion (8 kHz, -20dB) of the test tape (QZZCFM) in the forward play mode. Vary the azimuth adjustment screw until the output of the R-CH (PB OUT-R) are maximized.
2. Perform the same adjustment in the reverse play mode.
3. After the adjustment, apply screwlock to the azimuth adjusting screw.

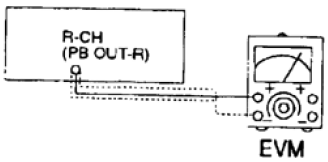

Fig. 1

Fig.2

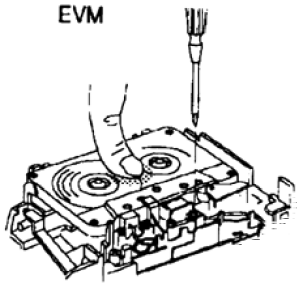

Fig. 3

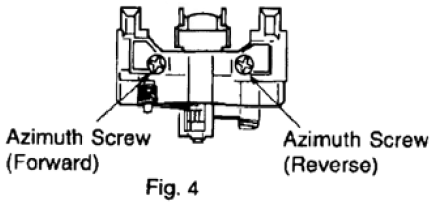

Fig. 4

12.1.2. Tape Speed Adjustment (Deck 1/2)

1. Set the tape edit button to “NORMAL” position.
2. Insert the test tape (QZZCWAT) to DECK 2 and playback (FWD side) the middle portion of it.
3. Adjust Motor VR (DECK 2) for the output value shown below.

   Adjustment target: 2940 ~ 3060 Hz (NORMAL speed)

4. After alignment, assure that the output frequency of the DECK 1 FWD are within ±60 Hz of the value of the output frequency of DECK 2 FWD.

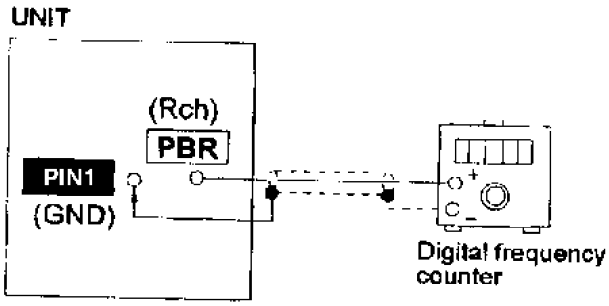

Fig. 1

12.1.3. Bias Voltage Check

1. Set the unit “AUX” position.
2. Insert the Normal blank tape (QZZCRA) into DECK 2 and the unit to “REC” mode (use ●, REC key).
3. Measure and make sure that the output is within the standard value.

Bias voltage for Deck 2 14±4mV (Normal)

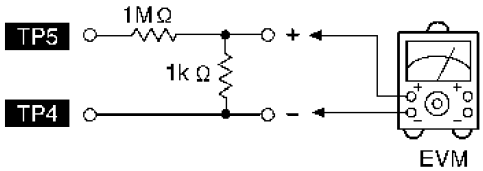

Fig. 2

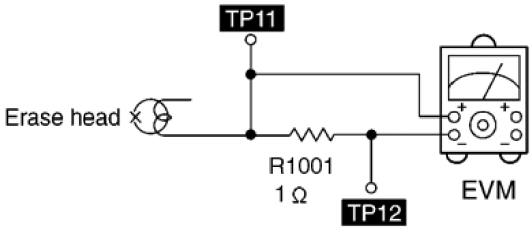

Fig. 3

12.1.4. Bias Frequency Adjustment (Deck 1/2)

1. Set the unit to “AUX” position.
2. Insert the Normal blank tape (QZZCRA) into DECK 2 and set the unit to “REC” mode (use ●, **REC** key).
3. Adjust L1002 so that the output frequency is within the standard value.

Standard Value: 89 ~ 110 kHz

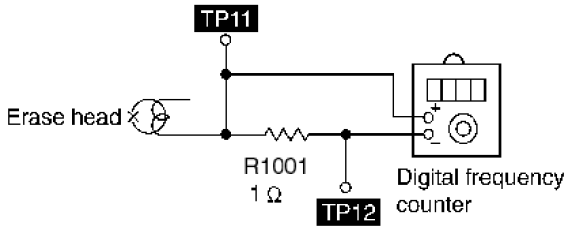

Fig. 4

12.2. Tuner Section

12.2.1. AM-IF Alignment

1. Connect the instrument as shown in Fig. 5.
2. Set the unit to AM mode.
3. Apply signal as shown in Fig. 5 from AM-SG.
4. Adjust Z2602 so that the output frequency is maximized in Fig. 6.

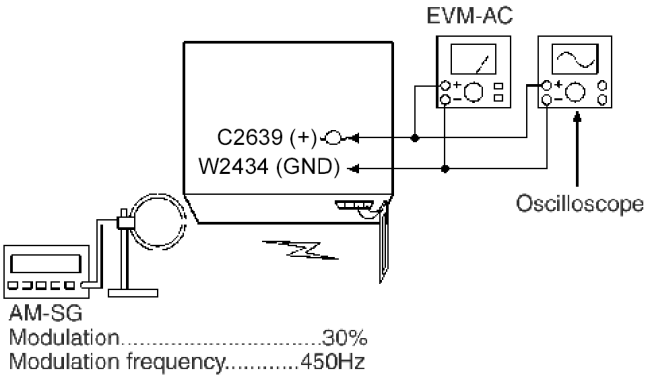

Fig. 5

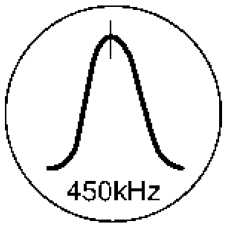

Fig. 6

12.2.2. AM RF Adjustment

1. Connect the instrument as shown in Fig. 7.
2. Set the unit to AM mode.
3. Set AM-SG to 520kHz.
4. Receive 520kHz in the unit.
5. Adjust L2601 (OSC) so that the EVM-AC is maximized.
6. Set AM-SG to 600Hz.
7. Receive 600Hz in the unit.
8. Adjust L2601 (ANT) so that the EVM-SG is maximized.
9. Set AM-SG to 520kHz.
10. Receive 520kHz in the unit.
11. Adjust L2602 (OSC) so that the EVM-DC value is with 1.1±0.5V.

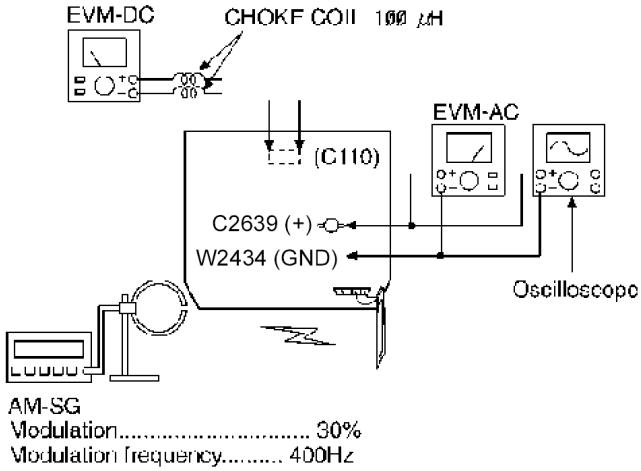

Fig. 7

12.3. Alignment Points

12.3.1. Cassette Deck Section

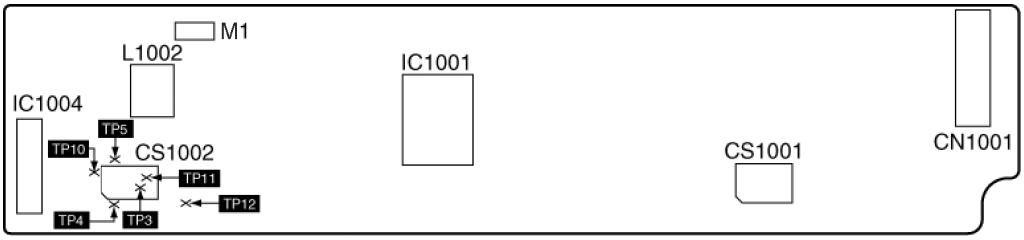

13 Illustration of ICs, Transistors and Diodes

C2CBYY000468 (100P) C0HBB0000057 (44P) MN2DS0018DP (216P) 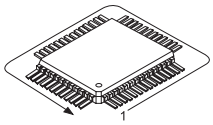	AN7348S-E1 (24P) C0EBA0000029 (4P) C1BB00000732 (32P) C0FBBK000049 (16P) C9ZB00000498 (16P) C3ABPG000145 (54P) C0ABBB000230 (8P) C0JBAB000011(14P) 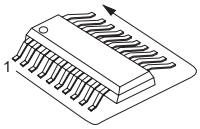		C0DBEHG00006 C1AA00000612 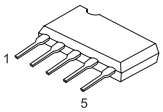	C0DAAMH00012 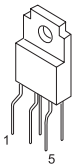	C0GBG0000048 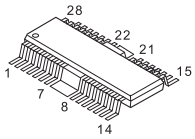
C0ABBB000244 (8P) C0CBCBD00018 (8P) 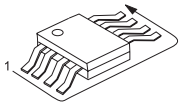	CNB13030R2AU 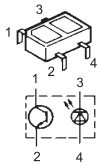	C0EBE0000455 C0JBAA000346 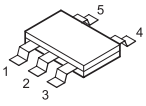	C1BA00000487 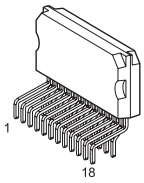	C0AABA000009 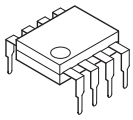	RFKWMHB0X160 (FOR GC/GS) RFKWMHB0Y160 (FOR GCS/GCT) 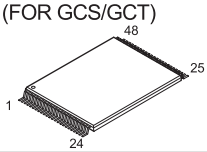
C1AB00002773 (16P) 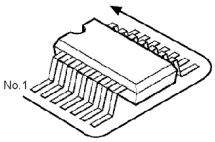	B1BCCG000023 B1BACG000048 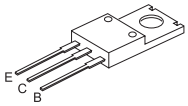	B1DEGM000026 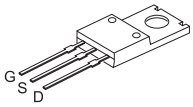	B1AACF000064 B1ACCF000094 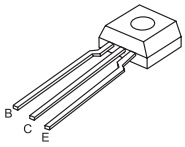	B1AAGC000007 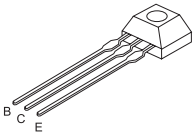	2SB0621AHA B1AAKD000012 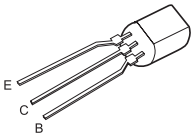
B1AAKD000014 B1ACKD000006 B1AARC000003 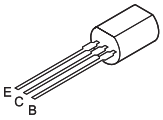	B1BACD000018 B1BCCD000019 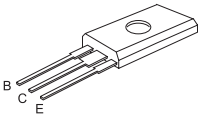	2SB0709AHL B1ABCF000176 B1GBCFJJ0051 B1GDCFNA0001 B1GBCFLL0037 B1ADCF000001 B1GDCFJJ0047 B1CFECYY0001	B1ABEB000002 2SD1819A0L 2SB1218ARL B1ADGB000008 B1GBCFJA0028 B1GBCFJN0033 B1ADCF000063 B1ABGC000001	UNR521100L UNR511V00L 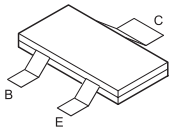	B1GACFJJ0018 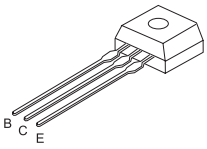
XP0621400L 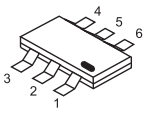	B0BC7R500001 B0BC5R600003 B0JCPD000025 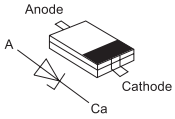	B0AACK00004 MA2C16500E MA2J72800L 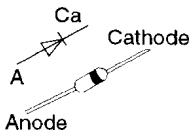	B0ACCK000005 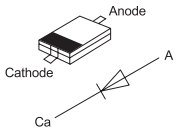	B0ACEL000004 B0BC4R300002 B0ACCE000003 MA2J11100L	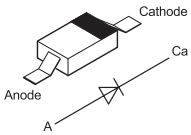
B3AEA0000083 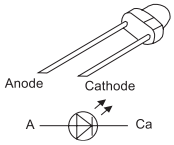	B3AAA0000803 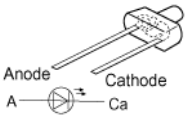	B0EAKM000117 B0EAMM000038 B0EAKM000122 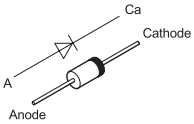	B0ADCJ000020 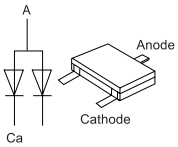	B0BA02300017 B0BA02600018 B0BA5R100013 B0BA9R600002 B0BA5R700008 B0BA6R800008 B0BA01100004 B0BA03000020	B0BA01500003 B0BA01900005 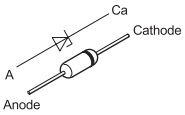
B0BC8R100004 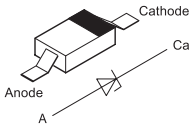	B0ADCC000002 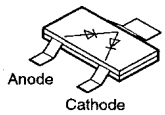	B0HCMM000019 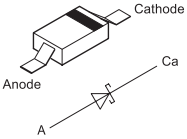	B0JAME000119 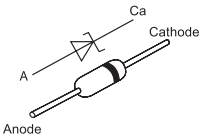	B0BC9R1A0218 B0BC5R000009 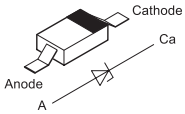	

14 Voltage and Waveform Chart

Note:

Circuit voltage and waveform described herein shall be regarded as reference information when probing defect point, because it may differ from an actual measuring value due to difference of Measuring instrument and its measuring condition and product itself.

14.1. DVD Module P.C.B.

Ref No.	IC8001																			
MODE	1	2	3	4	5	6	7	8	9	10	11	12	13	14	15	16	17	18	19	20
CD PLAY	1.3	0.9	1.5	1.2	0	3.4	1.3	1.2	0	3.4	1	1	1.1	1.8	0	3.4	1.3	1.5	0	1.3
Ref No.	IC8001																			
MODE	21	22	23	24	25	26	27	28	29	30	31	32	33	34	35	36	37	38	39	40
CD PLAY	1.8	1	2.2	0.5	1.9	2.2	1.2	1.1	1.5	1.4	3.4	0	3.4	0.7	1.9	1	2	1	2.1	1.9
Ref No.	IC8001																			
MODE	41	42	43	44	45	46	47	48	49	50	51	52	53	54	55	56	57	58	59	60
CD PLAY	2.2	1.8	0	1.3	0	3.4	3.4	3.4	3.3	0	0	3.4	1.9	2.7	3	3.3	3.3	2.9	0	0
Ref No.	IC8001																			
MODE	61	62	63	64	65	66	67	68	69	70	71	72	73	74	75	76	77	78	79	80
CD PLAY	0	0	0	0.9	0.1	1.9	1.7	0	3.4	3.3	3.4	3.4	3.4	0	0	0	0	0	0	0
Ref No.	IC8001																			
MODE	81	82	83	84	85	86	87	88	89	90	91	92	93	94	95	96	97	98	99	100
CD PLAY	0	0	1.2	3.3	0.9	2.4	0	1.9	0	0.4	1.8	3.3	1.4	1.4	1.8	1.9	1.7	1.7	1.7	1.7
Ref No.	IC8001																			
MODE	101	102	103	104	105	106	107	108	109	110	111	112	113	114	115	116	117	118	119	120
CD PLAY	0	0	0.4	0.1	0.2	1.9	3.3	0	2.3	1.7	2.7	2.7	2.7	2.7	2.7	2.7	2.5	2.5	2.5	2.5
Ref No.	IC8001																			
MODE	121	122	123	124	125	126	127	128	129	130	131	132	133	134	135	136	137	138	139	140
CD PLAY	1.9	2	1.7	1.7	0	1.7	1.7	3.4	1.9	0.9	0.4	3.3	2.4	1	1	2.4	0	0.4	0.9	0
Ref No.	IC8001																			
MODE	141	142	143	144	145	146	147	148	149	150	151	152	153	154	155	156	157	158	159	160
CD PLAY	3.4	3.4	0	0.1	0	0	3.4	1.6	1.7	1.7	0.9	1.7	0	3.4	1.5	1.6	0	1.3	3	3
Ref No.	IC8001																			
MODE	161	162	163	164	165	166	167	168	169	170	171	172	173	174	175	176	177	178	179	180
CD PLAY	2.9	3.1	2.9	3.1	0	3.4	3.2	3.1	3	3	3.1	3	0	3.4	3.2	0	3	2.9	2.7	2.7
Ref No.	IC8001																			
MODE	181	182	183	184	185	186	187	188	189	190	191	192	193	194	195	196	197	198	199	200
CD PLAY	3.3	0	1.6	3.4	1.6	0	1.3	3.3	3.2	3.2	3.3	0	1.9	0	0	3.4	1.7	0.1	0	1.5
Ref No.	IC8001																			
MODE	201	202	203	204	205	206	207	208	209	210	211	212	213	214	215	216				
CD PLAY	1.5	1.7	0.2	0	3.4	1.7	0.2	1.6	1.6	0	1.3	2.6	2.2	2.2	0.9	0.9				
Ref No.	IC8051																			
MODE	1	2	3	4	5	6	7	8	9	10	11	12	13	14	15	16	17	18	19	20
CD PLAY	3.4	2.9	3.4	3.1	3.1	0	3.1	3.3	3.4	3	3	0	2.9	3.4	2.7	3.3	3.3	3.2	3.2	1.9
Ref No.	IC8051																			
MODE	21	22	23	24	25	26	27	28	29	30	31	32	33	34	35	36	37	38	39	40
CD PLAY	1.7	0	0.1	0.2	0.2	1.6	3.4	0	1.6	1.6	1.6	1.5	0.1	0	0	-	3.4	1.6	2.7	-
Ref No.	IC8051																			
MODE	41	42	43	44	45	46	47	48	49	50	51	52	53	54						
CD PLAY	0	2.9	3.4	3.1	3.1	0	3	3.1	3.4	2.9	2.9	0	3	0						
Ref No.	IC8111									IC8151										
MODE	1	2	3	4	5	6	7	8		1	2	3	4	5						
CD PLAY	3.4	-	0.1	-	4.4	-	-	4.7		2.5	2.5	0	1.3	0.8						
Ref No.	IC8251																			
MODE	1	2	3	4	5	6	7	8	9	10										
CD PLAY	1.7	1.7	1.7	2.4	2.4	2	0	5.1	3.3	0										
Ref No.	IC8251																			
MODE	11	12	13	14	15	16	17	18	19	20	21	22	23	24	25	26	27	28	29	30
CD PLAY	2.6	2.6	2.6	2.6	5.6	5.6	4.9	4.9	0	0	11.5	11.5	1.7	1.7	1.7	1.7	0	5.1	0	0
Ref No.	IC8420																			
MODE	1	2	3	4	5	6	7	8	9	10	11	12	13	14	15	16				
CD PLAY	0	3.3	2.9	3.3	1.6	0.9	1.7	1.7	-	-	5.2	0	2.6	2.5	2.5	5.1				
Ref No.	IC8601					IC8606						IC8611								
MODE	1	2	3	4		1	2	3	4	5		1	2	3	4	5	6	7	8	
CD PLAY	3.3	1.3	0	0		3.3	3.4	0	0	-		0	0	0	0	3.4	3.4	0	3.4	
Ref No.	IC8651																			
MODE	1	2	3	4	5	6	7	8	9	10	11	12	13	14	15	16	17	18	19	20
CD PLAY	0.9	2.1	0.5	1.7	2.2	1.1	1.1	1.4	1.4	0	3.4	3.3	3.4	3.4	0.7	0.7	1.8	1	2	1
Ref No.	IC8651																			
MODE	21	22	23	24	25	26	27	28	29	30	31	32	33	34	35	36	37	38	39	40
CD PLAY	2	3.4	2.2	1.8	2.6	2.2	0	2.2	1.1	0.9	1.5	0.8	1.6	1.2	1.3	1.3	3.4	1.8	0.9	1.1
Ref No.	IC8651									IC8691						IC8695				
MODE	41	42	43	44	45	46	47	48		1	2	3	4	5		1	2	3	4	5
CD PLAY	1.2	1.3	1.6	1.4	1.5	0	3.4	1.7		3	3	0	4.6	5.1		2.7	2.7	0	4.1	5.1
Ref No.	Q8321				Q8325				Q8331				Q8335				Q8341			
MODE	E	C	B		E	C	B		E	C	B		E	C	B		E	C	B	
CD PLAY	1.1	0	0.4		1.5	0	0.9		1.1	0	0.4		1.6	0	0.9		1.5	0	0.9	
Ref No.	Q8551				Q8552				Q8561				Q8562							
MODE	E	C	B		E	C	B		E	C	B		E	C	B					
CD PLAY	0.1	4.6	0.1		0.1	4.6	4.6		1.9	3.5	1.3		3.5	4.1	4.1					
Ref No.	QR8111							QR8420				QR8571								
MODE	1	2	3	4	5	6		E	C	B		E	C	B						
CD PLAY	0.1	0.1	1.4	0.1	0.1	4.4		0	0.1	4.0		3.4	3.3	0.1						

SA-VK660GC/GCS/GS/GCT DVD MODULE P.C.B.

14.2. Main P.C.B.

Ref No.	IC2101																			
MODE	1	2	3	4	5	6	7	8	9	10	11	12	13	14	15	16	17	18	19	20
CD PLAY	4.6	4.6	4.5	4.6	4.5	4.5	4.5	4.5	4.5	4.5	4.5	4.5	4.5	4.5	4.6	0	4.9	0	9.1	3.4
STANDBY	4.6	4.6	4.6	4.6	4.5	4.5	4.5	4.5	4.5	4.5	4.5	4.5	4.5	4.5	4.6	0	4.9	0	9.1	3.4
Ref No.	IC2101																			
MODE	21	22	23	24	25	26	27	28	29	30	31	32								
CD PLAY	4.6	4.6	4.6	4.6	4.6	4.6	4.6	4.6	4.6	4.6	4.6	4.6								
STANDBY	4.6	4.6	4.6	4.6	4.6	4.6	4.6	4.6	4.6	4.6	4.6	4.6								
Ref No.	IC2103									IC2561										
MODE	1	2	3	4	5	6	7	8		1	2	3	4	5						
CD PLAY	0.1	0	0	-3.8	0	0	0.1	3.8		15.7	5.2	0	1	3.9						
STANDBY	0.1	0	0	-3.8	0	0	0.1	3.8		15.9	5.2	0	1	3.9						
Ref No.	IC2061																			
MODE	1	2	3	4	5	6	7	8												
CD PLAY	0.1	0.1	0.1	-9	0	0	0	9.1												
STANDBY	0.1	0.1	0.1	-9	0	0	0	9.1												
Ref No.	IC2701																			
MODE	1	2	3	4	5	6	7	8	9	10	11	12	13	14	15	16				
CD PLAY	5.2	2.1	2.3	1.6	5.2	1.6	0	2.1	2.1	0	2.1	2.1	1.5	1.5	1.5	2.1				
STANDBY	5.2	2.1	2.3	1.6	5.2	1.6	0	2.1	2.1	0	2.1	2.1	1.5	1.5	1.5	2.1				
Ref No.	IC2801																			
MODE	1	2	3	4	5	6	7	8	9	10	11	12	13	14	15	16	17	18	19	20
CD PLAY	2.1	0	0	5	5	0	0	0	0	1.1	0.7	4.9	2.5	0	2.5	4.9	4.9	4.9	0	2.8
STANDBY	2.1	0	0	4.9	4.9	5.2	0	0	0	1.1	0.7	4.9	2.6	0	2.5	4.9	4.9	4.9	0	2.8
Ref No.	IC2801																			
MODE	21	22	23	24	25	26	27	28	29	30	31	32	33	34	35	36	37	38	39	40
CD PLAY	5.1	5.1	0	0	0	0	4.9	0	5.1	5.1	0	0	4.5	2.2	2.5	4.1	4.5	0	4.9	0
STANDBY	5.1	5.1	0	0	0	0	4.9	0	5.1	5.1	0	0	4.5	2.2	2.5	4.2	4.6	0	4.6	4.6
Ref No.	IC2801																			
MODE	41	42	43	44	45	46	47	48	49	50	51	52	53	54	55	56	57	58	59	60
CD PLAY	0	0	0	0	0	4.8	4.9	0	4.9	4.7	4.7	4.9	4.9	0	0	0	0	4.9	4.9	4.9
STANDBY	0	0	0	0	0	4.8	4.9	0	4.9	4.7	0	4.9	4.9	0	0	0	0	4.9	4.9	4.9
Ref No.	IC2801																			
MODE	61	62	63	64	65	66	67	68	69	70	71	72	73	74	75	76	77	78	79	80
CD PLAY	0	4.9	0	0	0	0	4.9	0	0	0	0	3.6	3.7	4.4	0	0	0	4.9	0	0
STANDBY	0	4.9	0	0	0	0	5	0	0	0	0	3.6	3.7	4.4	0	0	0	4.9	0	0
Ref No.	IC2801																			
MODE	81	82	83	84	85	86	87	88	89	90	91	92	93	94	95	96	97	98	99	100
CD PLAY	0	0.1	0	4.9	0	0.1	4.9	0	1.3	0	4.5	4.6	5	2.5	0.7	0	4.1	5	4.9	0
STANDBY	0	0.1	0	4.9	0	0.1	4.9	0	1.3	0	4.5	4.6	5	2.5	0.7	0	4.2	5	4.9	0
Ref No.	IC2802									IC2804										
MODE	1	2	3	4	5	6	7	8		1	2	3	4	5	6	7	8			
CD PLAY	-	5	0	0	2.1	2.1	0	-		0	0	0	-9	0	0	0	9.1			
STANDBY	-	5	0	0	2.1	2.1	0	-		0	0	0	-9	0	0	0	9.1			
Ref No.	Q2051				Q2052							Q2061				Q2062				
MODE	E	C	B		1	2	3	4	5	6		E	C	B		E	C	B		
CD PLAY	5.1	4.6	-6.1		0	-6.1	0	0	-6.1	0		0	0	0.8		0	0	-1.5		
STANDBY	2.5	2.3	0.9		0	0.7	0	0	0.7	0		0	0	0.8		0	0	-1.5		
Ref No.	Q2063				Q2064				Q2065				Q2142				Q2143			
MODE	E	C	B		E	C	B		E	C	B		E	C	B		E	C	B	
CD PLAY	5.2	5.1	0		0	-1.6	0		0	0	-6		0	0	0		0	0	-6.1	
STANDBY	5.2	5.1	0		0	-1.4	0		0	0	-6		0	0	0		0	0	0.6	
Ref No.	Q2242				Q2243				Q2366							Q2501				
MODE	E	C	B		E	C	B		1	2	3	4	5	6		E	C	B		
CD PLAY	0	0	0		0	0	-6.1		0	-6.1	0	0	-6.1	0		0	-6.1	0		
STANDBY	0	0	0		0	0	0.6		0	0.7	0	0	0.7	0		1.4	0.8	0		
Ref No.	Q2502							Q2551				Q2552				Q2576				
MODE	1	2	3	4	5	6		E	C	B		E	C	B		E	C	B		
CD PLAY	0	-6.1	0	0	-6.1	0		15.7	-4	15.7		5.2	5.2	4.4		0	4.9	-4		
STANDBY	0	0.7	0	0	0.7	0		16	-4	15.9		5.2	5.2	4.4		0	5	-4		
Ref No.	Q2806				Q2901				Q2912				Q2913				Q2914			
MODE	E	C	B		E	C	B		E	C	B		E	C	B		E	C	B	
CD PLAY	0	4.9	0		0	0	4.5		0	0	4.3		0	12.1	0		12.1	0	12.1	
STANDBY	0	4.9	0		0	0	4.5		0	5.2	0		0	12.1	0		12.1	0	12.1	
Ref No.	Q2942				Q2943				Q2948				Q2949				Q2978			
MODE	E	C	B		E	C	B		E	C	B		E	C	B		E	C	B	
CD PLAY	12.3	0	12.3		0	12.3	0		0	0	0.2		0	5.4	0		5.1	0	5	
STANDBY	12.3	0	12.3		0	12.3	0		0	0	0.2		0	5.4	0		5.1	0	5	
Ref No.	Q2979				Q2980															
MODE	E	C	B		E	C	B													
CD PLAY	5.1	-2.5	5		1.9	5.2	2.5													
STANDBY	5.1	-2.3	5		1.9	5.2	2.5													

SA-VK660GC/GCS/GS/GCT MAIN P.C.B.

14.3. Panel P.C.B.

Ref No.	IC6601																			
MODE	1	2	3	4	5	6	7	8	9	10	11	12	13	14	15	16	17	18	19	20
CD PLAY	0.1	0.1	0.1	0.1	3	1.4	3.7	4.4	3.6	0.1	0.1	0.1	5.1	-19.1	-27.2	-24.5	-30	-16.5	-24.5	-19.2
STANDBY	0.1	0.1	0.1	0.1	3	1.5	3.7	4.4	3.6	0.1	0.1	0.1	5.1	-16.4	-24.4	-27.2	-27.2	-19.1	-13.8	-16.5
Ref No.	IC6601																			
MODE	21	22	23	24	25	26	27	28	29	30	31	32	33	34	35	36	37	38	39	40
CD PLAY	-21.8	-21.7	-18.9	-29.9	-29.9	-29.9	-21.8	-21.2	-27.2	-30.7	-30.2	-27.6	-27.6	-27.5	-27.5	-27.5	-27..5	-27.5	-27.5	-27.5
STANDBY	-19.1	-18.9	-13.5	-27	-29.8	-29.8	-19.1	-29.8	-27.1	-30.6	-30.1	-27.5	-27.5	-27.4	-27.4	-27..4	-27.5	-27.5	-27.5	-27.5
Ref No.	IC6601					IC6930														
MODE	41	42	43	44		1	2	3	4	5	6	7	8							
CD PLAY	-27.6	-27.6	5.1	0.1		0	0	0	-9	0	0	0	9.2							
STANDBY	-27.5	-27.5	5.1	0.1		0	0	0	-9	0	0	0	9.1							
Ref No.	IC6931																			
MODE	1	2	3	4	5	6	7	8	9	10	11	12	13	14	15	16				
CD PLAY	0	2.6	0	0	0.9	-	0.6	0.6	2.6	2.6	2.6	2.6	0	2.6	2.6	2.6				
STANDBY	0	2.6	0	0	0.9	-	0.6	0.6	2.6	2.6	2.6	2.6	0	2.6	2.6	2.6				
Ref No.	Q6411				Q6415				Q6421				Q6425				Q6701			
MODE	E	C	B		E	C	B		E	C	B		E	C	B		E	C	B	
CD PLAY	12.2	0	12.1		12.2	0	12.1		0.1	12.1	0		0.1	12.1	0		0.1	0.1	0	
STANDBY	12.1	0	12.1		12.1	0	12.1		0.1	12.1	0		0.1	12.1	0		0.1	0.1	0	
Ref No.	Q6702				Q6703				Q6803				Q6804				Q6805			
MODE	E	C	B		E	C	B		E	C	B		E	C	B		E	C	B	
CD PLAY	0.1	0.1	4.9		0.1	0.1	4.9		5	5	4.2		5	4.9	4.2		0.1	0.1	4.9	
STANDBY	0.1	0.1	4.9		0.1	0.1	4.9		5	5	4.2		5	4.9	4.2		0.1	0.1	4.8	
Ref No.	Q6904				Q6905				Q6906				Q6907				Q6908			
MODE	E	C	B		E	C	B		E	C	B		E	C	B		E	C	B	
CD PLAY	0	0	0.8		0	0	0.8		4.6	4.6	0		4.6	4.6	0		0	0	0.7	
STANDBY	0	0	0.8		0	0	0.8		4.6	4.6	0		4.6	4.6	0		0	0	0.7	
Ref No.	Q6909				Q6910				Q6911				Q6912				Q6913			
MODE	E	C	B		E	C	B		E	C	B		E	C	B		E	C	B	
CD PLAY	0	0	0		4.6	4.6	0		4.6	4.6	0		0	0	0.7		0	0	0	
STANDBY	0	0	0		4.6	4.6	0		4.6	4.6	0		0	0	0.7		0	0	0	

SA-VK660GC/GCS/GS/GCT PANEL P.C.B.

14.4. Damp P.C.B. & SMPS P.C.B.

Ref No.	IC5201																			
MODE	1	2	3	4	5	6	7	8	9	10	11	12	13	14						
CD PLAY	0	4.8	2.3	2.4	2.2	2.3	0	0.7	2	2.4	2.5	0.3	1.8	4.9						
STANDBY	0	0.1	0	0.1	0	0	0	0.1	0.1	0	0	0	0	0.2						
Ref No.	IC5301																			
MODE	1	2	3	4	5	6	7	8	9	10	11	12	13	14	15	16	17	18	19	20
CD PLAY	2.4	0	0	28.5	0	-28.7	-20.7	28.9	11.4	-0.1	-29	-16.2	-29.1	-0.2	11.3	29	-28.8	-28.8	0	28.6
STANDBY	0	0	0	0	0	-0.2	0	0	0	0	-0.2	0	-0.2	0	0	0	-0.2	-0.2	0	0
Ref No.	IC5301																			
MODE	21	22	23																	
CD PLAY	0	0	4.4																	
STANDBY	0	0	0.1																	
Ref No.	IC5501																			
MODE	1	2	3	4	5	6	7	8	9	10	11	12	13	14	15	16	17	18	19	20
CD PLAY	2.4	0	0	28.7	0	-28.7	-20.9	29	11.2	-0.2	-29	-16.3	-16.3	0	0	29	-28.8	-28.8	0	28.8
STANDBY	0	0	0	0	0	-0.2	0	0	0	0	-0.2	0	0	0	0	0	-0.2	-0.2	0	0
Ref No.	IC5501																			
MODE	21	22	23																	
CD PLAY	0	0	4.4																	
STANDBY	0	0	0.1																	
Ref No.	Q5101				Q5102				Q5103				Q5104				Q5108			
MODE	S	D	G		S	D	G		E	C	B		E	C	B		E	C	B	
CD PLAY	29.1	-41.5	32.6		-42	-29.1	-38.5		0	5	0		0.1	5.1	0		-41.9	-38.5	-41.4	
STANDBY	0.2	0.2	11.4		-2.3	-0.3	0		0	0.6	0.1		0.1	0.6	0		-2.3	0	-2.3	
Ref No.	Q5109				Q5110				Q5111				Q5112				Q5113			
MODE	E	C	B		E	C	B		E	C	B		E	C	B		E	C	B	
CD PLAY	-4.5	-16.9	-5.1		28.5	32.6	29		15	27.2	15.7		15.6	12	15		16	15.1	15.7	
STANDBY	0	-2.3	0		0.1	11.7	0.2		0	0.1	0.1		0.4	0.3	0.4		0.4	0	0.4	
Ref No.	Q5114				Q5115				Q5150				Q5151				Q5152			
MODE	E	C	B		E	C	B		E	C	B		E	C	B		E	C	B	
CD PLAY	11.3	15.1	11.9		5.1	5.8	8.4		4.4	0	5		4.4	0	5.1		0	4.2	0	
STANDBY	0	0.4	0.4		0.2	0	0		0.1	0	0		0.1	0	0		0	0	0.7	
Ref No.	Q5201				Q5202				Q5707				Q5708				Q5709			
MODE	E	C	B		E	C	B		E	C	B		E	C	B		E	C	B	
CD PLAY	2.5	0.5	4.8		2.5	2.4	2.2		9.1	11.5	9.7		0	-9.4	-0.6		-8.9	-32.9	-9.4	
STANDBY	0	0	0		0	0	0		0.2	0	0		0.2	-0.2	0.4		0.2	-0.2	-0.2	

SA-VK660GC/GCS/GS/GCT DAMP P.C.B.

Ref No.	Q5950				Q5951				Q5952				Q5953				Q5954			
MODE	E	C	B		E	C	B		E	C	B		E	C	B		E	C	B	
CD PLAY	5.9	10.7	6.5		-30.7	-47.5	-31.2		0	2.9	-1		0	0.1	0.8		10.9	26.5	10.1	
STANDBY	5.9	11.6	6.5		-27.8	-27.8	-27.6		0	2.9	-1.1		0	5.9	0		11.6	27.2	10.8	

SA-VK660GC/GCS/GS/GCT SMPS P.C.B.

14.5. Deck P.C.B., Deck Mechanism P.C.B. & Mic P.C.B.

Ref No.	IC1001																			
MODE	1	2	3	4	5	6	7	8	9	10	11	12	13	14	15	16	17	18	19	20
CD PLAY	0	0	0.6	5.5	5.5	2.8	0	0.3	0	1.9	7.2	0	11.3	0	0	0	0.3	0	0.2	5.4
STANDBY	0	0	0.4	0.4	0.2	0	0	0	0	0	0	0	0	0	0	0	0.3	0	0	0.1
Ref No.	IC1001																			
MODE	21	22	23	24																
CD PLAY	6.3	0.7	0	0																
STANDBY	0.3	0.3	0	0																
Ref No.	IC1004																			
MODE	1	2	3	4																
CD PLAY	7.9	0	0	0																
STANDBY	0	0	0	0																
Ref No.	Q1003				Q1004				Q1005				Q1007				Q1017			
MODE	E	C	B		E	C	B		E	C	B		E	C	B		E	C	B	
CD PLAY	0	0	0		0	14.7	0		0	14.7	0		0	0	0		0	11.3	-1.8	
STANDBY	0	0	0		0	0	0		0	0	0		0	0	0		0	-0.1	-2.9	

SA-VK660GC/GCS/GS/GCT DECK P.C.B.

Ref No.	IC951																			
MODE	1	2	3	4																
CD PLAY	4.9	5	3.9	5																
STANDBY	0	0	0	0																
Ref No.	IC971																			
MODE	1	2	3	4																
CD PLAY	2.2	5	3.9	5.1																
STANDBY	0	0	0	0																

SA-VK660GC/GCS/GS/GCT DECK MECHANISM P.C.B.

Ref No.	Q6901				Q6902				Q6903											
MODE	E	C	B		E	C	B		E	C	B									
CD PLAY	0	-	-1.8		0.1	2	0.7		6.2	8.4	6.6									
STANDBY	0	-	-1.7		0.1	2	0.7		6.2	8.4	6.6									

SA-VK660GC/GCS/GS/GCT MIC P.C.B.

14.6. Waveform Chart

WF No. IC2101-1 (PLAY) 3Vp-p(200usec/div)	WF No. IC2101-3 (PLAY) 3.2Vp-p(200usec/div)	WF No. IC2101-7,8 (PLAY) 0.2Vp-p(200usec/div)	WF No. IC2101-9 (PLAY) 0.06Vp-p(5msec/div)
WF No. IC2101-10 (PLAY) 0.05Vp-p(200usec/div)	WF No. IC2101-21,22 (PLAY) 0.02Vp-p(1msec/div)	WF No. IC2701-2 (PLAY) 0.6Vp-p(20usec/div)	WF No. IC2701-4,6 (PLAY) 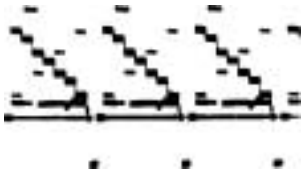 1Vp-p(20usec/div)
WF No. IC2701-8 (PLAY) 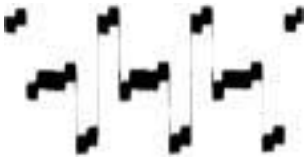 0.5Vp-p(20usec/div)	WF No. IC2701-11,12 (PLAY) 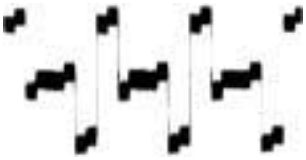 0.9Vp-p(20usec/div)	WF No. IC2701-13 (PLAY) 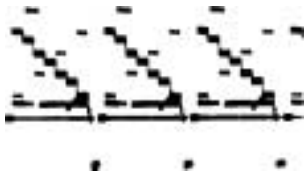 2.1Vp-p(20usec/div)	WF No. IC2701-15 (PLAY) 2.1Vp-p(20usec/div)
WF No. IC2701-16 (PLAY) 1.25Vp-p(20usec/div)	WF No. IC6601-5 (PLAY) 2.8Vp-p(100nsec/div)	WF No. IC8251-12,15,17 (PLAY) 3.4Vp-p(200usec/div)	WF No. IC8251-14 (PLAY) 0.1Vp-p(200usec/div)
WF No. IC8420-6 (PLAY) 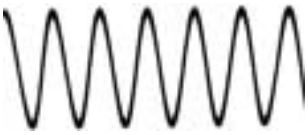 3.3Vp-p(5usec/div)	WF No. IC8420-14,15 (PLAY) 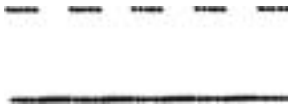 2.1Vp-p(20usec/div)		

15 Wiring Connection Diagram

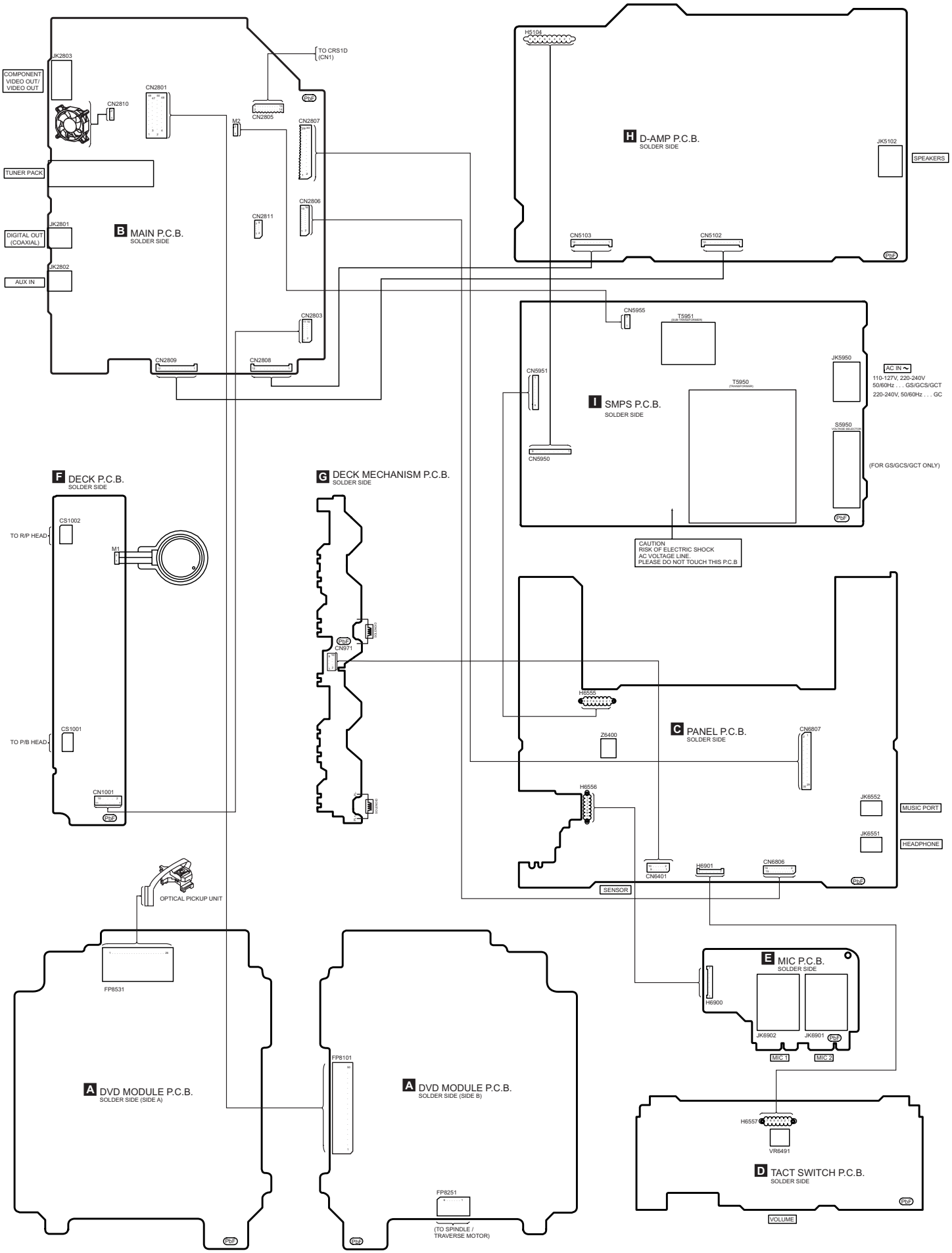

16 Block Diagram

16.1. System Control Block Diagram

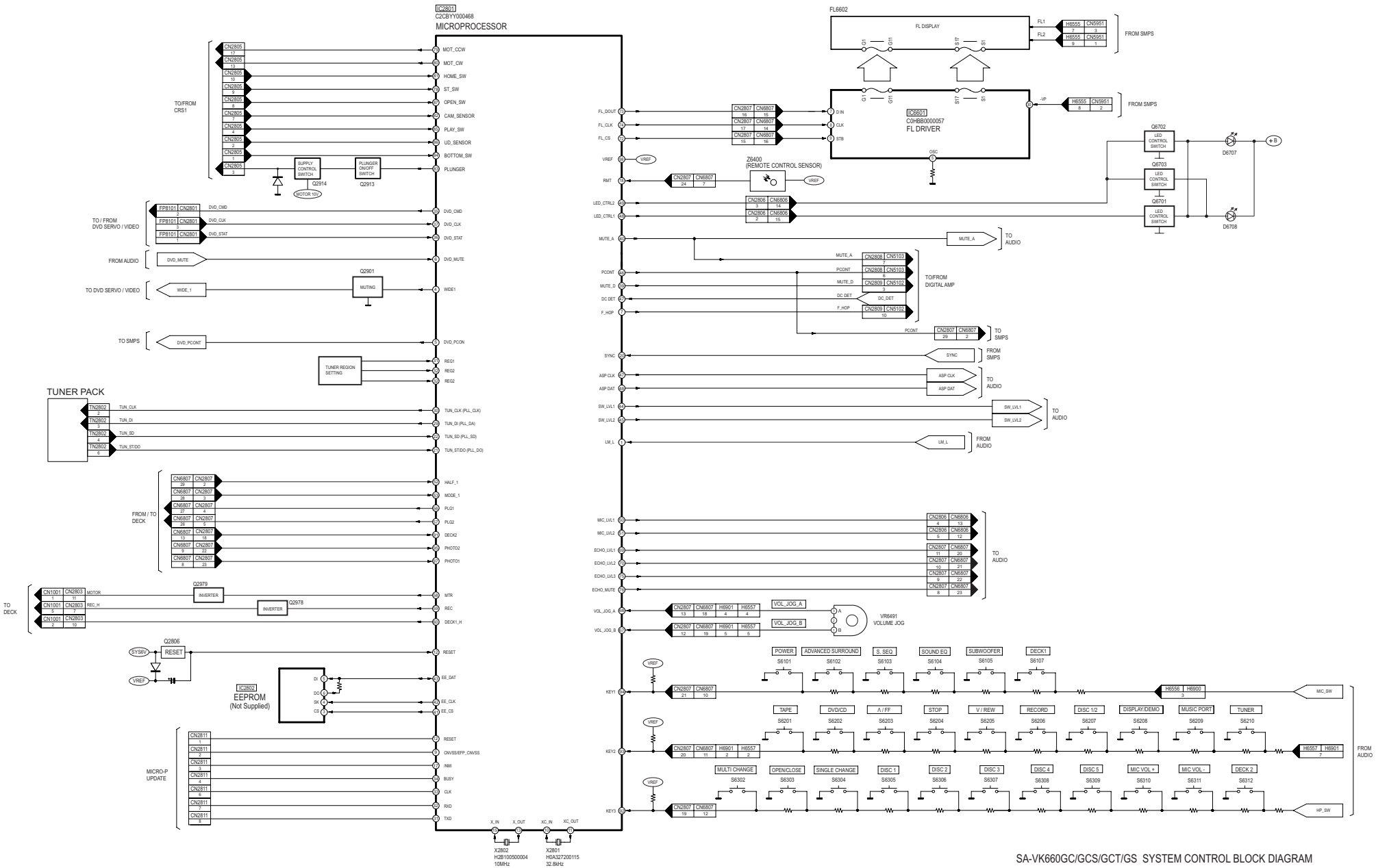

16.2. DVD Servo/ Video Block Diagram

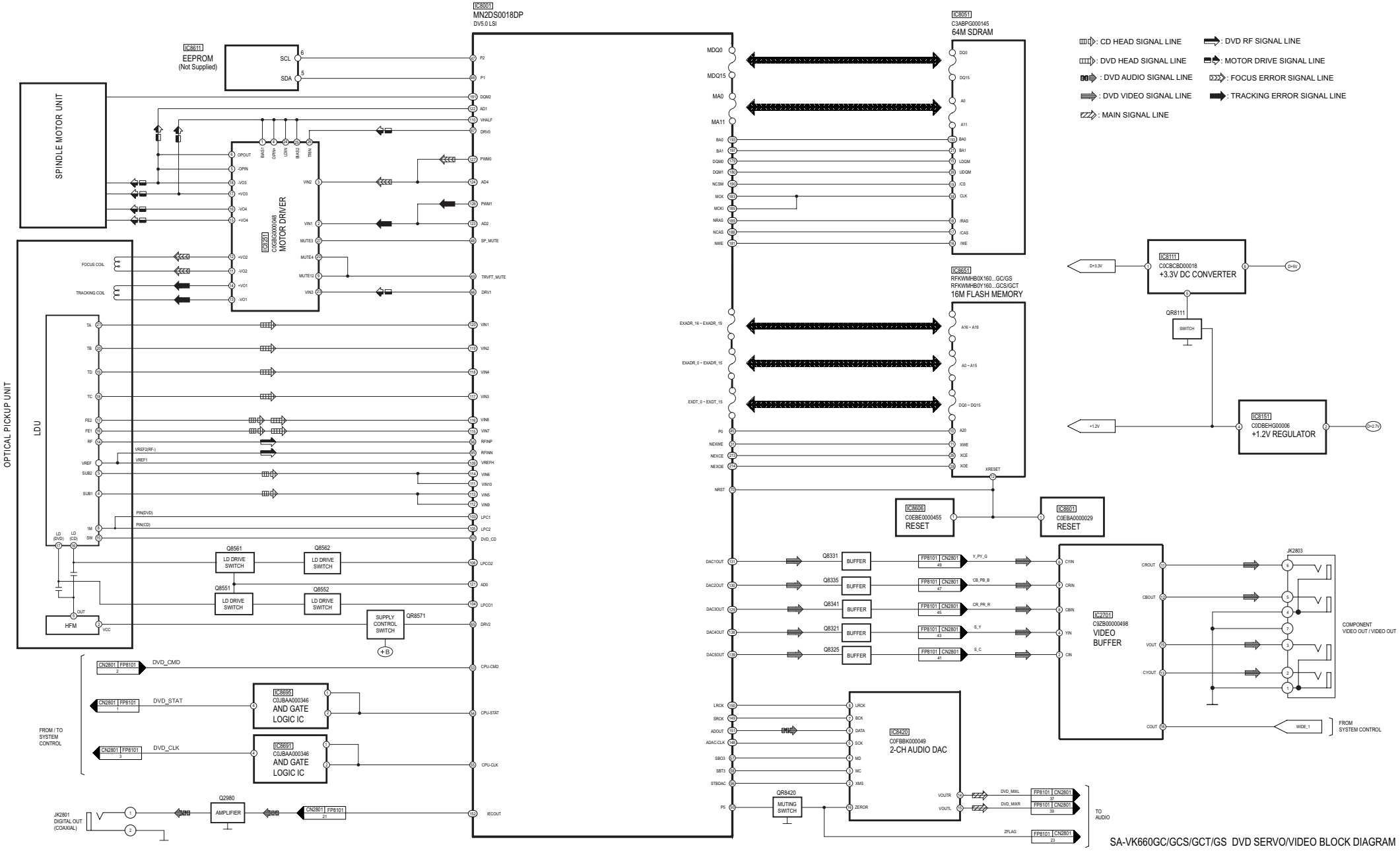

SA-VK660GC/GCS/GCT/GS DVD SERVO/VIDEO BLOCK DIAGRAM

16.3. Audio Block Diagram

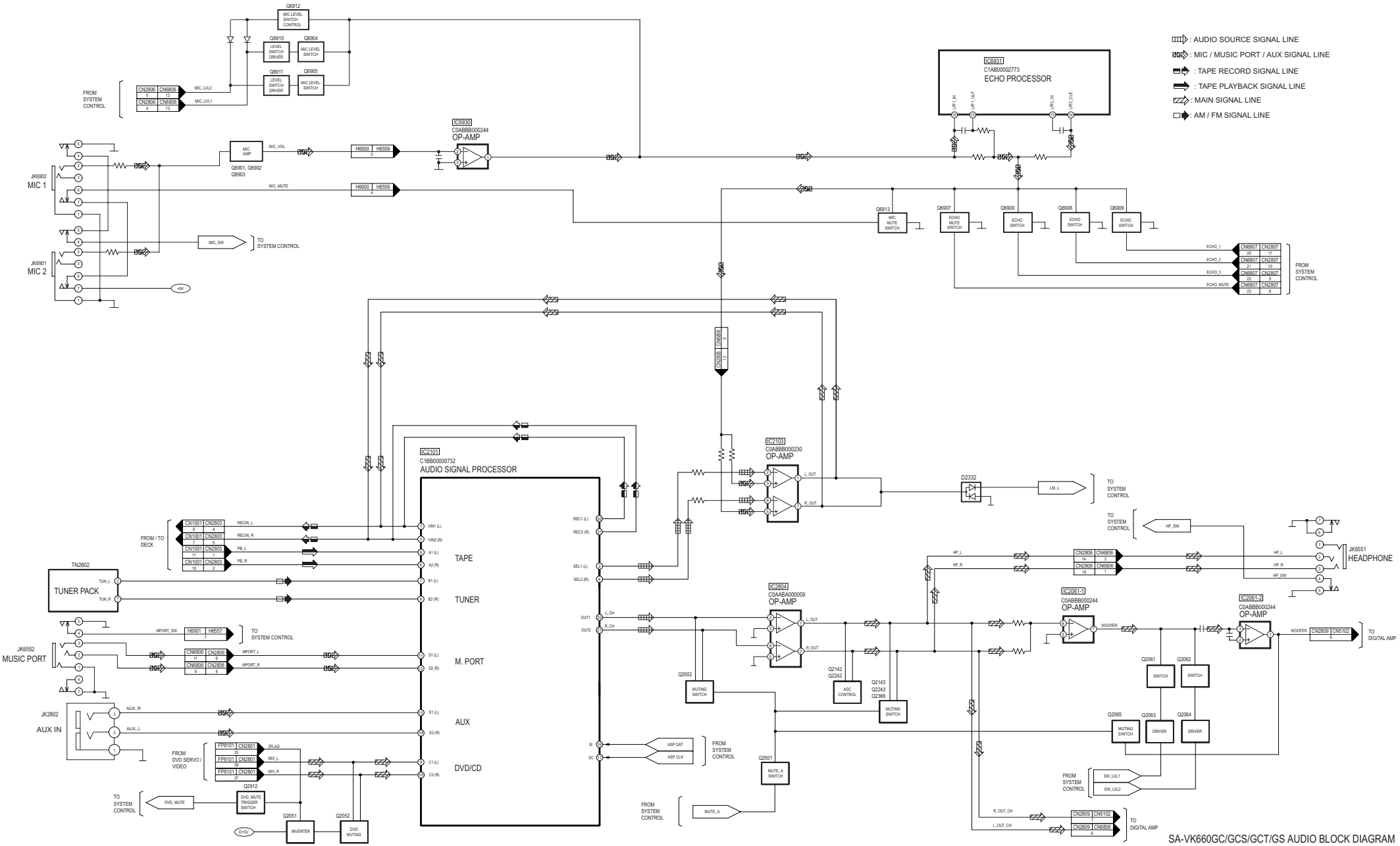

SA-VK660GC/GCS/GCT/GS AUDIO BLOCK DIAGRAM

16.4. Digital Amp Block Diagram

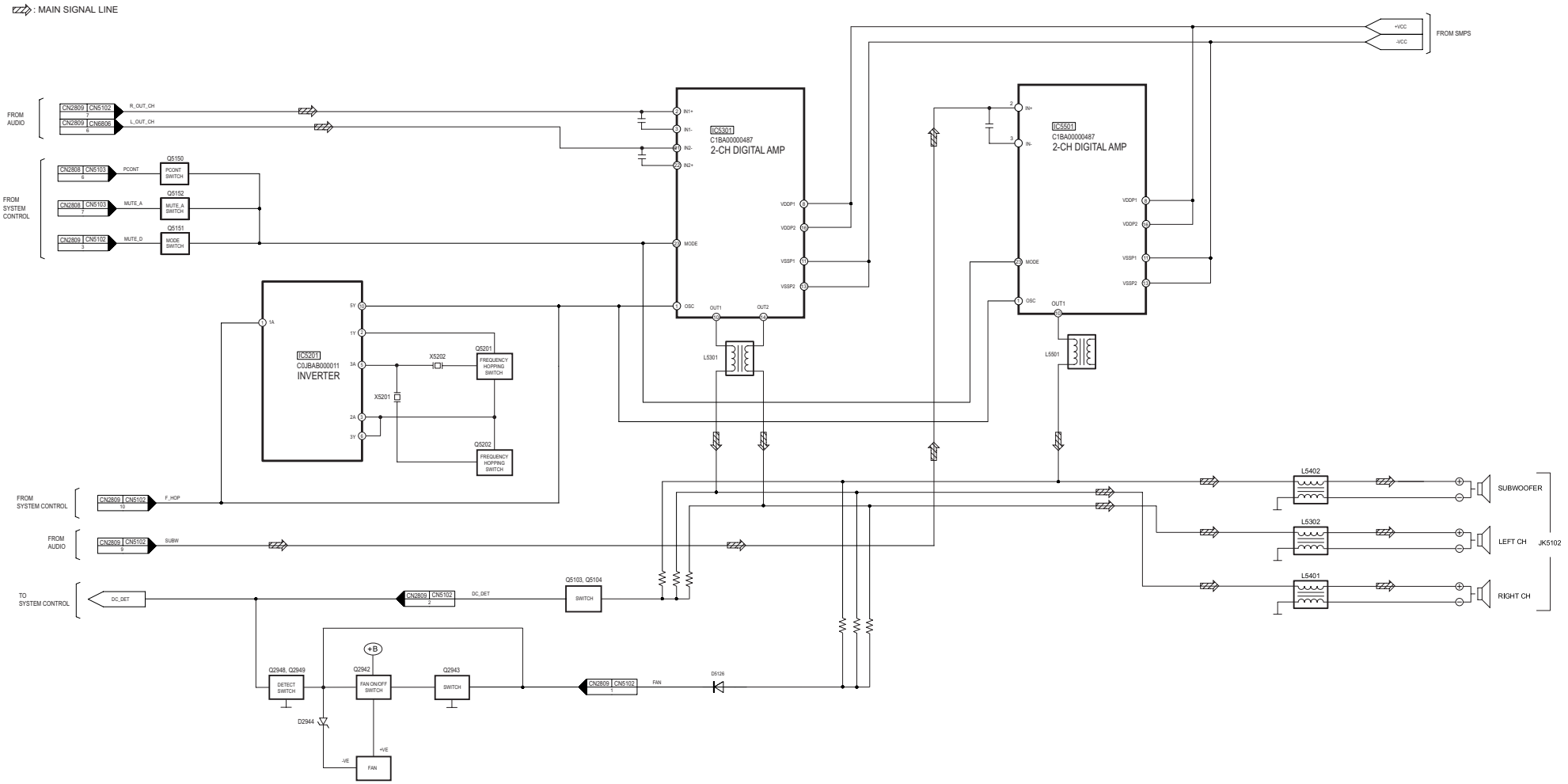

SA-VK660GC/GCS/GCT/GS DIGITAL AMP BLOCK DIAGRAM

16.5. Deck Block Diagram

: TAPE RECORD SIGNAL LINE

: TAPE PLAYBACK SIGNAL LINE

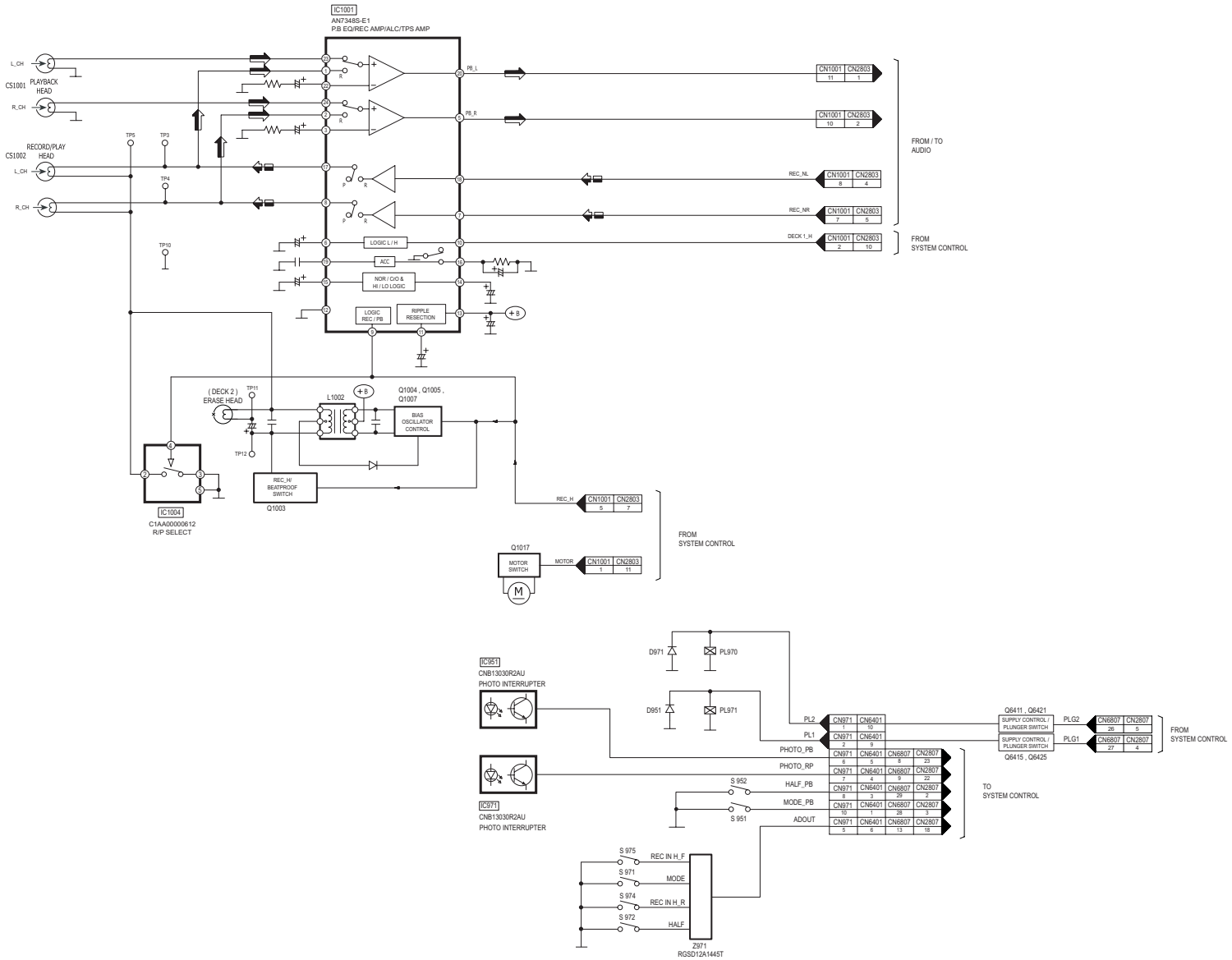

SA-VK660GC/GCS/GCT/GS DECK BLOCK DIAGRAM

16.6. SMPS Block Diagram

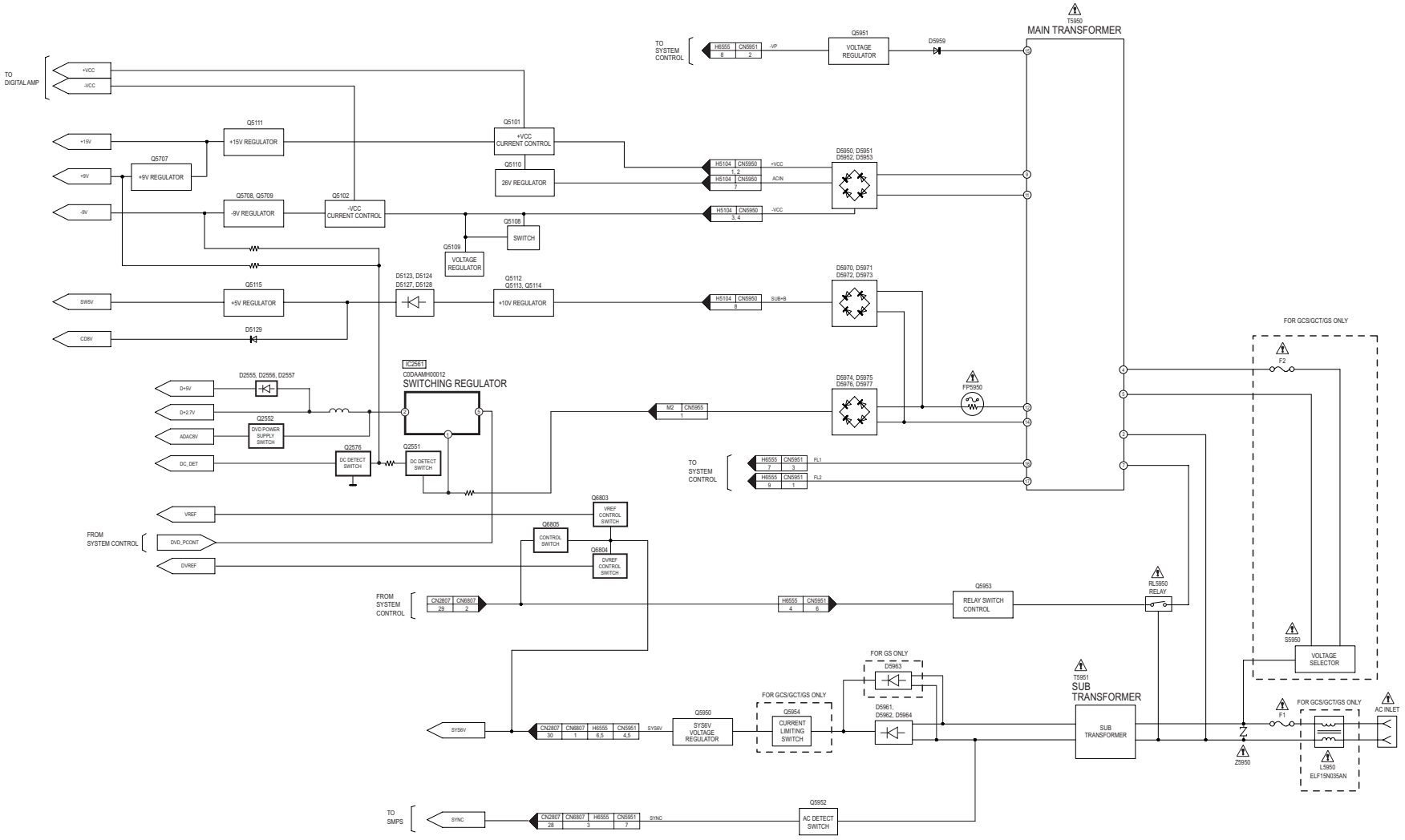

SA-VK660GC/GCS/GCT/GS SMPS BLOCK DIAGRAM

17 Schematic Diagram Notes

(All schematic diagrams may be modified at any time with the development of the new technology)

S951	: Mode Switch
S952	: Half Switch
S971	: Mode Switch
S972	: Half Switch
S974	: Recinh_R Switch
S975	: Recinh_F Switch
S5950	: Voltage Selector Switch
S6101	: Power (⏻/I) Switch
S6102	: Advanced Surround Switch
S6103	: S.SEQ Switch
S6104	: Sound EQ Switch
S6105	: Subwoofer Switch
S6107	: Deck 1 (⏏) Switch
S6201	: Tape (◀▶) Switch
S6202	: DVD/CD (▶) Switch
S6203	: FWD (▶▶I, ∧/FF) Switch
S6204	: Stop (■, STOP) Switch
S6205	: Rew (I◀◀, ∨/REW) Switch
S6206	: Rec (●, REC)Switch
S6207	: Deck 2 Switch
S6208	: Display/Demo Switch
S6209	: Music Port Switch
S6210	: Tuner Switch
S6302	: Multi Change (⏏) Switch
S6303	: Open/Close (⏏) Switch
S6304	: Single Change (⏏) Switch
S6305	: DISC 1 (1 ▶) Switch
S6306	: DISC 2 (2 ▶) Switch
S6307	: DISC 3 (3 ▶) Switch
S6308	: DISC 4 (4 ▶) Switch
S6309	: Disc 5 (5 ▶) Switch
S6310	: Mic Vol + Switch
S6311	: Mic Vol - Switch
S6312	: Deck 2 (⏏) Switch
VR6491	: VR VOLUME JOG

- **Importance safety notice :**

  Components identified by ⚠ mark have special characteristics important for safety.
  Furthermore, special parts which have purposes of fire-retardant (resistors), high-quality sound (capacitors), low-noise (resistors), etc. are used.
  When replacing any of components, be sure to use only manufacturer´s specified parts shown in the parts list.

- **Resistor**

  Unit of resistance is OHM [Ω] (K=1,000,000).

- **Capacitor**

  Unit of resistance is µF, unless otherwise noted. F=Farad, pF=Pico-Farad

- **Coil**

  Unit of inductance is H, unless otherwise noted.

- **Voltage and Signal lines:**

  : +B Signal line

  : -B Signal line

  : Main Signal line

  : FM/AM Signal line

  : Tape Record/ Motor Drive Signal line

  : Tape Playback/ DVD RF Signal line

  : Mic/ Music Port Signal line

  : DVD Video Signal line

  : DVD Audio Signal line

  : DVD Head/ Audio Source Signal line

  : CD Head Signal line

  : Tracking Error Signal line

  : Focus Error Signal line

- For GC Only

CAUTION: FOR CONTINUED PROTECTION AGAINST FIRE HAZARD, REPLACE ONLY WITH SAME TYPE F1 1.25A, 250V FUSE

RISK OF FIRE-REPLACE FUSE AS MARKED.

- For GS/ GCS/ GCT Only

CAUTION: FOR CONTINUED PROTECTION AGAINST FIRE HAZARD, REPLACE ONLY WITH SAME TYPE F1 2.5A, 250V FUSE

RISK OF FIRE-REPLACE FUSE AS MARKED.

CAUTION: FOR CONTINUED PROTECTION AGAINST FIRE HAZARD, REPLACE ONLY WITH SAME TYPE F2 1.25A, 250V FUSE

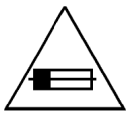

RISK OF FIRE-REPLACE FUSE AS MARKED.

FUSE CAUTION

These symbols located near the fuse indicates that the fuse used is a fast operating type. For continued protection against fire harzard, replace with the same type fuse. For fuse rating, refer to the marking adjacent to the symbol.

Ce symbole indique que le fusible utilisé est à rapide. Pour une protection permanente, n' utiliser que des fusibles de même type. Ce dernier est indiqué là qù le présent symbole est apposé.

18 Schematic Diagram

18.1. (A) DVD Module Circuit

SCHEMATIC DIAGRAM - 1

A DVD MODULE CIRCUIT

: CD HEAD SIGNAL LINE
: DVD RF SIGNAL LINE
: DVD AUDIO SIGNAL LINE
: FOCUS ERROR SIGNAL LINE
: +B SIGNAL LINE
: DVD HEAD SIGNAL LINE
: MOTOR DRIVE SIGNAL LINE
: DVD VIDEO SIGNAL LINE
: TRACKING ERROR SIGNAL LINE

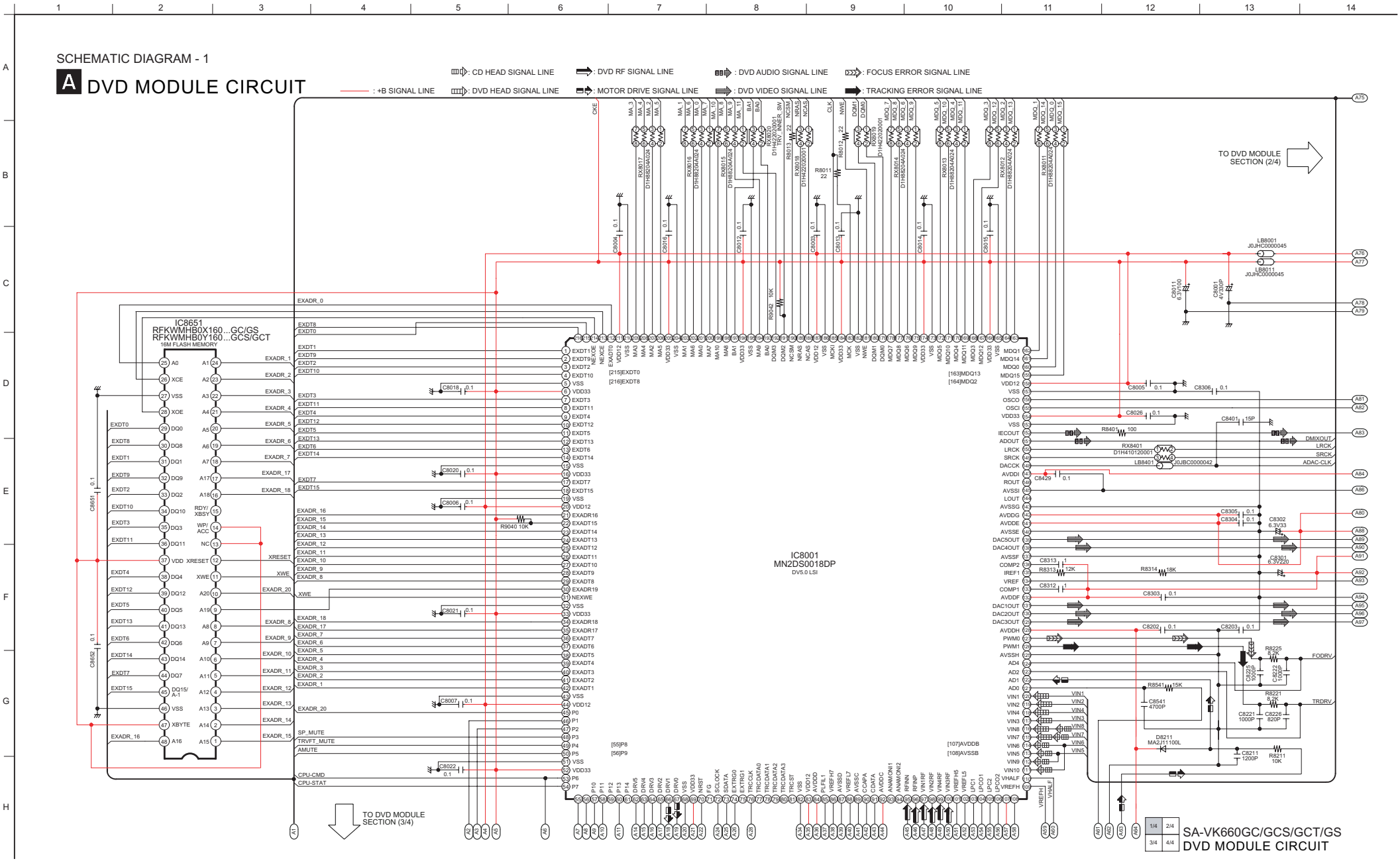

SCHEMATIC DIAGRAM - 2

A DVD MODULE CIRCUIT

: +B SIGNAL LINE : DVD AUDIO SIGNAL LINE : DVD VIDEO SIGNAL LINE : MAIN SIGNAL LINE

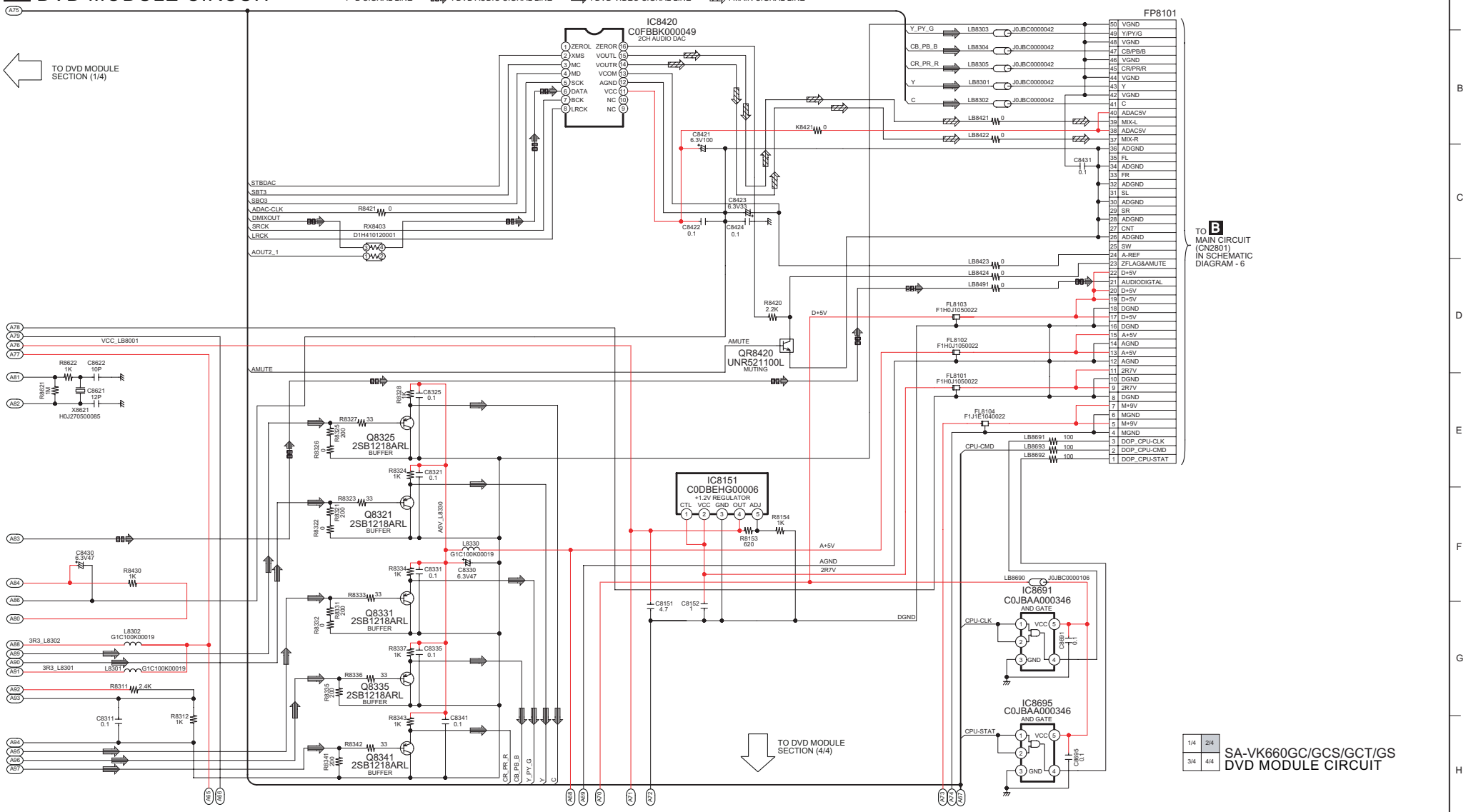

1/4	2/4
3/4	4/4

SA-VK660GC/GCS/GCT/GS
DVD MODULE CIRCUIT

SCHEMATIC DIAGRAM - 3

A DVD MODULE CIRCUIT

: +B SIGNAL LINE : MOTOR DRIVE SIGNAL LINE : DVD RF SIGNAL LINE

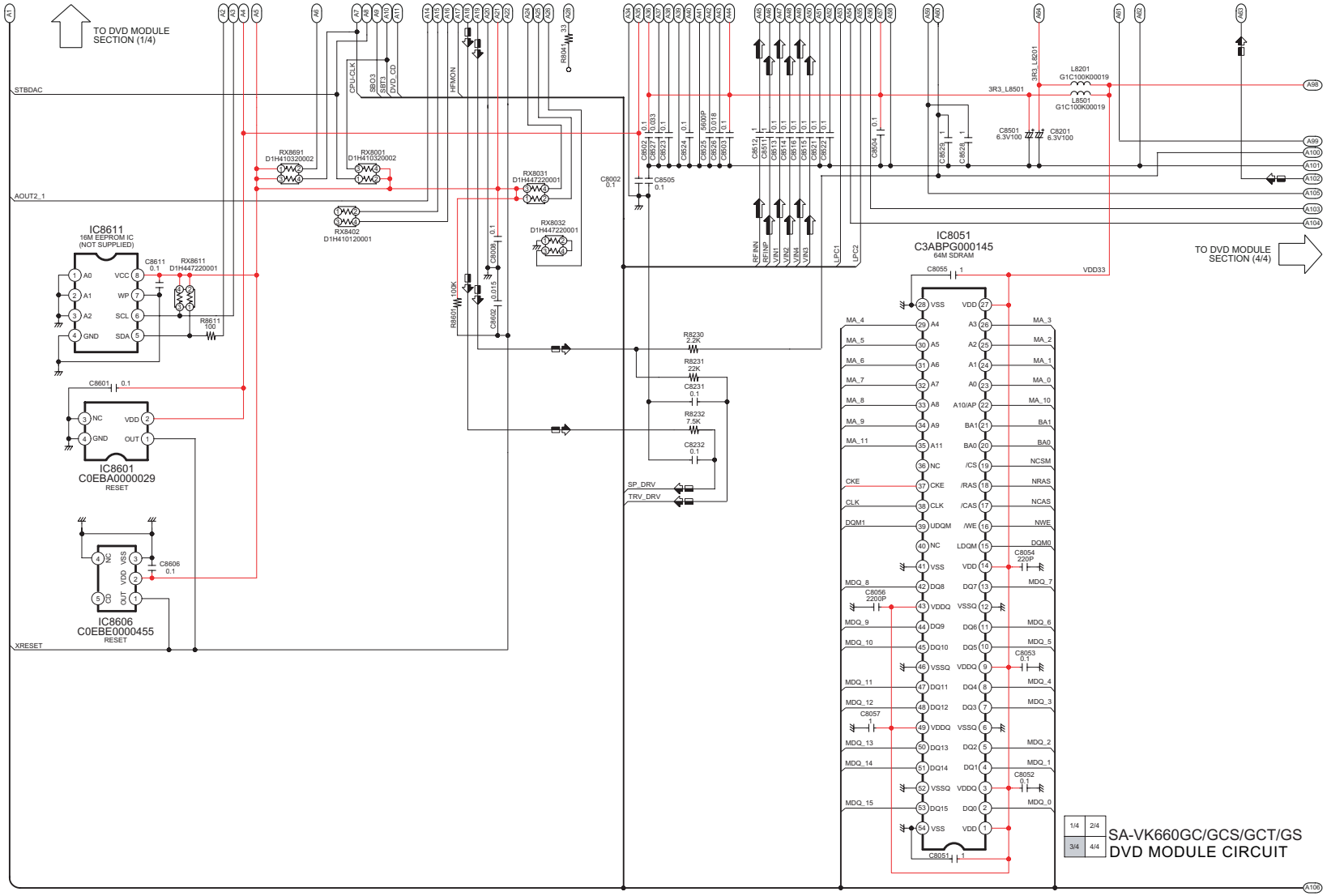

1/4	2/4
3/4	4/4

SA-VK660GC/GCS/GCT/GS
DVD MODULE CIRCUIT

SCHEMATIC DIAGRAM - 4

A DVD MODULE CIRCUIT

: +B SIGNAL LINE
: CD HEAD SIGNAL LINE
: DVD HEAD SIGNAL LINE
: MOTOR DRIVE SIGNAL LINE
: TRACKING ERROR SIGNAL LINE
: DVD RF SIGNAL LINE
: FOCUS ERROR SIGNAL LINE

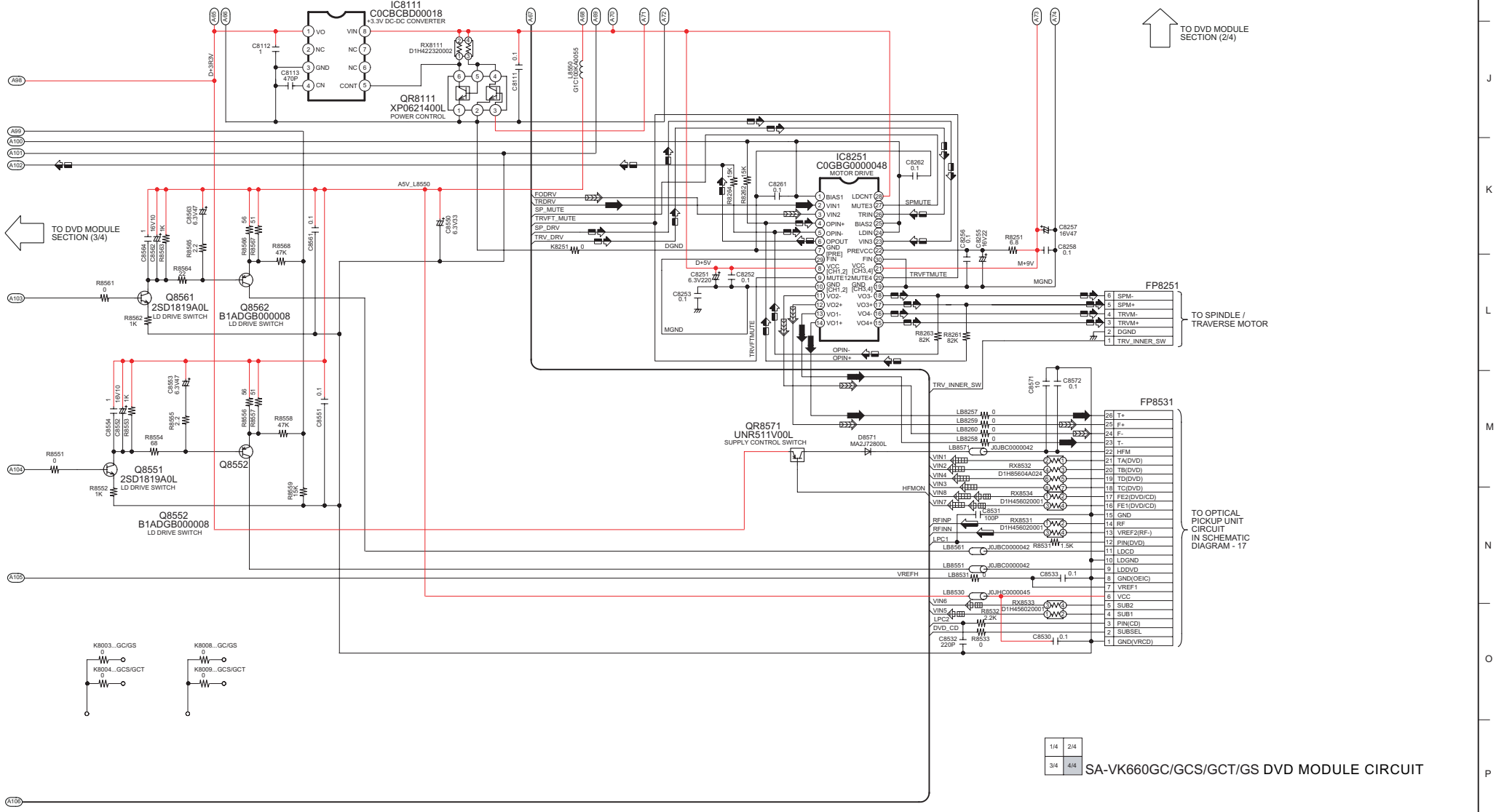

1/4	2/4
3/4	4/4

SA-VK660GC/GCS/GCT/GS DVD MODULE CIRCUIT

18.2. (B) Main Circuit

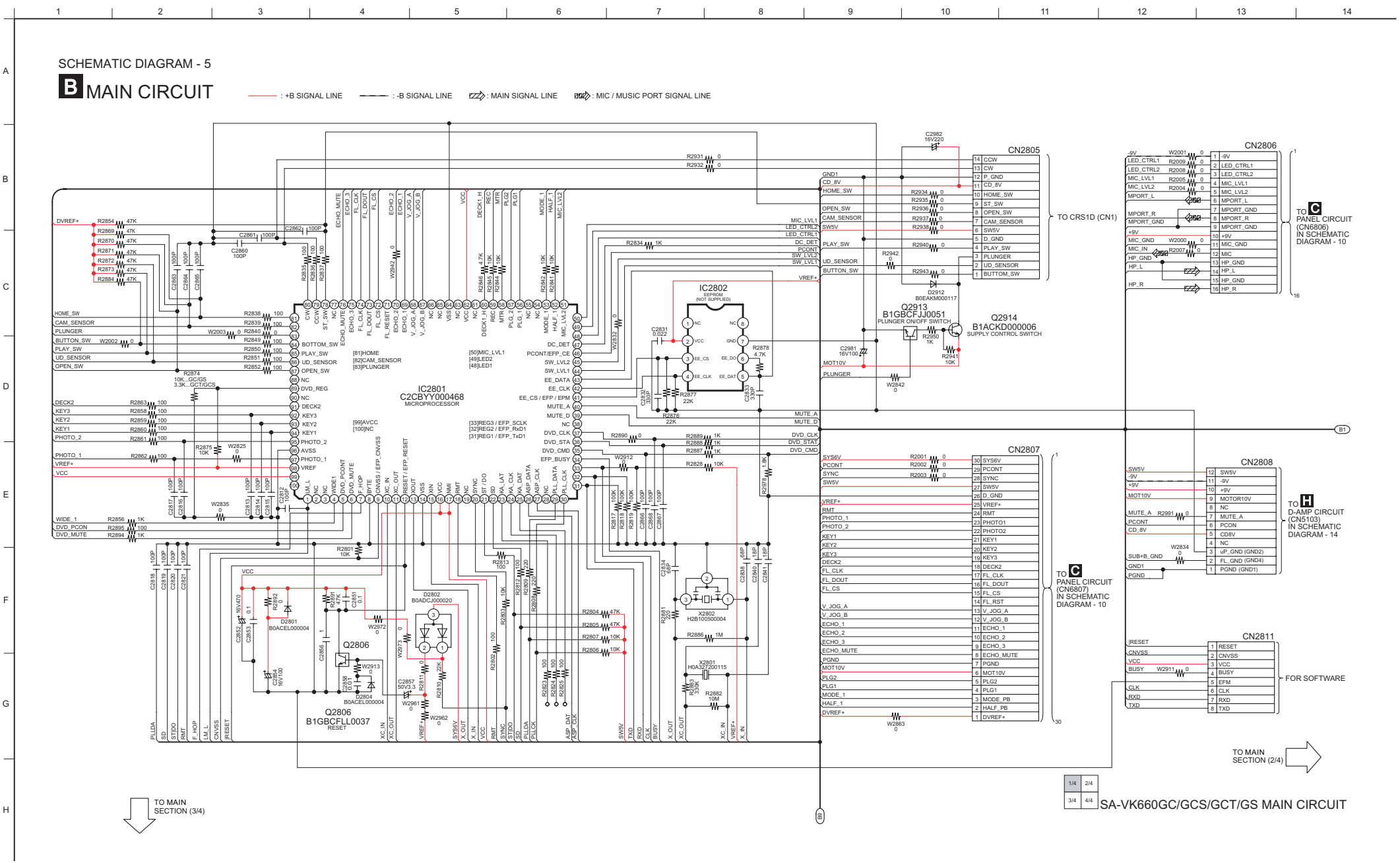

SCHEMATIC DIAGRAM - 6

B MAIN CIRCUIT

: -B SIGNAL LINE
: +B SIGNAL LINE
: TAPE RECORD SIGNAL LINE
: TAPE PLAYBACK SIGNAL LINE
: AUX SIGNAL LINE
: DVD VIDEO SIGNAL LINE
: MAIN SIGNAL LINE
: AM / FM SIGNAL LINE
: DVD AUDIO SIGNAL LINE

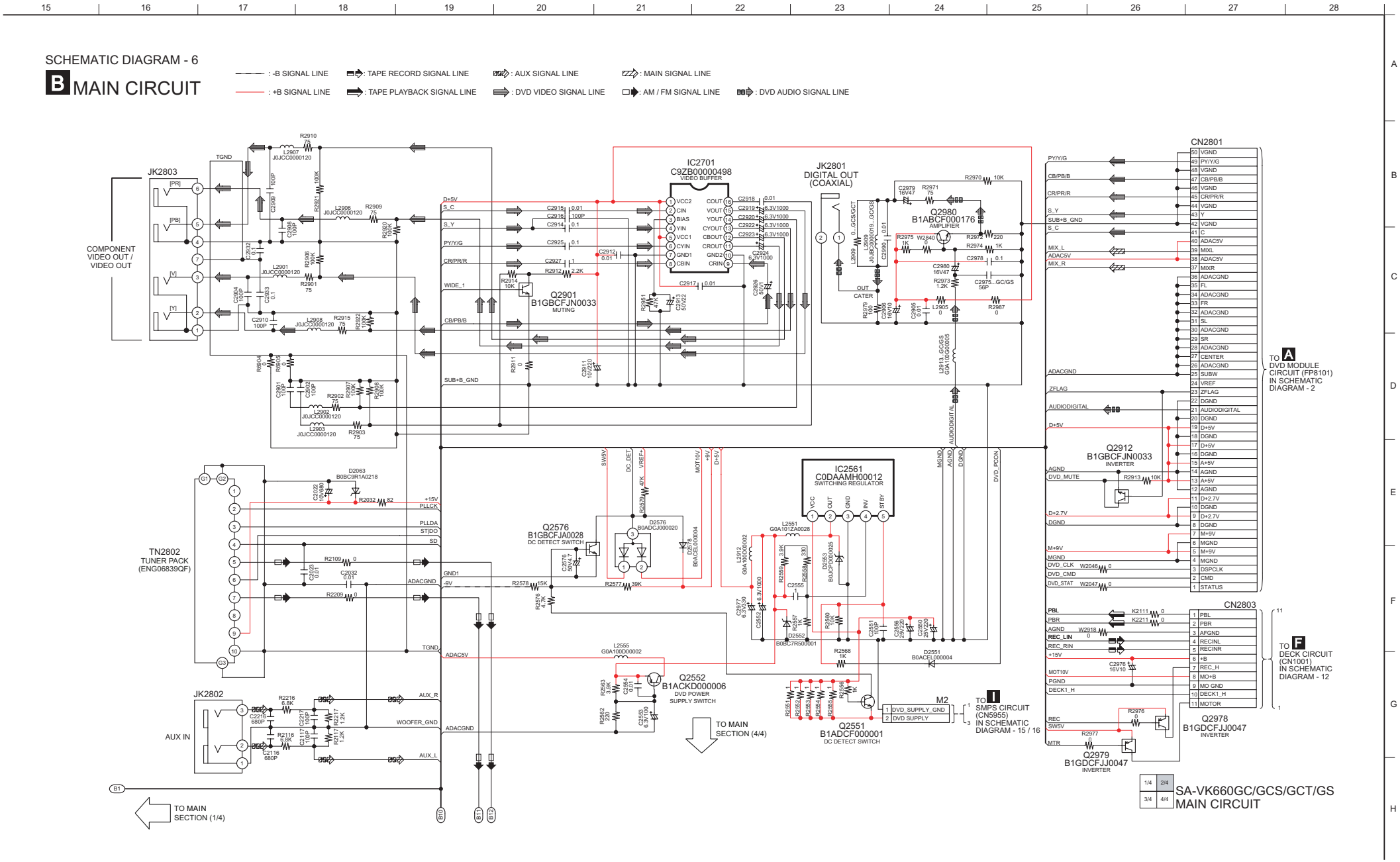

SCHEMATIC DIAGRAM - 7

B MAIN CIRCUIT

: -B SIGNAL LINE
: +B SIGNAL LINE
: MAIN SIGNAL LINE
: AM / FM SIGNAL LINE
: TAPE RECORD SIGNAL LINE
: TAPE PLAYBACK SIGNAL LINE
: AUDIO SOURCE SIGNAL LINE
: AUX / MIC / MUSIC PORT SIGNAL LINE

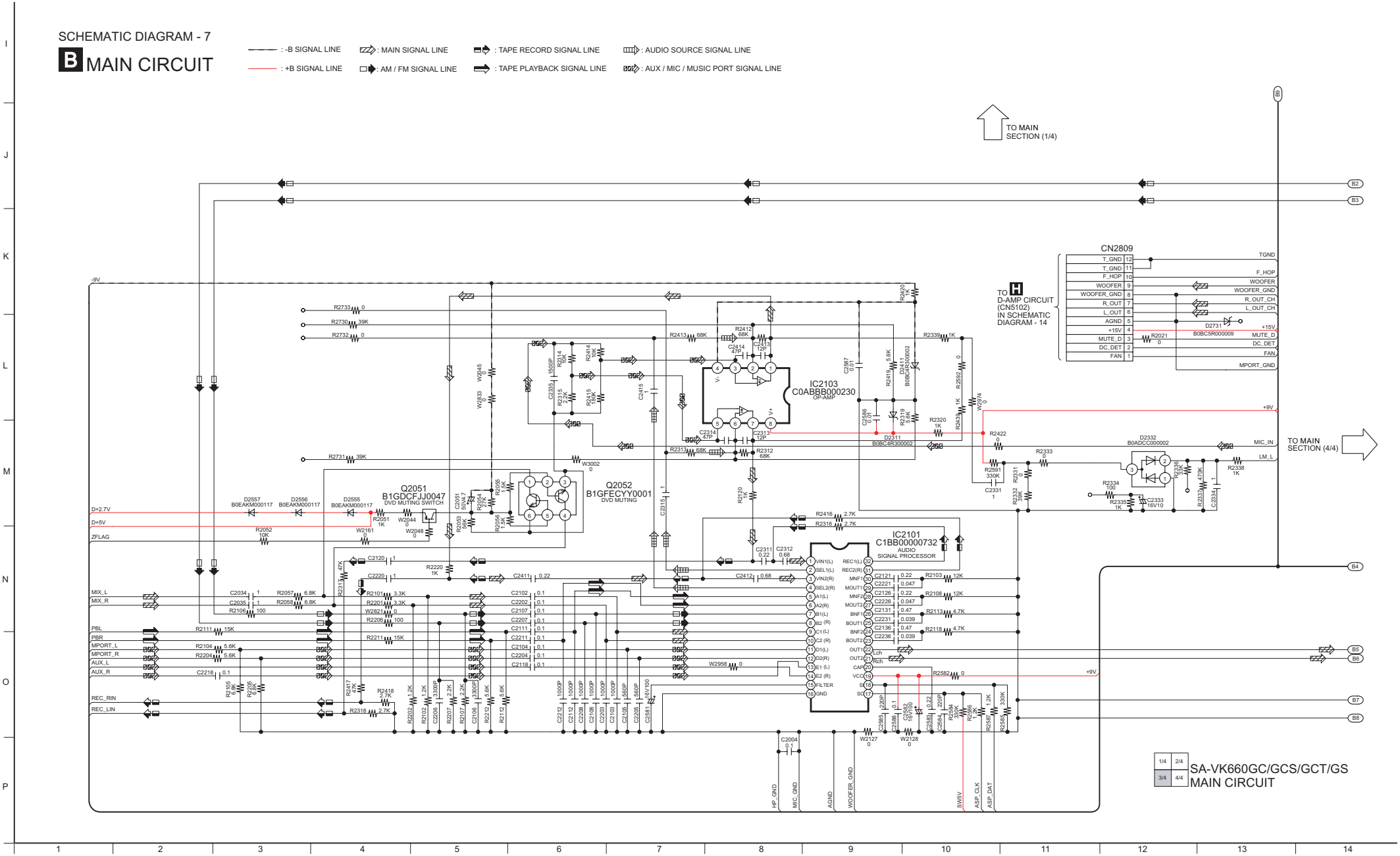

SCHEMATIC DIAGRAM - 8

B MAIN CIRCUIT

: -B SIGNAL LINE
: +B SIGNAL LINE
: MAIN SIGNAL LINE
: AM / FM SIGNAL LINE

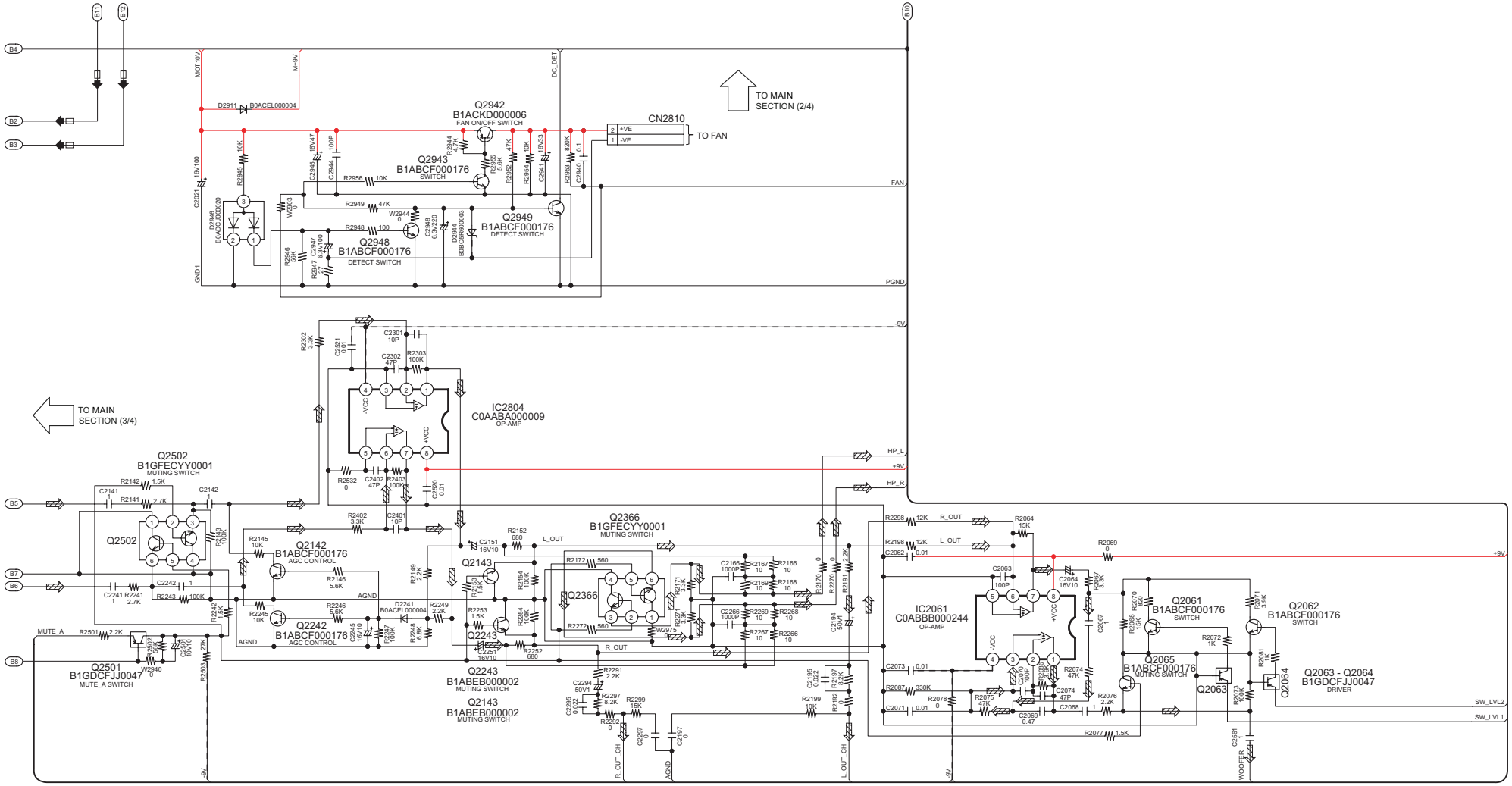

1/4	2/4
3/4	4/4

SA-VK660GC/GCS/GCT/GS
MAIN CIRCUIT

18.3. (C) Panel Circuit

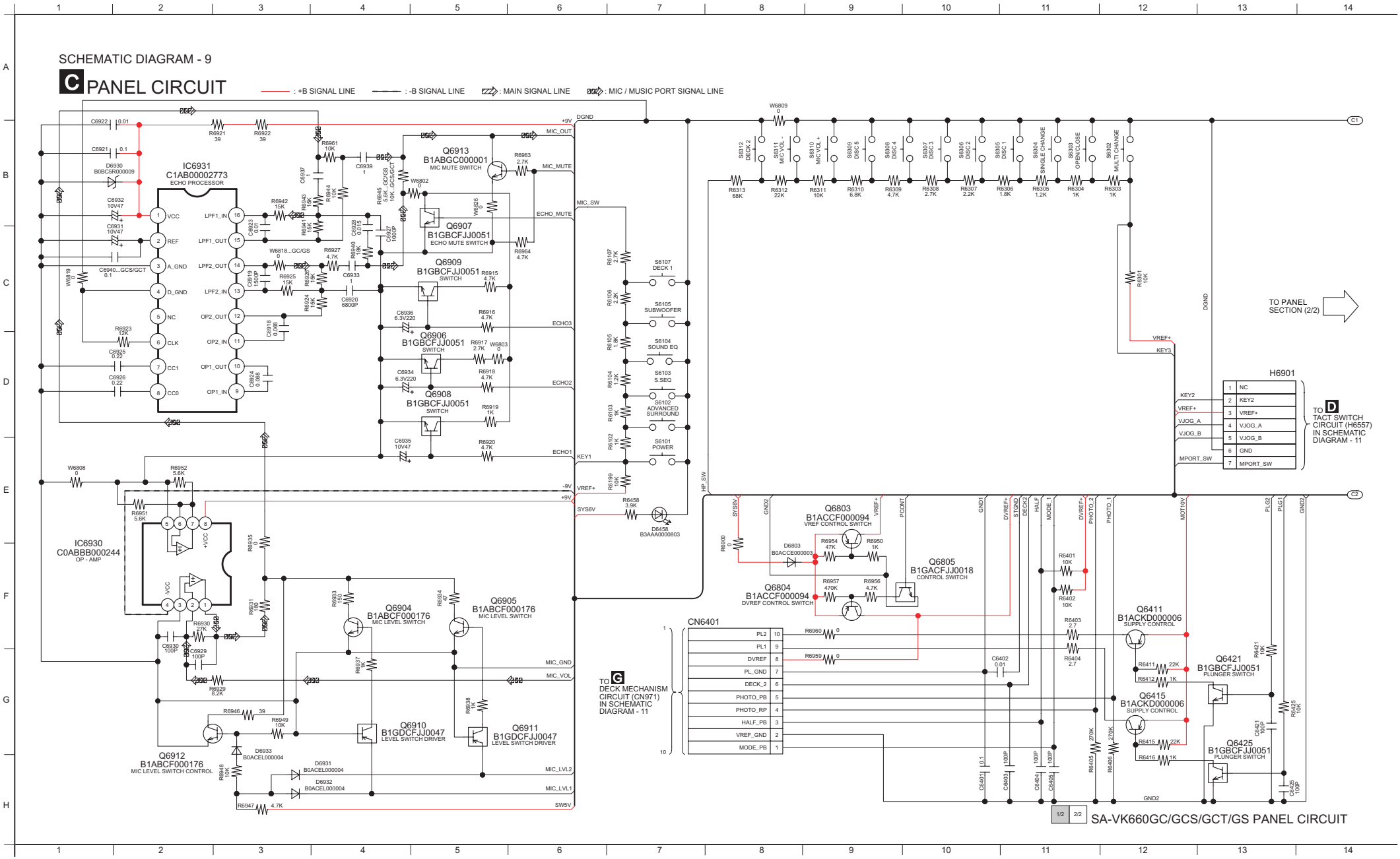

SCHEMATIC DIAGRAM - 10

C PANEL CIRCUIT

: +B SIGNAL LINE : -B SIGNAL LINE : MAIN SIGNAL LINE : MIC / MUSIC PORT SIGNAL LINE

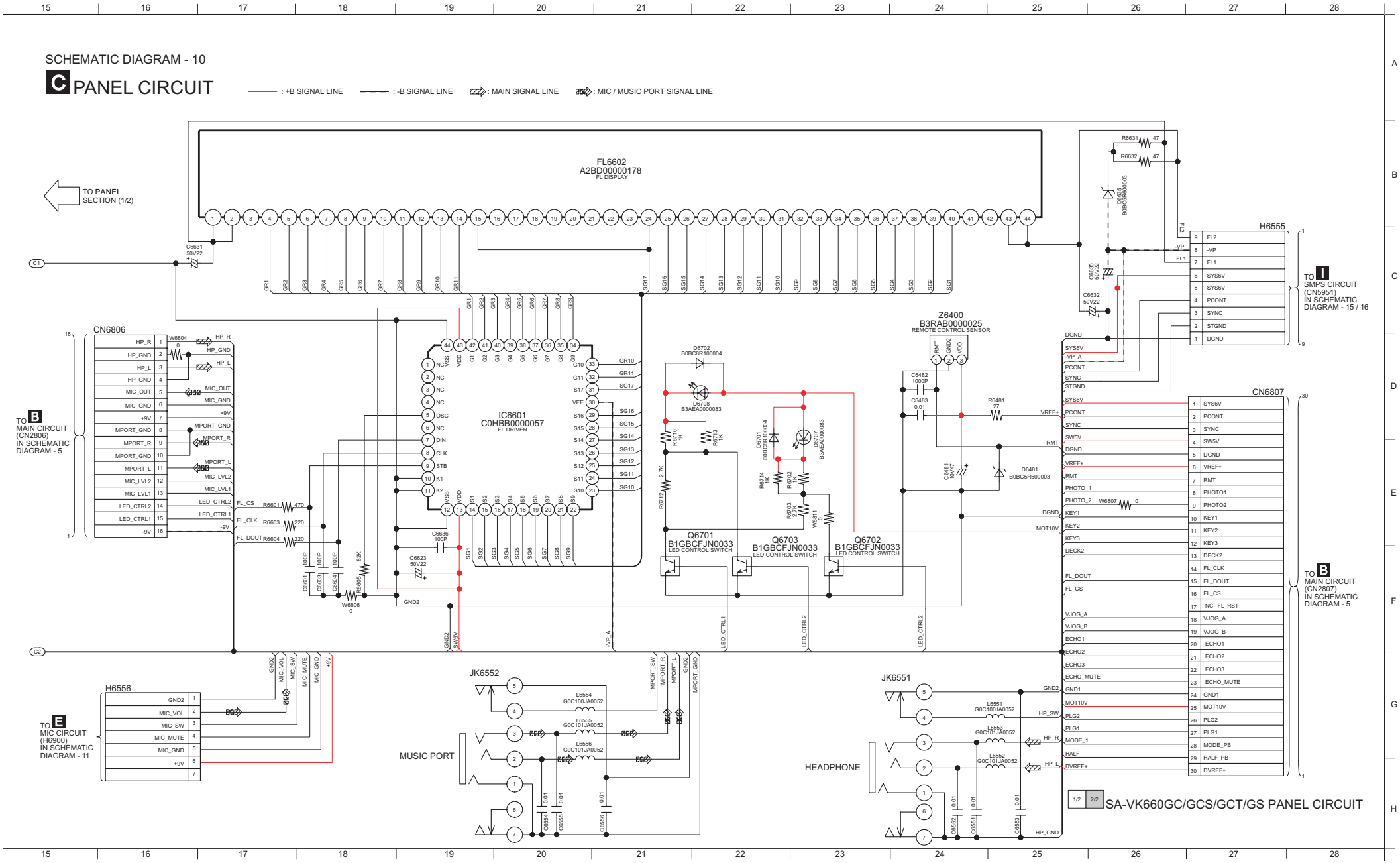

18.4. (D) Tact Switch Circuit, (E) Mic Circuit & (G) Deck Mechanism Circuit

SCHEMATIC DIAGRAM - 11

D TACT SWITCH CIRCUIT

: +B SIGNAL LINE

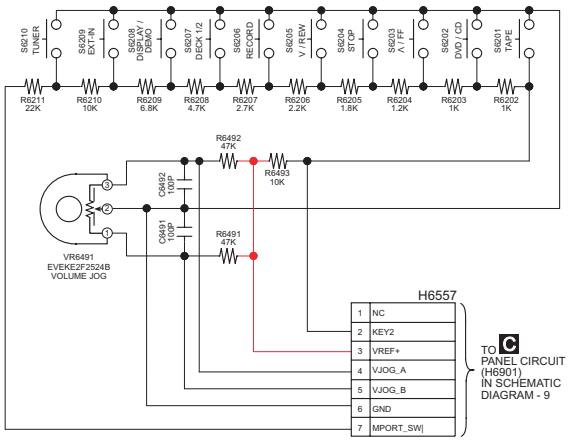

E MIC CIRCUIT

: +B SIGNAL LINE : MIC SIGNAL LINE

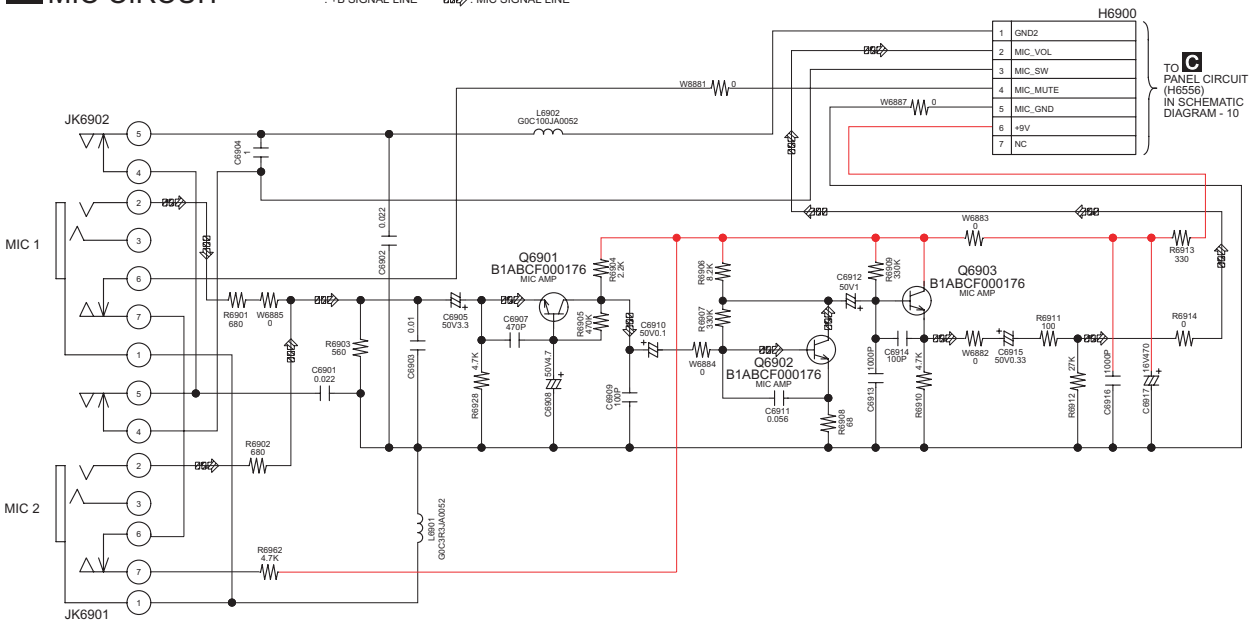

G DECK MECHANISM CIRCUIT

: +B SIGNAL LINE

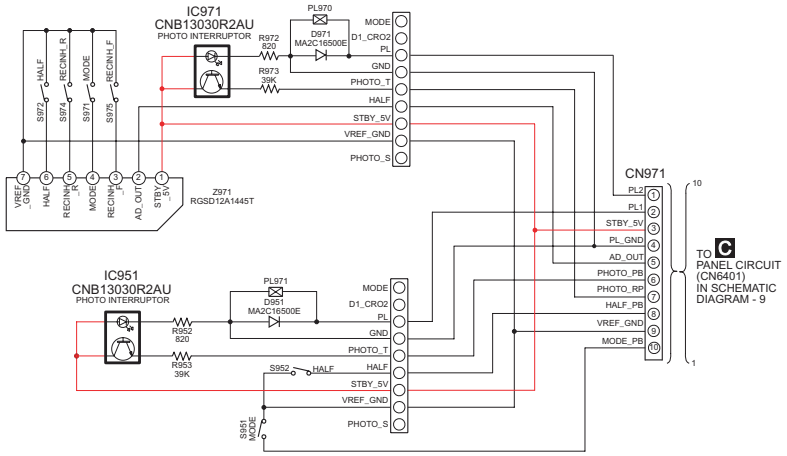

SA-VK660GC/GCS/GCT/GS TACT SWITCH / MIC / DECK MECHANISM CIRCUIT

18.5. (F) Deck Circuit

SCHEMATIC DIAGRAM - 12

F DECK CIRCUIT

: +B SIGNAL LINE : TAPE RECORD SIGNAL LINE : TAPE PLAYBACK SIGNAL LINE

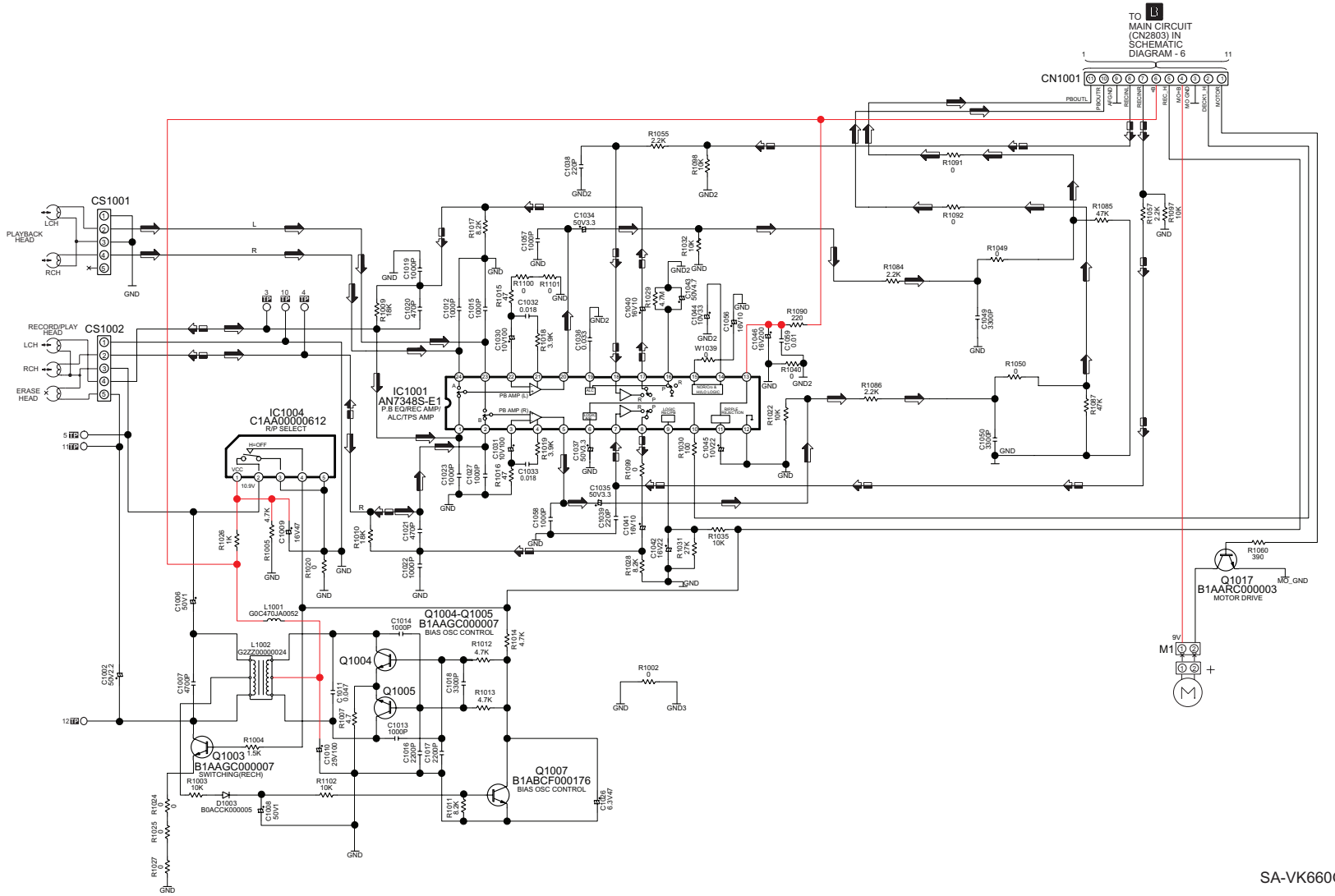

SA-VK660GC/GCS/GCT/GS DECK CIRCUIT

18.6. (H) D-Amp Circuit

SCHEMATIC DIAGRAM - 13

H D-AMP CIRCUIT

—— :+B SIGNAL LINE —·— :+B SIGNAL LINE ▨ : MAIN SIGNAL LINE

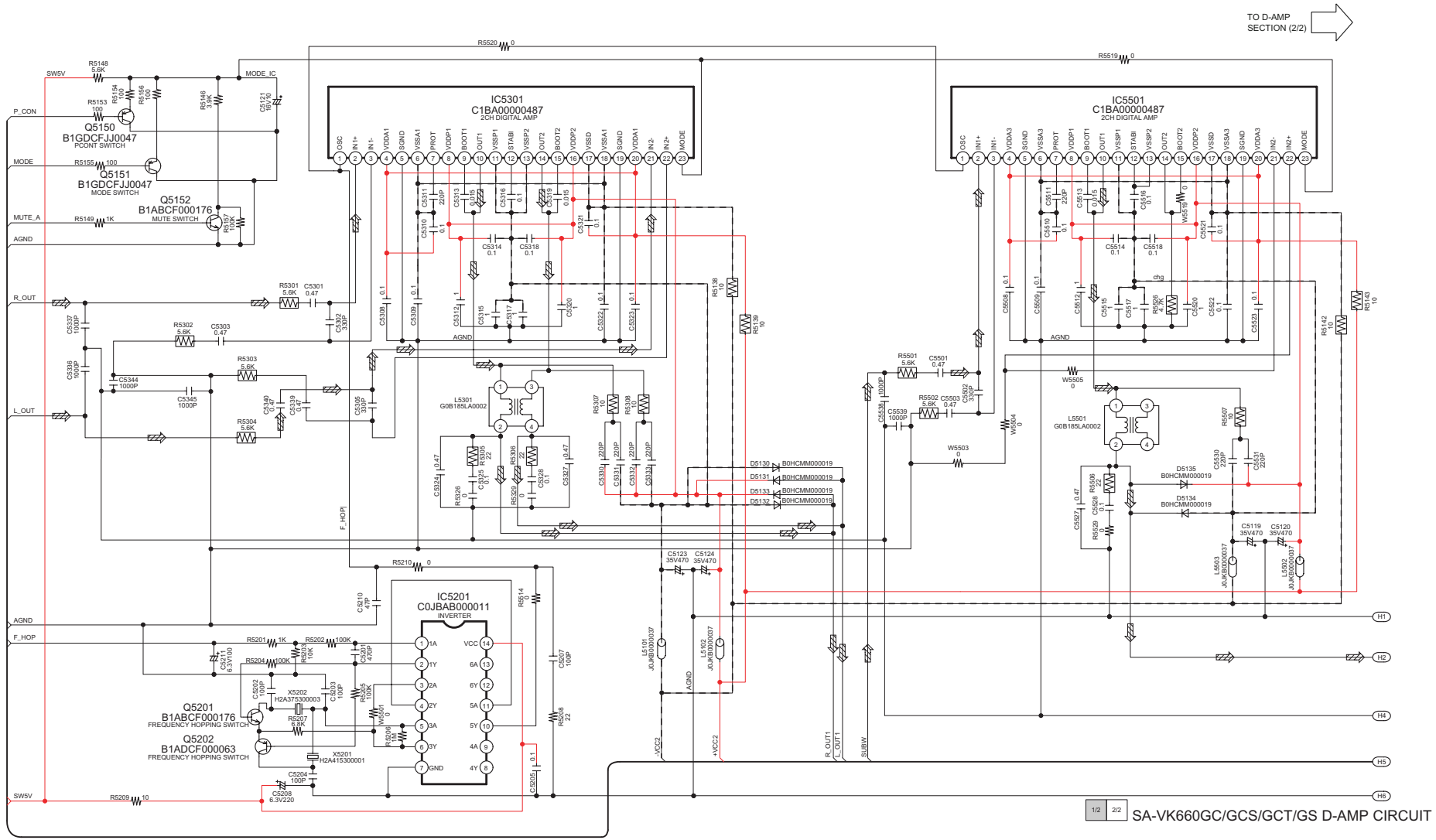

SCHEMATIC DIAGRAM - 14

H D-AMP CIRCUIT

—— :+B SIGNAL LINE —·— :+B SIGNAL LINE ▨ : MAIN SIGNAL LINE

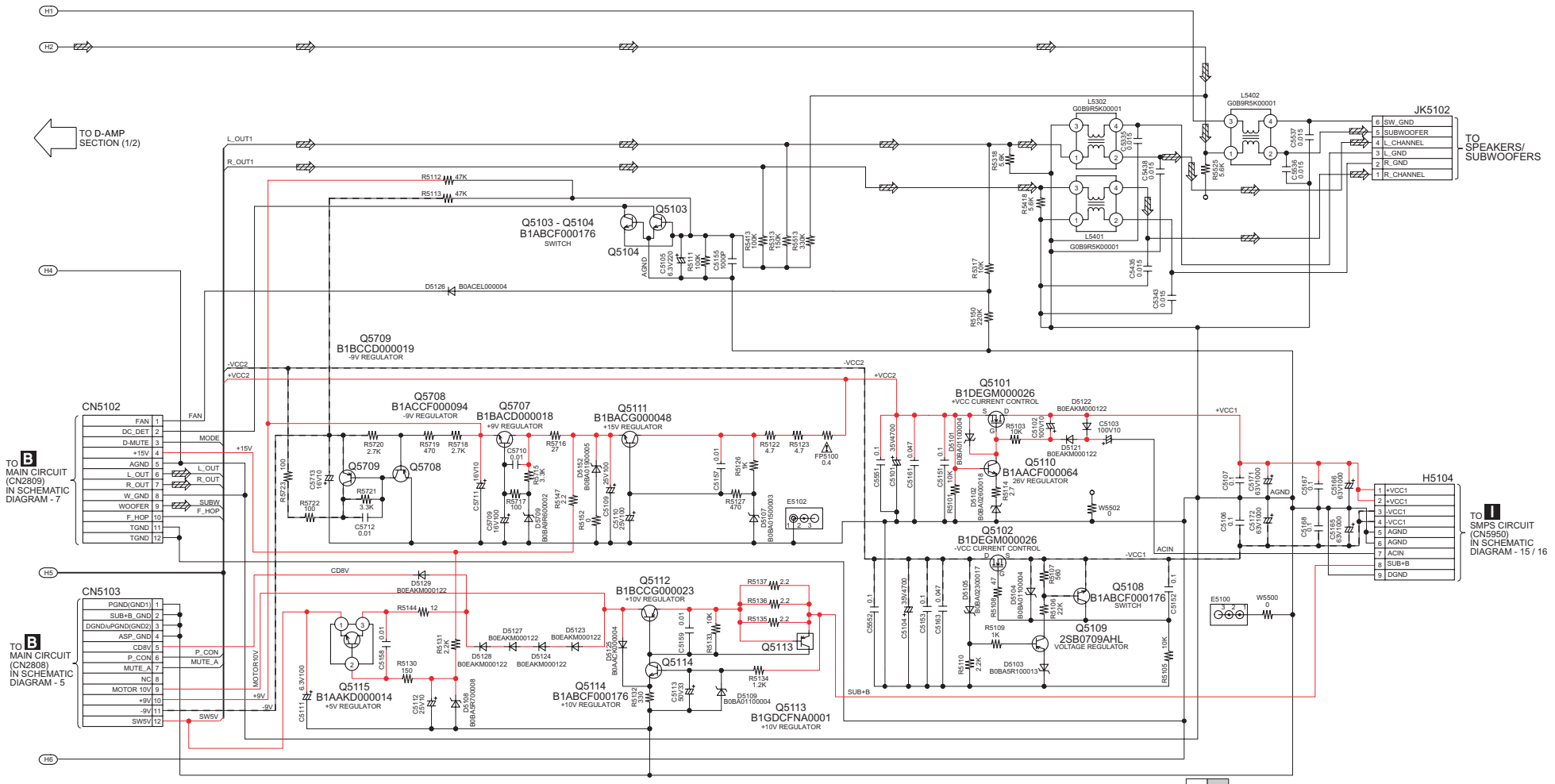

18.7. (I) SMPS Circuit

SCHEMATIC DIAGRAM - 15

I SMPS CIRCUIT (FOR GC ONLY)

:+B SIGNAL LINE :+B SIGNAL LINE

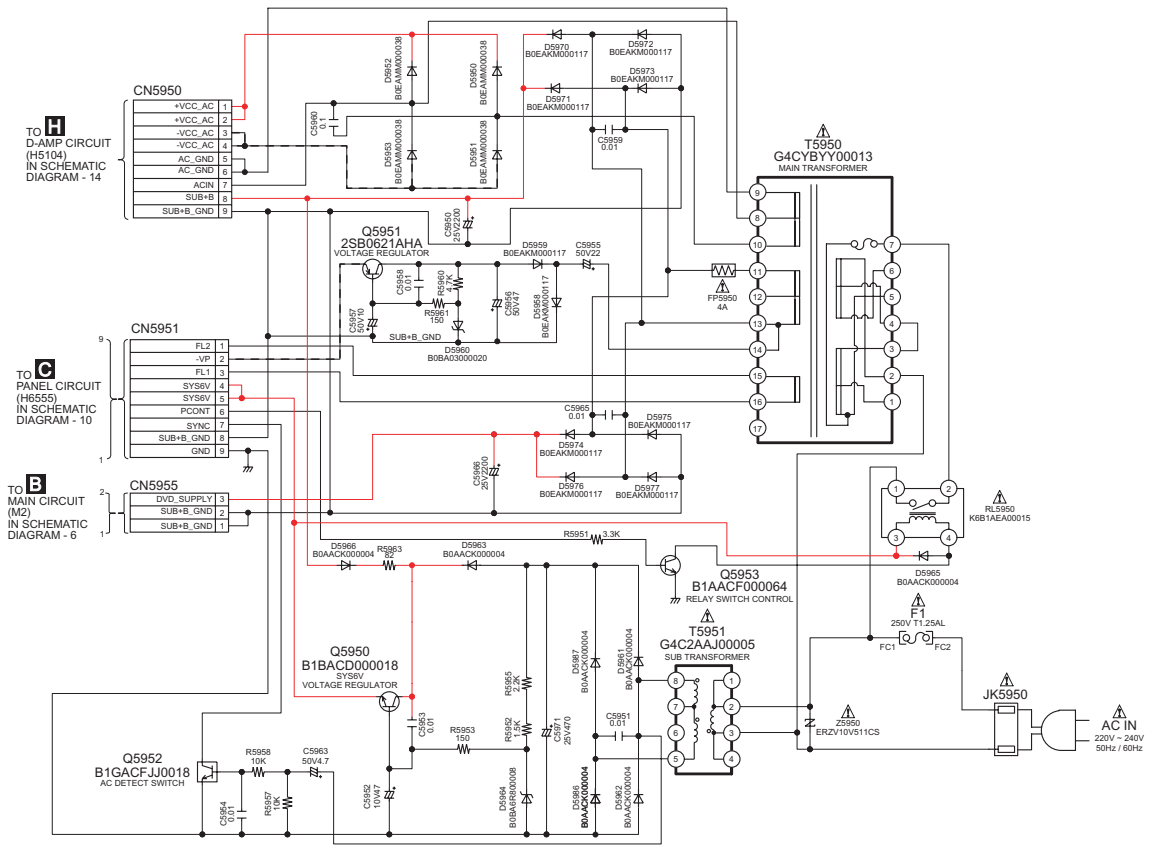

SA-VK660GC SMPS CIRCUIT

SCHEMATIC DIAGRAM - 16

I SMPS CIRCUIT (FOR GCS/GCT/GS ONLY)

:+B SIGNAL LINE :+B SIGNAL LINE

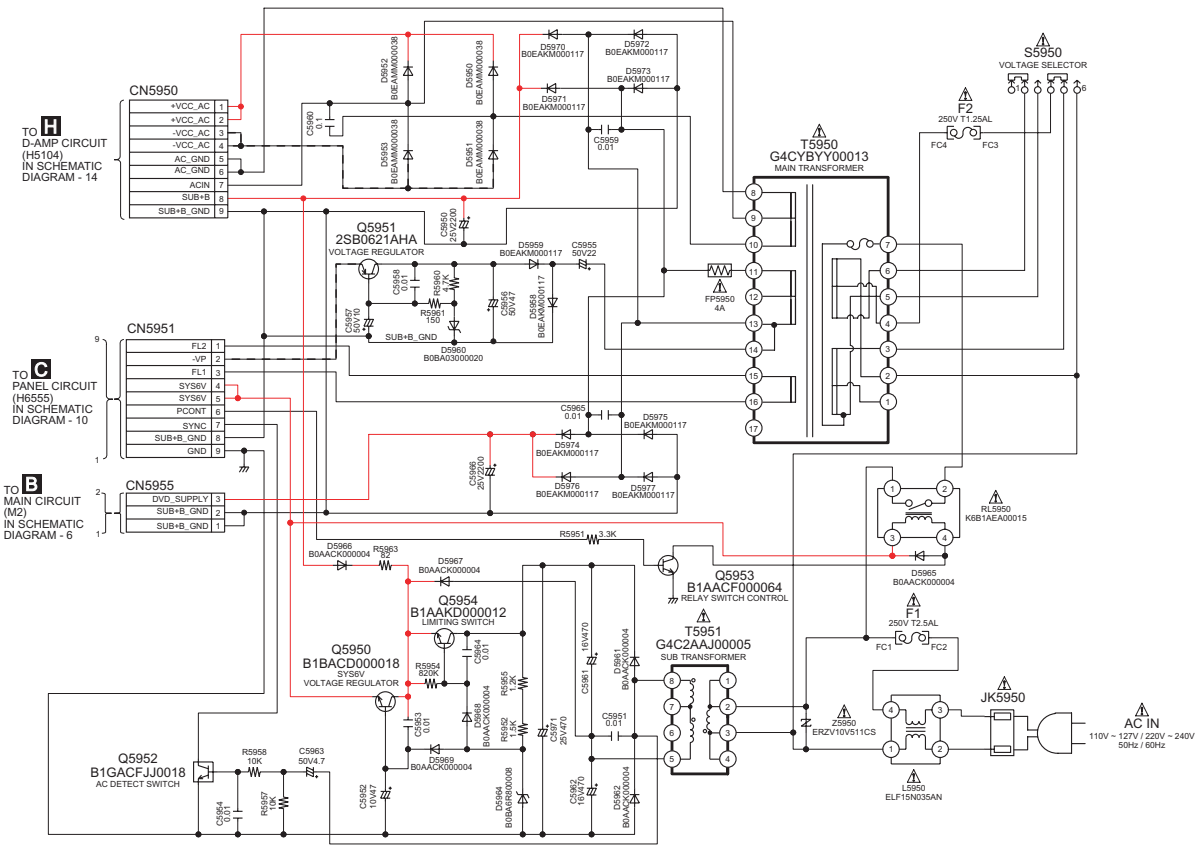

SA-VK660GCS/GCT/GS SMPS CIRCUIT

18.8. Optical Pickup Unit Circuit

SCHEMATIC DIAGRAM - 17

OPTICAL PICKUP UNIT CIRCUIT

(FOR REFERENCE ONLY)

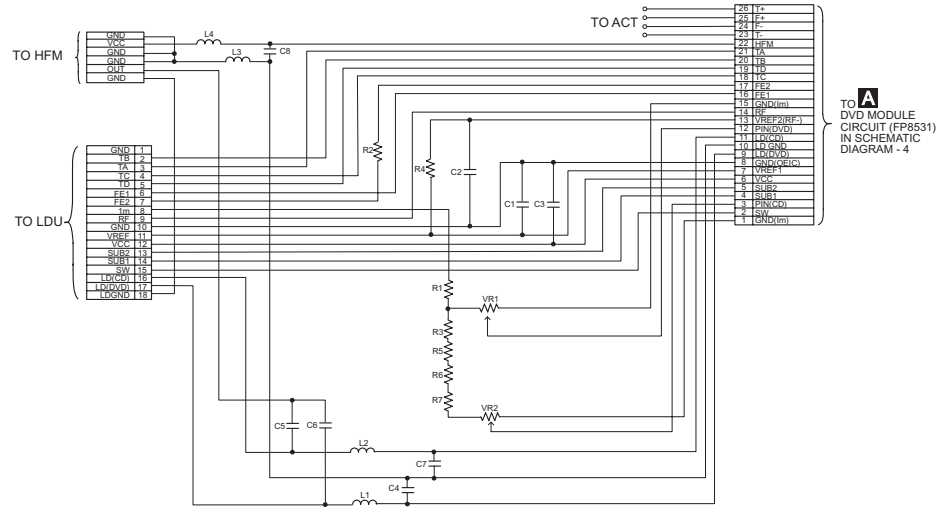

SA-VK660GC/GCS/GCT/GS OPTICAL PICKUP UNIT CIRCUIT

19 Printed Circuit Board

Note: Circuit board diagrams may be modified at any time with the development of new technology.

19.1. (A) DVD Module P.C.B. (Side A & B)

A DVD MODULE P.C.B. (REPX0561E...GC/GS, REPX0561F...GCS/GCT)

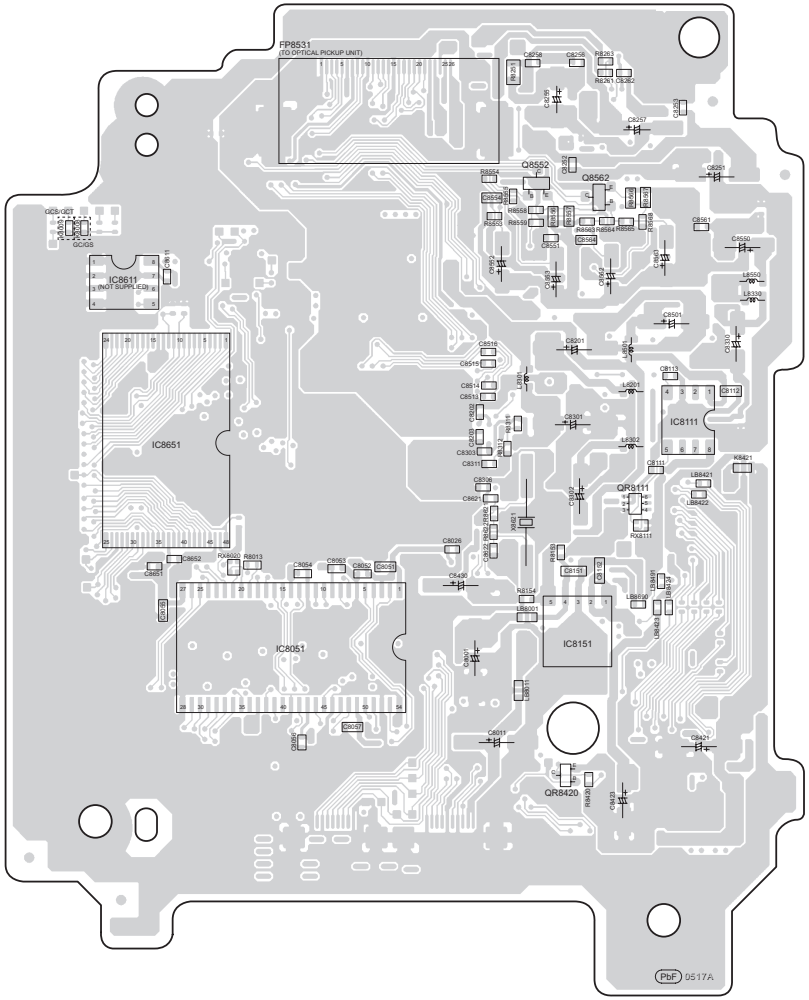

(SIDE A)

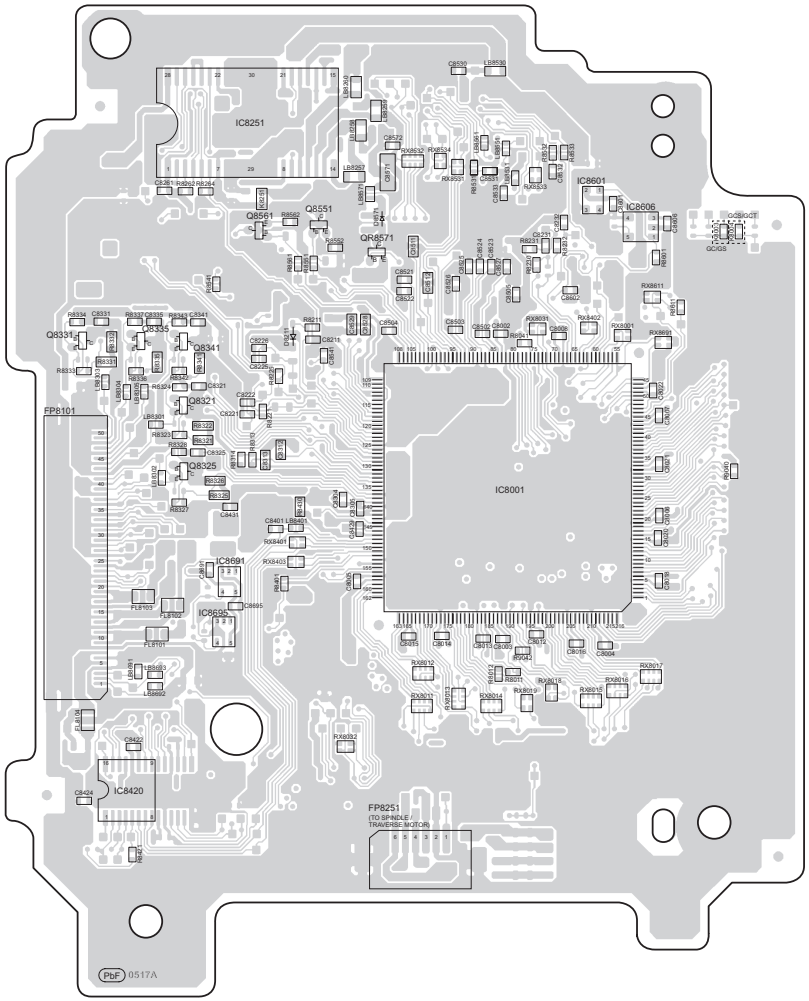

(SIDE B)

SA-VK660GC/GS/GCS/GCT
DVD MODULE P.C.B.

19.2. (B) Main P.C.B.

B MAIN P.C.B. (REPV0137D...GC/GS)
(REPV0137E...GCS/GCT)

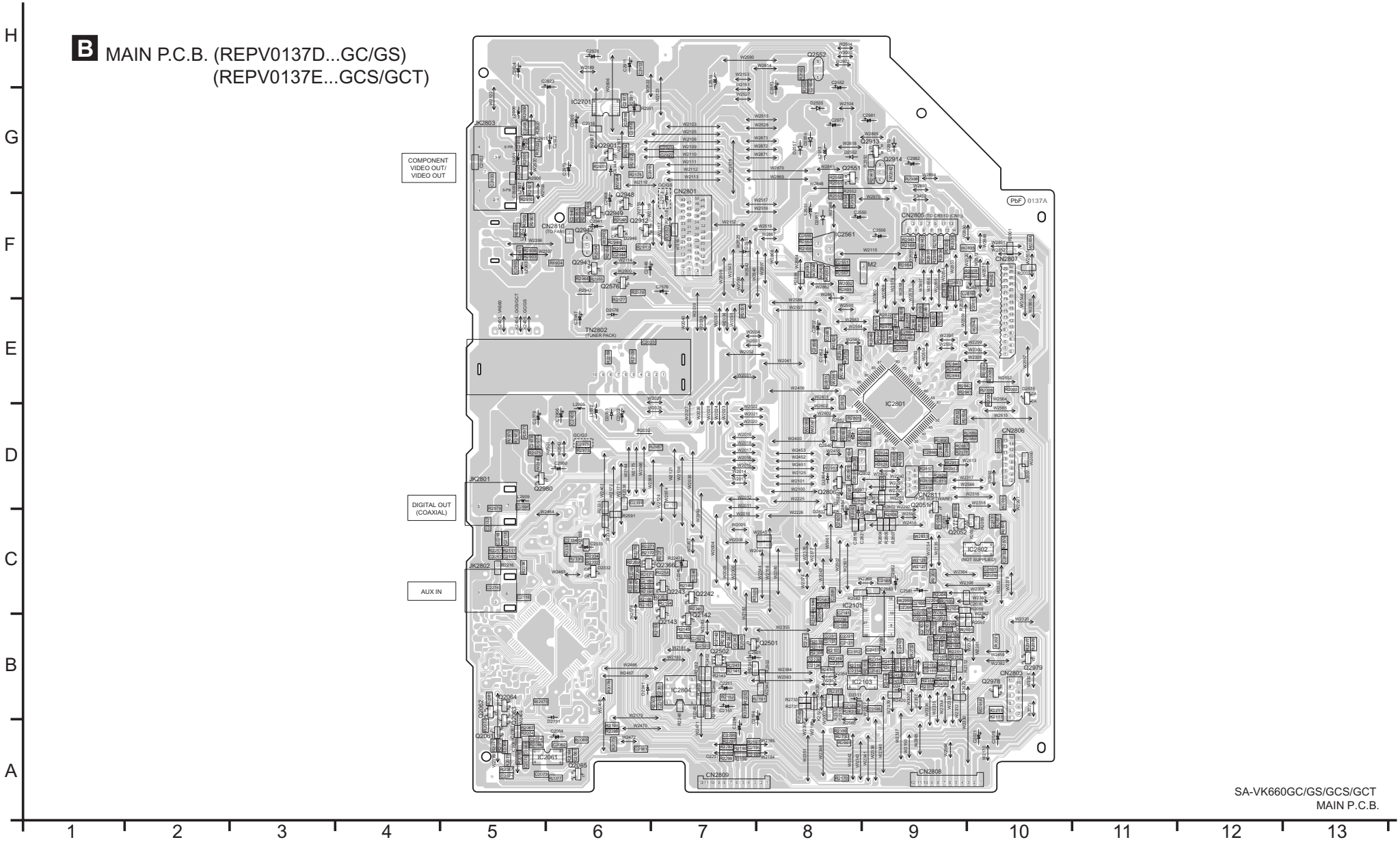

SA-VK660GC/GS/GCS/GCT
MAIN P.C.B.

19.3. (C) Panel P.C.B.

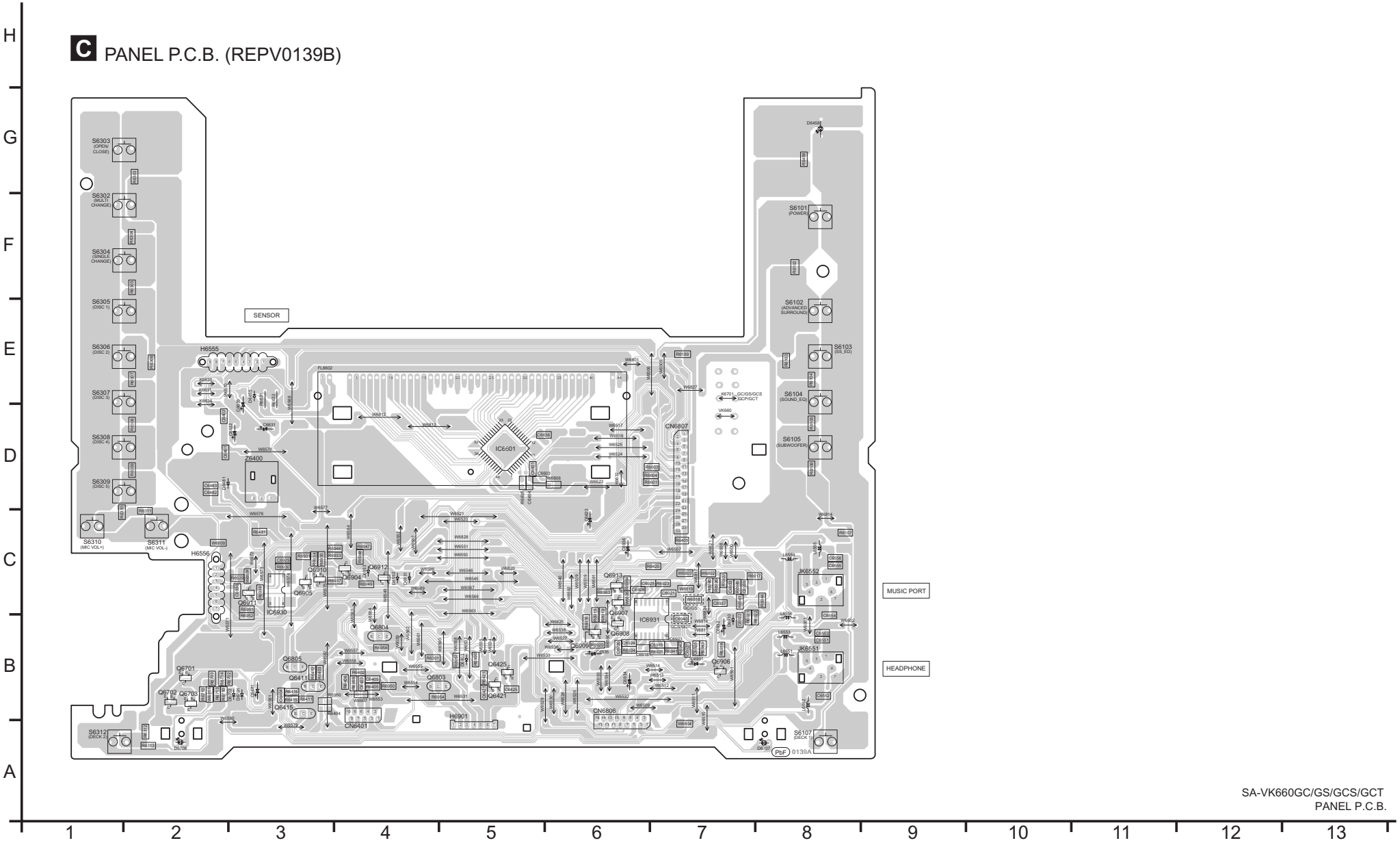

SA-VK660GC/GS/GCS/GCT
PANEL P.C.B.

19.4. (D) Tact Switch P.C.B., (E) Mic P.C.B., (F) Deck P.C.B. & (G) Deck Mechanism P.C.B.

D TACT SWITCH P.C.B. (REPV0139B)

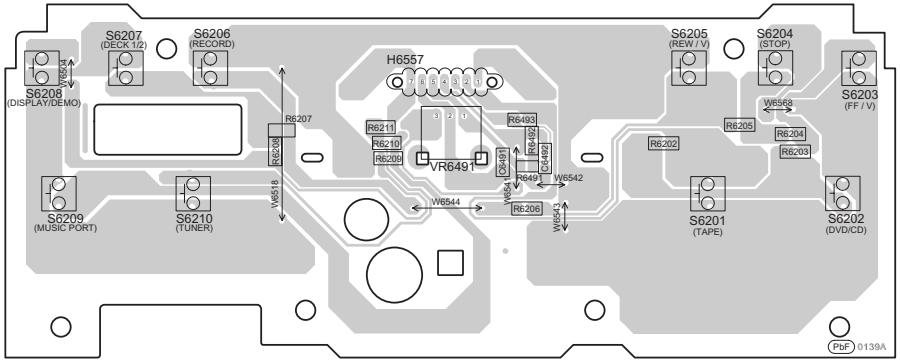

VOLUME

E MIC P.C.B. (REPV0139B)

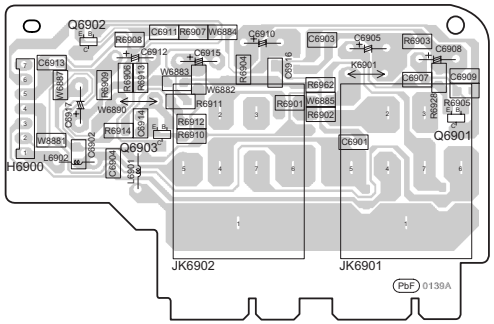

MIC 1 MIC 2

F DECK P.C.B. (REPV0139B)

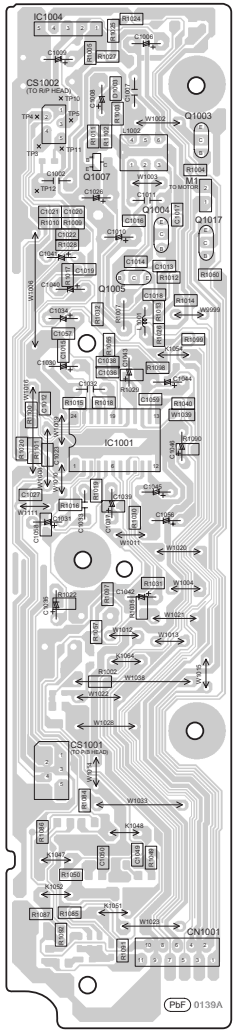

G DECK MECHANISM P.C.B. (REPX0321B)

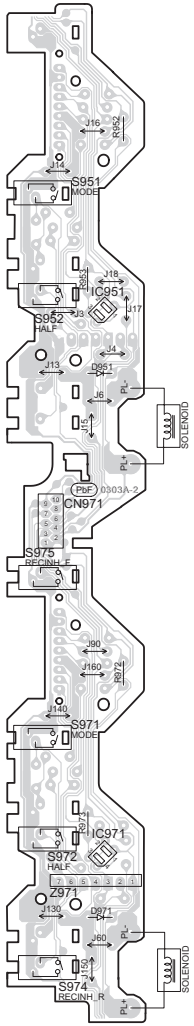

SA-VK660GC/GS/GCS/GCT
TACT SWITCH/MIC/DECK/DECK MECHANISM P.C.B.

19.5. (H) D-Amp P.C.B.

H D-AMP P.C.B. (REPV0138B)

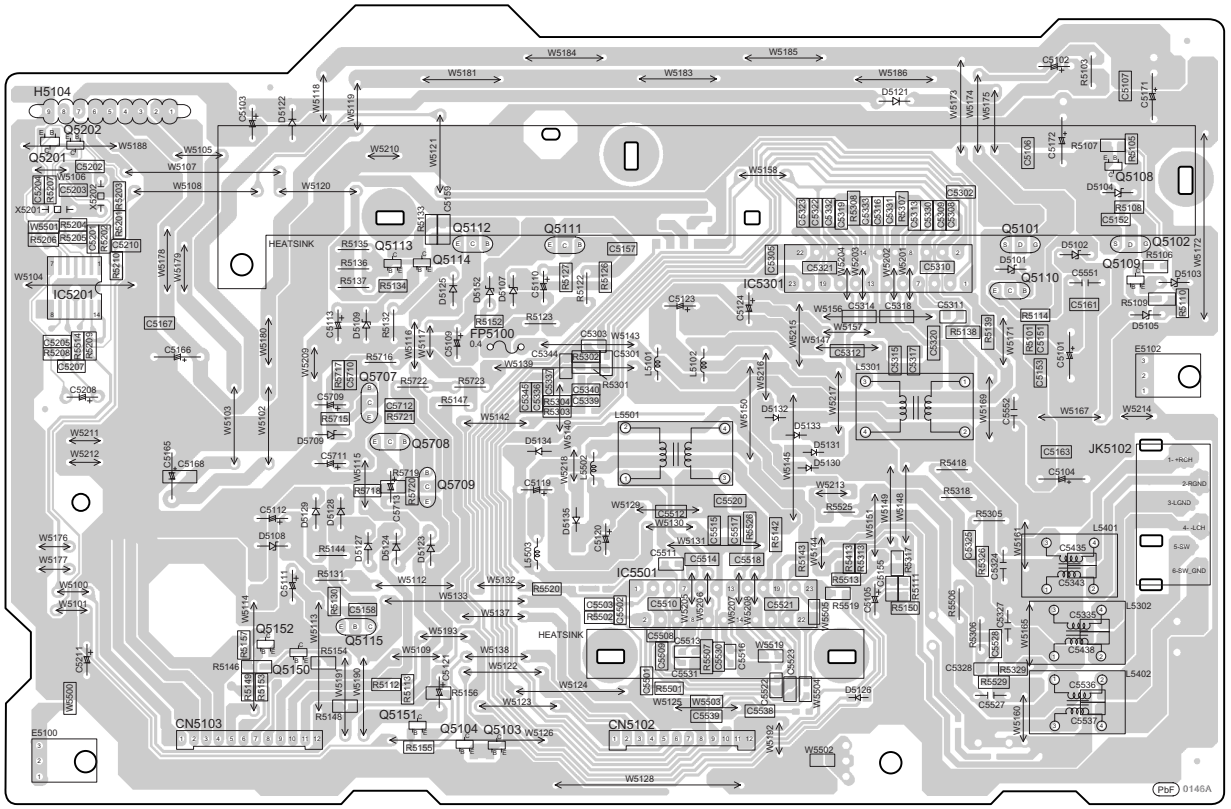

SA-VK660GC/GS/GCS/GCT
DAMP P.C.B.

19.6. (I) SMPS P.C.B. (For GC Only)

I SMPS P.C.B. (REPX0519F...GC)

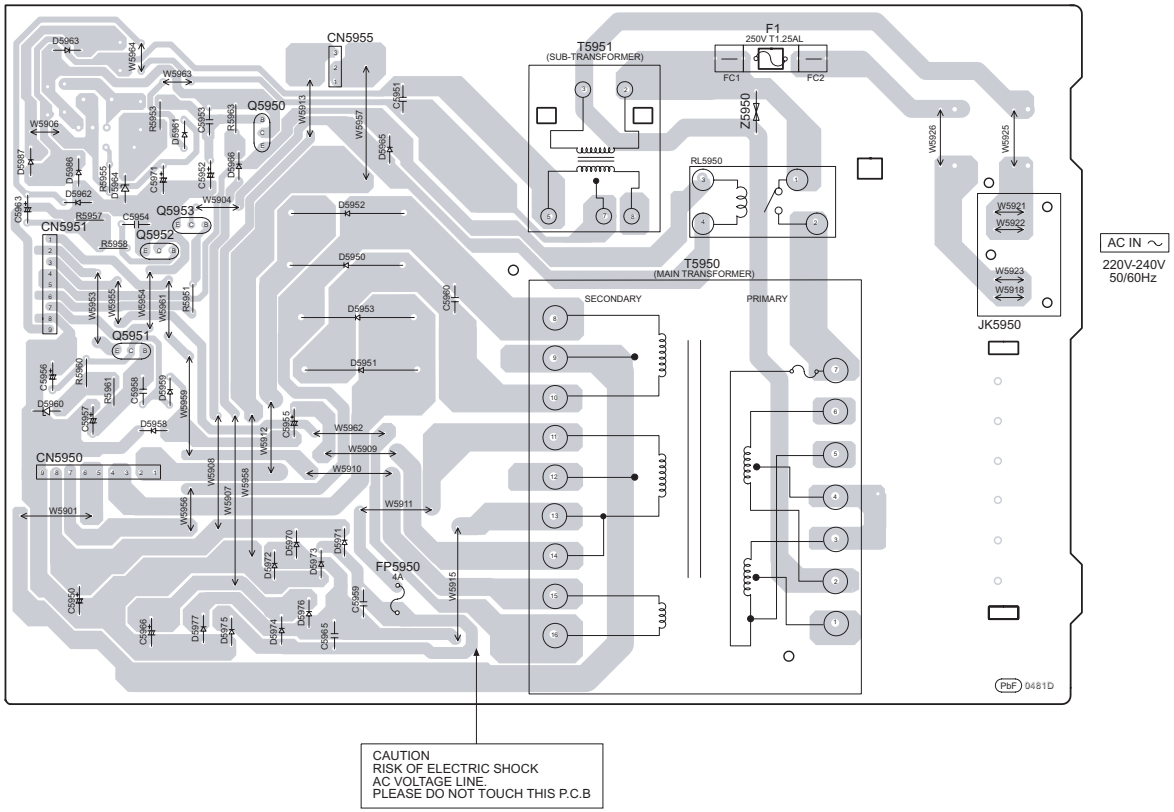

SA-VK660GC
SMPS P.C.B.

19.7. (I) SMPS P.C.B. (For GCS/GS/GCT Only)

I SMPS P.C.B. (REPX0519D...GCS/GS/GCT)

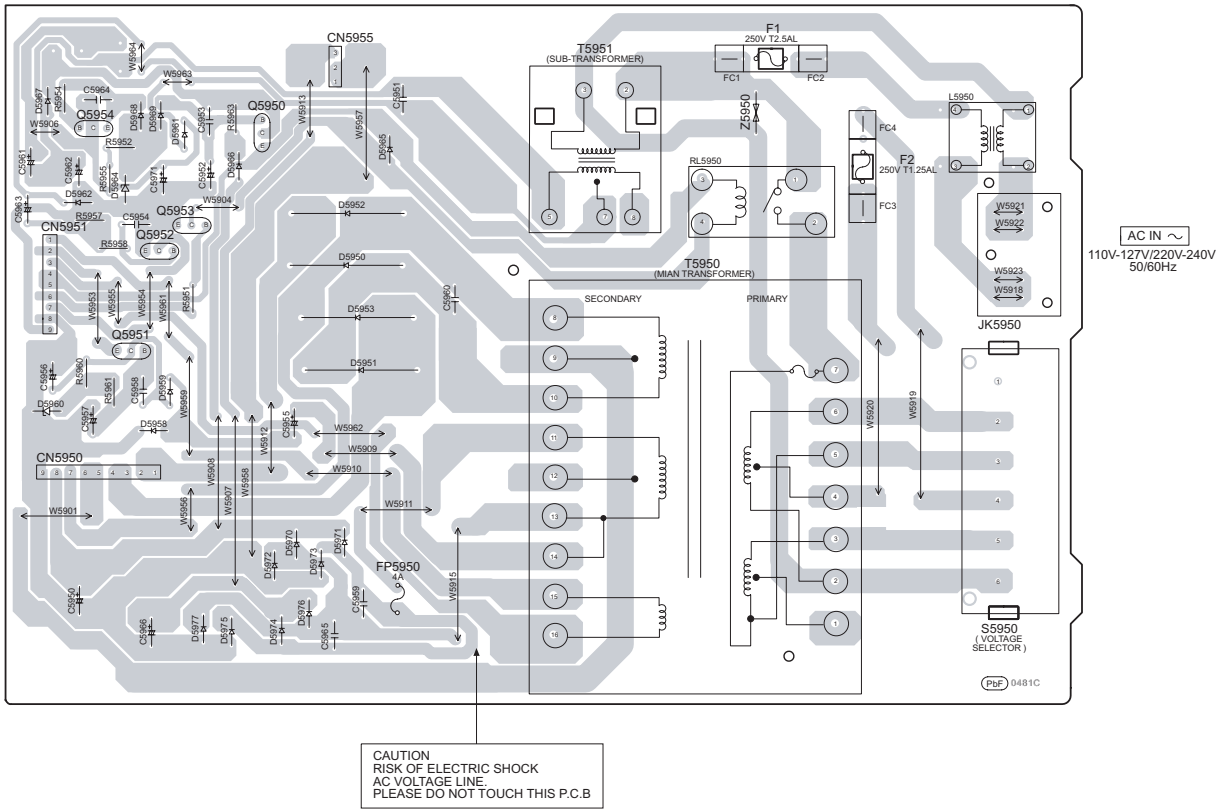

SA-VK660GS/GCS/GCT
SMPS P.C.B.

20 Basic Troubleshooting Guide for Backend Module

20.1. Initialisation and Playability

Problems	Checking Points	Checking Components
1) Distorted picture or abnormal sound is head during the initialization	a) Check SDRAM address, data bus, CLK and other control signals waveform	IC8051
	b) Check video signals	LB8301, R8321, R8322, LB8302, R8325, R8326
	c) Check audio DAC circuitry * Compare the above with OK condition DVD module P.C.B.	IC8421 *Check for solder short and/or component missing/damaged
2) No TOC / Long TOC	a) Check motor driver circuitry (+5V)	IC8251 Pin 8, 21
	b) Check laser drive circuitry (Voltages & current)	Q8551, Q8552, Q8561, Q8562
	c) Check LSI IC connection to motor drive circuitry *Compare the above with OK condition DVD Module P.C.B.	IC8001 Pin 66, 67 * Check for solder short and/or component missing/damaged
3) Disc not spinning 4) Traverse not moving 5) Traverse and spindle abnormal movement	a) Check connection from DVD Module to Traverse unit	FP8251
	b) Check motor driver circuitry on the voltages and control signals *Compare the above with OK condition DVD Module P.C.B	IC8251 *Check for solder short and/or component damaged
6) Cannot read the disc but spindle motor is spinning - Cannot read CD/DVD	a) Check laser drive circuitry (voltages and current) - Check CD Laser Drive - Check DVD Laser Drive * Check voltages and LD current and compare with OK condition DVD Module P.C.B.	Q8551, Q8552, LB8531 (For DVD Laser Drive current) Q8561, Q8562, LB8561 (For CD Laser Drive current)
7) Block Noise during play	a) Check SDRAM address and data bus signal	IC8051
8) Jitter out of specification	a) Check LD current b) Check OPU (Change to other unit and confirmed operating condition)	OPU Unit (Traverse unit), FPC connection
9) Cannot read data from USB	a) Check USB connector & FFC b) Check LSI O/P c) Check IC supply (+5V)	FP9001 IC8001 Pin 144, 146 IC9005 Pin 2, 3

21 Terminal Function of IC

21.1. IC2801 (C2CBYY000468) System Microprocessor

Pin No.	Mark	I/O	Function
1	LM_L	I	Level Meter Left
2	N.C.	-	No Connection
3	N.C.	-	No connection
4	WIDE1	O	S.Video Output Control
5	DVD_PCONT	O	DVD Power Control 1
6	DVD_MUTE	I	DVD Muting Control 1
7	F_HOP	O	Frequency Hopping
9	CNVss/EFP_CNVSS	-	Flash Mode Terminal (Connected to Ground)
10	XC_IN	-	32.768 kHz Sub Clock
11	XC_OUT	-	32.768 kHz Sub Clock
12	RESET/EFP_RESET	-	Reset Input (ACTIVE L)
13	XOUT	-	10 MHz Main Clock
14	VSS	-	Ground (0V)
15	XIN	-	10 MHz Main Clock
16	VCC	-	Power Supply (+5V)
17	NMI	-	Connect to VCC (+5V)
18	RMT	I	Remote Control Input
19	N.C.	-	No Connection
20	SYNC	I	AC Failure Detect Input
21	ST/DO	I	Tuner IF Data/Stereo Input
22	SD	I	Tuner Signal Detect Input
23	KA_LAT	O	Karaoke Latch (For VK660 EE only)
24	KA_CLK	O	Karaoke Clock (For VK660EE only)
25	KA_DAT	O	Karaoke Data (For VK660EE only)
26	ASP_DATA	O	ASP DATA
27	ASP_CLK	O	ASP CLOCK
28	N.C.	-	No Connection
29	PLL_DAT	O	PLL DATA
30	PLL_CLK	O	PLL CLK
31	REG 1/EFP_TXD1	I	REGION SETTING 1 (Tuner)
32	REG 2/EFP_RXD1	I	REGION SETTING 2 (Tuner)
33	REG 3/EFP_SCLK	I	REGION SETTING 3 (Tuner)
34	EFP_BUSY	I	EFP Busy
35	DVD_CMD	O	DVD Command Signal
36	DVD_STA	I	DVD Status Signal
37	DVD_CLK	I	DVD Clock Signal
38	N.C.	-	No Connection
39	MUTE_D	O	Digital Amplifier Muting
40	MUTE_A	O	Audio Mute
41	EE_CS/EFP/EPM	O	EEPROM Chip Select
42	EE_CLK	O/I	EEPROM CLOCK
43	EE_DATA	O/I	EEPROM DATA
44	SW_LVL1	O	Subwoofer Level 1 (For VK660 only)
45	SW_LVL2	O	Subwoofer Level 2 (For VK660 only)
46	PCONT/EFP_CE	O	Power Control Output
47	DC_DET	I	DC Detect Input
48	LED_CTRL1	O	LED Drive 1
49	LED_CTRL2	O	LED Drive 2
50	MIC_LVL1	O	MIC Level 1 (For VK460/660 all series except VK660 GN)
51	MIC_LVL2	O	MIC Level 2 (For VK660 all series except VK440EE/GN)
52	HALF_1	I	DECK 1 HALF PLAYBACK INPUT
53	MODE_1	I	DECK 1 MODE PLAYBACK INPUT

Pin No.	Mark	I/O	Function
54	N.C.	-	No Connection
55	N.C.	-	No Connection
56	PLG_1	O	DECK 1 Plunger Control
57	PLG_2	O	DECK 2 Plunger Control
58	MTR	O	DECK motor control (“L” for Motor ON)
59	REC	O	Record Signal (ACTIVE: L)
60	DECK1_H	O	DECK 1 P/B selection (ACTIVE: H)
61	N.C.	-	No Connection
62	VCC	-	Power Supply (+5V)
63	N.C.	-	No Connection
64	VSS	-	Ground (0V)
65	N.C.	-	No Connection
66	N.C.	-	No Connection
67	V_JOG_A	I	Volume Jog A
68	V_JOG_B	I	Volume Jog B
69	ECHO_1	O	ECHO Level Control (Only for VK660 except EE & GN)
70	ECHO_2	O	ECHO LEvel Control (Only for VK660 EE & GN)
71	FL_RESET	-	FL Reset output
72	FL_CS	O	FL Driver Chip Select
73	FL_DOUT	O	Serial Data To FL Driver
74	FL_CLK	O	Serial Clock To FL Driver
75	ECHO_3	O	ECHO level (Only for VK660 except EE & GN)
76	ECHO_MUTE	O	ECHO Muting Control (Only for VK660 except EE & GN)
77	N.C.	-	No Connection
78	ST_SW	I	Stock Switch of CRS1
79	CCW	O	CRS1 motor CCW
80	CW	O	CRS1 motor CW
81	HOME	I	Home Switch for CRS1
82	CAM_SENSOR	I	Close Switch for CRS1
83	PLUNGER	O	Plunger for CRS1
84	BOTTOM_SW	I	Bottom Switch for CRS1
85	PLAY_SW	I	Play Switch for CRS1
86	UD_SENSOR	I	UD Sensor for CRS1
87	OPEN_SW	I	Open Switch for CRS1
88	N.C.	-	No Connection
89	DVD_REG	I/O	DVD Region setting
90	N.C.	-	No Connection
91	DECK2	I	Deck Condition Input 2(R_INHF/MODE2/HALF2)
92-94	KEY3-KEY1	I	KEY 3 to KEY 1 INPUT
95	PHOTO_2	I	Rotation Detection Signal (DECK2)
96	AVSS	-	Analog Power Supply Input (Connect to GND)
97	PHOTO_1	I	Rotation Detection Signal (DECK 1)
98	VREF	-	Reference for A-D (+5V)
99	AVCC	-	Analog Power Supply Input
100	N.C.	-	No Connection

21.2. IC6601 (C0HBB0000057) FL Driver IC

Pin No.	Mark	I/O	Function
1	N.C.	-	No Connection
2	N.C.	-	No Connection
3	N.C.	-	No Connection
4	N.C.	-	No Connection
5	OSC	I	Oscillator Input Pin (Connected to external resistor)
6	N.C.(DOUT)	O	Data Output Pin
7	DIN	I	Data Input Pin
8	CLK	I	CLOCK Input Pin
9	STB	I	Serial Interface Strobe Pin
10~11	K1~K2	I	Key Data Input Pin
12	VSS	-	Ground
13	VDD	-	Power Supply Pin
14	S1	O	Segment Output Pin 1
15	S2	O	Segment Output Pin 2
16	S3	O	Segment Output Pin 3
17	S4	O	Segment Output Pin 4
18	S5	O	Segment Output Pin 5
19	S6	O	Segment Output Pin 6
20	S7	O	Segment Output Pin 7
21	S8	O	Segment Output Pin 8
22	S9	O	Segment Output Pin 9
23	S10	O	Segment Output Pin 10
24	S11	O	Segment Output Pin 11
25	S12	O	Segment Output Pin 12
26	S13	O	Segment Output Pin 13
27	S14	O	Segment Output Pin 14
28	S15	O	Segment Output Pin 15
29	S16	O	Segment Output Pin 16
30	VEE	-	Pull Down Level
31	G12/S17	O	Segment/Grid Output Pin 12
32	G11	O	Segment/Grid Output Pin 11
33	G10	O	Segment/Grid Output Pin 10
34	G9	O	Segment/Grid Output Pin 9
35	G8	O	Segment/Grid Output Pin 8
36	G7	O	Segment/Grid Output Pin 7
37	G6	O	Segment/Grid Output Pin 6
38	G5	O	Segment/Grid Output Pin 5
39	G4	O	Segment/Grid Output Pin 4
40	G3	O	Segment/Grid Output Pin 3
41	G2	O	Segment/Grid Output Pin 2
42	G1	O	Segment/Grid Output Pin 1
43	VDD	-	Power Supply (+Vcc)
44	VSS	-	Ground

22 Exploded Views

22.1. Cabinet Parts Location

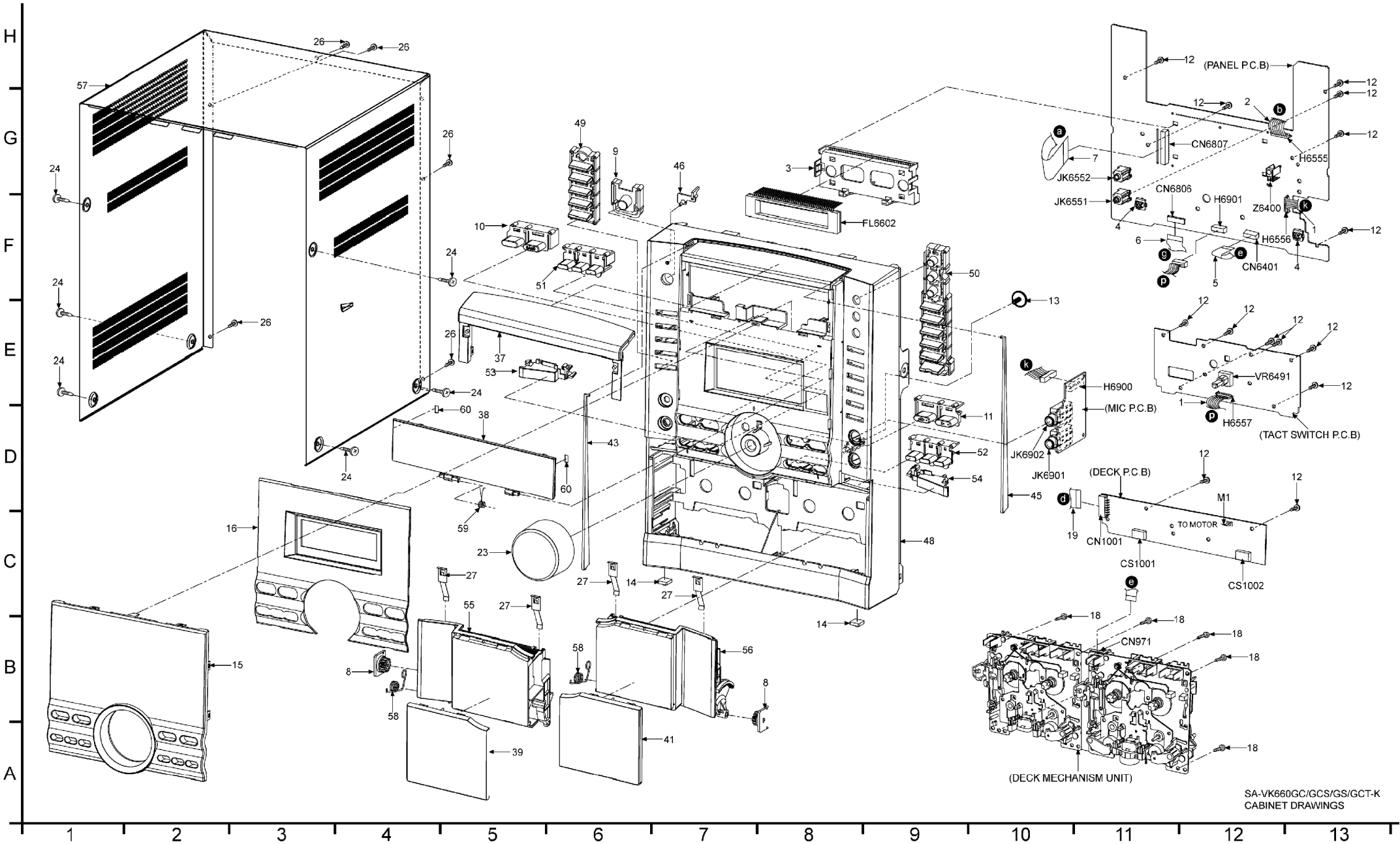

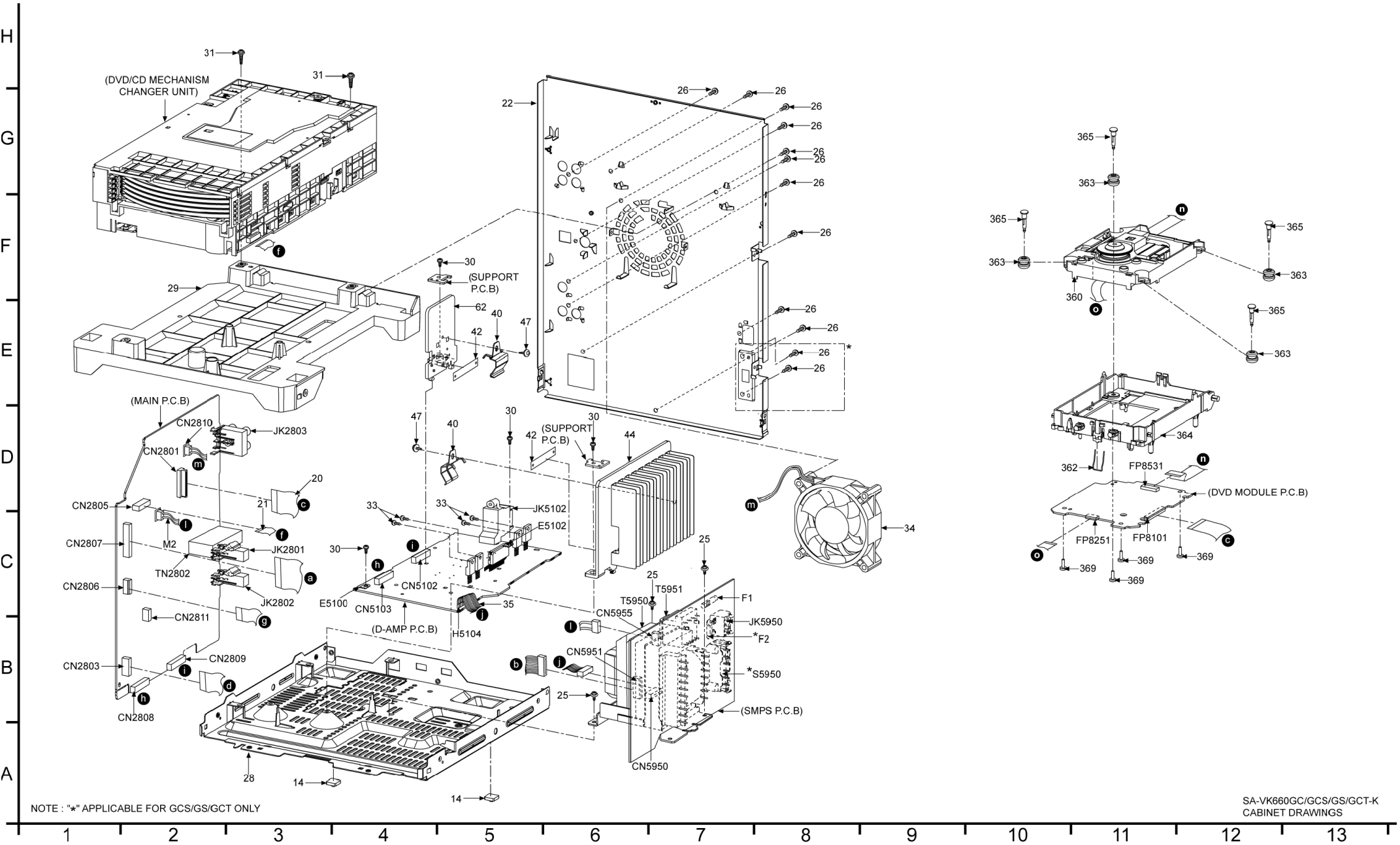

NOTE : "*" APPLICABLE FOR GCS/GS/GCT ONLY

SA-VK660GC/GCS/GS/GCT-K
CABINET DRAWINGS

22.2. Deck Mechanism Unit Parts Location (RAA4901-S)

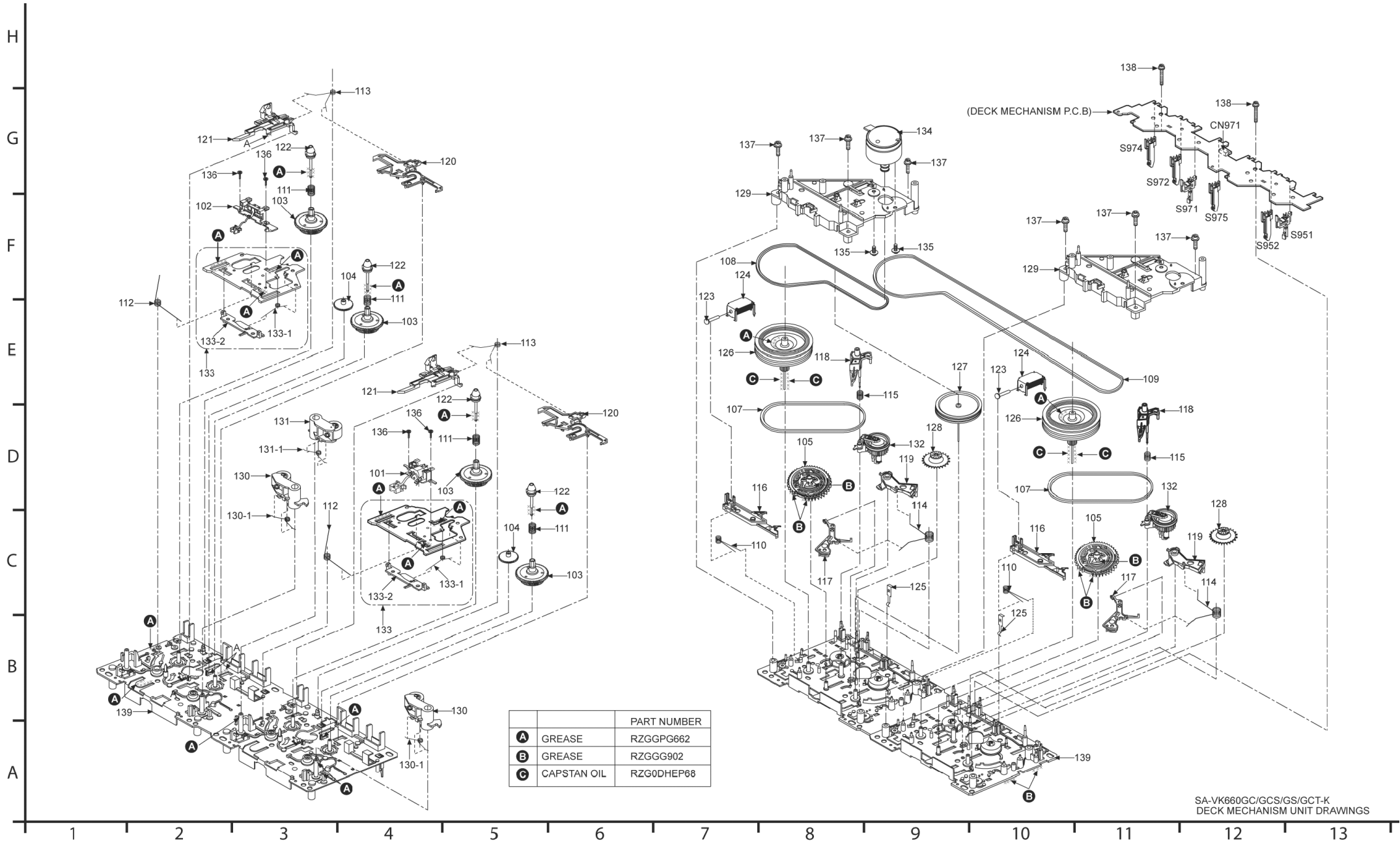

		PART NUMBER
A	GREASE	RZGGPG662
B	GREASE	RZGGG902
C	CAPSTAN OIL	RZG0DHEP68

22.3. Packaging

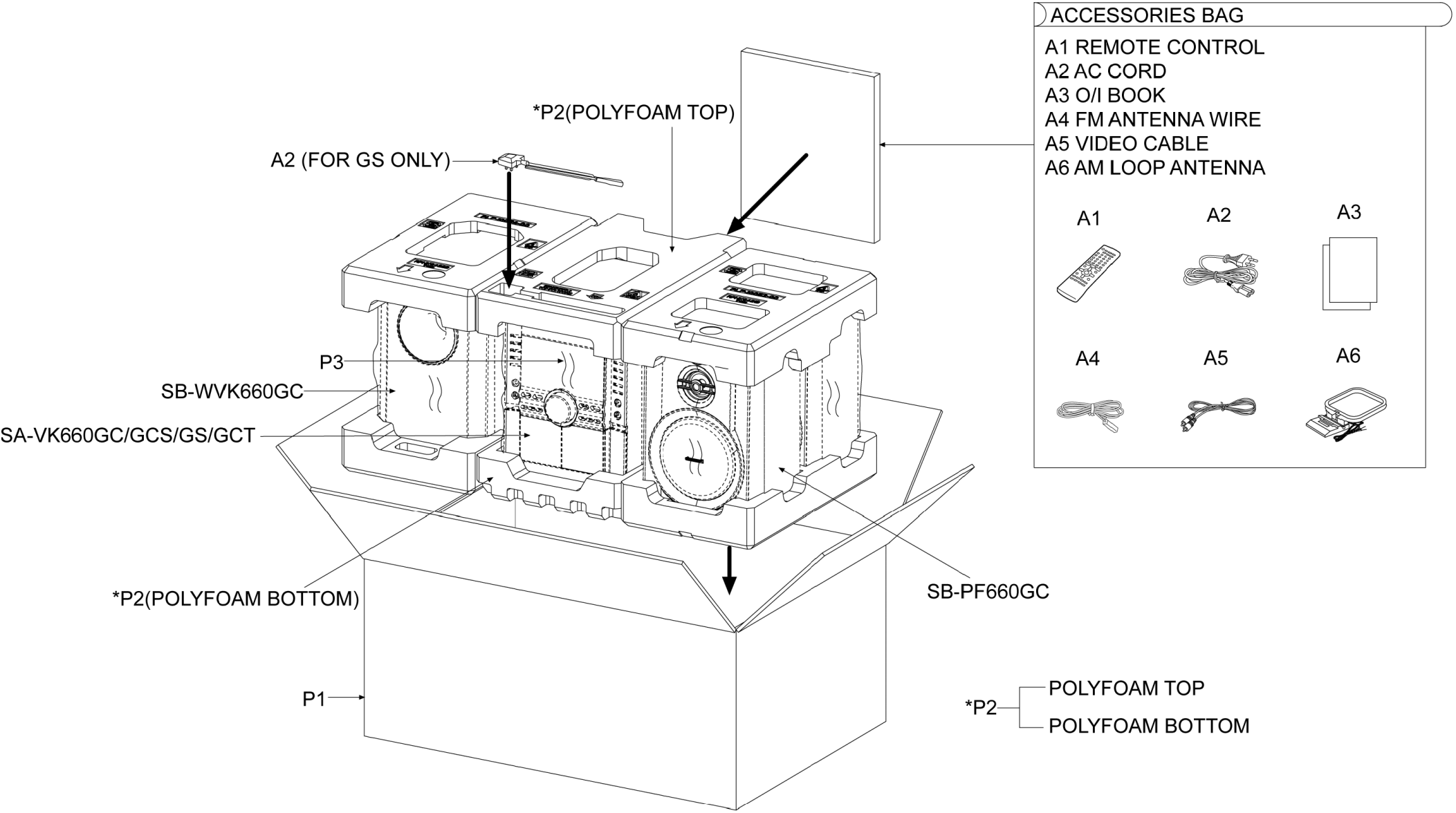

SC-VK660GC/GCS/GS/GCT-K
PACKAGING DRAWINGS

23 Replacement Parts List

Notes:

- Important safety notice:

  Components identified by ⚠ mark have special characteristics important for safety.

  Furthermore, special parts which have purposes of fire-retardent (resistors), high-quality sound (capacitors), low noise (resistors), etc are used.

  When replacing any of these components, be sure to use only manufacturer's specified parts shown in the parts list.
- The parenthesized indications in the Remarks columns specify the areas or colour. (Refer to the cover page for area or colour)

  Parts without these indications can be used for all areas.
- Warning: This product uses a laser diode. Refer to caution statements on "Precaution of Laser Diode".
- Capacitor values are in microfarads (µF) unless specified otherwise, P= Pico-farads (pF), F= Farads.
- Resistance values are in ohms, unless specified otherwise, 1K=1,000 (OHM).
- The marking (RTL) indicates that the Retention Time is limited for this items. After the discontinuation of this assembly in production, the item will continue to be available for a specific period of time. The retention period of a availability is dependent on the type of assembly, and in accordance with the laws governing part and product retention. After the end of this period, the assembly will no longer be available.
- [M] markings in the Remarks columns indicates parts supplied by **PAVCSG.**
- [SPG] markings in the Remarks columns indicates parts that are supplied by **PAVC**.
- Reference for O/I book languages are as follows:

Ar:	Arabic	Du:	Dutch	It:	Italian	Sp	Spanish
Cf:	Canadian French	En:	English	Ko:	Korean	Sw:	Swedish
Cz:	Czech	Fr:	French	Po:	Polish	Co:	Traditional Chinese
Da:	Danish	Ge:	German	Ru:	Russian	Cn:	Simplified Chinese
Pe:	Persian	Ur:	Ukraine				

23.1. Component Parts List

Ref. No.	Part No.	Part Name & Description	Remarks
		CABINET AND CHASSIS	
1	REXX0505	7P FLAT WIRE (PAN-MIC, SUBP-PAN)	[M]
2	REXX0532-1	9P FLAT WIRE (PAN-TRANS)	[M]
3	RMNX0188-1	FL HOLDER	[M]
4	RMNX0190	LED HOLDER	[M]
5	REEX0740	10P FFC WIRE (PAN-DK)	[M]
6	REEX0743	12P FFC WIRE (PAN-MN)	[M]
7	REEX0744	30P FFC WIRE (PAN-MN)	[M]
8	RXGX0002	DAMPER GEAR	[M]
9	RGUX0679-K	POWER BUTTON	[M]
10	RGUX0682-S	FUNCTION BUTTON L	[M]
11	RGUX0683-S	FUNCTION BUTTON R	[M]
12	RHD26046-L	SCREW	[M]
13	RHD30008	WASHER HEAD SCREW	[M]
14	RKA0072-KJ	LEG CUSHION	[M]
15	RKWX0263D-H	FL WINDOW	[M]
16	RMVX0094-K	FL WINDOW BACKGROUND	[M]
18	XTV3+10GFJ-M	SCREW	[M]
19	REEX0568	11P FFC WIRE (DK-MN)	[M]
20	REEX0654	50P FFC WIRE (MN-DVD)	[M]
21	REEX0747	14P FFC WIRE (MN-CDLD)	[M]
22	RGRX0059Q-A	REAR PANEL	[M]GC
22	RGRX0059R-A	REAR PANEL	[M]GS
22	RGRX0059R-B	REAR PANEL	[M]GCS
22	RGRX0059R-C	REAR PANEL	[M]GCT
23	RGWX0072-1S	VOLUME KNOB	[M]
24	RHD30007-1SJ	SCREW	[M]
25	RHD30111-3	SCREW	[M]
26	RHD30119-S	SCREW (SILVER)	[M]
27	RUS757ZAA	CASS HALF SPRING	[M]
28	RMKX0118-2	BOTTOM CHASSIS	[M]
29	RMKX0119	DVD CHASSIS	[M]
30	XTW3+10TFC	SCREW	[M]
31	XTW3+12TFJ	SCREW	[M]
33	XTB3+8JFJ	SCREW	[M]
34	L6FALEFH0030	FAN UNIT	[M]
35	REXX0325	9P FLAT WIRE (PWR-TRANS)	[M]
37	RGKX0367A-K	TOP ORNAMENT	[M]
38	RGKX0368L-K	CD LID	[M]
39	RGKX0369-1K	CASS LID ORNAMENT L	[M]
40	RMC0158-S2	TRANSISTOR HOLDER	[M]
41	RGKX0370-K	CASS LID ORNAMENT R	[M]
42	RMGX0044-1	D.AMP. INSULATOR	[M]
43	RGLX0136-Q	LIGHTING PIECE L	[M]
44	RXXX0081	HEAT SINK UNIT	[M]
45	RGLX0137-Q	LIGHTING PIECE R	[M]
46	RGLX0138-Q	POWER LIGHT PIECE	[M]
47	XTWS3+6TFJ	SCREW	[M]
48	RGPX0256-K	FRONT PANEL	[M]
49	RGUX0680-K	SOUND BUTTON	[M]
50	RGUX0681-K	CD CONTROL BUTTON	[M]
51	RGUX0684-K1	CONTROL BUTTON L	[M]
52	RGUX0685-K1	CONTROL BUTTON R	[M]
53	RGUX0686-K	DECK BUTTON L	[M]
54	RGUX0687-K	DECK BUTTON R	[M]
55	RKFX0133-K	CASS LID L	[M]
56	RKFX0134-K	CASS LID R	[M]
57	RKMX0130-K1	TOP CABINET (BENT)	[M]
58	RMBX0036	CASS OPEN SPRING	[M]
59	RMBX0049	DVD LID SPRING	[M]
60	RMG0547-K	CD LID CUSHION	[M]
62	RMYX0131-1	SUB HEAT SINK	[M]
		DECK MECHANISM	
101	RED0064-2	R/P HEAD BLOCK UNIT	[M]
102	RED0070-1	P/B HEAD BLOCK UNIT	[M]
103	RDG0300	REEL BASE GEAR	[M]
104	RDG0301	WINDING RELAY GEAR	[M]
105	RDK0026-4	MAIN GEAR	[M]

Ref. No.	Part No.	Part Name & Description	Remarks
107	RDV0033-4	WINDING BELT	[M]
108	RDV0034-2	CAPSTAN BELT A	[M]
109	RDV0071-2	CAPSTAN BELT B	[M]
110	RMB0312	TRIGGER LEVER SPRING	[M]
111	RMB0400	REEL SPRING	[M]
112	RMB0403	HEAD PANEL SPRING	[M]
113	RMB0404	BRAKE ROD SPRING	[M]
114	RMB0406-5	FR LEVER SPRING	[M]
115	RMB0408	THRUST SPRING	[M]
116	RML0370-4	TRIGGER LEVER	[M]
117	RML0371	FR LEVER	[M]
118	RML0372-2	WINDING LEVER	[M]
119	RML0374-2	EJECT LEVER	[M]
120	RMM0131-1	BRAKE ROD	[M]
121	RMM0133-1	EJECT ROD	[M]
122	RMQ0519	REEL HUB	[M]
123	RMS0398-1	MOVING CORE	[M]
124	RSJ0003	SOLENOLD ASS'Y	[M]
125	RMC0061	PACK SPRING	[M]
126	RXF0061-1	FLYWHEEL F ASS'Y	[M]
127	RXF0062-1	FLYWHEEL R ASS'Y	[M]
128	RXG0040	FF RELAY GEAR ASS'Y	[M]
129	RMK0283A-2	SUB-CHASSIS	[M]
130	RXL0124	PINCH ROLLER F ASS'Y	[M]
130-1	RMB0401	PINCH ARM SPRING F	[M]
131	RXL0125	PINCH ROLLER R ASS'Y	[M]
131-1	RMB0402	PINCH ARM SPRING R	[M]
132	RXL0126	WINDING ARM ASS'Y	[M]
133	RXQ0412-3	HEAD PANEL ASS'Y	[M]
133-1	RMB0405-1	FR ROD SPRING	[M]
133-2	RMM0132-1	FR ROD	[M]
134	REM0121	CAP MOTOR ASS'Y	[M]
135	RHD26022-1	MOTOR SCREW	[M]
136	XTW2+5LFJ	HEAD BLOCK UNIT SCRE	[M]
137	XTW26+10SFJ	SUB-CHASSIS SCREW	[M]
138	XYC2+JF17FJ	PCB EARTH SCREW	[M]
139	RFKJAA4901-S	CHASSIS ASS'Y	[M]
		TRAVERSE DECK	
360	RAE2023Z-S	TRAVERSE UNIT	[M] ⚠
362	RMEX0041	MIDDLE CHASSIS SPRING	[M]
363	RMG0598-A	FLOATING RUBBER	[M]
364	RMRX0066	MIDDLE CHASSIS	[M]
365	RMS0789	FIXED PIN	[M]
369	XTV2+6GFJ	SCREW	[M]
		PRINTED CIRCUIT BOARD	
	REPX0561E	DVD MODULE P.C.B.	[M] (RTL)GC /GS
	REPX0561F	DVD MODULE P.C.B.	[M] (RTL)GC S/GCT
	REPV0137D	MAIN P.C.B.	[M] (RTL)GC /GS
	REPV0137E	MAIN P.C.B.	[M] (RTL)GC S/GCT
	REPV0139B	PANEL P.C.B.	[M] (RTL)
	REPV0139B	TACT SWITCH P.C.B.	[M] (RTL)
	REPV0139B	MIC P.C.B.	[M] (RTL)
	REPV0139B	DECK P.C.B.	[M] (RTL)
	REPX0321B	DECK MECHANISM P.C.B.	[M] (RTL)
	REPV0138B	D-AMP P.C.B.	[M] (RTL)
	REPX0519F	SMPS P.C.B.	[M] (RTL)GC

Ref. No.	Part No.	Part Name & Description	Remarks
	REPX0519D	SMPS P.C.B.	[M] (RTL) GS/GCS/ GCT
		INTEGRATED CIRCUITS	
IC951	CNB13030R2AU	PHOTO INTERRUPTOR	[M]
IC971	CNB13030R2AU	PHOTO INTERRUPTOR	[M]
IC1001	AN7348S-E1	IC P.B EQ/ REC AMP/ ALC/ TPS AMP	[M]
IC1004	C1AA00000612	IC R/P SELECT	[M]
IC2061	C0ABBB000244	IC OP-AMP	[M]
IC2101	C1BB00000732	IC AUDIO SIGNAL PROCESSOR	[M]
IC2103	C0ABBB000230	IC OP-AMP	[M]
IC2561	C0DAAMH00012	IC SWITCHING REGULATOR	[M]
IC2701	C9ZB00000498	IC VIDEO BUFFER	[M]
IC2801	C2CBYY000468	IC MICROPROCESSOR	[M]
IC2804	C0AABA000009	IC OP-AMP	[M]
IC5201	C0JBAB000011	IC INVERTER	[M]
IC5301	C1BA00000487	IC 2 CH DIGITAL AMP	[M]
IC5501	C1BA00000487	IC 2 CH DIGITAL AMP	[M]
IC6601	C0HBB0000057	IC FL DRIVER	[M]
IC6930	C0ABBB000244	IC OP-AMP	[M]
IC6931	C1AB00002773	IC ECHO PROCESSOR	[M]
IC8001	MN2DS0018DP	IC DV5.0 LSI	[M]
IC8051	C3ABPG000145	IC 64M SDRAM	[M]
IC8111	C0CBCBD00018	IC +3.3V DC-DC CONVERTER	[M]
IC8151	C0DBEHG00006	IC +1.2V REGULATOR	[M]
IC8251	C0GBG0000048	IC MOTOR DRIVE	[M]
IC8420	C0FBBK000049	IC 2CH AUDIO DAC	[M]
IC8601	C0EBA0000029	IC RESET	[M]
IC8606	C0EBE0000455	IC RESET	[M]
IC8651	RFKWMHB0X160	IC 116M FLASH MEMORY	[SPG] (GC/GS)
IC8651	RFKWMHB0Y160	IC 16M FLASH MEMORY	[SPG] (GCS/ GCT)
IC8691	C0JBAA000346	IC AND GATE	[M]
IC8695	C0JBAA000346	IC AND GATE	[M]
		TRANSISTORS	
Q1003	B1AAGC000007	TRANSISTOR	[M]
Q1004	B1AAGC000007	TRANSISTOR	[M]
Q1005	B1AAGC000007	TRANSISTOR	[M]
Q1007	B1ABCF000176	TRANSISTOR	[M]
Q1017	B1AARC000003	TRANSISTOR	[M]
Q2051	B1GDCFJJ0047	TRANSISTOR	[M]
Q2052	B1GFECYY0001	TRANSISTOR	[M]
Q2061	B1ABCF000176	TRANSISTOR	[M]
Q2062	B1ABCF000176	TRANSISTOR	[M]
Q2063	B1GDCFJJ0047	TRANSISTOR	[M]
Q2064	B1GDCFJJ0047	TRANSISTOR	[M]
Q2065	B1ABCF000176	TRANSISTOR	[M]
Q2142	B1ABCF000176	TRANSISTOR	[M]
Q2143	B1ABEB000002	TRANSISTOR	[M]
Q2242	B1ABCF000176	TRANSISTOR	[M]
Q2243	B1ABEB000002	TRANSISTOR	[M]
Q2366	B1GFECYY0001	TRANSISTOR	[M]
Q2501	B1GDCFJJ0047	TRANSISTOR	[M]
Q2502	B1GFECYY0001	TRANSISTOR	[M]
Q2551	B1ADCF000001	TRANSISTOR	[M]
Q2552	B1ACKD000006	TRANSISTOR	[M]
Q2576	B1GBCFJA0028	TRANSISTOR	[M]
Q2806	B1GBCFLL0037	TRANSISTOR	[M]
Q2901	B1GBCFJN0033	TRANSISTOR	[M]
Q2912	B1GBCFJN0033	TRANSISTOR	[M]
Q2913	B1GBCFJJ0051	TRANSISTOR	[M]
Q2914	B1ACKD000006	TRANSISTOR	[M]
Q2942	B1ACKD000006	TRANSISTOR	[M]
Q2943	B1ABCF000176	TRANSISTOR	[M]
Q2948	B1ABCF000176	TRANSISTOR	[M]
Q2949	B1ABCF000176	TRANSISTOR	[M]
Q2978	B1GDCFJJ0047	TRANSISTOR	[M]

Ref. No.	Part No.	Part Name & Description	Remarks
Q2979	B1GDCFJJ0047	TRANSISTOR	[M]
Q2980	B1ABCF000176	TRANSISTOR	[M]
Q5101	B1DEGM000026	TRANSISTOR	[M]
Q5102	B1DEGM000026	TRANSISTOR	[M]
Q5103	B1ABCF000176	TRANSISTOR	[M]
Q5104	B1ABCF000176	TRANSISTOR	[M]
Q5108	B1ABCF000176	TRANSISTOR	[M]
Q5109	2SB0709AHL	TRANSISTOR	[M]
Q5110	B1AACF000064	TRANSISTOR	[M]
Q5111	B1BACG000048	TRANSISTOR	[M]
Q5112	B1BCCG000023	TRANSISTOR	[M]
Q5113	B1GDCFNA0001	TRANSISTOR	[M]
Q5114	B1ABCF000176	TRANSISTOR	[M]
Q5115	B1AAKD000014	TRANSISTOR	[M]
Q5150	B1GDCFJJ0047	TRANSISTOR	[M]
Q5151	B1GDCFJJ0047	TRANSISTOR	[M]
Q5152	B1ABCF000176	TRANSISTOR	[M]
Q5201	B1ABCF000176	TRANSISTOR	[M]
Q5202	B1ADCF000063	TRANSISTOR	[M]
Q5707	B1BACD000018	TRANSISTOR	[M]
Q5708	B1ACCF000094	TRANSISTOR	[M]
Q5709	B1BCCD000019	TRANSISTOR	[M]
Q5950	B1BACD000018	TRANSISTOR	[M]
Q5951	2SB0621AHA	TRANSISTOR	[M]
Q5952	B1GACFJJ0018	TRANSISTOR	[M]
Q5953	B1AACF000064	TRANSISTOR	[M]
Q5954	B1AAKD000012	TRANSISTOR	[M]GS/G CS/GCT
Q6411	B1ACKD000006	TRANSISTOR	[M]
Q6415	B1ACKD000006	TRANSISTOR	[M]
Q6421	B1GBCFJJ0051	TRANSISTOR	[M]
Q6425	B1GBCFJJ0051	TRANSISTOR	[M]
Q6701	B1GBCFJN0033	TRANSISTOR	[M]
Q6702	B1GBCFJN0033	TRANSISTOR	[M]
Q6703	B1GBCFJN0033	TRANSISTOR	[M]
Q6803	B1ACCF000094	TRANSISTOR	[M]
Q6804	B1ACCF000094	TRANSISTOR	[M]
Q6805	B1GACFJJ0018	TRANSISTOR	[M]
Q6901	B1ABCF000176	TRANSISTOR	[M]
Q6902	B1ABCF000176	TRANSISTOR	[M]
Q6903	B1ABCF000176	TRANSISTOR	[M]
Q6904	B1ABCF000176	TRANSISTOR	[M]
Q6905	B1ABCF000176	TRANSISTOR	[M]
Q6906	B1GBCFJJ0051	TRANSISTOR	[M]
Q6907	B1GBCFJJ0051	TRANSISTOR	[M]
Q6908	B1GBCFJJ0051	TRANSISTOR	[M]
Q6909	B1GBCFJJ0051	TRANSISTOR	[M]
Q6910	B1GDCFJJ0047	TRANSISTOR	[M]
Q6911	B1GDCFJJ0047	TRANSISTOR	[M]
Q6912	B1ABCF000176	TRANSISTOR	[M]
Q6913	B1ABGC000001	TRANSISTOR	[M]GCS/ GCT
Q8321	2SB1218ARL	TRANSISTOR	[M]
Q8325	2SB1218ARL	TRANSISTOR	[M]
Q8331	2SB1218ARL	TRANSISTOR	[M]
Q8335	2SB1218ARL	TRANSISTOR	[M]
Q8341	2SB1218ARL	TRANSISTOR	[M]
Q8551	2SD1819A0L	TRANSISTOR	[M]
Q8552	B1ADGB000008	TRANSISTOR	[M]
Q8561	2SD1819A0L	TRANSISTOR	[M]
Q8562	B1ADGB000008	TRANSISTOR	[M]
QR8111	XP0621400L	CHIP TRANSISTOR	[M]
QR8420	UNR521100L	CHIP TRANSISTOR	[M]
QR8571	UNR511V00L	CHIP TRANSISTOR	[M]
		DIODES	
D951	MA2C16500E	DIODE	[M]
D971	MA2C16500E	DIODE	[M]
D1003	B0ACCK000005	DIODE	[M]
D2063	B0BC9R1A0218	DIODE	[M]
D2241	B0ACEL000004	DIODE	[M]
D2311	B0BC4R300002	DIODE	[M]

Ref. No.	Part No.	Part Name & Description	Remarks
D2332	B0ADCC000002	DIODE	[M]
D2411	B0BC4R300002	DIODE	[M]
D2551	B0ACEL000004	DIODE	[M]
D2552	B0BC7R500001	DIODE	[M]
D2553	B0JCPD000025	DIODE	[M]
D2555	B0EAKM000117	DIODE	[M]
D2556	B0EAKM000117	DIODE	[M]
D2557	B0EAKM000117	DIODE	[M]
D2576	B0ADCJ000020	DIODE	[M]
D2578	B0ACEL000004	DIODE	[M]
D2731	B0BC5R000009	DIODE	[M]
D2801	B0ACEL000004	DIODE	[M]
D2802	B0ADCJ000020	DIODE	[M]
D2804	B0ACEL000004	DIODE	[M]
D2911	B0ACEL000004	DIODE	[M]
D2912	B0EAKM000117	DIODE	[M]
D2944	B0BC5R600003	DIODE	[M]
D2946	B0ADCJ000020	DIODE	[M]
D5101	B0BA01100004	DIODE	[M]
D5102	B0BA02600018	DIODE	[M]
D5103	B0BA5R100013	DIODE	[M]
D5104	B0BA01100004	DIODE	[M]
D5105	B0BA02300017	DIODE	[M]
D5107	B0BA01500003	DIODE	[M]
D5108	B0BA5R700008	DIODE	[M]
D5109	B0BA01100004	DIODE	[M]
D5121	B0EAKM000122	DIODE	[M]
D5122	B0EAKM000122	DIODE	[M]
D5123	B0EAKM000122	DIODE	[M]
D5124	B0EAKM000122	DIODE	[M]
D5125	B0AACK000004	DIODE	[M]
D5126	B0ACEL000004	DIODE	[M]
D5127	B0EAKM000122	DIODE	[M]
D5128	B0EAKM000122	DIODE	[M]
D5129	B0EAKM000122	DIODE	[M]
D5130	B0HCMM000019	DIODE	[M]
D5131	B0HCMM000019	DIODE	[M]
D5132	B0HCMM000019	DIODE	[M]
D5133	B0HCMM000019	DIODE	[M]
D5134	B0HCMM000019	DIODE	[M]
D5135	B0HCMM000019	DIODE	[M]
D5152	B0BA01900005	DIODE	[M]
D5709	B0BA9R600002	DIODE	[M]
D5950	B0EAMM000038	DIODE	[M]
D5951	B0EAMM000038	DIODE	[M]
D5952	B0EAMM000038	DIODE	[M]
D5953	B0EAMM000038	DIODE	[M]
D5958	B0EAKM000117	DIODE	[M]
D5959	B0EAKM000117	DIODE	[M]
D5960	B0BA03000020	DIODE	[M]
D5961	B0AACK000004	DIODE	[M]
D5962	B0AACK000004	DIODE	[M]
D5963	B0AACK000004	DIODE	[M]GC
D5964	B0BA6R800008	DIODE	[M]
D5965	B0AACK000004	DIODE	[M]
D5966	B0AACK000004	DIODE	[M]
D5967	B0AACK000004	DIODE	[M]GS/GCS/GCT
D5968	B0AACK000004	DIODE	[M]GS/GCS/GCT
D5969	B0AACK000004	DIODE	[M]GS/GCS/GCT
D5970	B0EAKM000117	DIODE	[M]
D5971	B0EAKM000117	DIODE	[M]
D5972	B0EAKM000117	DIODE	[M]
D5973	B0EAKM000117	DIODE	[M]
D5974	B0EAKM000117	DIODE	[M]
D5975	B0EAKM000117	DIODE	[M]
D5976	B0EAKM000117	DIODE	[M]
D5977	B0EAKM000117	DIODE	[M]
D5986	B0AACK000004	DIODE	[M]GC
D5987	B0AACK000004	DIODE	[M]GC
D6458	B3AAA0000803	DIODE	[M]
D6481	B0BC5R600003	DIODE	[M]

Ref. No.	Part No.	Part Name & Description	Remarks
D6635	B0BC5R600003	DIODE	[M]
D6701	B0BC8R100004	DIODE	[M]
D6702	B0BC8R100004	DIODE	[M]
D6707	B3AEA0000083	DIODE	[M]
D6708	B3AEA0000083	DIODE	[M]
D6803	B0ACCE000003	DIODE	[M]
D6930	B0BC5R000009	DIODE	[M]
D6931	B0ACEL000004	DIODE	[M]
D6932	B0ACEL000004	DIODE	[M]
D6933	B0ACEL000004	DIODE	[M]
D8211	MA2J11100L	DIODE	[M]
D8571	MA2J72800L	DIODE	[M]
		VARIABLE RESISTORS	
VR6491	EVEKE2F2524B	VR VOLUME ENCODER	[M]
		SWITCHES	
S951	K0J1BB000017	SW MODE	[M]
S952	K0J1BB000021	SW HALF	[M]
S971	K0J1BB000017	SW MODE	[M]
S972	K0J1BB000021	SW HALF	[M]
S974	K0J1BB000021	SW RECINH_R	[M]
S975	K0J1BB000021	SW RECINH_F	[M]
S5950	K0ABLB000003	SW VOLTAGE SELECTOR	[M] GS/GCS/GCT ⚠
S6101	EVQ21405RJ	SW POWER	[M]
S6102	EVQ21405RJ	SW ADVANCE SURROUND	[M]
S6103	EVQ21405RJ	SW S.SEQ	[M]
S6104	EVQ21405RJ	SW SOUND EQ	[M]
S6105	EVQ21405RJ	SW SUBWOOFER	[M]
S6107	EVQ21405RJ	SW DECK 1	[M]
S6201	EVQ21405RJ	SW TAPE	[M]
S6202	EVQ21405RJ	SW DVD/CD	[M]
S6203	EVQ21405RJ	SW FWD	[M]
S6204	EVQ21405RJ	SW STOP	[M]
S6205	EVQ21405RJ	SW REW	[M]
S6206	EVQ21405RJ	SW REC	[M]
S6207	EVQ21405RJ	SW DECK 2	[M]
S6208	EVQ21405RJ	SW DISPLAY/DEMO	[M]
S6209	EVQ21405RJ	SW MUSIC PORT	[M]
S6210	EVQ21405RJ	SW TUNER	[M]
S6302	EVQ21405RJ	SW MULTI CHANGE	[M]
S6303	EVQ21405RJ	SW OPEN/CLOSE	[M]
S6304	EVQ21405RJ	SW SINGLE CHANGE	[M]
S6305	EVQ21405RJ	SW DISC 1	[M]
S6306	EVQ21405RJ	SW DISC 2	[M]
S6307	EVQ21405RJ	SW DISC 3	[M]
S6308	EVQ21405RJ	SW DISC 4	[M]
S6309	EVQ21405RJ	SW DISC 5	[M]
S6310	EVQ21405RJ	SW MIC VOL +	[M]
S6311	EVQ21405RJ	SW MIC VOL -	[M]
S6312	EVQ21405RJ	SW DECK 2	[M]
		CONNECTORS	
CN971	K1MN10B00104	10P FFC CONNECTOR	[M]
CN1001	K1MN11B00016	11P CONNECTOR	[M]
CN2801	K1MY50AA0029	50P CONNECTOR	[M]
CN2803	K1MN11A00008	11P CONNECTOR	[M]
CN2805	K1MN14A00049	14P FFC CONNECTOR	[M]
CN2806	K1MN16A00073	16P FFC CONNECTOR	[M]
CN2807	K1MN30AA0004	30P CONNECTOR	[M]
CN2808	K1KB12B00037	12P CONNECTOR	[M]
CN2809	K1KB12B00037	12P CONNECTOR	[M]
CN2810	K1KA02AA0186	FAN CONNECTOR	[M]
CN2811	K1MN08A00064	8P CONNECTOR	[M]
CN5102	K1KA12AA0031	12P CONNECTOR	[M]
CN5103	K1KA12AA0031	12P CONNECTOR	[M]
CN5950	K1KA09AA0319	9P CONNECTOR	[M]
CN5951	K1KA09AA0193	9P CONNECTOR	[M]
CN5955	K1KA03AA0190	3P CONNECTOR	[M]

Ref. No.	Part No.	Part Name & Description	Remarks
CN6401	K1MN10B00104	10P FFC CONNECTOR	[M]
CN6806	K1MN16B00133	16P FFC CONNECTOR	[M]
CN6807	K1MN30AA0004	30P CONNECTOR	[M]
CS1001	K1MY05AA0043	5P CONNECTOR	[M]
CS1002	K1MY05AA0043	5P CONNECTOR	[M]
FP8101	K1MN50BA0173	50P FFC CONNECTOR	[M]
FP8251	K1MN06BA0148	6P FFC CONNECTOR	[M]
FP8531	K1MY26BA0025	26P CONNECTOR	[M]
		COILS & TRANSFORMERS	
L1001	G0C470JA0052	RF CHOKE COIL	[M]
L1002	G2ZZ00000024	BIAS OCS COIL	[M]
L2551	G0A101ZA0028	CHOKE COIL	[M]
L2555	G0A100D00002	10UH CHOKE COIL	[M]
L2901	J0JCC0000120	COIL	[M]
L2902	J0JCC0000120	COIL	[M]
L2903	J0JCC0000120	COIL	[M]
L2905	ERJ3GEY0R00V	CHIP JUMPER	[M]
L2906	J0JCC0000120	COIL	[M]
L2907	J0JCC0000120	COIL	[M]
L2908	J0JCC0000120	COIL	[M]
L2909	J0JBC0000019	CHIP INDUCTOR	[M]
L2912	G0A100D00002	10UH CHOKE COIL	[M]
L2913	G0A100G00005	RF CHOKE COIL	[M]GC/GS
L5101	J0JKB0000037	FILTER	[M]
L5102	J0JKB0000037	FILTER	[M]
L5301	G0B185LA0002	COIL	[M]
L5302	G0B9R5K00001	CHOKE COIL	[M]
L5401	G0B9R5K00001	CHOKE COIL	[M]
L5402	G0B9R5K00001	CHOKE COIL	[M]
L5501	G0B185LA0002	COIL	[M]
L5502	J0JKB0000037	FILTER	[M]
L5503	J0JKB0000037	FILTER	[M]
L5950	ELF15N035AN	LINE FILTER	[M] GS/GCS/GCT ⚠
L6551	G0C100JA0052	INDUCTOR	[M]
L6552	G0C101JA0052	INDUCTOR	[M]
L6553	G0C101JA0052	INDUCTOR	[M]
L6554	G0C100JA0052	INDUCTOR	[M]
L6555	G0C101JA0052	INDUCTOR	[M]
L6556	G0C101JA0052	INDUCTOR	[M]
L6901	G0C3R3JA0052	COIL	[M]
L6902	G0C100JA0052	INDUCTOR	[M]
L8201	G1C100K00019	CHIP COIL	[M]
L8301	G1C100K00019	CHIP COIL	[M]
L8302	G1C100K00019	CHIP COIL	[M]
L8330	G1C100K00019	CHIP COIL	[M]
L8501	G1C100K00019	CHIP COIL	[M]
L8550	G1C100KA0055	CHIP INDUCTOR	[M]
LB8001	J0JHC0000045	CHIP INDUCTOR	[M]
LB8011	J0JHC0000045	CHIP INDUCTOR	[M]
LB8257	ERJ3GEY0R00V	CHIP JUMPER	[M]
LB8258	ERJ3GEY0R00V	CHIP JUMPER	[M]
LB8259	ERJ3GEY0R00V	CHIP JUMPER	[M]
LB8260	ERJ3GEY0R00V	CHIP JUMPER	[M]
LB8301	J0JBC0000042	CHIP BEAD	[M]
LB8302	J0JBC0000042	CHIP BEAD	[M]
LB8303	J0JBC0000042	CHIP BEAD	[M]
LB8304	J0JBC0000042	CHIP BEAD	[M]
LB8305	J0JBC0000042	CHIP BEAD	[M]
LB8401	J0JBC0000042	CHIP BEAD	[M]
LB8421	ERJ2GE0R00X	CHIP JUMPER	[M]
LB8422	ERJ2GE0R00X	CHIP JUMPER	[M]
LB8423	ERJ2GE0R00X	CHIP JUMPER	[M]
LB8424	ERJ2GE0R00X	CHIP JUMPER	[M]
LB8491	ERJ2GE0R00X	CHIP JUMPER	[M]
LB8530	J0JHC0000045	CHIP INDUCTOR	[M]
LB8531	ERJ2GE0R00X	CHIP JUMPER	[M]

Ref. No.	Part No.	Part Name & Description	Remarks
LB8551	J0JBC0000042	CHIP BEAD	[M]
LB8561	J0JBC0000042	CHIP BEAD	[M]
LB8571	J0JBC0000042	CHIP BEAD	[M]
LB8690	J0JBC0000106	CHIP BEAD	[M]
LB8691	ERJ2GEJ101X	CHIP RESISTOR	[M]
LB8692	ERJ2GEJ101X	CHIP RESISTOR	[M]
LB8693	ERJ2GEJ101X	CHIP RESISTOR	[M]
T5950	G4CYBYY00013	MAIN TRANSFORMER	[M] ⚠
T5951	G4C2AAJ00005	SUB TRANSFORMER	[M] ⚠
TN2802	ENG06839QF	TUNER PACK	[M]
		COMPONENT COMBINATION	
Z971	RGSD12A1445T	RADA RESISTOR	[M]
Z5950	ERZV10V511CS	ZENER	[M] ⚠
Z6400	B3RAB0000025	REMOTE SENSOR	[M]
		RELAY	
RL5950	K6B1AEA00015	POWER RELAY	[M] ⚠
		OSCILLATORS	
X2801	H0A327200115	CRYSTAL OSCILLATOR	[M]
X2802	H2B100500004	CERAMIC RESONATOR	[M]
X5201	H2A415300001	CRYSTAL OSCILLATOR	[M]
X5202	H2A375300003	CRYSTAL OSCILLATOR	[M]
X8621	H0J270500085	CRYSTAL OSCILLATOR	[M]
		DISPLAY TUBE	
FL6602	A2BD00000178	FL DISPLAY	[M]
		FUSES	
F1	K5D122BLA014	FUSE	[M]GC ⚠
F1	K5D252BLA013	FUSE	[M] GS/GCS/GCT ⚠
F2	K5D122BLA014	FUSE	[M] GS/GCS/GCT ⚠
		FUSE HOLDERS	
FC1	EYF52BCY	FUSE CLIP	[M]
FC2	EYF52BCY	FUSE CLIP	[M]
FC3	EYF52BCY	FUSE CLIP	[M]GS/GCS/GCT
FC4	EYF52BCY	FUSE CLIP	[M]GS/GCS/GCT
		FUSE PROTECTORS	
FP5100	K5G401A00008	FUSE PROTECTOR	[M] ⚠
FP5950	K5G402A00025	FUSE PROTECTOR	[M] ⚠
		HOLDERS	
H5104	K1YF09000001	9P WIRE HOLDER	[M]
H6555	K1YZ09000002	9P CABLE HOLDER	[M]
H6556	K1YZ07000001	7P WIRE HOLDER	[M]
H6557	K1YZ07000001	7P WIRE HOLDER	[M]
H6900	K1KA07AA0193	7P CONNECTOR	[M]
H6901	K1KA07AA0193	7P CONNECTOR	[M]
		JACKS	
JK2801	K2HA1YYB0004	JK S.W.	[M]
JK2802	K2HA204B0153	JK CONNECTOR	[M]
JK2803	K2HA4YYB0002	JK I/O	[M]
JK5102	K4AC06B00008	JK SPEAKER	[M]

Ref. No.	Part No.	Part Name & Description	Remarks
JK5950	K2AA2B000011	JK AC INLET	[M] ⚠
JK6551	K2HC103A0024	JK HP	[M]
JK6552	K2HC1YYA0002	JK MUSIC PORT	[M]
JK6901	K2HB102J0038	JK MIC2	[M]
JK6902	K2HB102J0038	JK MIC1	[M]
		EARTH TERMINALS	
E5100	K4CZ01000027	EARTH LUG	[M]
E5102	K4CZ01000027	EARTH LUG	[M]
		WIRES	
M1	RWJ0102050CK	MAIN TO MECHA MOTOR	[M]
M2	REXX0479-1	2P FLAT WIRE (MN-TRANS)	[M]
		CHIP JUMPERS	
W1039	ERJ3GEY0R00V	CHIP JUMPER	[M]
W2000	ERJ3GEY0R00V	CHIP JUMPER	[M]
W2001	ERJ3GEY0R00V	CHIP JUMPER	[M]
W2002	ERJ3GEY0R00V	CHIP JUMPER	[M]
W2003	ERJ3GEY0R00V	CHIP JUMPER	[M]
W2044	ERJ3GEY0R00V	CHIP JUMPER	[M]
W2045	ERJ3GEY0R00V	CHIP JUMPER	[M]
W2046	ERJ3GEY0R00V	CHIP JUMPER	[M]
W2047	ERJ3GEY0R00V	CHIP JUMPER	[M]
W2048	ERJ3GEY0R00V	CHIP JUMPER	[M]
W2127	ERJ6GEY0R00V	CHIP JUMPER	[M]
W2128	ERJ6GEY0R00V	CHIP JUMPER	[M]
W2161	ERJ3GEY0R00V	CHIP JUMPER	[M]
W2821	ERJ3GEY0R00V	CHIP JUMPER	[M]
W2825	ERJ3GEY0R00V	CHIP JUMPER	[M]
W2832	ERJ3GEY0R00V	CHIP JUMPER	[M]
W2833	ERJ3GEY0R00V	CHIP JUMPER	[M]
W2834	ERJ3GEY0R00V	CHIP JUMPER	[M]
W2835	ERJ3GEY0R00V	CHIP JUMPER	[M]
W2840	ERJ3GEY0R00V	CHIP JUMPER	[M]
W2842	ERJ3GEY0R00V	CHIP JUMPER	[M]
W2863	ERJ3GEY0R00V	CHIP JUMPER	[M]
W2903	ERJ3GEY0R00V	CHIP JUMPER	[M]
W2911	ERJ3GEY0R00V	CHIP JUMPER	[M]
W2912	ERJ3GEY0R00V	CHIP JUMPER	[M]
W2913	ERJ3GEY0R00V	CHIP JUMPER	[M]
W2918	ERJ3GEY0R00V	CHIP JUMPER	[M]
W2940	ERJ3GEY0R00V	CHIP JUMPER	[M]
W2942	ERJ3GEY0R00V	CHIP JUMPER	[M]
W2944	ERJ3GEY0R00V	CHIP JUMPER	[M]
W2958	ERJ3GEY0R00V	CHIP JUMPER	[M]
W2961	ERJ3GEY0R00V	CHIP JUMPER	[M]
W2962	ERJ3GEY0R00V	CHIP JUMPER	[M]
W2972	ERJ3GEY0R00V	CHIP JUMPER	[M]
W2973	ERJ3GEY0R00V	CHIP JUMPER	[M]
W2974	ERJ3GEY0R00V	CHIP JUMPER	[M]
W2975	ERJ3GEY0R00V	CHIP JUMPER	[M]
W3002	ERJ3GEY0R00V	CHIP JUMPER	[M]
W5500	ERJ3GEY0R00V	CHIP JUMPER	[M]
W5501	ERJ3GEY0R00V	CHIP JUMPER	[M]
W5502	ERJ3GEY0R00V	CHIP JUMPER	[M]
W5503	ERJ3GEY0R00V	CHIP JUMPER	[M]
W5504	ERJ3GEY0R00V	CHIP JUMPER	[M]
W5505	ERJ3GEY0R00V	CHIP JUMPER	[M]
W5519	ERJ3GEY0R00V	CHIP JUMPER	[M]
W6802	ERJ3GEY0R00V	CHIP JUMPER	[M]
W6803	ERJ3GEY0R00V	CHIP JUMPER	[M]
W6804	ERJ3GEY0R00V	CHIP JUMPER	[M]
W6806	ERJ3GEY0R00V	CHIP JUMPER	[M]
W6807	ERJ3GEY0R00V	CHIP JUMPER	[M]
W6808	ERJ3GEY0R00V	CHIP JUMPER	[M]
W6809	ERJ3GEY0R00V	CHIP JUMPER	[M]
W6811	ERJ3GEY0R00V	CHIP JUMPER	[M]
W6818	ERJ3GEY0R00V	CHIP JUMPER	[M]
W6819	ERJ3GEY0R00V	CHIP JUMPER	[M]
W6826	ERJ3GEY0R00V	CHIP JUMPER	[M]

Ref. No.	Part No.	Part Name & Description	Remarks
W6882	ERJ3GEY0R00V	CHIP JUMPER	[M]
W6883	ERJ3GEY0R00V	CHIP JUMPER	[M]
W6884	ERJ3GEY0R00V	CHIP JUMPER	[M]
W6885	ERJ3GEY0R00V	CHIP JUMPER	[M]
W6886	ERJ3GEY0R00V	CHIP JUMPER	[M]
W6887	ERJ3GEY0R00V	CHIP JUMPER	[M]
W8881	ERJ3GEY0R00V	CHIP JUMPER	[M]
		PACKING MATERIALS	
P1	RPGV0422	PACKING CASE	[M]GC
P1	RPGV0423	PACKING CASE	[M]GS
P1	RPGV0424	PACKING CASE	[M]GCS
P1	RPGV0425	PACKING CASE	[M]GCT
P2	RPNV0140	POLYFOAM	[M]
P3	RPFX0198	MIRAMAT SHEET	[M]
		ACCESSORIES	
A1	N2QAYB000161	REMOTE CONTROL	[M]
A1-1	RKK-HTR0051K	R/C BATTERY COVER	[M]
A2	K2CQ2CA00007	AC CORD	[M] GC/ GCS/ GS ⚠
A2	K2CP2YY00001	AC CORD	[M]GCT ⚠
A2	K2CT3CA00004	AC CORD	[M]GS ⚠
A3	RQTV0236-G	O/I BOOK	[M]
A4	RSA007-L1	FM ANTENNA WIRE	[M]
A5	K2KA2CA00011	VIDEO CABLE	[M]
A6	N1DAAAA00001	AM LOOP ANTENNA	[M]
		RESISTORS	
R952	ERDS2TJ821T	820 1/4W	[M]
R953	ERDS2TJ393T	39K 1/4W	[M]
R972	ERDS2TJ821T	820 1/4W	[M]
R973	ERDS2TJ393T	39K 1/4W	[M]
R1002	ERJ3GEY0R00V	0 1/16W	[M]
R1003	ERJ3GEYJ103V	10K 1/16W	[M]
R1004	D0GB152JA007	1.5K 1/16W	[M]
R1005	D0GB472JA007	4.7K 1/16W	[M]
R1007	ERD25FVJ4R7T	4.7 1/4W	[M]
R1009	D0GB183JA007	18K 1/16W	[M]
R1010	D0GB183JA007	18K 1/16W	[M]
R1011	ERJ3GEYJ822V	8.2K 1/16W	[M]
R1012	D0GB472JA007	4.7K 1/16W	[M]
R1013	D0GB472JA007	4.7K 1/16W	[M]
R1014	D0GB472JA007	4.7K 1/16W	[M]
R1015	D0GB470JA008	47 1/16W	[M]
R1016	D0GB470JA008	47 1/16W	[M]
R1017	ERJ3GEYJ822V	8.2K 1/16W	[M]
R1018	D0GB392JA007	3.9K 1/16W	[M]
R1019	D0GB392JA007	3.9K 1/16W	[M]
R1020	ERJ3GEY0R00V	0 1/16W	[M]
R1022	ERJ3GEYJ103V	10K 1/16W	[M]
R1024	ERJ3GEY0R00V	0 1/16W	[M]
R1025	ERJ3GEY0R00V	0 1/16W	[M]
R1026	ERJ3GEYJ102V	1K 1/16W	[M]
R1027	ERJ3GEY0R00V	0 1/16W	[M]
R1028	ERJ3GEYJ822V	8.2K 1/16W	[M]
R1029	D0GB475JA007	4.7M 1/16W	[M]
R1030	D0GB101JA007	100 1/16W	[M]
R1031	D0GB273JA007	27K 1/16W	[M]
R1032	ERJ3GEYJ103V	10K 1/16W	[M]
R1035	ERJ3GEYJ103V	10K 1/16W	[M]
R1040	ERJ3GEY0R00V	0 1/16W	[M]
R1049	ERJ3GEY0R00V	0 1/16W	[M]
R1050	ERJ3GEY0R00V	0 1/16W	[M]
R1055	D0GB222JA007	2.2K 1/16W	[M]
R1057	D0GB222JA007	2.2K 1/16W	[M]
R1060	D0GB391JA041	390 1/16W	[M]
R1084	D0GB222JA007	2.2K 1/16W	[M]

Ref. No.	Part No.	Part Name & Description	Remarks
R1085	D0GB473JA007	47K 1/16W	[M]
R1086	D0GB222JA007	2.2K 1/16W	[M]
R1087	D0GB473JA007	47K 1/16W	[M]
R1090	D0GB221JA041	220 1/16W	[M]
R1091	ERJ3GEY0R00V	0 1/16W	[M]
R1092	ERJ3GEY0R00V	0 1/16W	[M]
R1097	ERJ3GEYJ103V	10K 1/16W	[M]
R1098	ERJ3GEYJ103V	10K 1/16W	[M]
R1099	ERJ3GEY0R00V	0 1/16W	[M]
R1100	ERJ3GEY0R00V	0 1/16W	[M]
R1101	ERJ3GEY0R00V	0 1/16W	[M]
R1102	ERJ3GEYJ103V	10K 1/16W	[M]
R2001	ERJ3GEY0R00V	0 1/16W	[M]
R2002	ERJ3GEY0R00V	0 1/16W	[M]
R2003	ERJ3GEY0R00V	0 1/16W	[M]
R2004	ERJ3GEY0R00V	0 1/16W	[M]
R2005	ERJ3GEY0R00V	0 1/16W	[M]
R2007	ERJ3GEY0R00V	0 1/16W	[M]
R2008	ERJ3GEY0R00V	0 1/16W	[M]
R2009	ERJ3GEY0R00V	0 1/16W	[M]
R2021	ERJ3GEY0R00V	0 1/16W	[M]
R2032	ERG1SJ820E	82 1W	[M]
R2051	ERJ3GEYJ102V	1K 1/16W	[M]
R2052	ERJ3GEYJ103V	10K 1/16W	[M]
R2053	D0GB563JA007	56K 1/16W	[M]
R2054	D0GB273JA007	27K 1/16W	[M]
R2055	D0GB152JA007	1.5K 1/16W	[M]
R2056	D0GB152JA007	1.5K 1/16W	[M]
R2057	ERJ3GEYJ682V	6.8K 1/16W	[M]
R2058	ERJ3GEYJ682V	6.8K 1/16W	[M]
R2064	D0GB153JA007	15K 1/16W	[M]
R2067	D0GB332JA007	3.3K 1/16W	[M]
R2068	D0GB183JA007	18K 1/16W	[M]
R2069	ERJ3GEY0R00V	0 1/16W	[M]
R2070	ERJ3GEYJ821V	820 1/16W	[M]
R2071	ERJ3GEYJ392V	3.9K 1/16W	[M]
R2072	ERJ3GEYJ102V	1K 1/16W	[M]
R2073	D0GB104JA007	100K 1/16W	[M]
R2074	D0GB473JA007	47K 1/16W	[M]
R2075	D0GB473JA007	47K 1/16W	[M]
R2076	D0GB222JA007	2.2K 1/16W	[M]
R2077	ERJ3GEYJ152V	1.5K 1/16W	[M]
R2078	ERJ3GEY0R00V	0 1/16W	[M]
R2081	ERJ3GEYJ102V	1K 1/16W	[M]
R2086	ERJ3GEYJ392V	3.9K 1/16W	[M]
R2087	ERJ3GEYJ334V	330K 1/16W	[M]
R2101	ERJ3GEYJ332V	3.3K 1/16W	[M]
R2102	ERJ3GEYJ122V	1.2K 1/16W	[M]
R2103	D0GB123JA007	12K 1/16W	[M]
R2104	ERJ3GEYJ562V	5.6K 1/16W	[M]
R2105	ERJ3GEYJ682V	6.8K 1/16W	[M]
R2106	D0GB101JA007	100 1/16W	[M]
R2107	ERJ3GEYJ222V	2.2K 1/16W	[M]
R2108	D0GB123JA007	12K 1/16W	[M]
R2109	ERJ3GEY0R00V	0 1/16W	[M]
R2111	ERJ3GEYJ153V	15K 1/16W	[M]
R2112	ERJ3GEYJ562V	5.6K 1/16W	[M]
R2113	ERJ3GEYJ472V	4.7K 1/16W	[M]
R2116	ERJ3GEYJ682V	6.8K 1/16W	[M]
R2117	ERJ3GEYJ122V	1.2K 1/16W	[M]
R2118	ERJ3GEYJ472V	4.7K 1/16W	[M]
R2120	ERJ3GEYJ102V	1K 1/16W	[M]
R2141	D0GB272JA007	2.7K 1/16W	[M]
R2142	D0GB152JA007	1.5K 1/16W	[M]
R2143	D0GB104JA007	100K 1/16W	[M]
R2145	ERJ3GEYJ103V	10K 1/16W	[M]
R2146	ERJ3GEYJ562V	5.6K 1/16W	[M]
R2149	D0GB222JA007	2.2K 1/16W	[M]
R2152	ERJ3GEYJ681V	680 1/16W	[M]
R2153	D0GB152JA007	1.5K 1/16W	[M]
R2154	D0GB104JA007	100K 1/16W	[M]
R2166	ERJ3GEYJ100V	10 1/16W	[M]
R2167	ERJ3GEYJ100V	10 1/16W	[M]
R2168	ERJ3GEYJ100V	10 1/16W	[M]

Ref. No.	Part No.	Part Name & Description	Remarks
R2169	ERJ3GEYJ100V	10 1/16W	[M]
R2170	ERJ3GEY0R00V	0 1/16W	[M]
R2171	D0GB332JA007	3.3K 1/16W	[M]
R2172	D0GB561JA007	560 1/16W	[M]
R2191	D0GB222JA007	2.2K 1/16W	[M]
R2192	ERJ3GEY0R00V	0 1/16W	[M]
R2197	ERJ3GEYJ822V	8.2K 1/16W	[M]
R2198	D0GB123JA007	12K 1/16W	[M]
R2199	ERJ3GEYJ103V	1K 1/16W	[M]
R2201	ERJ3GEYJ332V	3.3K 1/16W	[M]
R2202	ERJ3GEYJ122V	1.2K 1/16W	[M]
R2204	ERJ3GEYJ562V	5.6K 1/16W	[M]
R2205	ERJ3GEYJ682V	6.8K 1/16W	[M]
R2206	D0GB101JA007	100 1/16W	[M]
R2207	ERJ3GEYJ222V	2.2K 1/16W	[M]
R2209	ERJ3GEY0R00V	0 1/16W	[M]
R2211	ERJ3GEYJ153V	15K 1/16W	[M]
R2212	ERJ3GEYJ562V	5.6K 1/16W	[M]
R2216	ERJ3GEYJ682V	6.8K 1/16W	[M]
R2217	ERJ3GEYJ122V	1.2K 1/16W	[M]
R2220	ERJ3GEYJ102V	1K 1/16W	[M]
R2241	D0GB272JA007	2.7K 1/16W	[M]
R2242	D0GB152JA007	1.5K 1/16W	[M]
R2243	D0GB104JA007	100K 1/16W	[M]
R2245	ERJ3GEYJ103V	10K 1/16W	[M]
R2246	ERJ3GEYJ562V	5.6K 1/16W	[M]
R2247	D0GB104JA007	100K 1/16W	[M]
R2248	ERJ3GEYJ682V	6.8K 1/16W	[M]
R2249	D0GB222JA007	2.2K 1/16W	[M]
R2252	ERJ3GEYJ681V	680 1/16W	[M]
R2253	D0GB152JA007	1.5K 1/16W	[M]
R2254	D0GB104JA007	100K 1/16W	[M]
R2266	ERJ3GEYJ100V	10 1/16W	[M]
R2267	ERJ3GEYJ100V	10 1/16W	[M]
R2268	ERJ3GEYJ100V	10 1/16W	[M]
R2269	ERJ3GEYJ100V	10 1/16W	[M]
R2270	ERJ3GEY0R00V	0 1/16W	[M]
R2271	D0GB332JA007	3.3K 1/16W	[M]
R2272	D0GB561JA007	560 1/16W	[M]
R2291	D0GB222JA007	2.2K 1/16W	[M]
R2292	ERJ3GEY0R00V	0 1/16W	[M]
R2297	ERJ3GEYJ822V	8.2K 1/16W	[M]
R2298	D0GB123JA007	12K 1/16W	[M]
R2299	D0GB153JA007	15K 1/16W	[M]
R2302	ERJ3GEYJ332V	3.3K 1/16W	[M]
R2303	D0GB104JA007	100K 1/16W	[M]
R2312	ERJ3GEYJ683V	68K 1/16W	[M]
R2313	D0GB683JA007	68K 1/16W	[M]
R2314	ERJ3GEYJ103V	10K 1/16W	[M]
R2315	ERJ3GEYJ222V	2.2K 1/16W	[M]
R2316	D0GB272JA007	2.7K 1/16W	[M]
R2317	ERJ3GEYJ473V	47K 1/16W	[M]
R2318	D0GB272JA007	2.7K 1/16W	[M]
R2319	D0GB562JA007	5.6K 1/16W	[M]
R2320	ERJ3GEYJ102V	1K 1/16W	[M]
R2331	ERJ3GEY0R00V	0 1/16W	[M]
R2332	D0GB393JA007	39K 1/16W	[M]
R2333	ERJ3GEY0R00V	0 1/16W	[M]
R2334	ERJ3GEYJ101V	100 1/16W	[M]
R2335	ERJ3GEYJ102V	1K 1/16W	[M]
R2336	ERJ3GEYJ333V	33K 1/16W	[M]
R2337	D0GB474JA041	470K 1/16W	[M]
R2338	ERJ3GEYJ102V	1K 1/16W	[M]
R2339	ERJ3GEYJ102V	1K 1/16W	[M]
R2402	ERJ3GEYJ332V	3.3K 1/16W	[M]
R2403	D0GB104JA007	100K 1/16W	[M]
R2412	ERJ3GEYJ683V	68K 1/16W	[M]
R2413	D0GB683JA007	68K 1/16W	[M]
R2414	ERJ3GEYJ103V	10K 1/16W	[M]
R2415	D0GB184JA007	180K 1/16W	[M]
R2416	D0GB272JA007	2.7K 1/16W	[M]
R2417	ERJ3GEYJ473V	47K 1/16W	[M]
R2418	D0GB272JA007	2.7K 1/16W	[M]
R2419	D0GB562JA007	5.6K 1/16W	[M]

Ref. No.	Part No.	Part Name & Description	Remarks
R2420	ERJ3GEYJ102V	1K 1/16W	[M]
R2422	ERJ3GEY0R00V	0 1/16W	[M]
R2439	ERJ3GEYJ102V	1K 1/16W	[M]
R2501	D0GB222JA007	2.2K 1/16W	[M]
R2502	D0GB563JA007	56K 1/16W	[M]
R2503	D0GB273JA007	27K 1/16W	[M]
R2532	ERJ3GEY0R00V	0 1/16W	[M]
R2551	D0GB1R0JA007	1 1/16W	[M]
R2552	D0GB1R0JA007	1 1/16W	[M]
R2553	D0GB1R0JA007	1 1/16W	[M]
R2554	D0GB1R0JA007	1 1/16W	[M]
R2555	D0GB1R0JA007	1 1/16W	[M]
R2556	ERJ3GEYJ102V	1K 1/16W	[M]
R2557	ERJ3GEYJ102V	1K 1/16W	[M]
R2558	D0GB331JA007	330 1/16W	[M]
R2559	D0GB392JA007	3.9K 1/16W	[M]
R2560	ERJ3GEYJ103V	10K 1/16W	[M]
R2562	D0GB221JA041	220 1/16W	[M]
R2563	D0GB392JA007	3.9K 1/16W	[M]
R2568	ERJ3GEYJ102V	1K 1/16W	[M]
R2576	D0GB472JA007	4.7K 1/16W	[M]
R2577	D0GB393JA007	39K 1/16W	[M]
R2578	D0GB153JA007	15K 1/16W	[M]
R2579	D0GB473JA007	47K 1/16W	[M]
R2582	ERJ3GEY0R00V	0 1/16W	[M]
R2584	D0GB334JA007	330K 1/16W	[M]
R2585	D0GB334JA007	330K 1/16W	[M]
R2586	ERJ3GEYJ122V	1.2K 1/16W	[M]
R2587	ERJ3GEYJ122V	1.2K 1/16W	[M]
R2591	D0GB334JA007	330K 1/16W	[M]
R2592	ERJ3GEY0R00V	0 1/16W	[M]
R2730	ERJ3GEYJ393V	39K 1/16W	[M]
R2731	ERJ3GEYJ393V	39K 1/16W	[M]
R2732	ERJ3GEY0R00V	0 1/16W	[M]
R2733	ERJ3GEY0R00V	0 1/16W	[M]
R2801	ERJ3GEYJ103V	10K 1/16W	[M]
R2802	D0GB101JA007	100 1/16W	[M]
R2803	ERJ3GEYJ103V	10K 1/16W	[M]
R2804	D0GB473JA007	47K 1/16W	[M]
R2805	D0GB473JA007	47K 1/16W	[M]
R2806	ERJ3GEYJ103V	10K 1/16W	[M]
R2807	ERJ3GEYJ103V	10K 1/16W	[M]
R2808	ERJ3GEYJ221V	220 1/16W	[M]
R2809	ERJ3GEYJ221V	220 1/16W	[M]
R2810	D0GB223JA007	22K 1/16W	[M]
R2811	ERJ3GEY0R00V	0 1/16W	[M]
R2812	ERJ3GEYJ101V	100 1/16W	[M]
R2813	ERJ3GEYJ101V	100 1/16W	[M]
R2817	D0GB104JA007	100K 1/16W	[M]
R2818	D0GB104JA007	100K 1/16W	[M]
R2819	D0GB104JA007	100K 1/16W	[M]
R2823	ERJ3GEYJ101V	100 1/16W	[M]
R2824	ERJ3GEYJ101V	100 1/16W	[M]
R2825	ERJ3GEYJ101V	100 1/16W	[M]
R2828	ERJ3GEYJ103V	10K 1/16W	[M]
R2834	ERJ3GEYJ102V	1K 1/16W	[M]
R2835	D0GB101JA007	100 1/16W	[M]
R2836	D0GB101JA007	100 1/16W	[M]
R2837	D0GB101JA007	100 1/16W	[M]
R2838	D0GB101JA007	100 1/16W	[M]
R2839	D0GB101JA007	100 1/16W	[M]
R2840	ERJ3GEY0R00V	0 1/16W	[M]
R2841	ERJ3GEYJ103V	10K 1/16W	[M]
R2842	ERJ3GEYJ103V	10K 1/16W	[M]
R2844	ERJ3GEYJ103V	10K 1/16W	[M]
R2845	ERJ3GEYJ103V	10K 1/16W	[M]
R2846	D0GB472JA007	4.7K 1/16W	[M]
R2849	D0GB101JA007	100 1/16W	[M]
R2850	D0GB101JA007	100 1/16W	[M]
R2851	D0GB101JA007	100 1/16W	[M]
R2852	D0GB101JA007	100 1/16W	[M]
R2854	D0GB473JA007	47K 1/16W	[M]
R2856	ERJ3GEYJ102V	1K 1/16W	[M]
R2858	D0GB101JA007	100 1/16W	[M]

Ref. No.	Part No.	Part Name & Description	Remarks
R2859	D0GB101JA007	100 1/16W	[M]
R2860	D0GB101JA007	100 1/16W	[M]
R2861	D0GB101JA007	100 1/16W	[M]
R2862	D0GB101JA007	100 1/16W	[M]
R2863	D0GB101JA007	100 1/16W	[M]
R2869	D0GB473JA007	47K 1/16W	[M]
R2870	D0GB473JA007	47K 1/16W	[M]
R2871	D0GB473JA007	47K 1/16W	[M]
R2872	D0GB473JA007	47K 1/16W	[M]
R2873	D0GB473JA007	47K 1/16W	[M]
R2874	ERJ3GEYJ103V	10K 1/16W	[M]
R2875	ERJ3GEYJ103V	10K 1/16W	[M]
R2876	D0GB223JA007	22K 1/16W	[M]
R2877	D0GB223JA007	22K 1/16W	[M]
R2878	D0GB472JA007	4.7K 1/16W	[M]
R2881	D0GB221JA041	220 1/16W	[M]
R2882	D0GB106JA007	10M 1/16W	[M]
R2883	D0GB334JA007	330K 1/16W	[M]
R2884	D0GB473JA007	47K 1/16W	[M]
R2886	D0GB105JA007	1M 1/16W	[M]
R2887	ERJ3GEYJ102V	1K 1/16W	[M]
R2888	ERJ3GEYJ102V	1K 1/16W	[M]
R2889	ERJ3GEYJ102V	1K 1/16W	[M]
R2890	ERJ3GEY0R00V	0 1/16W	[M]
R2891	D0GB473JA007	47K 1/16W	[M]
R2892	ERJ3GEY0R00V	0 1/16W	[M]
R2894	ERJ3GEYJ102V	1K 1/16W	[M]
R2895	D0GB101JA007	100 1/16W	[M]
R2901	D0HB750ZA003	75 3W	[M]
R2902	D0HB750ZA003	75 3W	[M]
R2903	D0HB750ZA003	75 3W	[M]
R2906	D0GB104JA007	100K 1/16W	[M]
R2907	D0GB104JA007	100K 1/16W	[M]
R2908	D0GB104JA007	100K 1/16W	[M]
R2909	D0HB750ZA003	75 3W	[M]
R2910	D0HB750ZA003	75 3W	[M]
R2911	ERJ3GEY0R00V	0 1/16W	[M]
R2912	D0GB222JA007	2.2K 1/16W	[M]
R2913	ERJ3GEYJ103V	10K 1/16W	[M]
R2914	ERJ3GEYJ103V	10K 1/16W	[M]
R2915	D0HB750ZA003	75 3W	[M]
R2920	D0GB104JA007	100K 1/16W	[M]
R2921	D0GB104JA007	100K 1/16W	[M]
R2922	D0GB104JA007	100K 1/16W	[M]
R2931	ERJ3GEY0R00V	0 1/16W	[M]
R2932	ERJ3GEY0R00V	0 1/16W	[M]
R2934	ERJ3GEY0R00V	0 1/16W	[M]
R2935	ERJ3GEY0R00V	0 1/16W	[M]
R2936	ERJ3GEY0R00V	0 1/16W	[M]
R2937	ERJ3GEY0R00V	0 1/16W	[M]
R2938	ERJ3GEY0R00V	0 1/16W	[M]
R2940	ERJ3GEY0R00V	0 1/16W	[M]
R2941	ERJ3GEYJ103V	10K 1/16W	[M]
R2942	ERJ3GEY0R00V	0 1/16W	[M]
R2943	ERJ3GEY0R00V	0 1/16W	[M]
R2944	D0GB472JA007	4.7K 1/16W	[M]
R2945	ERJ3GEYJ103V	10K 1/16W	[M]
R2946	D0GB563JA007	56K 1/16W	[M]
R2947	D0AF270JA039	27 1/4W	[M]
R2948	D0GB101JA007	100 1/16W	[M]
R2949	ERJ3GEYJ473V	47K 1/16W	[M]
R2950	ERJ3GEYJ102V	1K 1/16W	[M]
R2951	D0GB473JA041	47K 1/16W	[M]
R2952	ERJ3GEYJ473V	47K 1/16W	[M]
R2953	ERJ3GEYJ824V	820K 1/16W	[M]
R2954	ERJ3GEYJ103V	10K 1/16W	[M]
R2955	D0GB562JA007	5.6K 1/16W	[M]
R2956	ERJ3GEYJ103V	10K 1/16W	[M]
R2970	ERJ3GEYJ103V	10K 1/16W	[M]
R2971	ERJ3GEYJ750V	75 1/16W	[M]
R2972	D0GB221JA041	220 1/16W	[M]
R2973	ERJ3GEYJ122V	1.2K 1/16W	[M]
R2974	ERJ3GEYJ102V	1K 1/16W	[M]
R2975	ERJ3GEYJ102V	1K 1/16W	[M]

Ref. No.	Part No.	Part Name & Description	Remarks
R2976	ERJ3GEY0R00V	0 1/16W	[M]
R2977	ERJ3GEY0R00V	0 1/16W	[M]
R2978	D0GB182JA007	1.8K 1/16W	[M]
R2979	ERJ3GEYJ101V	100 1/16W	[M]
R2987	ERJ3GEY0R00V	0 1/16W	[M]
R2991	ERJ3GEY0R00V	0 1/16W	[M]
R5101	ERJ3GEYJ103V	10K 1/16W	[M]
R5103	ERG1SJ103E	10K 1W	[M]
R5105	ERJ3GEYJ103V	10K 1/16W	[M]
R5106	D0GB223JA007	22K 1/16W	[M]
R5107	D0GB561JA007	560 1/16W	[M]
R5108	D0GB470JA008	47 1/16W	[M]
R5109	ERJ3GEYJ102V	1K 1/16W	[M]
R5110	D0GB222JA007	2.2K 1/16W	[M]
R5111	D0GB104JA007	100K 1/16W	[M]
R5112	D0GB473JA007	47K 1/16W	[M]
R5113	D0GB473JA007	47K 1/16W	[M]
R5114	ERJ3GEYJ2R7V	2.7 1/16W	[M]
R5122	D0AF4R7JA039	4.7 1/4W	[M]
R5123	D0AF4R7JA039	4.7 1/4W	[M]
R5126	ERJ3GEYJ102V	1K 1/16W	[M]
R5127	D0GB471JA007	470 1/16W	[M]
R5130	D0GB151JA007	150 1/16W	[M]
R5131	D0AF222JA105	2.2K 1/4W	[M]
R5132	D0AF331JA039	330 1/4W	[M]
R5133	ERJ3GEYJ103V	10K 1/16W	[M]
R5134	ERJ3GEYJ122V	1.2K 1/16W	[M]
R5135	D0AE2R2JA048	2.2 1/4W	[M]
R5136	D0AE2R2JA048	2.2 1/4W	[M]
R5137	D0AE2R2JA048	2.2 1/4W	[M]
R5138	ERJ8GEYJ100V	10 1/8W	[M]
R5139	ERJ8GEYJ100V	10 1/8W	[M]
R5142	ERJ8GEYJ100V	10 1/8W	[M]
R5143	ERJ8GEYJ100V	10 1/8W	[M]
R5144	D0AF120JA039	12 1/4W	[M]
R5146	D0GB392JA007	3.9K 1/16W	[M]
R5147	D0AF2R2JA039	2.2 1/4W	[M]
R5148	D0GB562JA007	5.6K 1/16W	[M]
R5149	ERJ3GEYJ102V	1K 1/16W	[M]
R5150	D0GB224JA007	220K 1/16W	[M]
R5152	ERJ3GEY0R00V	0 1/16W	[M]
R5153	D0GB101JA007	100 1/16W	[M]
R5154	D0GB101JA007	100 1/16W	[M]
R5155	D0GB101JA007	100 1/16W	[M]
R5156	D0GB101JA007	100 1/16W	[M]
R5157	D0GB104JA007	100K 1/16W	[M]
R5201	ERJ3GEYJ102V	1K 1/16W	[M]
R5202	D0GB104JA007	100K 1/16W	[M]
R5203	ERJ3GEYJ103V	10K 1/16W	[M]
R5204	D0GB104JA007	100K 1/16W	[M]
R5205	D0GB104JA007	100K 1/16W	[M]
R5206	D0GB105JA007	1M 1/16W	[M]
R5207	ERJ3GEYJ682V	6.8K 1/16W	[M]
R5208	D0GB220JA007	22 1/16W	[M]
R5209	D0GB100JA007	10 1/16W	[M]
R5210	ERJ3GEY0R00V	0 1/16W	[M]
R5301	D0GB562JA007	5.6K 1/16W	[M]
R5302	D0GB562JA007	5.6K 1/16W	[M]
R5303	D0GB562JA007	5.6K 1/16W	[M]
R5304	D0GB562JA007	5.6K 1/16W	[M]
R5305	ERG1SJ220E	22 1W	[M]
R5306	ERG1SJ220E	22 1W	[M]
R5307	ERJ8GEYJ100V	10 1/8W	[M]
R5308	ERJ8GEYJ100V	10 1/8W	[M]
R5313	D0GB154JA007	150K 1/16W	[M]
R5317	ERJ3GEYJ103V	10K 1/16W	[M]
R5318	ERDS1FVJ562T	5.6K 1/2W	[M]
R5326	ERJ3GEY0R00V	0 1/16W	[M]
R5329	ERJ3GEY0R00V	0 1/16W	[M]
R5413	D0GB104JA007	100K 1/16W	[M]
R5418	ERDS1FVJ562T	5.6K 1/2W	[M]
R5501	D0GB562JA007	5.6K 1/16W	[M]
R5502	D0GB562JA007	5.6K 1/16W	[M]
R5506	ERG1SJ220E	22 1W	[M]

Ref. No.	Part No.	Part Name & Description	Remarks
R5507	ERJ8GEYJ100V	10 1/8W	[M]
R5513	D0GB334JA007	330K 1/16W	[M]
R5514	ERJ3GEY0R00V	0 1/16W	[M]
R5519	ERJ3GEY0R00V	0 1/16W	[M]
R5520	ERJ3GEY0R00V	0 1/16W	[M]
R5525	ERDS1FVJ562T	5.6K 1/2W	[M]
R5526	D0GB472JA007	4.7K 1/16W	[M]
R5529	ERJ3GEY0R00V	0 1/16W	[M]
R5715	D0GB332JA007	3.3K 1/16W	[M]
R5716	D0AF270JA039	27 1/4W	[M]
R5717	D0GB101JA007	100 1/16W	[M]
R5718	D0GB272JA007	2.7K 1/16W	[M]
R5719	D0GB471JA007	470 1/16W	[M]
R5720	D0GB272JA007	2.7K 1/16W	[M]
R5721	D0GB332JA007	3.3K 1/16W	[M]
R5722	D0AF101JA105	100 1/4W	[M]
R5723	D0AF101JA105	100 1/4W	[M]
R5951	D0AE332JA048	3.3K 1/4W	[M]
R5952	D0AE152JA048	1.5K 1/4W	[M]GS/GCS/GCT
R5953	D0AE151JA048	150 1/4W	[M]GC
R5954	D0AE824JA048	820K 1/4W	[M]GS/GCS/GCT
R5955	D0AE122JA048	1.2K 1/4W	[M]GS/GCS/GCT
R5955	D0AE222JA048	2.2K 1/4W	[M]GC
R5957	D0AE103JA048	10K 1/4W	[M]
R5958	D0AE103JA048	10K 1/4W	[M]
R5960	D0AE472JA048	4.7K 1/4W	[M]
R5961	D0AE151JA048	150 1/4W	[M]
R5963	D0AF820JA039	82 1/4W	[M]
R6102	ERJ3GEYJ102V	1K 1/16W	[M]
R6103	ERJ3GEYJ102V	1K 1/16W	[M]
R6104	ERJ3GEYJ122V	1.2K 1/16W	[M]
R6105	D0GB182JA007	1.8K 1/16W	[M]
R6106	D0GB222JA041	2.2K 1/16W	[M]
R6107	D0GB272JA007	2.7K 1/16W	[M]
R6199	ERJ3GEYJ103V	10K 1/16W	[M]
R6202	ERJ3GEYJ102V	1K 1/16W	[M]
R6203	ERJ3GEYJ102V	1K 1/16W	[M]
R6204	ERJ3GEYJ122V	1.2K 1/16W	[M]
R6205	D0GB182JA007	1.8K 1/16W	[M]
R6206	D0GB222JA041	2.2K 1/16W	[M]
R6207	D0GB272JA007	2.7K 1/16W	[M]
R6208	D0GB472JA041	4.7K 1/16W	[M]
R6209	ERJ3GEYJ682V	6.8K 1/16W	[M]
R6210	ERJ3GEYJ103V	10K 1/16W	[M]
R6211	D0GB223JA041	22K 1/16W	[M]
R6301	ERJ3GEYJ103V	10K 1/16W	[M]
R6303	ERJ3GEYJ102V	1K 1/16W	[M]
R6304	ERJ3GEYJ102V	1K 1/16W	[M]
R6305	ERJ3GEYJ122V	1.2K 1/16W	[M]
R6306	D0GB182JA007	1.8K 1/16W	[M]
R6307	D0GB222JA041	2.2K 1/16W	[M]
R6308	D0GB272JA007	2.7K 1/16W	[M]
R6309	D0GB472JA041	4.7K 1/16W	[M]
R6310	ERJ3GEYJ682V	6.8K 1/16W	[M]
R6311	ERJ3GEYJ103V	10K 1/16W	[M]
R6312	D0GB223JA041	22K 1/16W	[M]
R6313	D0GB683JA007	68K 1/16W	[M]
R6401	ERJ3GEYJ103V	10K 1/16W	[M]
R6402	ERJ3GEYJ103V	10K 1/16W	[M]
R6403	ERJ3GEYJ2R7V	2.7 1/16W	[M]
R6404	ERJ3GEYJ2R7V	2.7 1/16W	[M]
R6405	D0GB274JA007	270K 1/16W	[M]
R6406	D0GB274JA007	270K 1/16W	[M]
R6411	D0GB223JA041	22K 1/16W	[M]
R6412	ERJ3GEYJ102V	1K 1/16W	[M]
R6415	D0GB223JA041	22K 1/16W	[M]
R6416	ERJ3GEYJ102V	1K 1/16W	[M]
R6421	ERJ3GEYJ103V	10K 1/16W	[M]
R6425	ERJ3GEYJ103V	10K 1/16W	[M]
R6458	ERJ3GEYJ392V	3.9K 1/16W	[M]
R6481	D0GB270JA007	27 1/16W	[M]

Ref. No.	Part No.	Part Name & Description	Remarks
R6491	D0GB473JA041	47K 1/16W	[M]
R6492	D0GB473JA041	47K 1/16W	[M]
R6493	ERJ3GEYJ103V	10K 1/16W	[M]
R6601	D0GB471JA041	470 1/16W	[M]
R6603	D0GB221JA041	220 1/16W	[M]
R6604	D0GB221JA041	220 1/16W	[M]
R6605	D0GB823JA007	82K 1/16W	[M]
R6631	ERD2FCVG470T	47 1/4W	[M]
R6632	ERD2FCVG470T	47 1/4W	[M]
R6702	ERJ3GEYJ102V	1K 1/16W	[M]
R6703	ERJ3GEYJ272V	2.7K 1/16W	[M]
R6710	ERJ3GEYJ102V	1K 1/16W	[M]
R6712	ERJ3GEYJ272V	2.7K 1/16W	[M]
R6713	ERJ3GEYJ102V	1K 1/16W	[M]
R6714	ERJ3GEYJ102V	1K 1/16W	[M]
R6900	ERJ3GEY0R00V	0 1/16W	[M]
R6901	ERJ3GEYJ681V	680 1/16W	[M]
R6902	ERJ3GEYJ681V	680 1/16W	[M]
R6903	D0GB561JA007	560 1/16W	[M]
R6904	D0GB222JA041	2.2K 1/16W	[M]
R6904	ERJ3GEY0R00V	0 1/16W	[M]
R6905	D0GB474JA041	470K 1/16W	[M]
R6905	ERJ3GEY0R00V	0 1/16W	[M]
R6906	ERJ3GEYJ822V	8.2K 1/16W	[M]
R6907	D0GB334JA007	330K 1/16W	[M]
R6908	D0GB680JA007	68 1/16W	[M]
R6909	D0GB334JA007	330K 1/16W	[M]
R6910	D0GB472JA041	4.7K 1/16W	[M]
R6911	D0GB101JA007	100 1/16W	[M]
R6912	D0GB273JA007	27K 1/16W	[M]
R6913	D0GB331JA007	330 1/16W	[M]
R6914	ERJ3GEY0R00V	0 1/16W	[M]
R6915	D0GB472JA041	4.7K 1/16W	[M]
R6916	D0GB472JA041	4.7K 1/16W	[M]
R6917	D0GB272JA007	2.7K 1/16W	[M]
R6918	D0GB472JA041	4.7K 1/16W	[M]
R6919	ERJ3GEYJ102V	1K 1/16W	[M]
R6920	D0GB472JA041	4.7K 1/16W	[M]
R6921	D0GB390JA041	39 1/16W	[M]
R6922	D0GB390JA041	39 1/16W	[M]
R6923	D0GB123JA007	12K 1/16W	[M]
R6924	D0GB153JA007	15K 1/16W	[M]
R6925	D0GB153JA007	15K 1/16W	[M]
R6926	D0GB153JA007	15K 1/16W	[M]
R6927	D0GB472JA041	4.7K 1/16W	[M]
R6928	D0GB472JA041	4.7K 1/16W	[M]
R6929	ERJ3GEYJ822V	8.2K 1/16W	[M]
R6930	D0GB273JA007	27K 1/16W	[M]
R6931	D0GB181JA007	180 1/16W	[M]
R6933	D0GB151JA007	150 1/16W	[M]
R6934	ERJ3GEYJ470V	47 1/16W	[M]
R6935	ERJ3GEY0R00V	0 1/16W	[M]
R6937	ERJ3GEYJ102V	1K 1/16W	[M]
R6938	ERJ3GEYJ102V	1K 1/16W	[M]
R6940	D0GB183JA007	18K 1/16W	[M]
R6941	D0GB153JA007	15K 1/16W	[M]
R6942	D0GB153JA007	15K 1/16W	[M]
R6943	D0GB153JA007	15K 1/16W	[M]
R6944	ERJ3GEYJ103V	10K 1/16W	[M]
R6945	D0GB562JA007	5.6K 1/16W	[M]
R6946	D0GB390JA041	39 1/16W	[M]
R6947	ERJ3GEYJ472V	4.7K 1/16W	[M]
R6948	ERJ3GEYJ103V	10K 1/16W	[M]
R6949	ERJ3GEYJ103V	10K 1/16W	[M]
R6950	ERJ3GEYJ102V	1K 1/16W	[M]
R6951	D0GB562JA007	5.6K 1/16W	[M]
R6952	D0GB562JA007	5.6K 1/16W	[M]
R6954	D0GB473JA041	47K 1/16W	[M]
R6956	D0GB472JA041	4.7K 1/16W	[M]
R6957	D0GB474JA041	470K 1/16W	[M]
R6959	ERJ3GEY0R00V	0 1/16W	[M]
R6960	ERJ3GEY0R00V	0 1/16W	[M]
R6961	ERJ3GEYJ103V	10K 1/16W	[M]GCS/GCT

Ref. No.	Part No.	Part Name & Description	Remarks
R6962	ERJ3GEYJ472V	4.7K 1/16W	[M]GCS/GCT
R6963	ERJ3GEYJ272V	2.7K 1/16W	[M]GCS/GCT
R6964	ERJ3GEYJ472V	4.7K 1/16W	[M]GCS/GCT
R8011	ERJ2GEJ220X	22 1/32W	[M]
R8012	ERJ2GEJ220X	22 1/32W	[M]
R8013	ERJ2GEJ220X	22 1/32W	[M]
R8041	ERJ2GEJ330X	33 1/32W	[M]
R8153	ERJ2RHD621X	620 1/32W	[M]
R8154	ERJ2RHD102X	1K 1/32W	[M]
R8211	ERJ2GEJ103X	10K 1/32W	[M]
R8221	ERJ2GEJ822X	8.2K 1/32W	[M]
R8225	ERJ2GEJ822X	8.2K 1/32W	[M]
R8230	ERJ2GEJ222X	2.2K 1/32W	[M]
R8231	ERJ2GEJ223X	22K 1/32W	[M]
R8232	ERJ2GEJ752X	7.5K 1/32W	[M]
R8251	ERJ6GEYJ6R8V	6.8 1/10W	[M]
R8261	ERJ2GEJ823X	82K 1/32W	[M]
R8262	ERJ2GEJ153X	15K 1/32W	[M]
R8263	ERJ2GEJ823X	82K 1/32W	[M]
R8264	ERJ2GEJ153X	15K 1/32W	[M]
R8311	ERJ2RHD242X	2.4K 1/32W	[M]
R8312	ERJ2RHD102X	1K 1/32W	[M]
R8313	ERJ2RHD123X	12K 1/32W	[M]
R8314	ERJ2RHD183X	18K 1/32W	[M]
R8321	ERJ3RBD201V	200 3W	[M]
R8322	ERJ3GEY0R00V	0 1/16W	[M]
R8323	ERJ2GEJ330X	33 1/32W	[M]
R8324	ERJ2GEJ102X	1K 1/32W	[M]
R8325	ERJ3RBD201V	200 3W	[M]
R8326	ERJ3GEY0R00V	0 1/16W	[M]
R8327	ERJ2GEJ330X	33 1/32W	[M]
R8328	ERJ2GEJ102X	1K 1/32W	[M]
R8331	ERJ3RBD201V	200 3W	[M]
R8332	ERJ3GEY0R00V	0 1/16W	[M]
R8333	ERJ2GEJ330X	33 1/32W	[M]
R8334	ERJ2GEJ102X	1K 1/32W	[M]
R8335	ERJ3RBD201V	200 3W	[M]
R8336	ERJ2GEJ330X	33 1/32W	[M]
R8337	ERJ2GEJ102X	1K 1/32W	[M]
R8341	ERJ3RBD201V	200 3W	[M]
R8342	ERJ2GEJ330X	33 1/32W	[M]
R8343	ERJ2GEJ102X	1K 1/32W	[M]
R8401	ERJ2GEJ101X	100 1/32W	[M]
R8420	ERJ2GEJ222X	2.2K 1/32W	[M]
R8421	ERJ2GE0R00X	0 1/32W	[M]
R8430	ERJ3GEYJ102V	1K 1/16W	[M]
R8531	ERJ2GEJ152X	1.5K 1/32W	[M]
R8532	ERJ2GEJ222X	2.2K 1/32W	[M]
R8533	ERJ2GE0R00X	0 1/32W	[M]
R8541	ERJ2GEJ153X	15K 1/32W	[M]
R8551	ERJ2GE0R00X	0 1/32W	[M]
R8552	ERJ2GEJ102X	1K 1/32W	[M]
R8553	ERJ2GEJ102X	1K 1/32W	[M]
R8554	ERJ2GEJ680X	68 1/32W	[M]
R8555	ERJ2GEJ2R2X	2.2 1/32W	[M]
R8556	ERJ3GEYJ560V	56 1/16W	[M]
R8557	ERJ3GEYJ510V	51 1/16W	[M]
R8558	ERJ2GEJ473X	47K 1/32W	[M]
R8559	ERJ2GEJ153X	15K 1/32W	[M]
R8561	ERJ2GE0R00X	0 1/32W	[M]
R8562	ERJ2GEJ102X	1K 1/32W	[M]
R8563	ERJ2GEJ102X	1K 1/32W	[M]
R8564	ERJ2GEJ220X	22 1/32W	[M]
R8565	ERJ2GEJ2R2X	2.2 1/32W	[M]
R8566	ERJ3GEYJ560V	56 1/16W	[M]
R8567	ERJ3GEYJ510V	51 1/16W	[M]
R8568	ERJ2GEJ473X	47K 1/32W	[M]
R8601	ERJ2GEJ104X	100K 1/32W	[M]
R8611	ERJ2GEJ101X	100 1/32W	[M]
R8621	ERJ2GEJ105X	1M 1/32W	[M]
R8622	ERJ2RHD102X	1K 1/32W	[M]

Ref. No.	Part No.	Part Name & Description	Remarks
R9040	ERJ2GEJ103X	10K 1/32W	[M]
R9042	ERJ2GEJ103X	10K 1/32W	[M]
RX8001	D1H410320002	CHIP RESISTOR	[M]
RX8011	D1H88204A024	CHIP RESISTOR	[M]
RX8012	D1H88204A024	CHIP RESISTOR	[M]
RX8013	D1H88204A024	CHIP RESISTOR	[M]
RX8014	D1H88204A024	CHIP RESISTOR	[M]
RX8015	D1H88204A024	CHIP RESISTOR	[M]
RX8016	D1H88204A024	CHIP RESISTOR	[M]
RX8017	D1H88204A024	CHIP RESISTOR	[M]
RX8018	D1H422020001	CHIP RESISTOR	[M]
RX8019	D1H422020001	CHIP RESISTOR	[M]
RX8020	D1H422020001	CHIP RESISTOR	[M]
RX8031	D1H447220001	CHIP RESISTOR	[M]
RX8032	D1H447220001	CHIP RESISTOR	[M]
RX8111	D1H422320002	CHIP RESISTOR	[M]
RX8401	D1H410120001	CHIP RESISTOR	[M]
RX8402	D1H410120001	CHIP RESISTOR	[M]
RX8403	D1H410120001	CHIP RESISTOR	[M]
RX8531	D1H456020001	CHIP RESISTOR	[M]
RX8532	D1H85604A024	CHIP RESISTOR	[M]
RX8533	D1H456020001	CHIP RESISTOR	[M]
RX8534	D1H456020001	CHIP RESISTOR	[M]
RX8611	D1H447220001	CHIP RESISTOR	[M]
RX8691	D1H410320002	CHIP RESISTOR	[M]
K2111	ERJ3GEY0R00V	CHIP JUMPER	[M]
K2211	ERJ3GEY0R00V	CHIP JUMPER	[M]
K8003	ERJ2GE0R00X	CHIP JUMPER	[M]
K8008	ERJ2GE0R00X	CHIP JUMPER	[M]
K8251	ERJ3GEY0R00V	CHIP JUMPER	[M]
K8421	ERJ3GEY0R00V	CHIP JUMPER	[M]
		CAPACITORS	
C1002	ECEA1HKN2R2B	2.2 50V	[M]
C1006	F2A1H1R0A234	1 50V	[M]
C1007	F0A2A472A034	4700P 100V	[M]
C1008	F2A1H1R0A234	1 50V	[M]
C1009	F2A1C470A234	47 16V	[M]
C1010	F2A1E1010056	100 25V	[M]
C1011	ECQV1H473JL3	0.047 50V	[M]
C1012	F1H1H102A219	1000P 50V	[M]
C1013	F1H1H102A219	1000P 50V	[M]
C1014	F1H1H102A219	1000P 50V	[M]
C1015	F1H1H102A219	1000P 50V	[M]
C1016	F1H1H222A013	2200P 50V	[M]
C1017	F1H1H222A013	2200P 50V	[M]
C1018	F1H1H332A013	3300P 50V	[M]
C1019	F1H1H102A219	1000P 50V	[M]
C1020	F1H1H471A219	470P 50V	[M]
C1021	F1H1H471A219	470P 50V	[M]
C1022	F1H1H102A219	1000P 50V	[M]
C1023	F1H1H102A219	1000P 50V	[M]
C1026	F2A0J470A245	47 6.3V	[M]
C1027	F1H1H102A219	1000P 50V	[M]
C1030	ECEA1AKA101B	100 10V	[M]
C1031	ECEA1AKA101B	100 10V	[M]
C1032	F1C1C183A023	0.018 16V	[M]
C1033	F1C1C183A023	0.018 16V	[M]
C1034	F2A1H3R3A145	3.3 50V	[M]
C1035	F2A1H3R3A145	3.3 50V	[M]
C1036	F1H1C333A071	0.033 16V	[M]
C1037	F2A1H3R3A145	3.3 50V	[M]
C1038	F1H1H221A748	220P 50V	[M]
C1039	F1H1H221A748	220P 50V	[M]
C1040	F2A1C100A234	10 16V	[M]
C1041	F2A1C100A234	10 16V	[M]
C1042	F2A1C220A234	22 16V	[M]
C1043	F2A1H4R7A234	4.7 50V	[M]
C1044	F2A1A330A204	33 10V	[M]
C1045	F2A1A220A204	22 10V	[M]
C1046	F2A1C221A236	220 16V	[M]

Ref. No.	Part No.	Part Name & Description	Remarks
C1049	F1H1H332A013	3300P 50V	[M]
C1050	F1H1H332A013	3300P 50V	[M]
C1056	F2A1C100A234	10 16V	[M]
C1057	F1H1H102A219	1000P 50V	[M]
C1058	F1H1H102A219	1000P 50V	[M]
C1059	F1H1H103A219	0.01 50V	[M]
C2004	F1H1C104A041	0.1 16V	[M]
C2021	F2A1C101A147	100 16V	[M]
C2022	EEUFM1A681B	680 10V	[M]
C2023	F1H1H103A219	0.01 50V	[M]
C2032	F1H1H103A219	0.01 50V	[M]
C2034	ECJ1VB1C105K	1 16V	[M]
C2035	ECJ1VB1C105K	1 16V	[M]
C2051	F2A1H4R7A014	4.7 50V	[M]
C2062	F1H1H103A219	0.01 50V	[M]
C2063	ECJ1VC1H101K	100P 50V	[M]
C2064	F2A1C100A234	10 16V	[M]
C2067	ECJ1VB1C105K	1 16V	[M]
C2068	ECJ1VB1C105K	1 16V	[M]
C2069	ECJ1VB1A474K	0.47 10V	[M]
C2070	ECJ1VC1H101K	100P 50V	[M]
C2071	F1H1H103A219	0.01 50V	[M]
C2073	F1H1H103A219	0.01 50V	[M]
C2074	ECJ1VC1H470J	47P 50V	[M]
C2102	F1H1C104A041	0.1 16V	[M]
C2103	F1H1H102A219	1000P 50V	[M]
C2104	F1H1C104A041	0.1 16V	[M]
C2105	ECJ1VB1H561K	560P 50V	[M]
C2106	F1H1H332A013	3300P 50V	[M]
C2107	F1H1C104A041	0.1 16V	[M]
C2108	F1H1H102A219	1000P 50V	[M]
C2111	F1H1C104A041	0.1 16V	[M]
C2112	F1H1H102A219	1000P 50V	[M]
C2116	ECJ1VB1H681K	680P 50V	[M]
C2117	ECJ1VC1H101K	100P 50V	[M]
C2118	ECJ1VB1C104K	0.1 16V	[M]
C2120	ECJ1VB1C105K	1 16V	[M]
C2121	ECJ1VB1C224K	0.22 16V	[M]
C2126	ECJ1VB1C224K	0.22 16V	[M]
C2131	ECJ1VB1A474K	0.47 10V	[M]
C2136	ECJ1VB1A474K	0.47 10V	[M]
C2141	ECJ1VB1C105K	1 16V	[M]
C2142	ECJ1VB1C105K	1 16V	[M]
C2151	F2A1C100A234	10 16V	[M]
C2166	F1H1H102A219	1000P 50V	[M]
C2194	F2A1H1R0A234	1 50V	[M]
C2195	F1H1C223A001	0.022 16V	[M]
C2197	ERJ3GEY0R00V	0 1/16W	[M]
C2202	F1H1C104A041	0.1 16V	[M]
C2203	F1H1H102A219	1000P 50V	[M]
C2204	F1H1C104A041	0.1 16V	[M]
C2205	ECJ1VB1H561K	560P 50V	[M]
C2206	F1H1H332A013	3300P 50V	[M]
C2207	F1H1C104A041	0.1 16V	[M]
C2208	F1H1H102A219	1000P 50V	[M]
C2211	F1H1C104A041	0.1 16V	[M]
C2212	F1H1H102A219	1000P 50V	[M]
C2216	ECJ1VB1H681K	680P 50V	[M]
C2217	ECJ1VC1H101K	100P 50V	[M]
C2218	ECJ1VB1C104K	0.1 16V	[M]
C2220	ECJ1VB1C105K	1 16V	[M]
C2221	ECJ1VB1H473K	0.047 50V	[M]
C2226	ECJ1VB1H473K	0.047 50V	[M]
C2231	ECJ1VB1C393K	0.039 16V	[M]
C2236	ECJ1VB1C393K	0.039 16V	[M]
C2241	ECJ1VB1C105K	1 16V	[M]
C2242	ECJ1VB1C105K	1 16V	[M]
C2245	F2A1C100A234	10 16V	[M]
C2251	F2A1C100A234	10 16V	[M]
C2266	F1H1H102A219	1000P 50V	[M]
C2294	F2A1H1R0A234	1 50V	[M]
C2295	F1H1C223A001	0.022 16V	[M]
C2297	ERJ3GEY0R00V	0 1/16W	[M]
C2301	ECJ1VC1H100D	10P 50V	[M]

Ref. No.	Part No.	Part Name & Description	Remarks
C2302	F1H1H470A230	47P 50V	[M]
C2311	ECJ1VB1C224K	0.22 16V	[M]
C2312	ECJ1VB1A684K	0.68 10V	[M]
C2313	ECJ1VC1H120J	12P 50V	[M]
C2314	F1H1H470A230	47P 50V	[M]
C2315	ECJ1VB1C105K	1 16V	[M]
C2331	ECJ1VB1C105K	1 16V	[M]
C2333	F2A1C100A147	10 16V	[M]
C2334	ECJ1VB1C105K	1 16V	[M]
C2335	ECJ1VB1H152K	1500P 50V	[M]
C2401	ECJ1VC1H100D	10P 50V	[M]
C2402	F1H1H470A230	47P 50V	[M]
C2411	ECJ1VB1C224K	0.22 16V	[M]
C2412	ECJ1VB1A684K	0.68 10V	[M]
C2413	ECJ1VC1H120J	12P 50V	[M]
C2414	F1H1H470A230	47P 50V	[M]
C2415	ECJ1VB1C105K	1 16V	[M]
C2501	ECEA1AKN100B	10 10V	[M]
C2520	F1H1H103A219	0.01 50V	[M]
C2521	F1H1H103A219	0.01 50V	[M]
C2550	F2A1E2210050	220 25V	[M]
C2551	ECJ1VC1H101K	100P 50V	[M]
C2552	F2A0J102A130	1000 6.3V	[M]
C2553	F2A0J101A167	100 6.3V	[M]
C2554	F1H1H103A219	0.01 50V	[M]
C2555	ECJ1VB1A105K	1 10V	[M]
C2556	F2A1E2210050	220 25V	[M]
C2561	ECJ1VB1C105K	1 16V	[M]
C2576	ECEA1HKN4R7B	4.7 50V	[M]
C2581	F2A1C101A147	100 16V	[M]
C2582	F2A1C101A147	100 16V	[M]
C2583	ECJ1VB1C224K	0.22 16V	[M]
C2584	F1H1H221A748	220P 50V	[M]
C2585	F1H1H221A748	220P 50V	[M]
C2586	F1H1H103A219	0.01 50V	[M]
C2587	F1H1H103A219	0.01 50V	[M]
C2588	F1H1C104A041	0.1 16V	[M]
C2812	ECJ1VC1H101K	100P 50V	[M]
C2813	ECJ1VC1H101K	100P 50V	[M]
C2814	ECJ1VC1H101K	100P 50V	[M]
C2815	ECJ1VC1H101K	100P 50V	[M]
C2816	ECJ1VC1H101K	100P 50V	[M]
C2817	ECJ1VC1H101K	100P 50V	[M]
C2818	ECJ1VC1H101K	100P 50V	[M]
C2819	ECJ1VC1H101K	100P 50V	[M]
C2820	ECJ1VC1H101K	100P 50V	[M]
C2821	ECJ1VC1H101K	100P 50V	[M]
C2831	F1H1C223A001	0.022 16V	[M]
C2832	F1H1H331A013	330P 50V	[M]
C2833	F1H1H331A013	330P 50V	[M]
C2834	ECJ1VC1H680J	68P 50V	[M]
C2838	ECJ1VC1H680J	68P 50V	[M]
C2840	ECJ1VC1H180J	18P 50V	[M]
C2841	ECJ1VC1H180J	18P 50V	[M]
C2851	F1H1C104A041	0.1 16V	[M]
C2852	F2A1C471A236	470 16V	[M]
C2853	F1H1C104A041	0.1 16V	[M]
C2854	F2A1C101A147	100 16V	[M]
C2856	ECJ1VB1C105K	1 16V	[M]
C2857	F2A1H3R3A013	3.3 50V	[M]
C2858	F1H1H103A219	0.01 50V	[M]
C2860	ECJ1VC1H101K	100P 50V	[M]
C2861	ECJ1VC1H101K	100P 50V	[M]
C2862	ECJ1VC1H101K	100P 50V	[M]
C2863	ECJ1VC1H101K	100P 50V	[M]
C2864	ECJ1VC1H101K	100P 50V	[M]
C2865	ECJ1VC1H101K	100P 50V	[M]
C2866	ECJ1VC1H101K	100P 50V	[M]
C2867	ECJ1VC1H101K	100P 50V	[M]
C2868	ECJ1VC1H101K	100P 50V	[M]
C2901	ECJ1VC1H101K	100P 50V	[M]
C2902	ECJ1VC1H101K	100P 50V	[M]
C2904	ECJ1VC1H101K	100P 50V	[M]
C2905	F1H1H103A219	0.01 50V	[M]

Ref. No.	Part No.	Part Name & Description	Remarks
C2906	F2A1C100A234	10 16V	[M]
C2908	ECJ1VC1H101K	100P 50V	[M]
C2909	ECJ1VC1H101K	100P 50V	[M]
C2910	ECJ1VC1H101K	100P 50V	[M]
C2911	ECA1AAK221XB	220 10V	[M]
C2912	F1H1H103A219	0.01 50V	[M]
C2913	F2A1H220A234	22 50V	[M]
C2914	F1H1C104A041	0.1 16V	[M]
C2915	F1H1H103A219	0.01 50V	[M]
C2916	ECJ1VC1H101K	100P 50V	[M]
C2917	F1H1H103A219	0.01 50V	[M]
C2918	F1H1H103A219	0.01 50V	[M]
C2919	F2A0J102A130	1000 6.3V	[M]
C2920	F2A0J102A130	1000 6.3V	[M]
C2922	F2A0J102A130	1000 6.3V	[M]
C2923	F2A0J102A130	1000 6.3V	[M]
C2924	F2A0J102A130	1000 6.3V	[M]
C2925	F1H1C104A041	0.1 16V	[M]
C2926	F2A1H1R0A234	1 50V	[M]
C2927	ECJ1VB1C105K	1 16V	[M]
C2932	F1H1C104A041	0.1 16V	[M]
C2933	F1H1C104A041	0.1 16V	[M]
C2940	F1H1C104A041	0.1 16V	[M]
C2941	F2A1C330A234	33 16V	[M]
C2944	ECJ1VC1H101K	100P 50V	[M]
C2945	F2A1C470A234	47 16V	[M]
C2947	F2A0J101A167	100 6.3V	[M]
C2948	F2A0J221A167	220 6.3V	[M]
C2975	ECJ1VC1H560J	56P 50V	[M]GC/GS
C2976	F2A1C100A234	10 16V	[M]
C2977	F2A0J331A015	330 6.3V	[M]
C2978	F1H1C104A041	0.1 16V	[M]
C2979	F2A1C470A234	47 16V	[M]
C2980	F2A1C470A234	47 16V	[M]
C2981	F2A1C101A147	100 16V	[M]
C2982	ECEA1CKA221B	220 16V	[M]
C2990	F1H1H103A219	0.01 50V	[M]
C5101	ECA1VM472E	4700 35V	[M]
C5102	ECA2AM100B	10 100V	[M]
C5103	ECA2AM100B	10 100V	[M]
C5104	ECA1VM472E	4700 35V	[M]
C5105	F2A0J221A167	220 6.3V	[M]
C5106	F1K2A1040006	0.1 100V	[M]
C5107	F1K2A1040006	0.1 100V	[M]
C5109	F2A1E1010056	100 25V	[M]
C5110	F2A1E1010056	100 25V	[M]
C5111	F2A0J101A167	100 6.3V	[M]
C5112	F2A1E100A202	10 25V	[M]
C5113	ECA1HM330B	33 50V	[M]
C5119	F2A1V471A141	470 35V	[M]
C5120	F2A1V471A141	470 35V	[M]
C5121	F2A1C100A234	10 16V	[M]
C5123	F2A1V471A141	470 35V	[M]
C5124	F2A1V471A141	470 35V	[M]
C5151	ECJ1VB1H104K	0.1 50V	[M]
C5152	ECJ1VB1H104K	0.1 50V	[M]
C5153	ECJ1VB1H104K	0.1 50V	[M]
C5155	F1H1H102A219	1000P 50V	[M]
C5157	F1H1H103A219	0.01 50V	[M]
C5158	F1H1H103A219	0.01 50V	[M]
C5159	F1H1H103A219	0.01 50V	[M]
C5161	ECJ1VB1H473K	0.047 50V	[M]
C5163	ECJ1VB1H473K	0.047 50V	[M]
C5165	ECA1JM102E	1000 63V	[M]
C5166	ECA1JM102E	1000 63V	[M]
C5167	F1K2A1040006	0.1 100V	[M]
C5168	F1K2A1040006	0.1 100V	[M]
C5171	ECA1JM102E	1000 63V	[M]
C5172	ECA1JM102E	1000 63V	[M]
C5201	F1H1H471A219	470P 50V	[M]
C5202	ECJ1VC1H101K	100P 50V	[M]
C5203	ECJ1VC1H101K	100P 50V	[M]
C5204	ECJ1VC1H101K	100P 50V	[M]

Ref. No.	Part No.	Part Name & Description	Remarks
C5205	ECJ1VB1H104K	0.1 50V	[M]
C5207	ECJ1VC1H101K	100P 50V	[M]
C5208	F2A0J221A167	220 6.3V	[M]
C5210	F1H1H470A230	47P 50V	[M]
C5211	ECEA0JKS101B	100 6.3V	[M]
C5301	ECJ1VB1A474K	0.47 10V	[M]
C5302	F1H1H331A013	330P 50V	[M]
C5303	ECJ1VB1A474K	0.47 10V	[M]
C5305	F1H1H331A013	330P 50V	[M]
C5308	ECJ1VB1H104K	0.1 50V	[M]
C5309	ECJ1VB1H104K	0.1 50V	[M]
C5310	F1K2A1040006	0.1 100V	[M]
C5311	F1H1H221A748	220P 50V	[M]
C5312	F1L1H105A077	1 50V	[M]
C5313	ECJ1VB1H153K	0.015 50V	[M]
C5314	F1K2A1040006	0.1 100V	[M]
C5315	F1L1H105A077	1 50V	[M]
C5316	ECJ1VB1H104K	0.1 50V	[M]
C5317	F1L1H105A077	1 50V	[M]
C5318	F1K2A1040006	0.1 100V	[M]
C5319	ECJ1VB1H153K	0.015 50V	[M]
C5320	F1L1H105A077	1 50V	[M]
C5321	F1K2A1040006	0.1 100V	[M]
C5322	ECJ1VB1H104K	0.1 50V	[M]
C5323	ECJ1VB1H104K	0.1 50V	[M]
C5324	ECQV1H474JL3	0.47 50V	[M]
C5325	ECJ1VB1H104K	0.1 50V	[M]
C5327	ECQV1H474JL3	0.47 50V	[M]
C5328	ECJ1VB1H104K	0.1 50V	[M]
C5330	F1H2A221A009	220P 100V	[M]
C5331	F1H2A221A009	220P 100V	[M]
C5332	F1H2A221A009	220P 100V	[M]
C5333	F1H2A221A009	220P 100V	[M]
C5335	ECJ1VB1H153K	0.015 50V	[M]
C5336	F1H1H102A219	1000P 50V	[M]
C5337	F1H1H102A219	1000P 50V	[M]
C5339	ECJ1VB1A474K	0.47 10V	[M]
C5340	ECJ1VB1A474K	0.47 10V	[M]
C5343	ECJ1VB1H153K	0.015 50V	[M]
C5344	F1H1H102A219	1000P 50V	[M]
C5345	F1H1H102A219	1000P 50V	[M]
C5435	ECJ1VB1H153K	0.015 50V	[M]
C5438	ECJ1VB1H153K	0.015 50V	[M]
C5501	ECJ1VB1A474K	0.47 10V	[M]
C5502	F1H1H331A013	330P 50V	[M]
C5503	ECJ1VB1A474K	0.47 10V	[M]
C5508	ECJ1VB1H104K	0.1 50V	[M]
C5509	ECJ1VB1H104K	0.1 50V	[M]
C5510	F1K2A1040006	0.1 100V	[M]
C5511	F1H1H221A748	220P 50V	[M]
C5512	F1L1H105A077	1 50V	[M]
C5513	ECJ1VB1H153K	0.015 50V	[M]
C5514	F1K2A1040006	0.1 100V	[M]
C5515	F1L1H105A077	1 50V	[M]
C5516	ECJ1VB1H104K	0.1 50V	[M]
C5517	F1L1H105A077	1 50V	[M]
C5518	F1K2A1040006	0.1 100V	[M]
C5520	F1L1H105A077	1 50V	[M]
C5521	F1K2A1040006	0.1 100V	[M]
C5522	ECJ1VB1H104K	0.1 50V	[M]
C5523	ECJ1VB1H104K	0.1 50V	[M]
C5527	ECQV1H474JL3	0.47 50V	[M]
C5528	ECJ1VB1H104K	0.1 50V	[M]
C5530	F1H2A221A009	220P 100V	[M]
C5531	F1H2A221A009	220P 100V	[M]
C5536	ECJ1VB1H153K	0.015 50V	[M]
C5537	ECJ1VB1H153K	0.015 50V	[M]
C5538	F1H1H102A219	1000P 50V	[M]
C5539	F1H1H102A219	1000P 50V	[M]
C5551	ECQE2104KF3	0.1 250V	[M]
C5552	ECQE2104KF3	0.1 250V	[M]
C5709	F2A1C101A147	100 16V	[M]
C5710	F1H1H103A219	0.01 50V	[M]
C5711	F2A1C100A234	10 16V	[M]

Ref. No.	Part No.	Part Name & Description	Remarks
C5712	F1H1H103A219	0.01 50V	[M]
C5713	F2A1C100A234	10 16V	[M]
C5950	F2B1E222A005	2200 25V	[M]
C5951	F1B1H103A007	0.01 50V	[M]
C5952	F2A1A470A204	47 10V	[M]
C5953	F1B1H103A007	0.01 50V	[M]
C5954	F1B1H103A007	0.01 50V	[M]
C5955	ECA1HM220B	22 50V	[M]
C5956	ECA1HAM470XB	47 50V	[M]
C5957	F2A1H100A145	10 50V	[M]
C5958	F1B1H103A007	0.01 50V	[M]
C5959	F1B1H103A007	0.01 50V	[M]
C5960	ECQE2104KF3	0.1 250V	[M]
C5961	F2A1C471A236	470 16V	[M]GS/GCS/GCT
C5962	F2A1C471A236	470 16V	[M]GS/GCS/GCT
C5963	F2A1H4R7A234	4.7 50V	[M]
C5964	F1B1H103A007	0.01 50V	[M]GS/GCS/GCT
C5965	F1B1H103A007	0.01 50V	[M]
C5966	F2B1E222A005	2200 25V	[M]
C5971	F2A1E471A205	470 25V	[M]
C6401	ECJ1VB1H104K	0.1 50V	[M]
C6402	F1H1H103A219	0.01 50V	[M]
C6403	ECJ1VC1H101K	100P 50V	[M]
C6404	ECJ1VC1H101K	100P 50V	[M]
C6405	ECJ1VC1H101K	100P 50V	[M]
C6421	ECJ1VC1H101K	100P 50V	[M]
C6425	ECJ1VC1H101K	100P 50V	[M]
C6481	F2A1A470A388	47 10V	[M]
C6482	F1H1H102A219	1000P 50V	[M]
C6483	F1H1H103A219	0.01 50V	[M]
C6491	ECJ1VC1H101K	100P 50V	[M]
C6492	ECJ1VC1H101K	100P 50V	[M]
C6551	F1H1H103A219	0.01 50V	[M]
C6552	F1H1H103A219	0.01 50V	[M]
C6553	F1H1H103A219	0.01 50V	[M]
C6554	F1H1H103A219	0.01 50V	[M]
C6555	F1H1H103A219	0.01 50V	[M]
C6556	F1H1H103A219	0.01 50V	[M]
C6601	ECJ1VC1H101K	100P 50V	[M]
C6603	ECJ1VC1H101K	100P 50V	[M]
C6604	ECJ1VC1H101K	100P 50V	[M]
C6623	ECA1HM220B	22 50V	[M]
C6631	ECA1HM220B	22 50V	[M]
C6632	ECA1HM220B	22 50V	[M]
C6635	ECA1HM220B	22 50V	[M]
C6636	ECJ1VC1H101K	100P 50V	[M]
C6901	ECJ1VB1H223K	0.022 50V	[M]
C6902	ECJ1VB1H223K	0.022 50V	[M]
C6903	F1H1H103A219	0.01 50V	[M]
C6904	ECJ1VB1C105K	1 16V	[M]
C6905	F2A1H3R3A145	3.3 50V	[M]
C6907	F1H1H471A219	470P 50V	[M]
C6908	F2A1H4R7A234	4.7 50V	[M]
C6909	ECJ1VC1H101K	100P 50V	[M]
C6910	F2A1HR10A234	0.1 50V	[M]
C6911	F1H1H563A748	0.056 50V	[M]
C6912	F2A1H1R0A234	1 50V	[M]
C6913	F1H1H102A219	1000P 50V	[M]
C6914	ECJ1VC1H101K	100P 50V	[M]
C6915	F2A1HR33A145	0.33 50V	[M]
C6916	F1H1H102A219	1000P 50V	[M]
C6917	F2A1C471A236	470 16V	[M]
C6918	ECJ1VB1C683K	0.068 16V	[M]
C6919	ECJ1VB1H152K	1500P 50V	[M]
C6920	ECJ1VB1H682K	6800P 50V	[M]
C6921	F1H1C104A041	0.1 16V	[M]
C6922	F1H1H103A219	0.01 50V	[M]
C6923	F1H1H103A219	0.01 50V	[M]
C6924	ECJ1VB1C683K	0.068 16V	[M]
C6925	ECJ1VB1C224K	0.22 16V	[M]
C6926	ECJ1VB1C224K	0.22 16V	[M]

Ref. No.	Part No.	Part Name & Description	Remarks
C6927	F1H1H102A219	1000P 50V	[M]
C6928	ECJ1VB1H153K	0.015 50V	[M]
C6929	ECJ1VC1H101K	100P 50V	[M]
C6930	ECJ1VC1H101K	100P 50V	[M]
C6931	F2A1A470A388	47 10V	[M]
C6932	F2A1A470A388	47 10V	[M]
C6933	F1H1A105A025	1 10V	[M]
C6934	F2A0J221A167	220 6.3V	[M]
C6935	F2A1A470A388	47 10V	[M]
C6936	F2A0J221A167	220 6.3V	[M]
C6937	F1H1A105A025	1 10V	[M]
C6939	ECJ1VB1C105K	1 35V	[M]
C6940	F1H1H104A013	0.1 50V	[M]GCS/GCT
C8001	F2G0G331A012	330 4V	[M]
C8002	ECJ0EF1C104Z	0.1 16V	[M]
C8003	ECJ0EF1C104Z	0.1 16V	[M]
C8004	ECJ0EF1C104Z	0.1 16V	[M]
C8005	ECJ0EF1C104Z	0.1 16V	[M]
C8006	ECJ0EF1C104Z	0.1 16V	[M]
C8007	ECJ0EF1C104Z	0.1 16V	[M]
C8008	ECJ0EF1C104Z	0.1 16V	[M]
C8011	F2G0J101A066	100 6.3V	[M]
C8012	ECJ0EF1C104Z	0.1 16V	[M]
C8013	ECJ0EF1C104Z	0.1 16V	[M]
C8014	ECJ0EF1C104Z	0.1 16V	[M]
C8015	ECJ0EF1C104Z	0.1 16V	[M]
C8016	ECJ0EF1C104Z	0.1 16V	[M]
C8018	ECJ0EF1C104Z	0.1 16V	[M]
C8020	ECJ0EF1C104Z	0.1 16V	[M]
C8021	ECJ0EF1C104Z	0.1 16V	[M]
C8022	ECJ0EF1C104Z	0.1 16V	[M]
C8026	ECJ0EF1C104Z	0.1 16V	[M]
C8051	ECJ1VB0J105K	1 6.3V	[M]
C8052	F1G1A1040006	0.1 10V	[M]
C8053	ECJ0EF1C104Z	0.1 16V	[M]
C8054	ECJ0EC1H221J	220P 50V	[M]
C8055	ECJ1VB0J105K	1 6.3V	[M]
C8056	ECJ0EB1E222K	2200P 25V	[M]
C8057	ECJ1VB0J105K	1 6.3V	[M]
C8111	F1G1A1040006	0.1 10V	[M]
C8112	ECJ1VB0J105K	1 6.3V	[M]
C8113	ECJ0EB1E471K	470P 25V	[M]
C8151	ECJ1VB0J475K	4.7 6.3V	[M]
C8152	ECJ1VB1C105K	1 16V	[M]
C8201	F2G0J101A066	100 6.3V	[M]
C8202	F1G1A1040006	0.1 10V	[M]
C8203	F1G1A1040006	0.1 10V	[M]
C8211	ECJ0EB1E122K	1200P 25V	[M]
C8221	ECJ0EB1E102K	1000P 25V	[M]
C8222	ECJ0EB1E102K	1000P 25V	[M]
C8225	ECJ0EB1E102K	1000P 25V	[M]
C8226	ECJ0EB1E821K	820P 25V	[M]
C8231	F1G1A1040006	0.1 10V	[M]
C8232	F1G1A1040006	0.1 10V	[M]
C8251	F2G0J221A065	220 6.3V	[M]
C8252	ECJ0EF1C104Z	0.1 16V	[M]
C8253	ECJ0EF1C104Z	0.1 16V	[M]
C8255	F2G1C220A037	22 16V	[M]
C8256	ECJ0EF1C104Z	0.1 16V	[M]
C8257	F2G1C470A076	47 16V	[M]
C8258	ECJ0EF1C104Z	0.1 16V	[M]
C8261	ECJ0EF1C104Z	0.1 16V	[M]
C8262	ECJ0EF1C104Z	0.1 16V	[M]
C8301	F2G0J221A031	220 6.3V	[M]
C8302	F2G0J330A031	33 6.3V	[M]
C8303	F1G1A1040006	0.1 10V	[M]
C8304	F1G1A1040006	0.1 10V	[M]
C8305	F1G1A1040006	0.1 10V	[M]
C8306	F1G1A1040006	0.1 10V	[M]
C8311	F1G1A1040006	0.1 10V	[M]
C8312	ECJ1VB0J105K	1 6.3V	[M]
C8313	ECJ1VB0J105K	1 6.3V	[M]
C8321	ECJ0EF1C104Z	0.1 16V	[M]

Ref. No.	Part No.	Part Name & Description	Remarks
C8325	ECJ0EF1C104Z	0.1 16V	[M]
C8330	F2G0J470A031	47 6.3V	[M]
C8331	ECJ0EF1C104Z	0.1 16V	[M]
C8335	ECJ0EF1C104Z	0.1 16V	[M]
C8341	ECJ0EF1C104Z	0.1 16V	[M]
C8401	ECJ0EC1H150J	15P 50V	[M]
C8421	F2G0J101A083	100 6.3V	[M]
C8422	ECJ0EF1C104Z	0.1 16V	[M]
C8423	F2G0J330A083	33 6.3V	[M]
C8424	ECJ0EF1C104Z	0.1 16V	[M]
C8429	ECJ0EF1C104Z	0.1 16V	[M]
C8430	F2G0J470A031	47 6.3V	[M]
C8431	ECJ0EF1C104Z	0.1 16V	[M]
C8501	F2G0J101A031	100 6.3V	[M]
C8502	ECJ0EF1C104Z	0.1 16V	[M]
C8503	ECJ0EF1C104Z	0.1 16V	[M]
C8504	ECJ0EF1C104Z	0.1 16V	[M]
C8505	ECJ0EF1C104Z	0.1 16V	[M]
C8511	ECJ1VB0J105K	1 6.3V	[M]
C8512	ECJ1VB0J105K	1 6.3V	[M]
C8513	F1G1A1040006	0.1 10V	[M]
C8514	F1G1A1040006	0.1 10V	[M]
C8515	F1G1A1040006	0.1 10V	[M]
C8516	F1G1A1040006	0.1 10V	[M]
C8521	F1G1A1040006	0.1 10V	[M]
C8522	F1G1A1040006	0.1 10V	[M]
C8523	ECJ0EF1C104Z	0.1 16V	[M]
C8524	ECJ0EF1C104Z	0.1 16V	[M]
C8525	ECJ0EB1C562K	5600P 16V	[M]
C8526	ECJ0EB1C183K	0.018 16V	[M]
C8527	ECJ0EB1A333K	0.033 10V	[M]
C8528	ECJ1VB0J105K	1 6.3V	[M]
C8529	ECJ1VB0J105K	1 6.3V	[M]
C8530	ECJ0EF1C104Z	0.1 16V	[M]
C8531	ECJ0EC1H101J	100P 50V	[M]
C8532	ECJ0EC1H221J	220P 50V	[M]
C8533	ECJ0EF1C104Z	0.1 16V	[M]
C8541	ECJ0EB1E472K	4700P 25V	[M]
C8550	F2G0J330A031	33 6.3V	[M]
C8551	ECJ0EF1C104Z	0.1 16V	[M]
C8552	F2G1C100A072	10 16V	[M]
C8553	F2G0J470A031	47 6.3V	[M]
C8554	ECJ1VB0J105K	1 6.3V	[M]
C8561	ECJ0EF1C104Z	0.1 16V	[M]
C8562	F2G1C100A072	10 16V	[M]
C8563	F2G0J470A031	47 6.3V	[M]
C8564	ECJ1VB0J105K	1 6.3V	[M]
C8571	F1K1A1060017	10 10V	[M]
C8572	ECJ0EF1C104Z	0.1 16V	[M]
C8601	ECJ0EF1C104Z	0.1 16V	[M]
C8602	ECJ0EB1C153K	0.015 16V	[M]
C8606	ECJ0EF1C104Z	0.1 16V	[M]
C8611	ECJ0EF1C104Z	0.1 16V	[M]
C8621	ECJ0EC1H120J	12P 50V	[M]
C8622	ECJ0EC1H100D	10P 50V	[M]
C8651	ECJ0EF1C104Z	0.1 16V	[M]
C8652	ECJ0EF1C104Z	0.1 16V	[M]
C8691	ECJ0EF1C104Z	0.1 16V	[M]
C8695	ECJ0EF1C104Z	0.1 16V	[M]
FL8101	F1H0J1050022	CHIP CAPACITOR	[M]
FL8102	F1H0J1050022	CHIP CAPACITOR	[M]
FL8103	F1H0J1050022	CHIP CAPACITOR	[M]
FL8104	F1J1E1040022	CHIP CAPACITOR	[M]