ORDER NO.AD1410046CE

Service Manual

Active Speaker System

Model No. SC-BMAX3GN

Remote Control

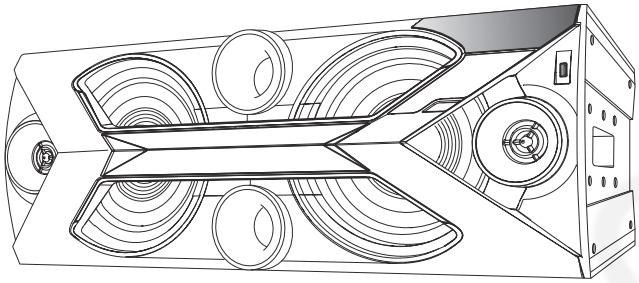

SC-BMAX3

Colour:(K).....Black Type

⚠ WARNING

This service information is designed for experienced repair technicians only and is not designed for use by the general public. It does not contain warnings or cautions to advise non-technical individuals of potential dangers in attempting to service a product. Products powered by electricity should be serviced or repaired only by experienced professional technicians. Any attempt to service or repair the product or products dealt with in this service information by anyone else could result in serious injury or death.

Panasonic®

© Panasonic Corporation 2014
Unauthorized copying and distribution is a violation of law.

TABLE OF CONTENTS

PAGE

1 Safety Precautions ---------- 3
1.1. General Guidelines ---------- 3
1.2. Leakage Current Cold Check ---------- 3
1.3. Leakage Current Hot Check (See Figure 1.) --------- 3
1.4. Protection Circuitry---------- 3
2 Warning ---------- 4
2.1. Prevention of Electrostatic Discharge (ESD) to Electrostatically Sensitive (ES) Devices ---------- 4
3 Service Navigation ---------- 5
3.1. Service Information ----------5
3.2. General Description About Lead Free Solder (PbF)---------- 5
3.2. How to Update Firmware ---------- 5
4 Specifications ----------7
5 Location of Controls and Components ----------8
6 Service Mode ---------- 12
6.1.How to Enter Self-Diagnosis Function mode --------- 12
6.2.Self-Diagnosis Function---------- 12
6.3.Service Mode ---------- 13
7 Troubleshooting Guide ---------- 14
7.1. No power---------- 14
7.2. No Display on display panel ---------- 14
7.3. Bluetooth® Pairing failure ---------- 14
7.4. No Charging a Device ---------- 15
7.5. No Key Function ---------- 15
7.6. No remote control function ---------- 15
7.7. No Sound ---------- 16
7.8. No signal from AUDIO OUT Terminal---------- 17
7.9. No Fan ---------- 18
7.10. No illumination ---------- 18
7.11. Check Points ---------- 19
8 Wiring Connection and Voltage Data ---------- 21
9 Disassembly and Assembly Instructions---------- 23
9.1.Disassembly Flow Chart ---------- 23
9.2.P.C.B. Location---------- 23
9.3.Disassembly Procedure---------- 24
10 Exploded View and Replacement Parts List ---------- 28
10.1. Casing Parts & Mechanism Section---------- 28
10.2. Packing & Accessories Section---------- 29
10.3. Replacement Parts List---------- 30

P1_3000884

1 Safety Precautions

1.1. General Guidelines

1. IMPORTANT SAFETY NOTICE

There are special components used in this equipment which are important for safety. These parts are marked by ⚠ in the Schematic Diagrams, Circuit Board Layout, Exploded Views and Replacement Parts List. It is essential that these critical parts should be replaced with manufacturer's specified parts to prevent X-RADIATION, shock, fire, or other hazards. Do not modify the original design without permission of manufacturer.

2. An Isolation Transformer should always be used during the servicing of AC Adaptor whose chassis is not isolated from the AC power line. Use a transformer of adequate power rating as this protects the technician from accidents resulting in personal injury from electrical shocks. It will also protect AC Adaptor from being damaged by accidental shorting that may occur during servicing.
3. When servicing, observe the original lead dress. If a short circuit is found, replace all parts which have been overheated or damaged by the short circuit.
4. After servicing, see to it that all the protective devices such as insulation barriers, insulation papers shields are properly installed.

5.After servicing, make the following leakage current checks to prevent the customer from being exposed to shock hazards.

1.2. Leakage Current Cold Check

1. Unplug the AC cord and connect a jumper between the two prongs on the plug.
2. Measure the resistance value, with an ohmmeter, between the jumpered AC plug and each exposed metallic cabinet part on the equipment such as screwheads, connectors, control shafts, etc. When the exposed metallic part has a return path to thechassis, the reading should be between 1 MΩ and 5.2 MΩ. When the exposed metal does not have a return path to the chas-sis, the reading must be infinity.

1.3. Leakage Current Hot Check (See Figure. 1)

1. Plug the AC cord directly into the AC outlet. Do not use an isolation transformer for this check.
2. Connect a 1.5 kΩ, 10 W resistor, in parallel with a 0.15 μF capacitor, between each exposed metallic part on the set and a good earth ground, as shown in Figure. 1.
3. Use an AC voltmeter, with 1 kΩ/V or more sensitivity, to measure the potential across the resistor.
4. Check each exposed metallic part, and measure the voltage at each point.
5. Reverse the AC plug in the AC outlet and repeat each of the above measurements.
6. The potential at any point should not exceed 0.75 V RMS. A leakage current tester (Simpson Model 229 or equivalent) maybe used to make the hot checks, leakage current must not exceed 1/2 mA. In case a measurement is outside of the limitsspecified, there is a possibility of a shock hazard, and the equipment should be repaired and rechecked before it is returned tothe customer.

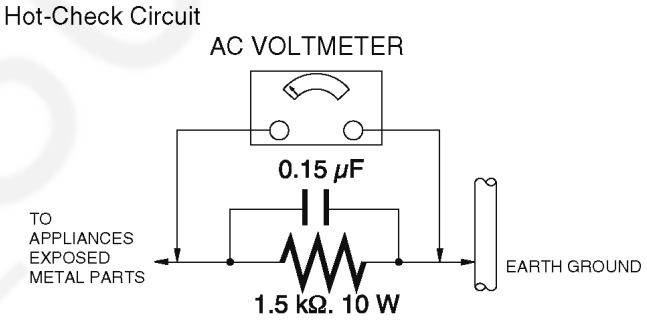

Figure. 1

1.4. Protection Circuitry

The protection circuitry may have operated if either of the following conditions are noticed:

- No sound is heard when the power is turned on.
- Sound stops during a performance.

The function of this circuitry is to prevent circuitry damage if, for example, the positive and negative speaker connection wires are"shorted", or if speaker systems with an impedance less than the indicated rated impedance of the amplifier are used.If this occurs, follow the procedure outlines below:

1. Turn off the power.
2. Determine the cause of the problem and correct it.
3. Turn on the power once again after one minute.

Note:

When the protection circuitry functions, the unit will not operate unless the power is first turned off and then on again

2 Warning

2.1. Prevention of Electrostatic Discharge (ESD) to Electrostatically Sensitive (ES) Devices

Some semiconductor (solid state) devices can be damaged easily by static electricity. Such components commonly are called Electrostatically Sensitive (ES) Devices.

> Examples of typical ES devices are IC(integrated circuits)and some field-effect transistors and semiconductor “chip” components.

The following techniques should be used to help reduce the incidence of component damage caused by electrostatic discharge(ESD).

1. Immediately before handling any semiconductor component or semiconductor-equipped assembly, drain off any ESD on your body by touching a known earth ground. Alternatively, obtain and wear a commercially available discharging ESD wrist strap, which should be removed for potential shock reasons prior to applying power to the unit under test.
2. After removing an electrical assembly equipped with ES devices, place the assembly on a conductive surface such as aluminum foil, to prevent electrostatic charge buildup or exposure of the assembly.
3. Use only a grounded-tip soldering iron to solder or unsolder ES devices.
4. Use only an antistatic solder removal device. Some solder removal devices not classified as "antistatic (ESD protected)" can generate electrical charge sufficient to damage ES devices.
5. Do not use freon-propelled chemicals. These can generate electrical charges sufficient to damage ES devices.
6. Do not remove a replacement ES device from its protective package until immediately before you are ready to install it. (Most replacement ES devices are packaged with leads electrically shorted together by conductive foam, aluminum foil or comparable conductive material).
7. Immediately before removing the protective material from the leads of a replacement ES device, touch the protective material to the chassis or circuit assembly into which the device will be installed.

   CAUTION :

   Be sure no power is applied to the chassis or circuit, and observe all other safety precautions.
8. Minimize bodily motions when handling unpackaged replacement ES devices. (Otherwise harmless motion such as the brushing together of your clothes fabric or the lifting of your foot from a carpeted floor can generate static electricity (ESD) sufficient to damage an ES device).

IMPORTANT SAFETY NOTICE

There are special components used in this equipment which are important for safety. These parts are marked by⚠ in the Schematic Diagrams, Circuit Board Diagrams, Exploded View and Replacement Parts List, It is essential that these critical parts should be replaced with manufacturer’s specified, parts to prevent shock, fire or other hazards, Do not modify the original design without permission of manufacturer.

3 Service Navigation

3.1. Service Information

This service manual contains technical information, which allow service personnels to understand and service this model.
Please place orders with the numbers in the parts list and not the numbers in the explossion illustration.
If the circuit is changed or modified, the information will be followed by service manual to be controlled with original service manual.

3.2. General Description About Lead Free Solder (PbF)

The lead free solder has been used in the mounting process of all electrical components on the printed circuit boards used for thisequipment in considering the globally environmental conservation.
The normal solder is the alloy of tin (Sn) and lead (Pb). On the other hand, the lead free solder is the alloy mainly consists of tin(Sn), silver (Ag) and Copper (Cu), and the melting point of the lead free solder is higher approx.30°C (86°F) more than that of thenormal solder.

Distinction of P.C.B. Lead Free Solder being used

The letter of " PbF" is printed either foil side or components side on the P.C.B.using the lead free solder.(See right figure)	PbF

Service caution for repair work using Lead Free Solder (PbF)

- The lead free solder has to be used when repairing the equipment for which the lead free solder is used. (Definition: The letter of “PbF” is printed on the P.C.B. using the lead free solder.)
- To put lead free solder, it should be well molten and mixed with the original lead free solder.
- Remove the remaining lead free solder on the P.C.B. cleanly for soldering of the new IC.
- Since the melting point of the lead free solder is higher than that of the normal lead solder, it takes the longer time to melt the lead free solder.
- Use the soldering iron (more than 70W) equipped with the temperature control after setting the temperature at 350±30°C(662±86°F).

Recommended Lead Free Solder (Service Parts Route.)

- The following 3 types of lead free solder are available through the service parts route.
  SVKZ000001----------(0.3mm 100g Reel)
  SVKZ000002----------(0.6mm 100g Reel)
  SVKZ000003----------(1.0mm 100g Reel)

Note

* Ingredient: Tin (Sn) 96.5%, Silver (Ag) 3.0%, Copper (Cu) 0.5%. (Flux cored)

3.3. How to Update Firmware

The firmware of the unit may be renewed to improve the quality including operational performance and playability.Make sure to refer the following procedure when performing version-up.

Step 1 Confirmation of the Firmware Version

1. Turn the unit on.
2. Hold the [VOL-] on the main unit, then press [MUTE] [VOL+] on the remote control, Software version will appear.

Software version (Example)

NOTE:Software version displays for about ten seconds.
Please make a note of the version number.

Step 2 Download the latest firmware.

The latest firmware can be downloaded from "Support Information from NWBG/VDBG PAVC"web-site in "TSN system".

Click the file name to download.

After download, click the file to decompress. (Total: 2 files)

Step 3 Decompress the downloaded files

The decompressed files will be named as follows

File Name: UPDBMAX3.BIN and BMAX3.MP3

Copy these two files to root directory of the USB device

NOTE:

BMAX3.MP3 is played as a guiding file.

Make sure there are only two files (UPDBMAX3.BIN and BMAX3.MP3) in the USB device.

Step 4 Update Firmware.

1. Turn the unit power on.
2. Insert the USB device.
   (This unit has 2 update methods, update via the main unit key(3.1), or update via the remote control(3.2))

3.1.In USB mode press [POWER] and [VOL+] on the main unit simultaneously for 3 seconds.
Display shows "UPDATING", entry boot loader for update.

3.2.During BMAX3.MP3 playing, press [DISPLAY] on the remote control for several times.
The display shows "UPDATING", entry the boot loader to update.

4. As the LED blinking faster, the first circle update takes about 30 seconds to verify UPDBMAX3.bin; then the second circle update takes about 50 seconds. When completing the update, the unit will power off.

NOTE:

If the LED blinks slowly for more than 2 minutes, the update failed. Please try to format USB device or use other USB devices to update again.

PL3000884

4 Specifications

■ GENERAL

Power consumption	80 W
Power consumption in standby mode	Approx. 1.0 W
Power supply	AC 220 V to 240 V, 50 Hz

Dimensions (W×H×D)
Approx. 756 mm×292 mm×408 mm
For Vertical setting
Dimensions (W×H×D)
Approx. 288 mm×756 mm×410 mm
Mass Approx. 14.4 kg
Operating temperature range 0 °C to +40 °C
Operating humidity range
20 % to 80 % RH (no condensation)

■ AMPLIFIER SECTION

RMS Output Power
Total RMS output power (1channel drive) 550 W

■ USB SECTION

USB Standard	USB 2.0 full speed
Media file format support	MP3 (∗.mp3)
USB device file system	FAT12, FAT16, FAT32
Playable USB storage	USB Thumbdrives
USB port power	max 1 A
Sampling frequency	32 kHz, 44.1 kHz, 48 kHz
Bit rate	32 kbps to 320 kbps
Audio output	2 ch

■ TERMINAL SECTION

AUX
Jack Type Stereo, 3.5 mm
Audio Output
Jack Type Stereo, 3.5 mm

■ BLUETOOTH SECTION

Bluetooth system specification	Bluetooth® Ver. 3.0
Wireless equipment classification	Class 2 (2.5 mW)
Supported Profiles	A2DP, AVRCP
Supported codec	SBC
Frequency band	2.4 GHz band FH-SS
Operating distance	Approx. 10 m Line of sight

■ SPEAKER SECTION

Speaker (L/R)
Type 2 way 2 speaker system (Bass reflex type)
Woofer Unit(s) 2 speakers
Size(Type) 20 cm (Cone type)
Tweeter Unit(s) 2 speakers
Size(Type) 5 cm (Cone type)

- Specifications are subject to change without notice.
- Mass and dimensions are approximate.
- Total harmonic distortion is measured by a digital spectrum analyzer.

PI_30000884

5 Location of Controls and Components

Remote control

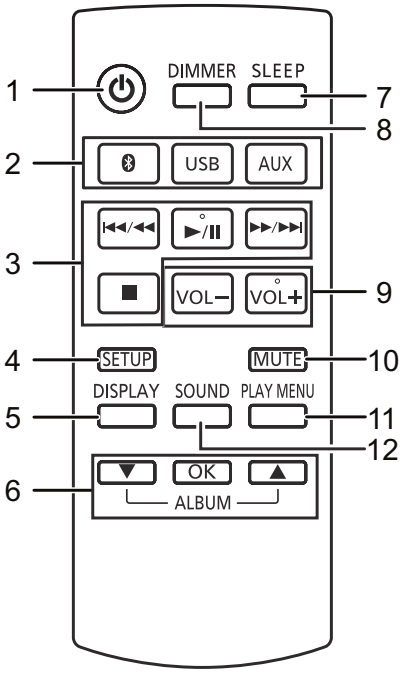

The unit (Front view)

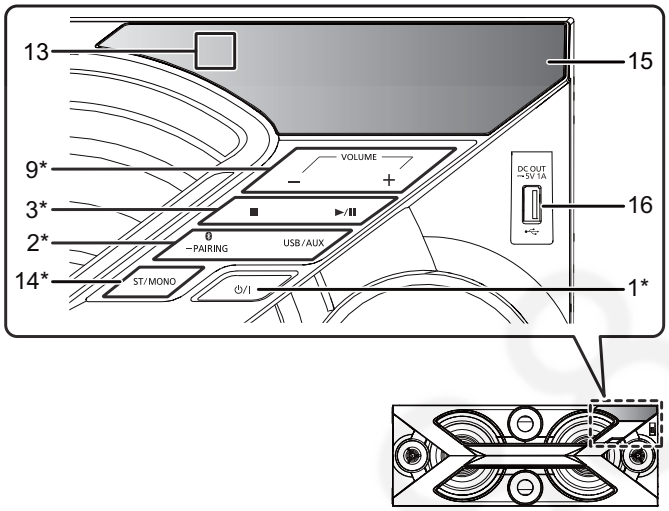

1 **Standby/on switch [⏻], [⏻/I]**
Press to switch the unit from on to standby mode or vice versa. In standby mode, the unit is still consuming a small amount of power.

2 Select the audio source
On the unit:
To start Bluetooth® pairing, press and hold [-PAIRING] when you are in Bluetooth®
(See “Connecting via Bluetooth® menu”)

3 Basic playback control buttons

4 Enter setup menu

5 Change the displayed information

6 Selection/OK

7 Set the sleep timer

8 Dim the display panel
Press again to cancel.

9 Adjust the volume (0 (min) to 50 (max))

10 Mute the sound
Press again to cancel. “MUTE” is also cancelled when the volume is adjusted or the unit is turned off.

11 Set the play menu item

12 Enter sound menu

13 Remote control signal sensor
For both horizontal and vertical layouts:
Distance: Within approx. 7 m directly in front
Angle: Approximately 20° up and down, 30° left and right

14 Switch the sound to stereo or monaural

15 Display panel

16 USB terminal

* These switches work just by touching the marks.

PI_3000084

Connecting the AC mains lead

Turn off all equipment before connection and read the appropriate operating instructions.

Connect the AC mains lead.

Rear view

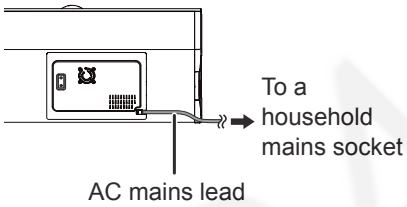

- **Conserving power**
  This unit consumes a small amount of power (See “Specifications”) even in standby mode. In the interest of power conservation, if you will not be using this unit for a long time, unplug it from the household mains socket. Since some settings will be lost when this unit is unplugged, you will need to apply them again next time you use it.

Connecting a USB device

Preparation
Before you connect a USB device to this unit, make sure you do a backup of the data.

Decrease the volume and connect the USB device to the USB terminal.

Hold this unit when connecting or disconnecting the USB device.

Front view

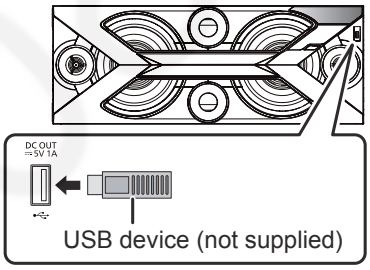

- Do not use a USB extension cable.
  This unit cannot recognise USB device connected through a cable.

Charging a device

Charging starts when a device (rated value: 5 V/1 A) is connected to the USB terminal of this unit.

- Although some devices can be charged when this unit is in USB mode, it is recommend to charge such devices when this unit is in Bluetooth® mode or AUX mode.
- When charging a device for more than approximately 20 minutes, set the Auto off function to "OFF". (See “Auto off function”)

Preparation
Turn the unit on.

Connect a device.

Confirm from the screen of the connected device, etc. to make sure charging has started.

Front view

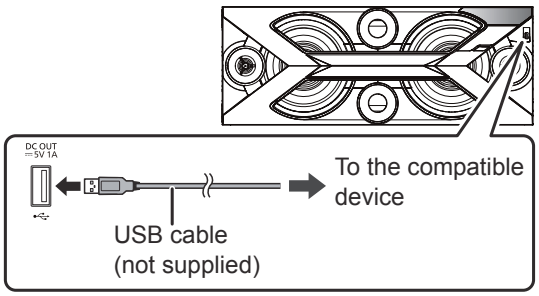

- A cable compatible with your device is required. Use the cable that comes with your device.
- Even if you connect a cable compatible with the USB terminal of this unit, your device may not be charged. In that case, use the charger that comes with the device.
- Depending on your device, using other chargers may not work. Check the operating instructions of your device before use.
- If your device cannot be charged when this unit is in USB mode, charge the device when this unit is in Bluetooth® mode or AUX mode.
- Do not connect a device with a rated value higher than 5 V/1 A to this unit.
- To check if charging is complete, look at the screen of the connected device, etc.
- Once fully charged, remove the USB cable from the USB terminal.

PL3000884

Bluetooth® connection

You can listen to the sound from the Bluetooth® audio device from this unit wirelessly.

- Refer to the operating instructions of the Bluetooth® device for details.

Connecting via Bluetooth® menu

Preparation

- Turn on the Bluetooth® feature of the device and place the device near this unit.

■ Pairing with Bluetooth® devices

1 Press [ᛒ] to select "BLUETOOTH".

- If "PAIRING" is indicated on the display, go to step 4.

To enter pairing mode*

2 Press [PLAY MENU] to select "PAIRING".

3 Press [▲, ▼] to select "OK? YES" and then press [OK].

* You can also enter pairing mode by pressing and holding [ᛒ -PAIRING] on the unit.

To pair with a device

4 Select "SC-BMAX3" from the Bluetooth® device's Bluetooth® menu.

5 Start playback on the Bluetooth® device.

■ Connecting a paired Bluetooth® device

1 Press [ᛒ] to select "BLUETOOTH".

- "READY" is indicated on the display.
- When "BLUETOOTH" is selected as the source, this unit will automatically try and connect to the last connected Bluetooth® device.

2 Select "SC-BMAX3" from the Bluetooth® device's Bluetooth® menu.

3 Start playback on the Bluetooth® device.

- If prompted for the passkey, input "0000".
- You can register up to 8 devices with this unit. If a 9th device is paired, the device that has not been used the longest will be replaced.
- This unit can only be connected to one device at a time.

Disconnecting a Bluetooth® device

1 While a Bluetooth® device is connected:
Press [PLAY MENU] repeatedly to select "DISCONNECT?".

2 Press [▲, ▼] to select "OK? YES" and then press [OK].

- You can also disconnect the Bluetooth® device by pressing and holding [ᛒ -PAIRING] on the unit.
- The Bluetooth® device will be disconnected if a different audio source (e.g., "USB") is selected.

PNP0008084

Connecting an external device

Preparation
Turn the unit on.

1 Connect an external device using an audio cable (not supplied).
- Plug type: ∅ 3.5 mm stereo

2 Press [AUX] to select “AUX” and start playback on the connected device.

Rear view

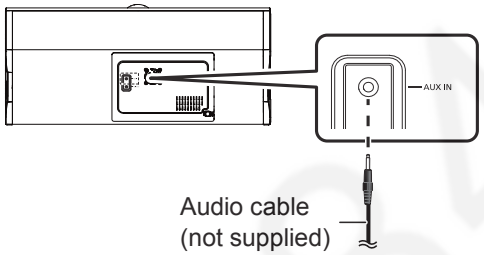

■ To select the sound input level of the external device

1 While in AUX mode, press [PLAY MENU] repeatedly to select “INPUT LEVEL”.

2 Press [▲, ▼] to select “NORMAL” or “HIGH” and then press [OK].

- The factory default is “NORMAL”.
- To improve sound distortion when “HIGH” is selected, select “NORMAL”.
- Switch the equalizer off or turn the volume of the external device down to reduce the input signal. High level of input signal will distort the sound.
- For details, refer to the operating instructions of the device.

Connecting additional SC-BMAX3 units

You can connect to play sound from this unit to the additional SC-BMAX3 units.
- It is recommended to install all SC-BMAX3 units vertically.

Preparation
1 Set the sound input level of additional SC-BMAX3 units to “NORMAL”.
(See “To select the sound input level of the external device”)
2 Turn all the SC-BMAX3 units off.

1 Connect this unit and all the additional SC-BMAX3 units with audio cables (not supplied).
- Plug type: ∅ 3.5 mm stereo

2 Turn all the SC-BMAX3 units on.

3 On the additional SC-BMAX3 units: Press [AUX] to select “AUX”.
- For all the SC-BMAX3 units:
It is recommended to select the “MONO” sound effect. (See “Sound effects”)

4 On this unit: Start your desired playback.

Rear view

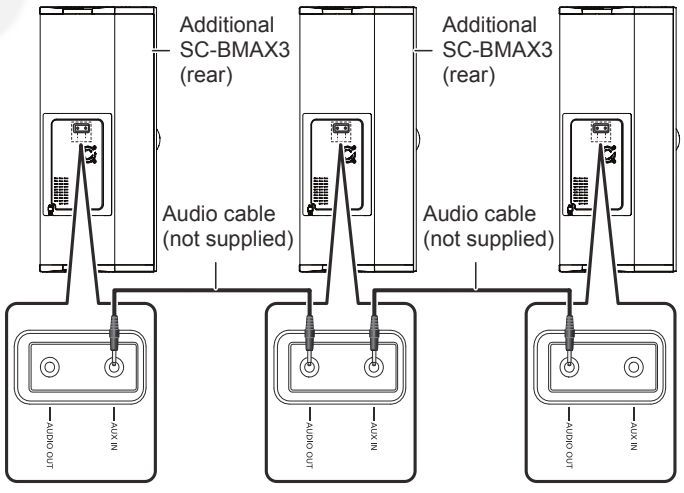

- You can connect this unit and up to two SC-BMAX3 units.
- The sound effect will be controlled separately by each unit. Make the same sound settings on the additional units if necessary.
- The illumination lights of the SC-BMAX3 units may flash at slightly different times.

RQQ0084

6 Service Mode

This unit has self-diagnosis function mode that provides errors information for service personnel.

6.1. How to Enter Self-Diagnosis Function mode

To enter the self-diagnosis function mode, follow below steps.

1. Turn the unit on.
2. In AUX source.

To exit the self-diagnosis function mode, turn the unit off.

6.2. Self-Diagnosis Function

Mode name	Key operation	VFD Display	Function
Test Mode 1	Press[■] on the unit and [USB] on the remote control simultaneously for 5 seconds.	[T1_ _ _ _FLA]	Enter NO DRC and only the frequency curve mode.
Test Mode 2	Press[■]on the unit and[DISPLAY] on the remote control simultaneously for 5 seconds.	[T2_ LED_ XX]	Enter LED test mode. The min level is 0, the max level is 10.
Test Mode 3	Press[■]on the unit and [SLEEP] on the remote control simultaneously for 5 seconds.	[T3_XX:XX:XX]	Enter Clock test mode. VFD will display the clock.
Test Mode 4	Press[■]on the unit and [SOUND] on the remote control simultaneously for 5 seconds.	[T4 LOUDNESS ON] [T4 LOUDNESS OFF]	Enter Loudness function on or off control function. In this mode: VFD display [T4 LOUDNESS ON] the function of loudness is on. VFD display [T4 LOUDNESS OFF] the function of loudness is off.
Test Mode 5	Press[■]on the unit and [DIMMER] on the remote control simultaneously for 5 seconds.	[88888:88:88]	Enter VFD test mode. In this mode all VFD segment is bright.
Test Mode 6	Press[■] on the unit and [PLAYMENU] on the remote control simultaneously for 5 seconds.	[X_XXX-XXX] ❶ ❷ ❸	❶ :Touch key threshold.: ❷ :Key number 1:VOL- 2:VOL+ 3: STOP 4:PLAY/PAUSE 5:PAIRING 6:USB/AUX 7:ST/MONO 8:ON/OFF ❸ :Touch key Increment counter when key press the value is change.
Test Mode 7	Press[■]on the unit and [USB] on the remote control simultaneously for 5 seconds.re do once again above steps it can enter TEST MODE 7.	[T7_ SAFETY]	Enter no DRC and no frequency curve.
Test Mode 8	Press[■]on the unit and [DIMMER] on the remote control simultaneously for 5 seconds enter TEST MODE 5,at this time all VFD segment is bright, press [■] on the remote control, it will enter this TEST MODE 8.	[XXX-XXX]	This mode is use to detect the ad value the APD. Three digits on the left side is the max value, three digits on right side is the min value.

NOTE:
The unsupported character is displayed as "_" in this table ,real display on the unit is " ".

6.3. Service Mode

To enter the service mode.

1.Turn the unit on.

2. At any source, set VOL level equal 0, hold the [VOL-] on the main unit, then press [MUTE] [VOL+] on the remote control, software version will appear. At this time, press [DISPLAY] on the remote control, it will enter the service mode.

VFD Display	Function Description
[USB OVER CURRENT]	USB port is over current
[F_TEMP]	AMP is over temperature
[F_CURRENT]	AMP is over load
[F_PROTECT]	One of the speaker pin is short circuit 3 seconds
[NO_ERROR]	EEPROM is empty or the current address on EEPROM is no exception happen

To exit service mode, turn the unit off.

NOTE:

If needed display scrolls automatically to show the characters completely.

Error information Save and search:

1.Ten address space on EEPROM is used to save ten error information. Storage method is first in first out.

2.VFD display the error information when press [ALBUM UP] and [ALBUM DOWN] on the remote control.

3.When display arrives at the last record, it will return to the first EEPROM error record.

4.When no error occurs, “No error” appears on the display.

PI_300008084

7 Troubleshooting Guide

7.1. No power

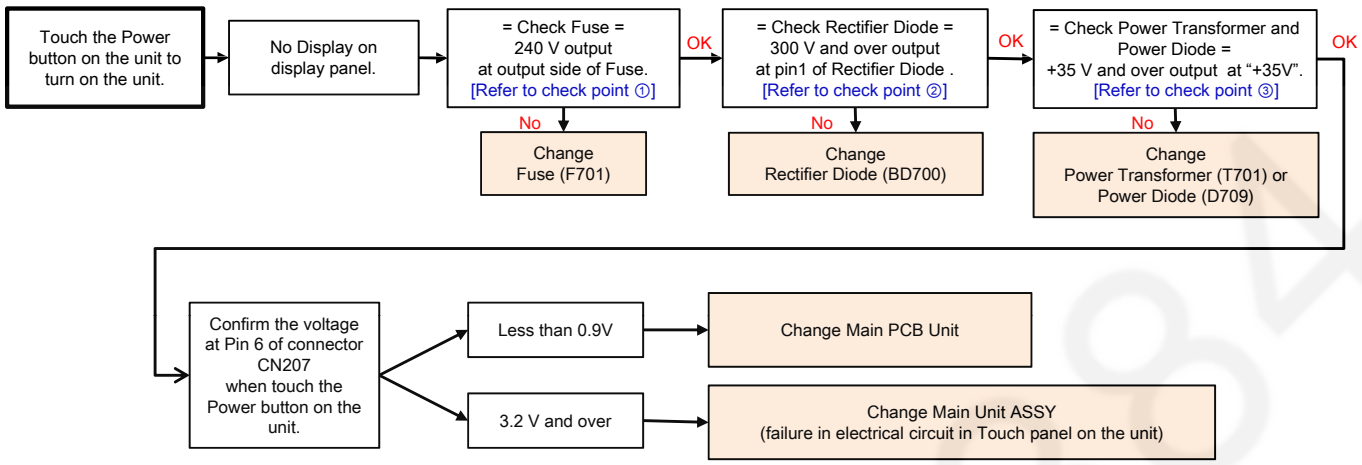

7.2. No Display on display panel

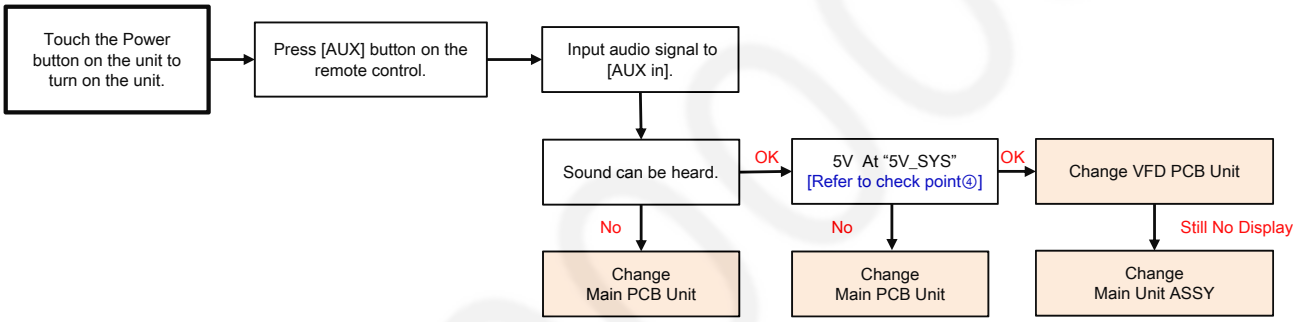

7.3. Bluetooth® Pairing failure

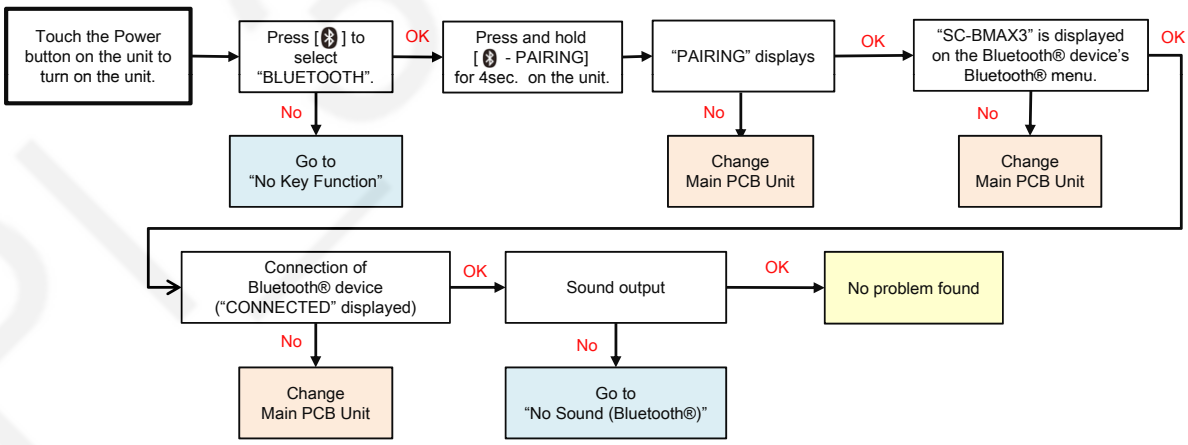

7.4. No Charging a Device

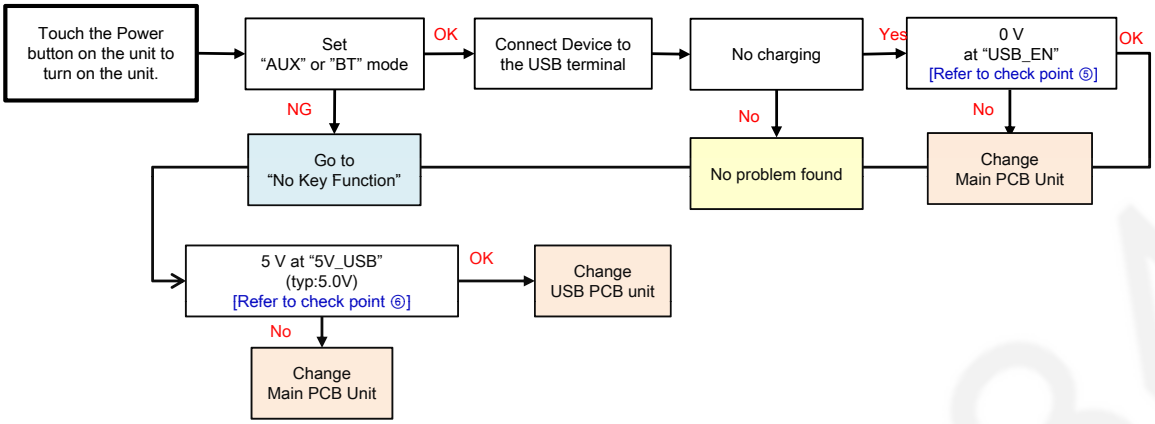

7.5. No Key Function

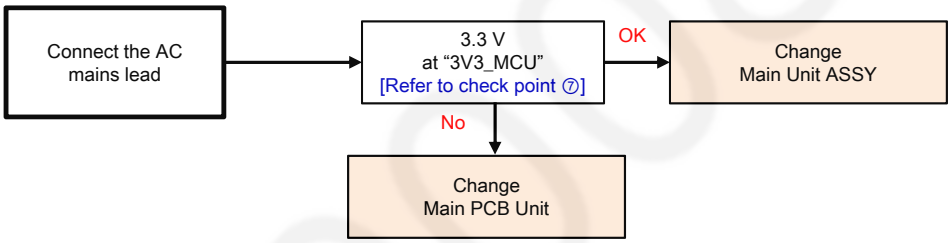

7.6. No remote control function

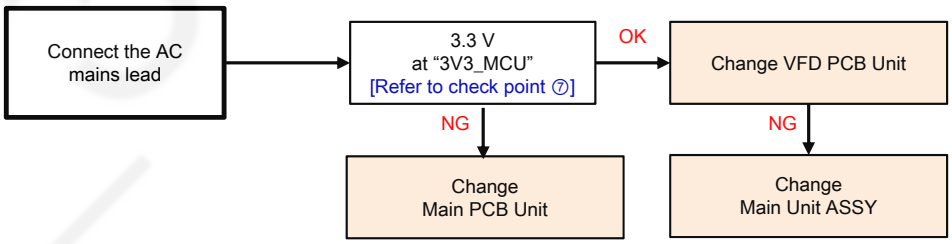

P1300884

7.7. No Sound

7.7.1. No Sound (Bluetooth®)

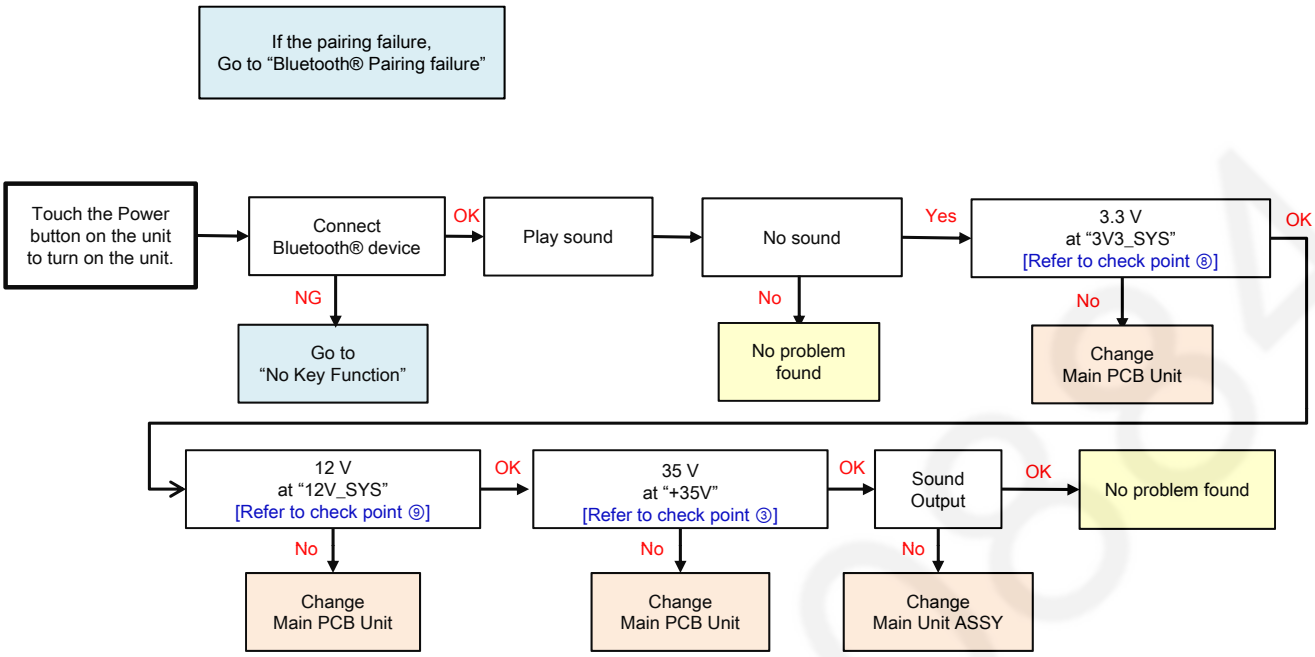

7.7.2. No Sound (USB Device)

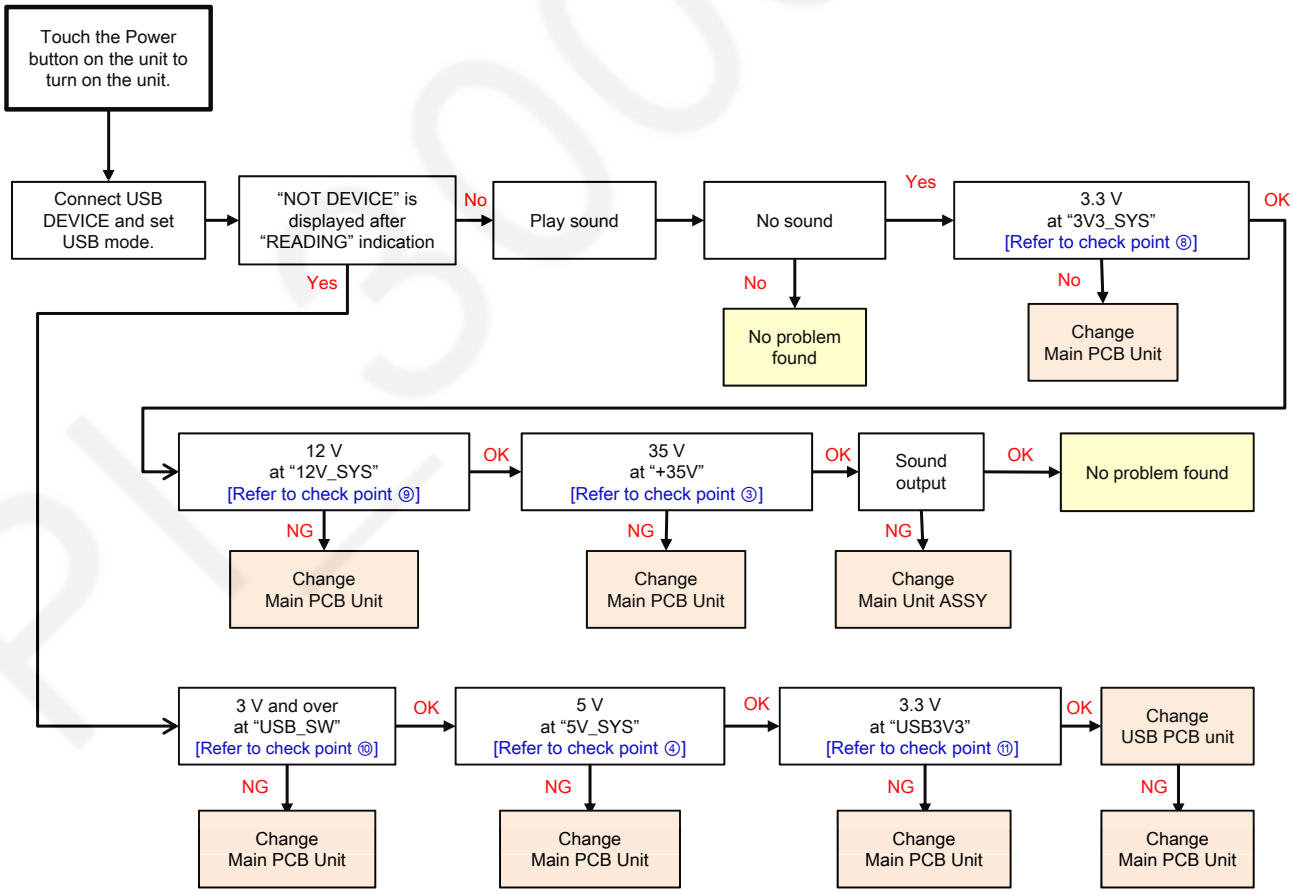

7.7.3. No Sound (AUX)

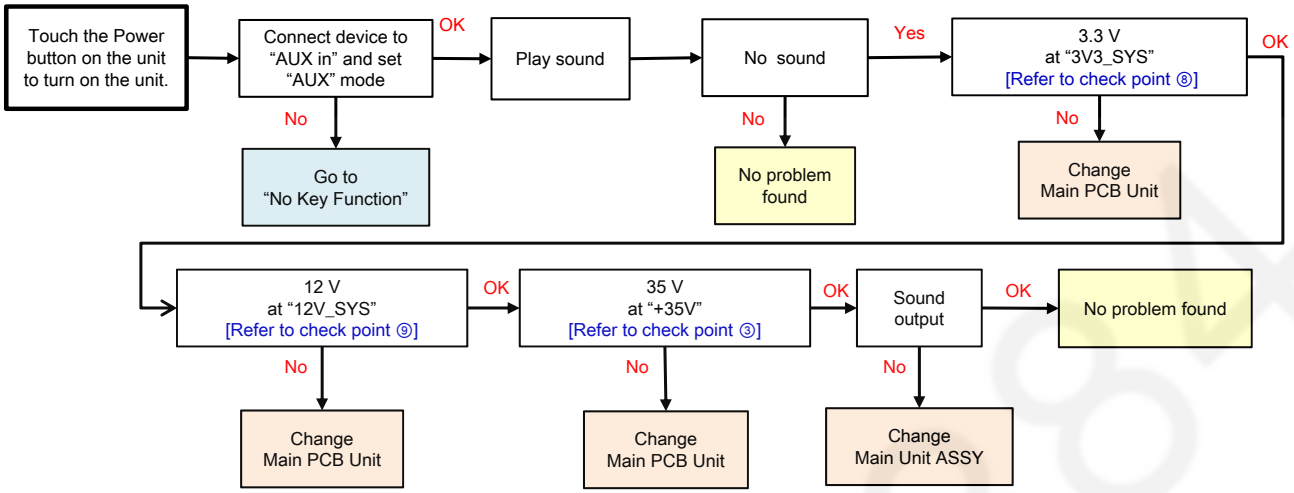

7.8. No signal from AUDIO OUT Terminal

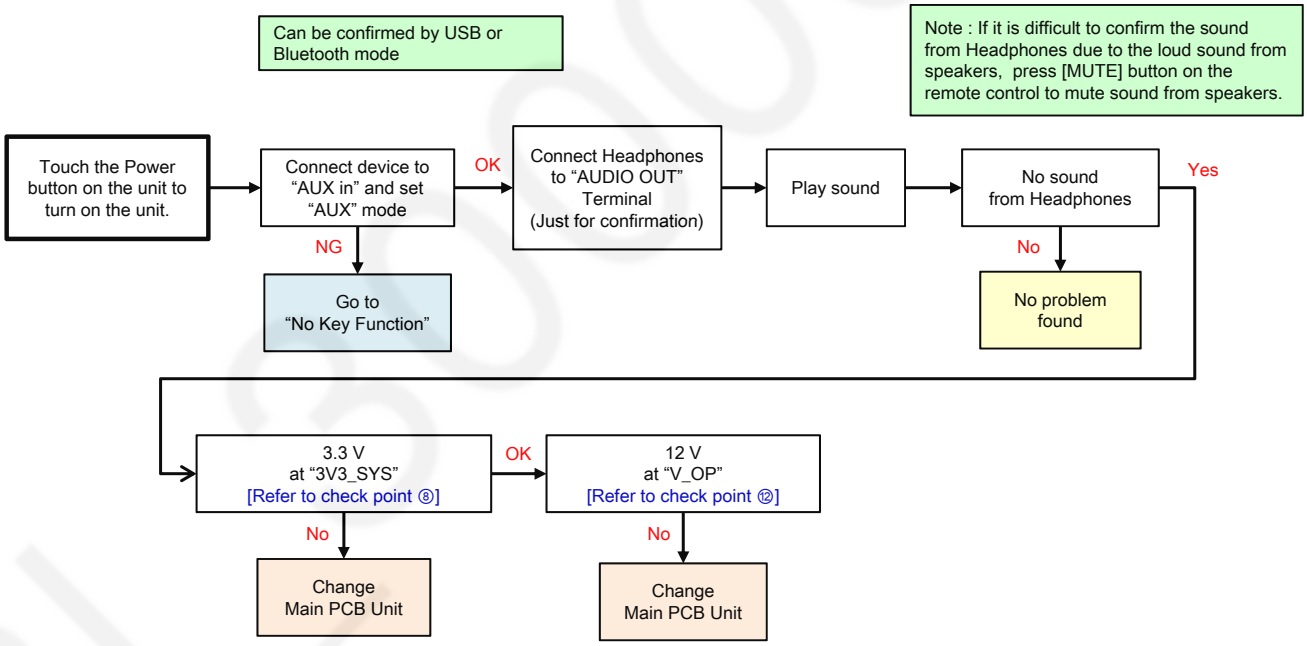

Note: This troubleshooting is for "No signal from AUDIO OUT Terminal" failure only and the sound output from speaker normally.

7.9. No Fan

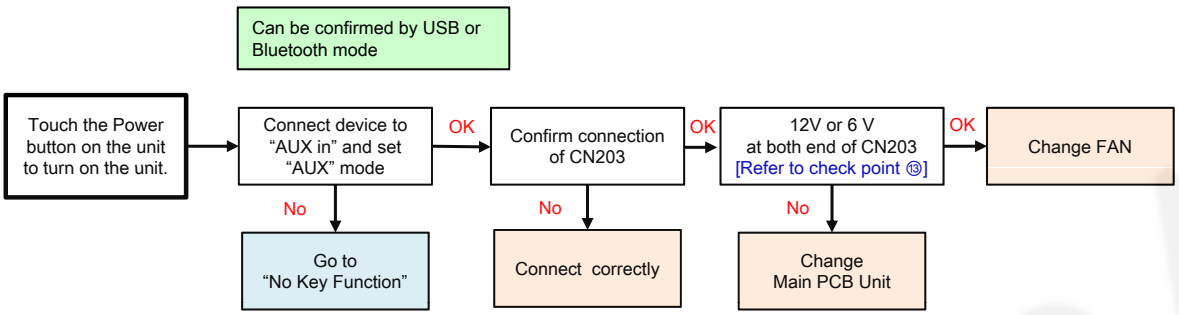

7.10. No illumination

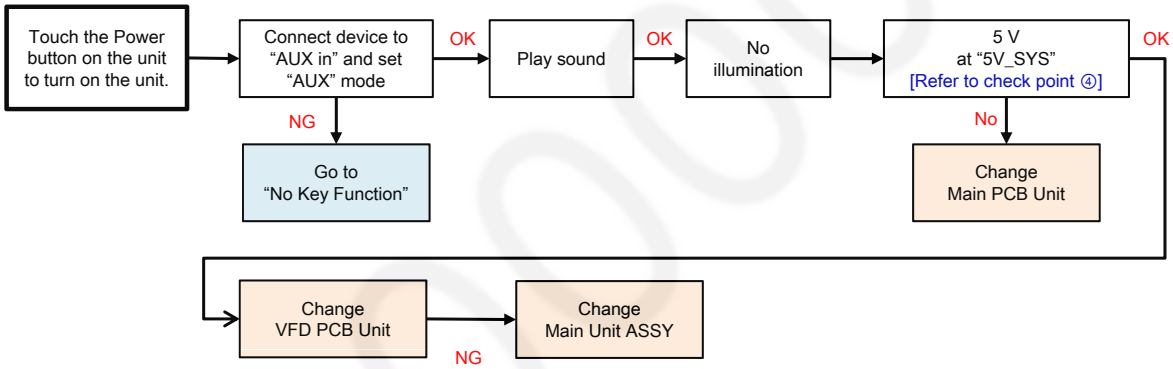

PI3000884

7.11. Check Points

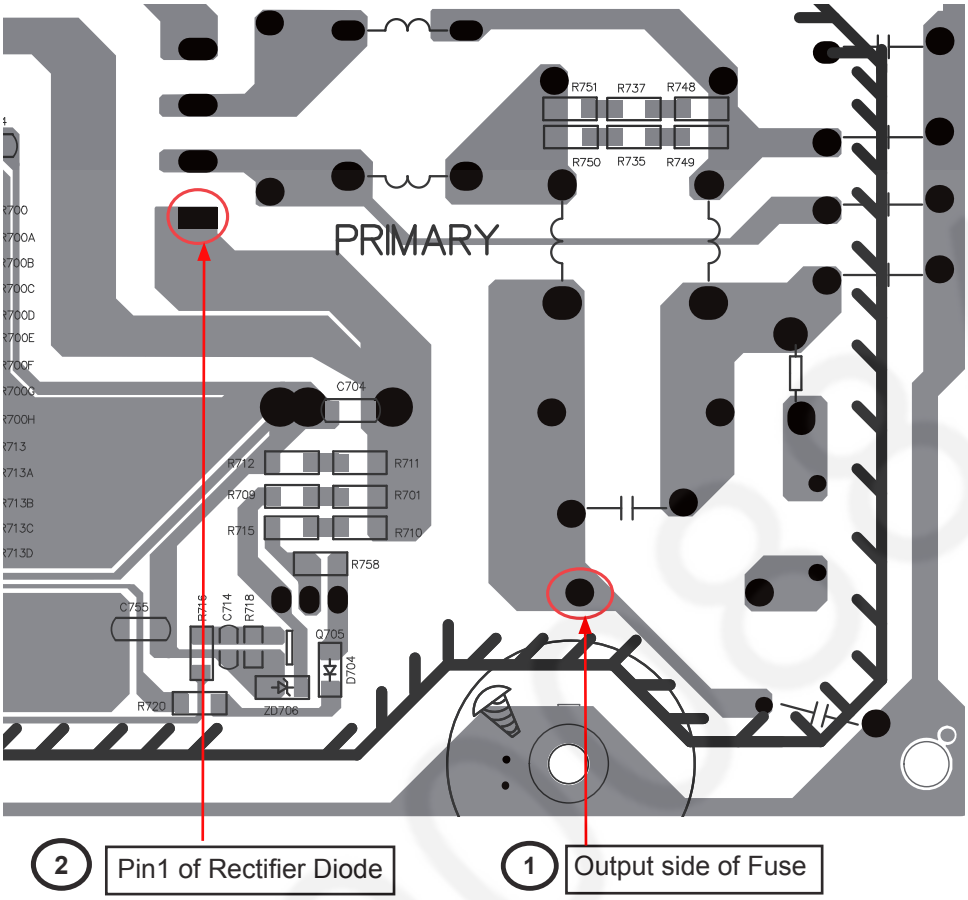

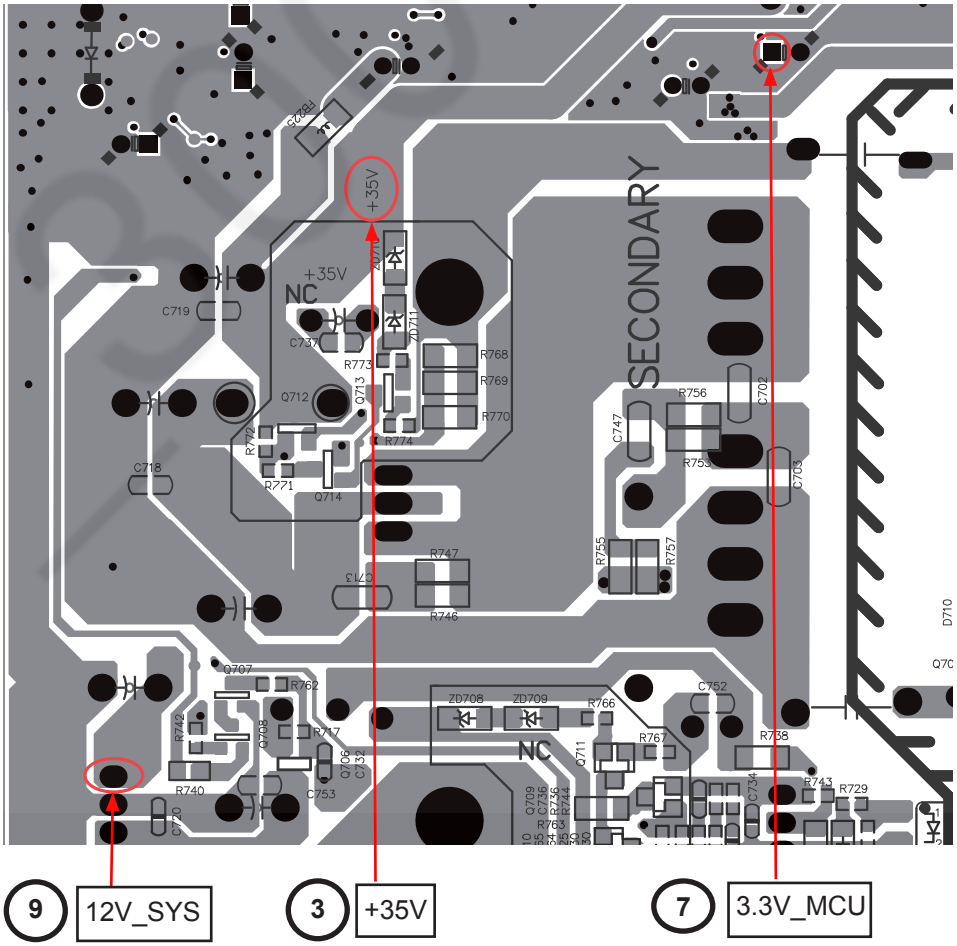

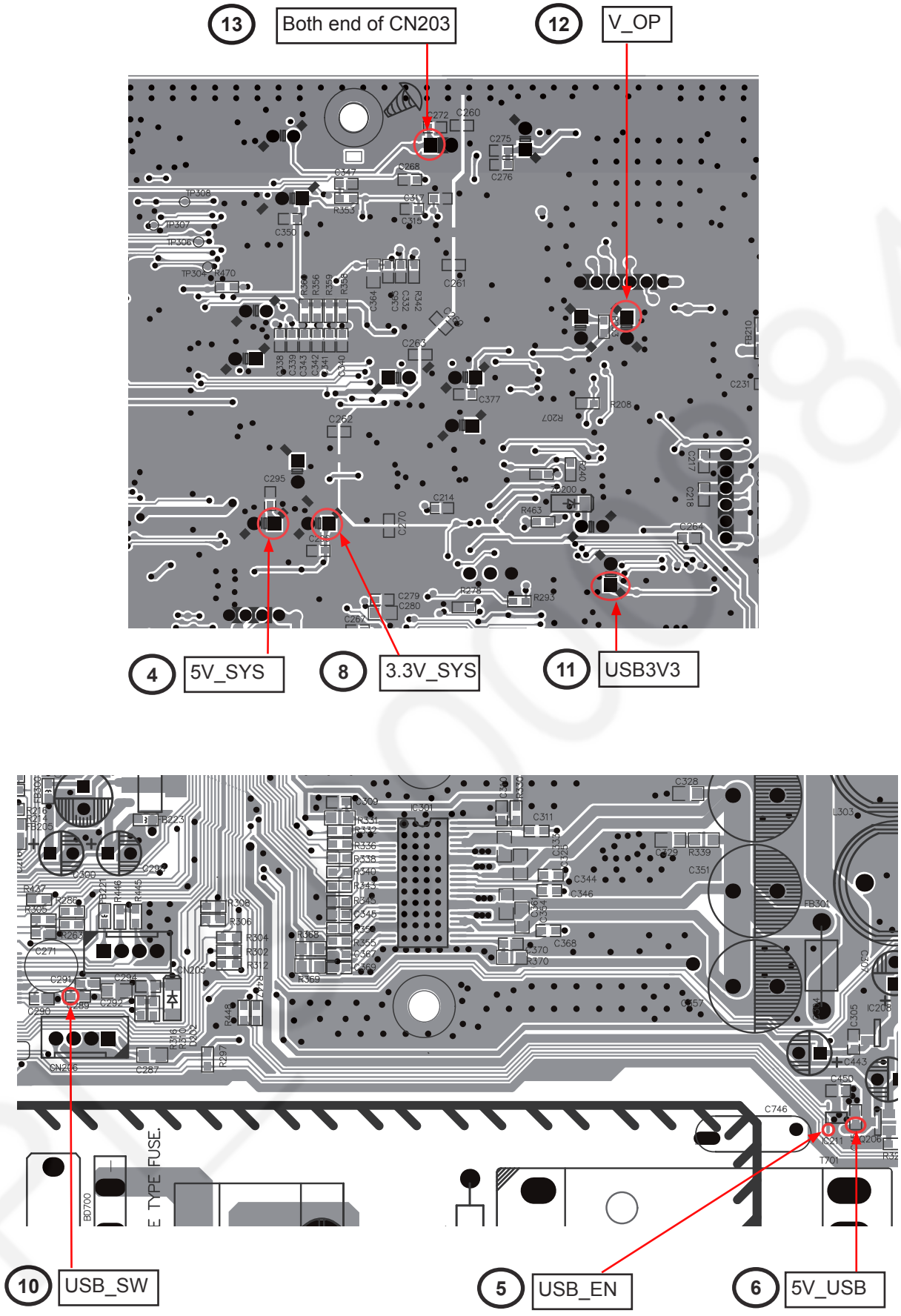
13
Both end of CN203
12
V_OP
4
5V_SYS
8
3.3V_SYS
11
USB3V3
10
USB_SW
5
USB_EN
6
5V_USB

8 Wiring Connection and Voltage Data

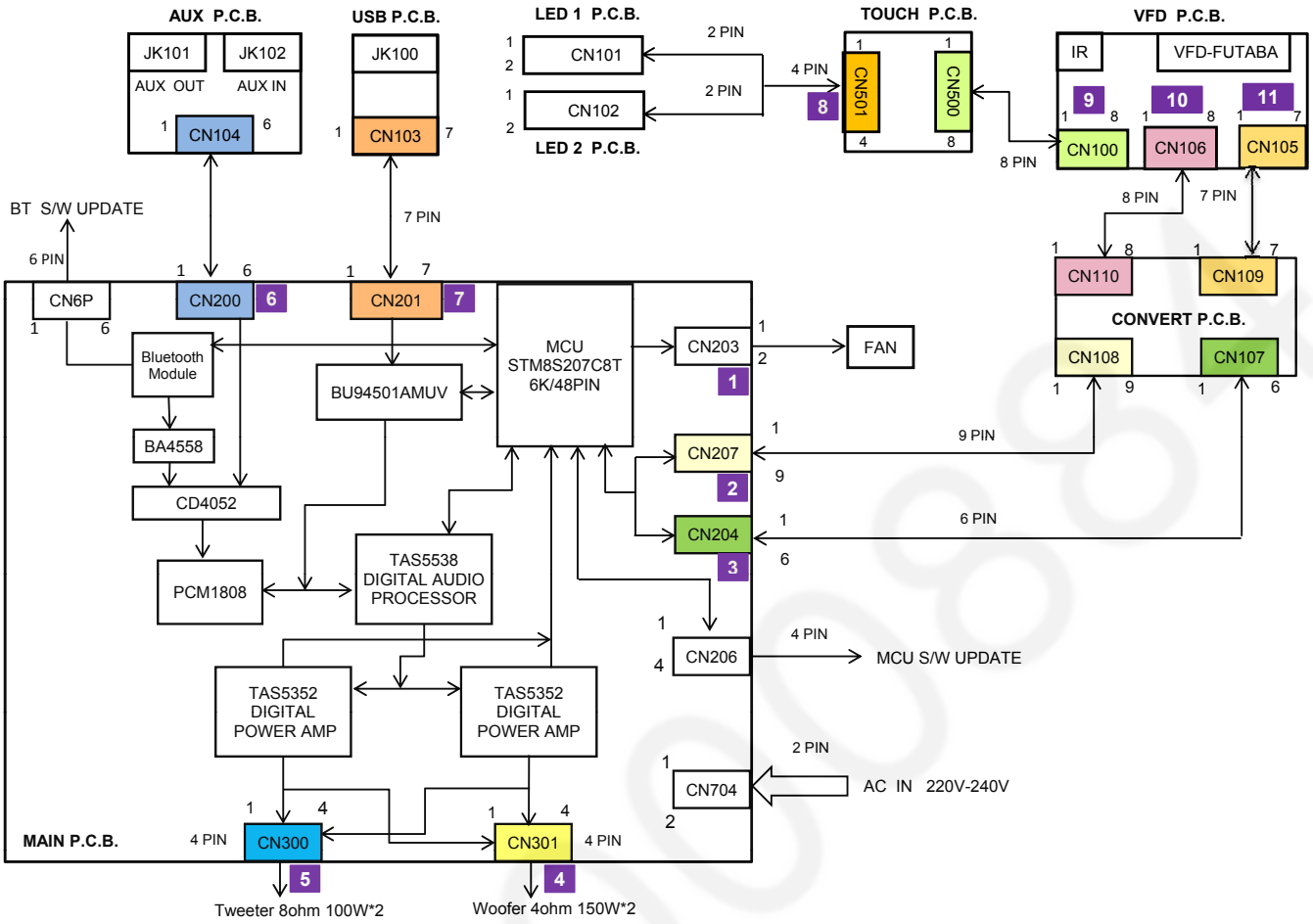

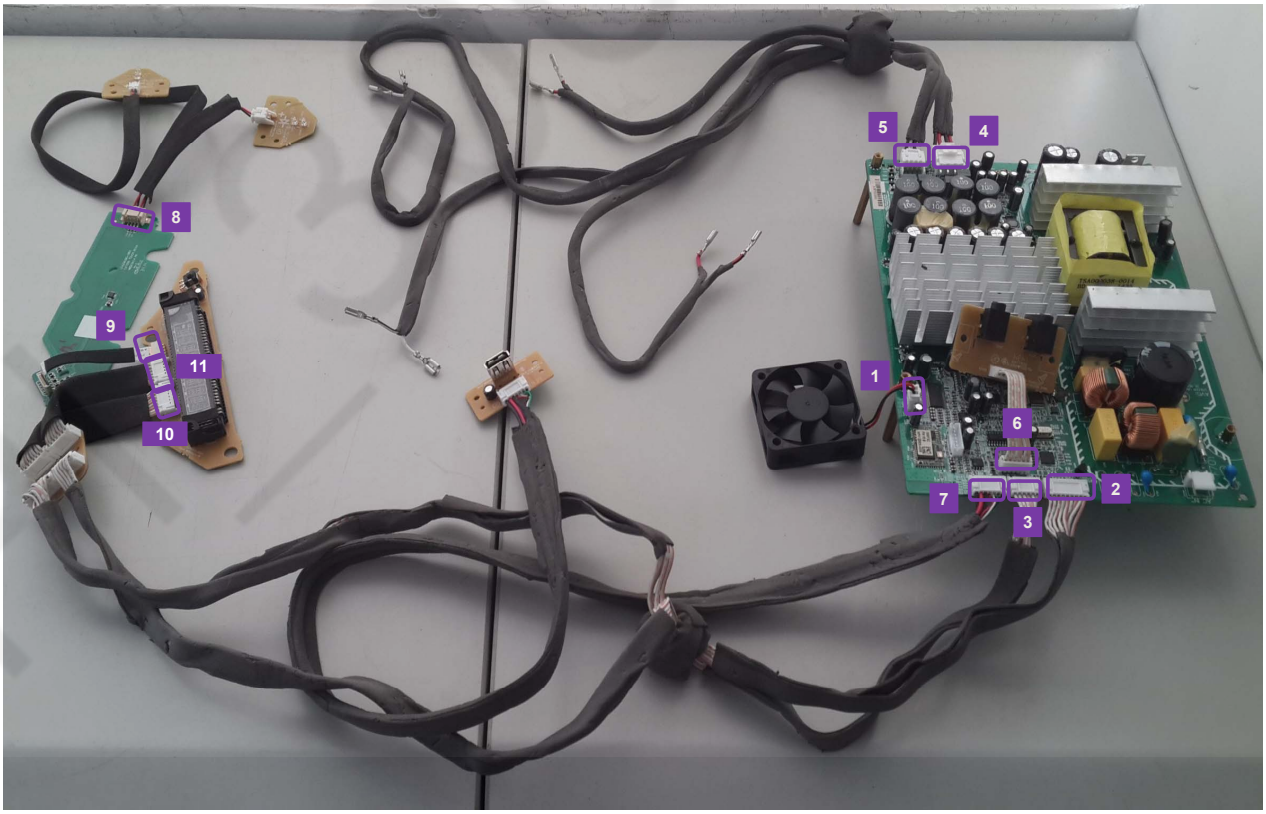

VOLTAGE DATA (measurement value)

1	PIN NO.	VALUE
CN203	1	0-12V
	2	0V

2	PIN NO.	VALUE
CN207	1	0V
	2	5.0V
	3	3.3V
	4	12.0V
	5	0.33V
	6	2.9V
	7	2.9V
	8	0-2.3V
	9	0-2.3V

3	PIN NO.	VALUE
CN204 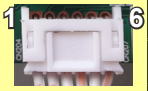	1	0V
	2	3.2V
	3	3.2V
	4	0V
	5	0V
	6	3.2V

4	PIN NO.	VALUE
CN301 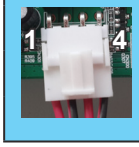	1	17.5V
	2	17.5V
	3	17.5V
	4	17.5V

5	PIN NO.	VALUE
CN300 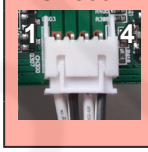	1	17.5V
	2	17.5V
	3	17.5V
	4	17.5V

6	PIN NO.	VALUE
CN200	1	0V
	2	0V
	3	0V
	4	0V
	5	0V
	6	0V

7	PIN NO.	VALUE
CN201	1	0V
	2	3.2V
	3	0V
	4	5.1V
	5	0V
	6	5.1V
	7	0V

8	PIN NO.	VALUE
CN501 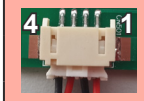	1	5.0V
	2	0-2.3V
	3	5.0V
	4	0-2.3V

9	PIN NO.	VALUE
CN100	1	0-2.3V
	2	0-2.3V
	3	2.9V
	4	3.3V
	5	2.9V
	6	2.9V
	7	3.2V
	8	0V

10	PIN NO.	VALUE
CN106	1	5.0V
	2	3.3V
	3	12.0V
	4	0.33V
	5	2.9V
	6	2.9V
	7	0-2.3V
	8	0-2.3V

11	PIN NO.	VALUE
CN105	1	0V
	2	0V
	3	3.2V
	4	3.2V
	5	0V
	6	3.2V
	7	0V

9 Disassembly and Assembly Instructions

9.1. Disassembly Flow Chart

The following chart is the procedure of disassembling the casing and inside parts for internal inspection when carrying out the servicing.
To assemble the unit, reverse the steps shown in the chart below.

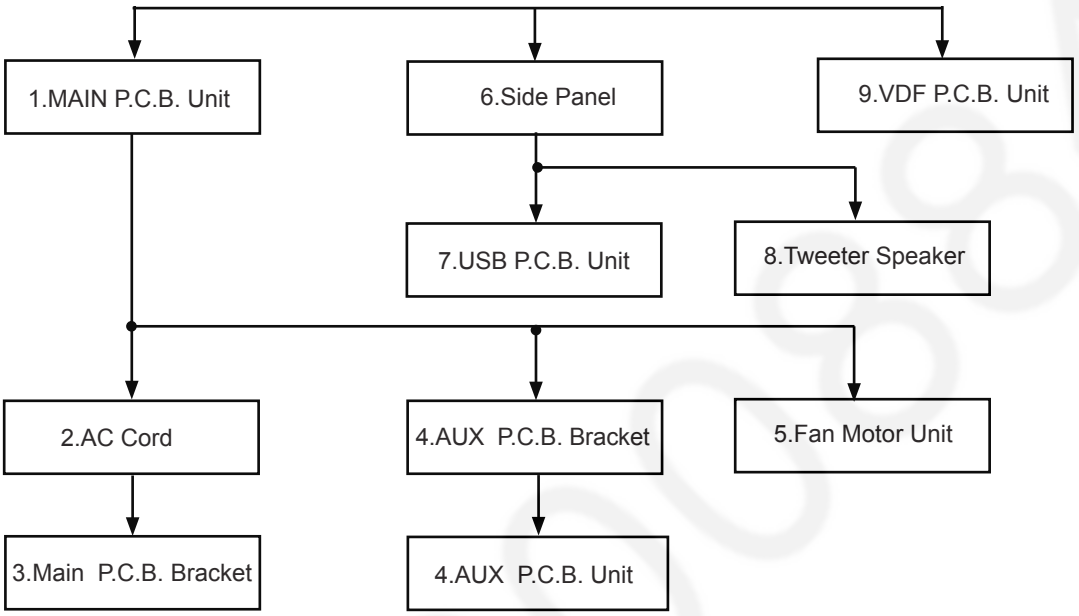

9.2. P.C.B. Positions

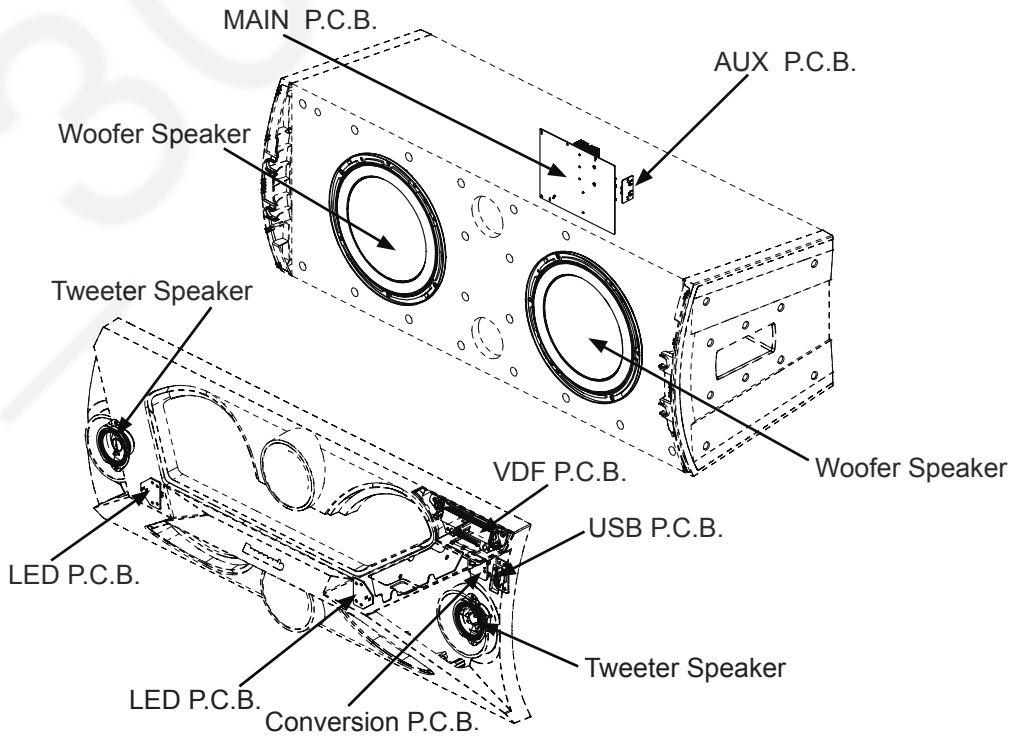

9.3. Disassembly Procedure

9.3.1. MAIN P.C.B. Unit

1. Remove 11 Screws (A).
2. Pull the Back Panel in the direction of arrow (1).
3. Cut the cable tie.
4. Disconnect 5 connectors (A) -(E).
5. Cut the cable tie.
6. Remove 6 Screws (B).
7. Disconnect connector (F) and connector (G).
8. Remove the MAIN P.C.B.Unit in the direction of arrow (2).

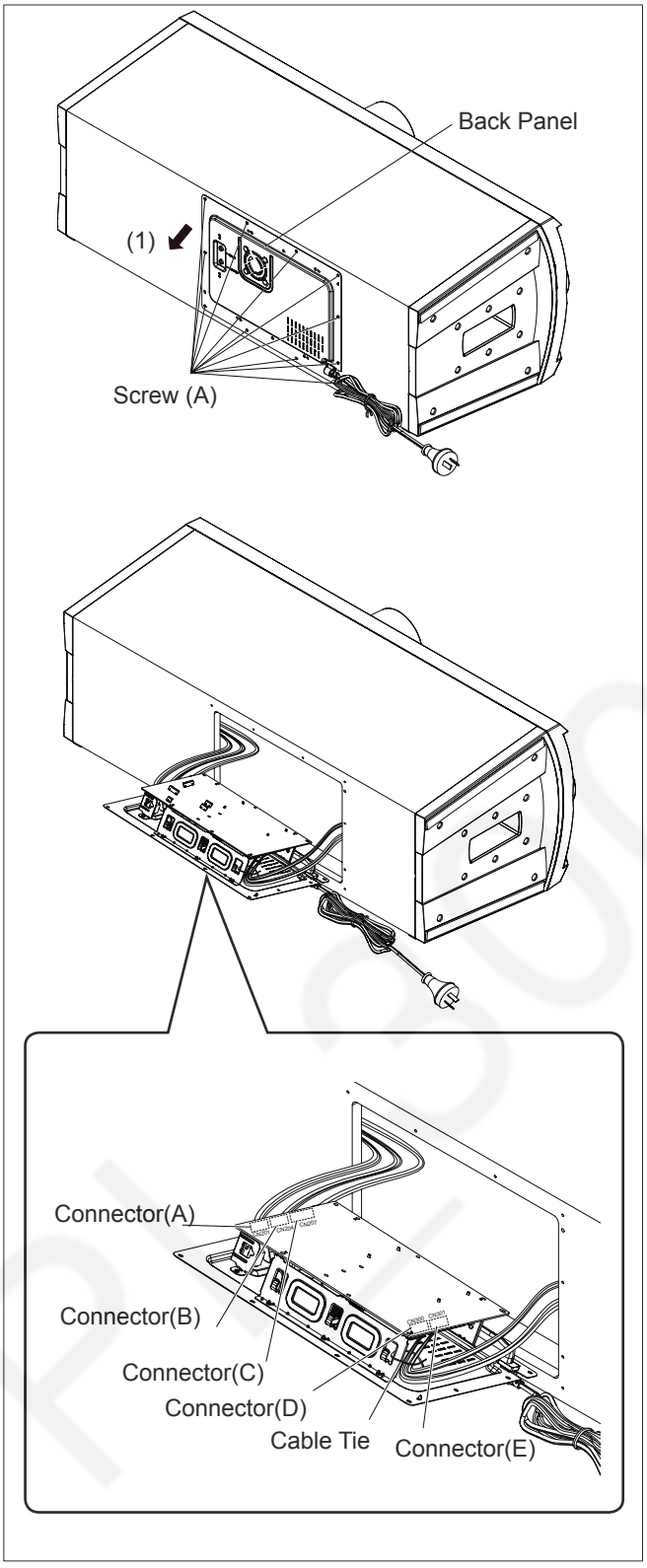

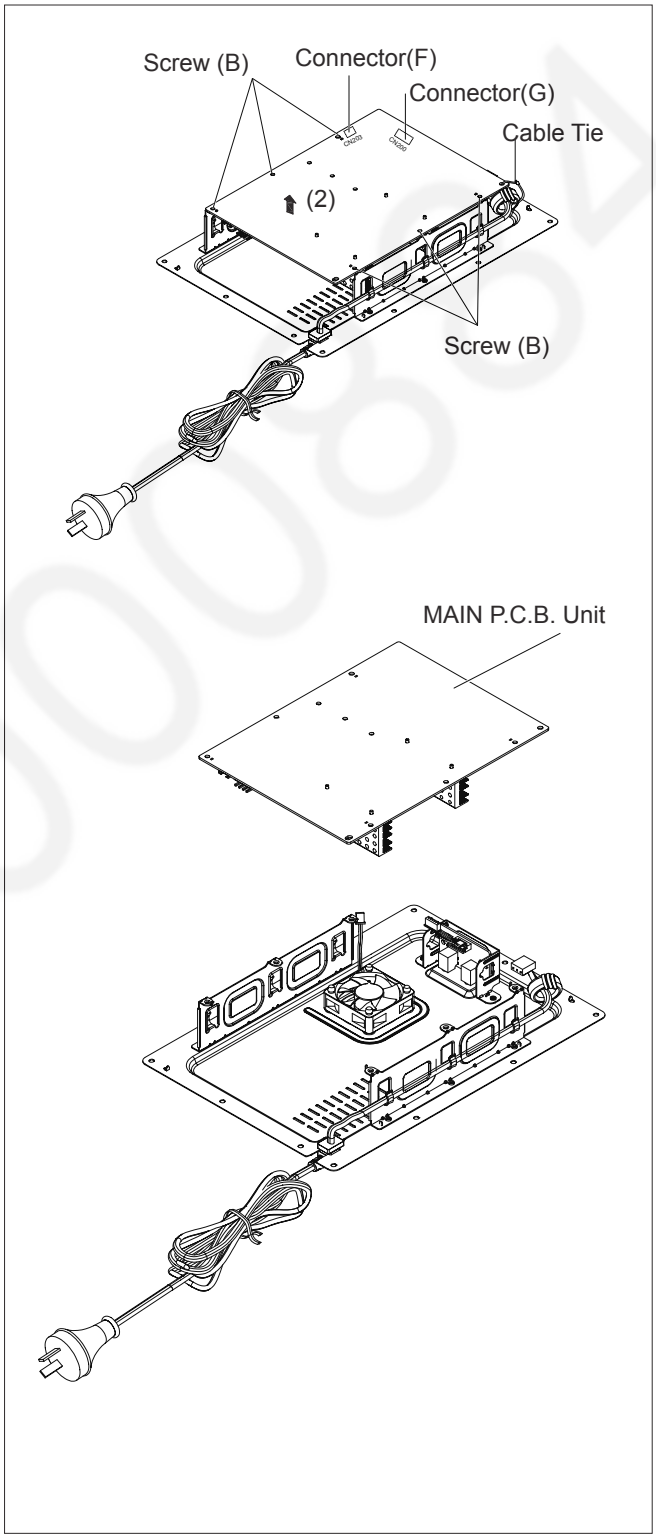

PL3000864

9.3.2. AC Cord

1. Detach the cord fixed at the hooking part.
2. Remove the AC Cord.

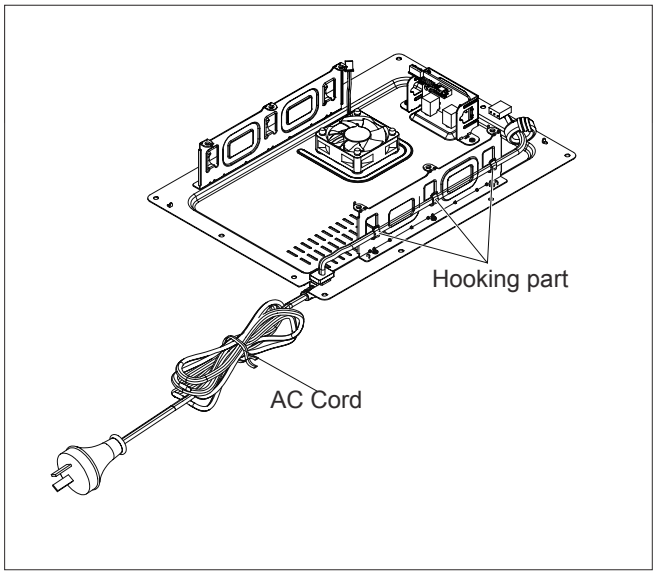

9.3.3. Main P.C.B. Bracket

1. Remove 6 Screws (A).
2. Remove 2 Main P.C.B. Brackets.

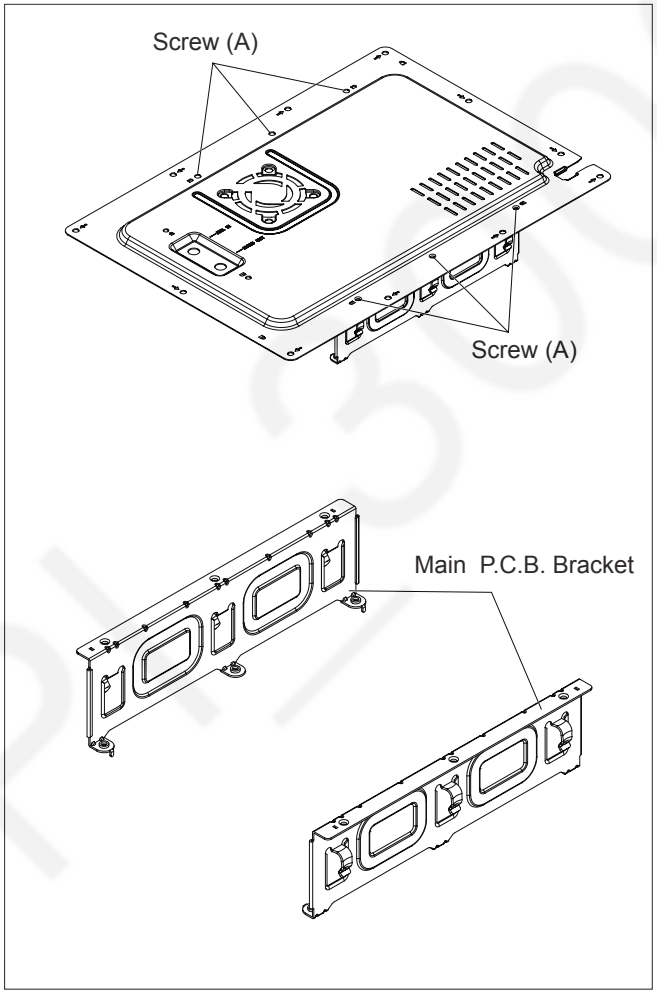

9.3.4. AUX P.C.B. Bracket and AUX P.C.B. Unit

1. Remove 2 Screws (A).
2. Remove 2 Screws (B).
3. Disconnect connector (A)
4. Remove AUX P.C.B. Bracket and AUX P.C.B. Unit.

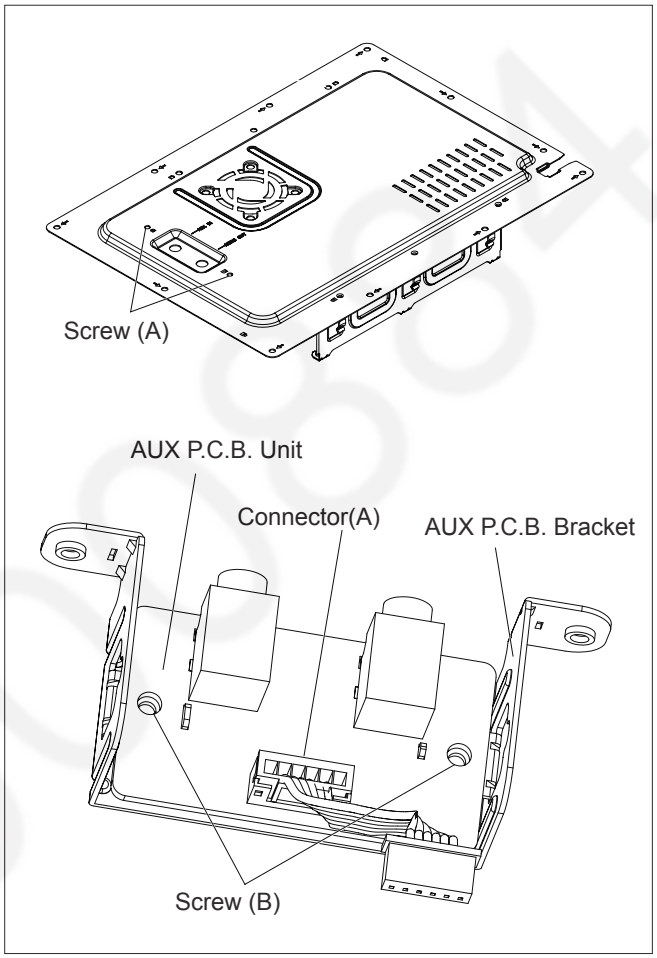

9.3.5. Fan Motor Unit

1. Cut 4 Silicon Bolts.
2. Remove the Fan Motor Unit.

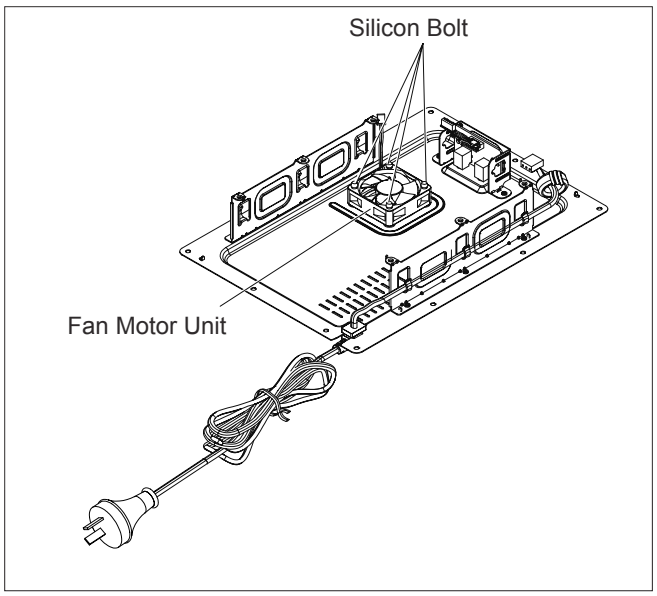

9.3.6. Side Panel

1. Remove 10 Screws (A).
2. Remove the Side Panel.
   (Remove the other Side Panel by the same method.)

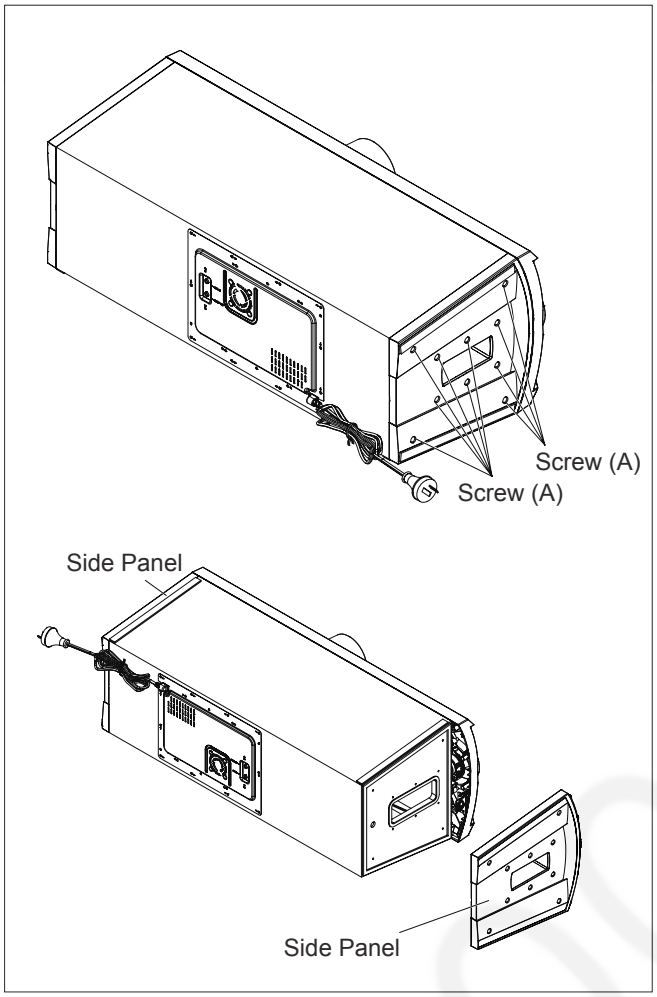

9.3.7. USB P.C.B. Unit

1. Remove 2 Screws (A).
2. Disconnect connector (A).
3. Remove the USB P.C.B..

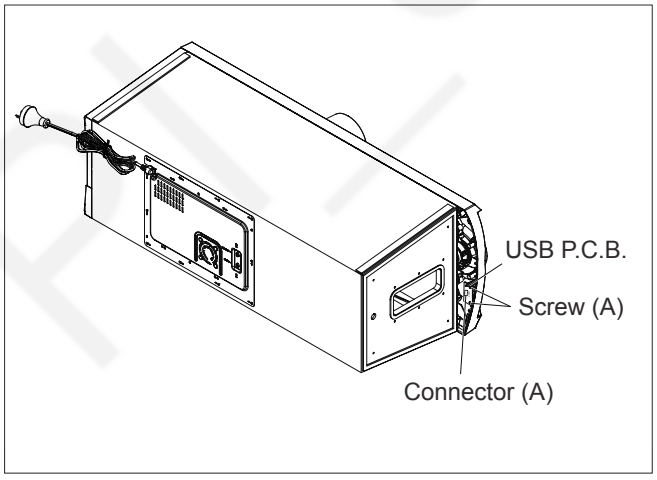

9.3.8. Tweeter Speaker

1. Disconnect 2 Speaker Cable Terminals.
2. Remove 2 Screws (A) by Offset Screwdriver.
3. Remove the Tweeter Speaker.
   (Remove other tweeter Speaker by the same method.)

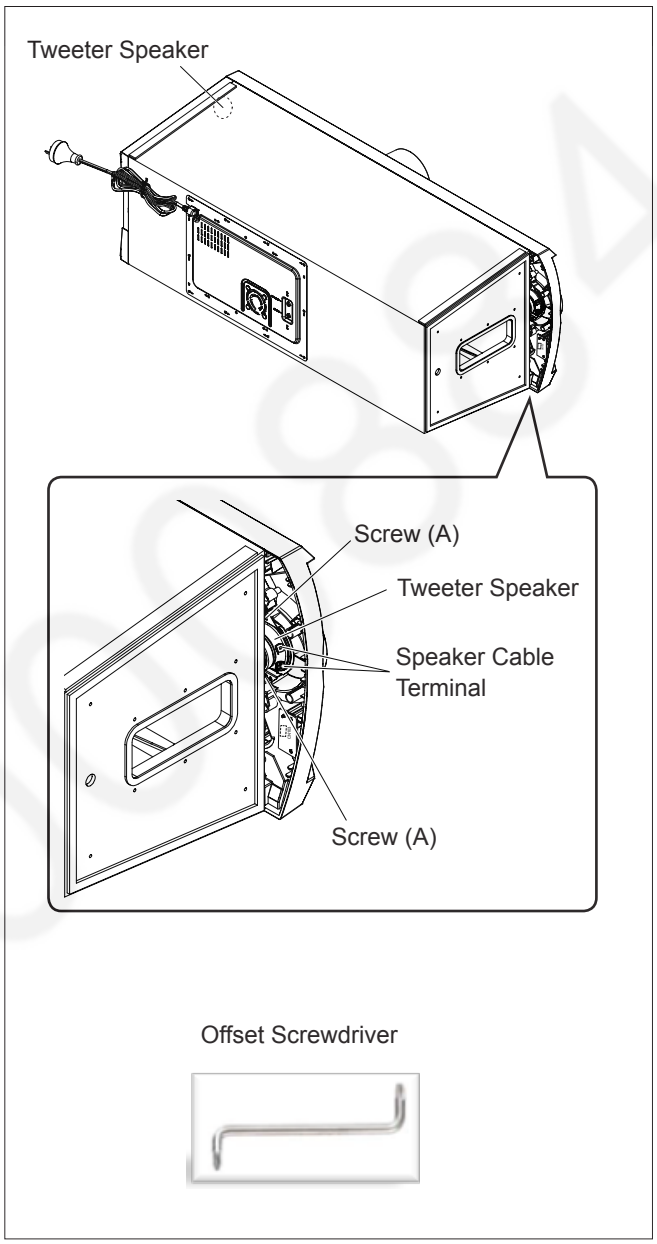

PI_30008864

9.3.9. VDF P.C.B. Unit

1. Pull out the Display Lens by thin brade driver in the direction of arrow (1).
2. Remove 4 Screws (A),then pull out the Display Bracket.
3. Disconnect the connector (A),(B) and FFC cable.
4. Pull out the VFD P.C.B. Unit.

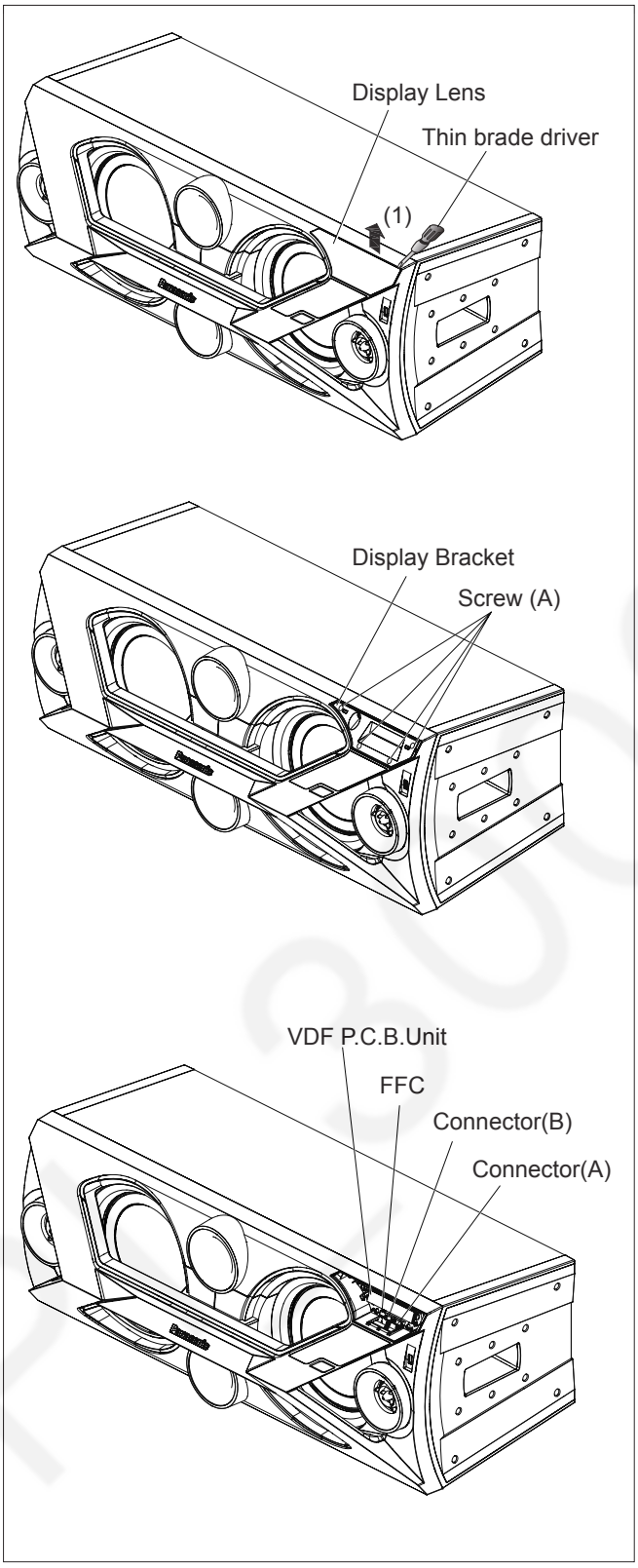

P1300884

10 Exploded View and Replacement Parts List

10.1. Casing Parts & Mechanism Section

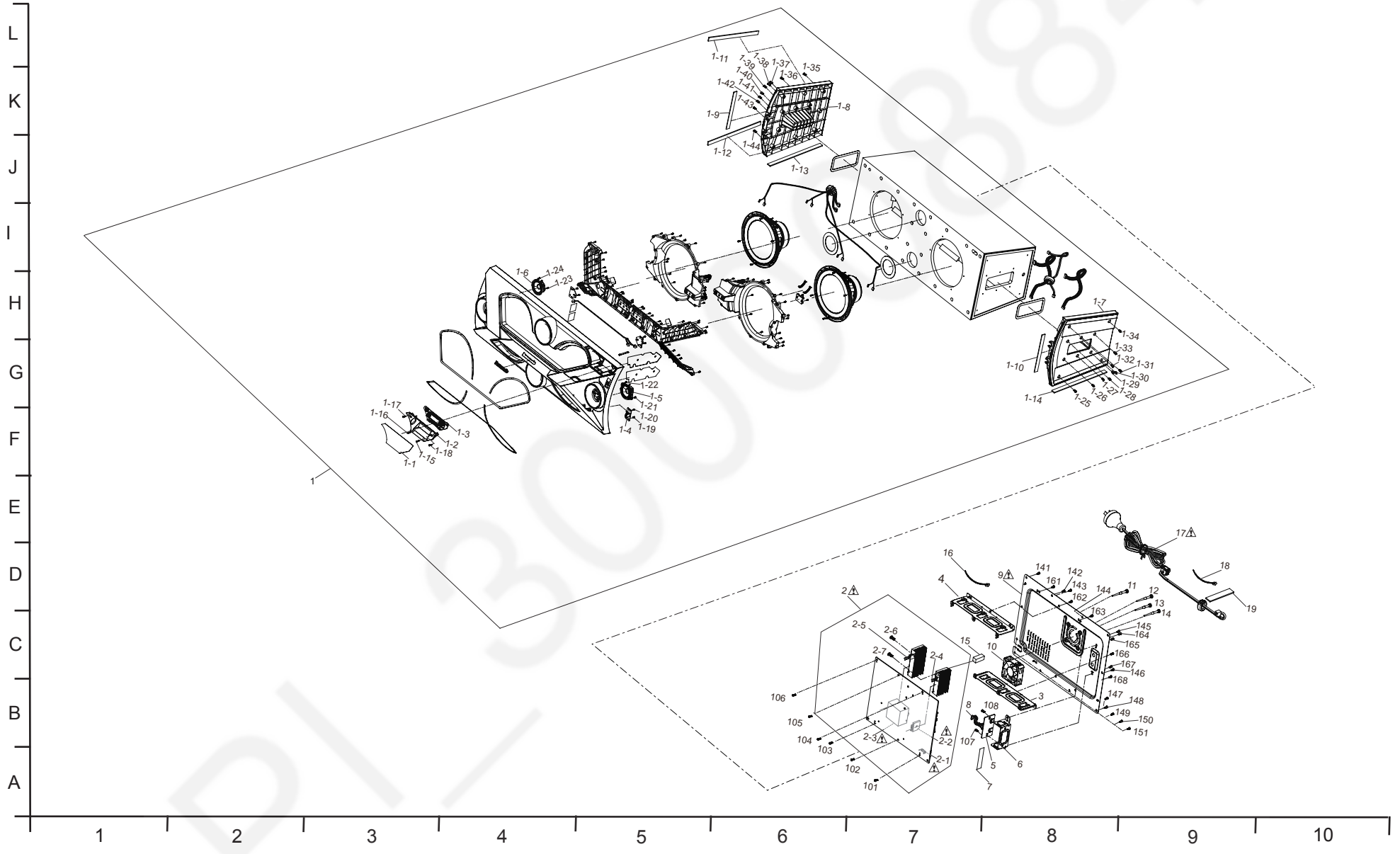

PL30003884

10.2. Packing & Accessories Section

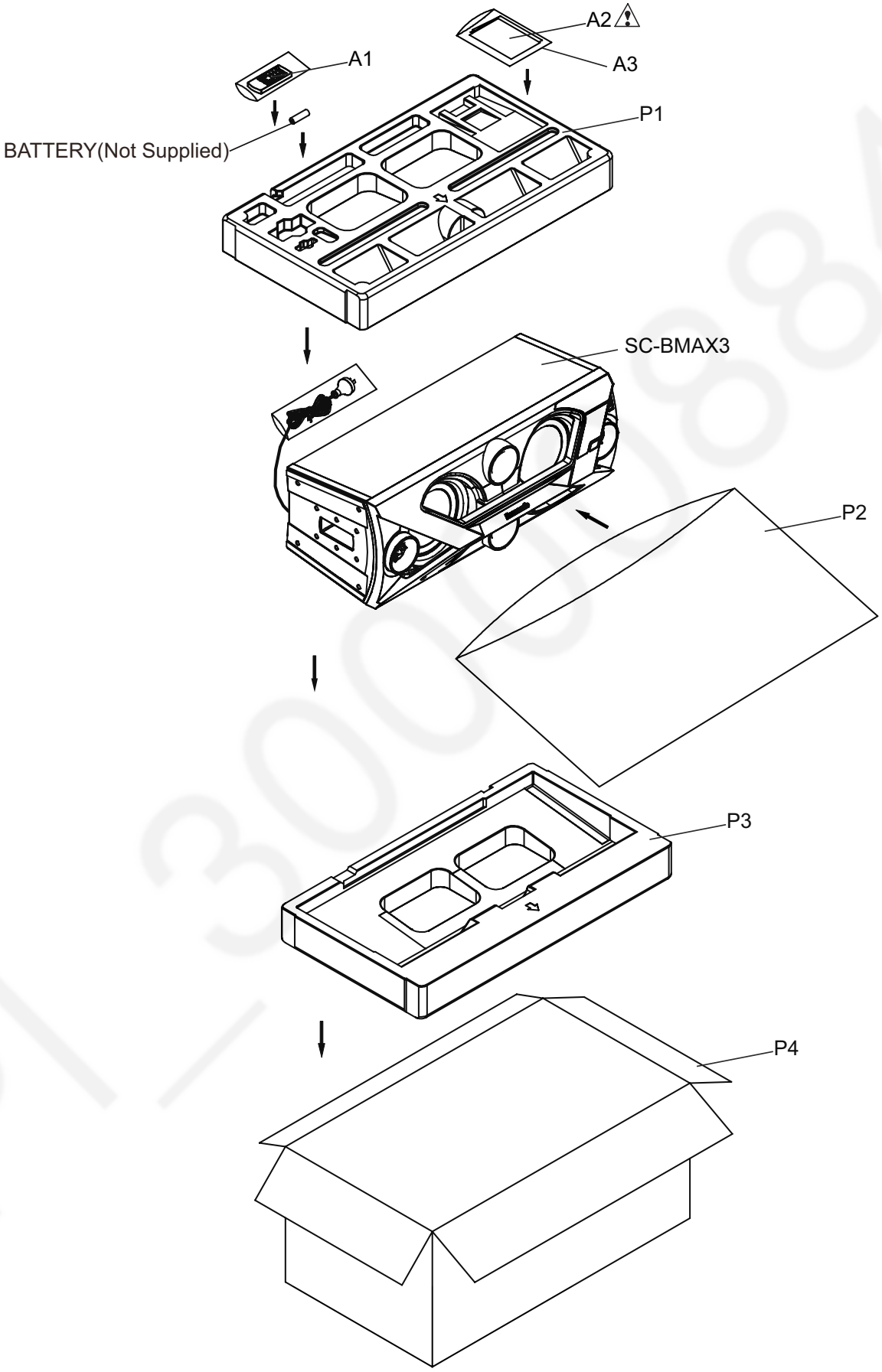

PI_30000884

10.3. Replacement Parts List

Notes:

*Important safety notice:

Components identified by ⚠ mark have special characteristics important for safety.

When replacing any of components, be sure to use only manufacture's specified parts shown in the parts list.

*All Parts are supplied by PHK.

Safety	Ref. No.	Part No.	Part Name & Description	Pcs	Remarks
	1	RAQ0128	MAIN UNIT ASSY	1	
	1-1	RGK2613-K	DISPLAY LENS	1	
	1-2	RGQ0867-K	DISPLAY BRACKET	1	
	1-3	REP5175A	VFD P.C.B. UNIT	1	
	1-4	REP5176A	USB P.C.B. UNIT	1	
	1-5	RFZA0006	TWEETER SPEAKER	1	
	1-6	RFZA0006	TWEETER SPEAKER	1	
	1-7	RKX0043-K	SIDE PANEL	1	
	1-8	RKX0043-K	SIDE PANEL	1	
	1-9	RMQ2450	EVA	1	
	1-10	RMQ2450	EVA	1	
	1-11	RKA0341-K	RUBBER FOOT (A)	1	
	1-12	RKA0342-K	RUBBER FOOT (B)	1	
	1-13	RKA0343-K	RUBBER FOOT (C)	1	
	1-14	RKA0343-K	RUBBER FOOT (C)	1	
	1-15	RHD30227	BLACK SCREW (D)	1	
	1-16	RHD30227	BLACK SCREW (D)	1	
	1-17	RHD30227	BLACK SCREW (D)	1	
	1-18	RHD30227	BLACK SCREW (D)	1	
	1-19	RHD30227	BLACK SCREW (D)	1	
	1-20	RHD30227	BLACK SCREW (D)	1	
	1-21	RHD30227	BLACK SCREW (D)	1	
	1-22	RHD30227	BLACK SCREW (D)	1	
	1-23	RHD30227	BLACK SCREW (D)	1	
	1-24	RHD30227	BLACK SCREW (D)	1	
	1-25	RHD40054	BLACK SCREW (C)	1	
	1-26	RHD40054	BLACK SCREW (C)	1	
	1-27	RHD40054	BLACK SCREW (C)	1	
	1-28	RHD40054	BLACK SCREW (C)	1	
	1-29	RHD40054	BLACK SCREW (C)	1	
	1-30	RHD40054	BLACK SCREW (C)	1	
	1-31	RHD40054	BLACK SCREW (C)	1	
	1-32	RHD40054	BLACK SCREW (C)	1	
	1-33	RHD40054	BLACK SCREW (C)	1	
	1-34	RHD40054	BLACK SCREW (C)	1	
	1-35	RHD40054	BLACK SCREW (C)	1	
	1-36	RHD40054	BLACK SCREW (C)	1	

Safety	Ref. No.	Part No.	Part Name & Description	Pcs	Remarks
	1-37	RHD40054	BLACK SCREW (C)	1	
	1-38	RHD40054	BLACK SCREW (C)	1	
	1-39	RHD40054	BLACK SCREW (C)	1	
	1-40	RHD40054	BLACK SCREW (C)	1	
	1-41	RHD40054	BLACK SCREW (C)	1	
	1-42	RHD40054	BLACK SCREW (C)	1	
	1-43	RHD40054	BLACK SCREW (C)	1	
	1-44	RHD40054	BLACK SCREW (C)	1	
⚠	2	REP5177A	MAIN P.C.B. UNIT	1	
⚠	2-1	RFZF0008	FUSE	1	
⚠	2-2	RFZF0009	RECTIFIER DIODE	1	
⚠	2-3	RFZF0010	POWER TRANSFORMER	1	
	2-4	RFZF0011	POWER TRANSISTOR (A)	1	
	2-5	RFZF0012	POWER TRANSISTOR (B)	1	
	2-6	RHD30228	SILVER SCREW (C)	1	
	2-7	RHD30228	SILVER SCREW (C)	1	
	3	RMN1118	MIAN P.C.B.UNIT BRACKET	1	
	4	RMN1118	MIAN P.C.B.UNIT BRACKET	1	
	5	REP5178A	AUX P.C.B. UNIT	1	
	6	RMN1119	AUX P.C.B. UNIT BRACKET	1	
	7	RMQ2451	NON-WEAVE SHEET	1	
	8	REX1841	CORD (A)	1	
⚠	9	RGR0477A-A	BACK PANEL	1	
	10	RFZF0013	FAN MOTOR UNIT	1	
	11	RMG1018-K	SILICON BOLT	1	
	12	RMG1018-K	SILICON BOLT	1	
	13	RMG1018-K	SILICON BOLT	1	
	14	RMG1018-K	SILICON BOLT	1	
	15	RMG1019-K	RUBBER FOOT (D)	1	
	16	RMQ2453	CABLE TIE	1	
⚠	17	REX1842	AC CORD	1	
	18	RMQ2453	CABLE TIE	1	
	19	RMQ2452	SPONGE EVA	1	

Safety	Ref. No.	Part No.	Part Name & Description	Pcs	Remarks
	101	RHD30230	SILVER SCREW (A)	1	
	102	RHD30230	SILVER SCREW (A)	1	
	103	RHD30230	SILVER SCREW (A)	1	
	104	RHD30230	SILVER SCREW (A)	1	
	105	RHD30230	SILVER SCREW (A)	1	
	106	RHD30230	SILVER SCREW (A)	1	
	107	RHD30230	SILVER SCREW (A)	1	
	108	RHD30230	SILVER SCREW (A)	1	
	141	RHD40055	BLACK SCREW (A)	1	
	142	RHD40055	BLACK SCREW (A)	1	
	143	RHD40055	BLACK SCREW (A)	1	
	144	RHD40055	BLACK SCREW (A)	1	
	145	RHD40055	BLACK SCREW (A)	1	
	146	RHD40055	BLACK SCREW (A)	1	
	147	RHD40055	BLACK SCREW (A)	1	
	148	RHD40055	BLACK SCREW (A)	1	
	149	RHD40055	BLACK SCREW (A)	1	
	150	RHD40055	BLACK SCREW (A)	1	
	151	RHD40055	BLACK SCREW (A)	1	
	161	RHD30229	BLACK SCREW (B)	1	
	162	RHD30229	BLACK SCREW (B)	1	
	163	RHD30229	BLACK SCREW (B)	1	
	164	RHD30229	BLACK SCREW (B)	1	
	165	RHD30229	BLACK SCREW (B)	1	
	166	RHD30229	BLACK SCREW (B)	1	
	167	RHD30229	BLACK SCREW (B)	1	
	168	RHD30229	BLACK SCREW (B)	1	
	A1	N2QAYB001000	REMOTE CONTROLLER	1	
⚠	A2	SQT0470-1	OPERATING INSTRUCTIONS	1	
	A3	RPF0750	POLY BAG	1	
	P1	RPN2740	POLYFOAM	1	
	P2	RPQ3372	MAIN UNIT BAG	1	
	P3	RPN2740	POLYFOAM	1	
	P4	RPG0P57	PACKING CASE	1	

P1500884