ORDER NO. AD9101029C1
A6

Service Manual

Cassette Deck

RS-CH7

Dolby NR-Equipped
Stereo Double Cassette Deck

DOLBY B•C NR

Color

(K)	Black Type

Area

Country Code	Area	Color
(PP)	U.S.A./Canada.	(K)

System: SC-CH7

RS-TR165 MECHANISM SERIES (AR300)

Because of unique interconnecting cables, when a component requires service, send or bring in the entire system.

■ SPECIFICATIONS

Track system	Compact cassette stereo
Tape speed	4.8 cm/sec. (1⅞ ips)
Bias frequency	80 kHz
Heads	
(DECK 2) REC/PLAY	Permalloy head
Erasing	Double-gap ferrite head
(DECK 1) PLAY	Permalloy head
Motors	
(DECK 2)	DC servo motor
(DECK 1)	DC servo motor
Wow and flutter	0.1% (WRMS)
Fast Forward and Rewind Time	Approx. 110 seconds with C-60 cassette tape
Frequency response	
METAL	30 Hz~17 kHz
CrO_2	30 Hz~16 kHz
NORMAL	30 Hz~16 kHz
S/N	(signal level=max recording level, CrO_2 type tape)
DOLBY B NR on	66 dB (CCIR)
DOLBY C NR on	74 dB (CCIR)
DOLBY off	56 dB (A WTD)

■ GENERAL

Power consumption	16 W
Dimensions (W×H×D)	215×110×297 mm ($8^{15}/_{32}$"×$4^{11}/_{32}$"×$11^{11}/_{16}$")
Weight	2.6 kg (5.7 lb.)

Notes:
1. Specifications are subject to change without notice.
2. Weight and dimensions shown are approximate.

System	Tuner	Amplifier	CD Player	Cassette Deck	Speakers
SC-CH7	ST-CH7	SU-CH7	SL-CH7	RS-CH7	SB-CH7

Panasonic®

■ CONTENTS

■ SAFETY PRECAUTION

1. Before servicing, unplug the power cord to prevent an electric shock.
2. When replacing parts, use only manufacturer's recommended components for safety.
3. Check the condition of the power cord. Replace if wear or damage is evident.
4. After servicing, be sure to restore the lead dress, insulation barries, insulation papers, shields, etc.
5. Before returning the serviced equipment to the customer, be sure to make the following insulation resistance test to prevent the customer from being exposed to a shock hazard.

•INSULATION RESISTANCE TEST

1. Unplug the power cord and short the two prongs of the plug with a jumper wire.
2. Turn on the power switch.
3. Measure the resistance value with ohmmeter between the jumpered AC plug and each exposed metal cabinet part, such as screwheads antenna, control shafts, handle brackets, etc. Equipment with antenna terminals should read between 3 MΩ and 5.2 MΩ to all exposed parts. (Fig. A) Equipment without antenna terminals should read approximately infinity to all exposed parts. (Fig. B)

Note: Some exposed parts may be isolated from the chassis by design. These will read infinity.

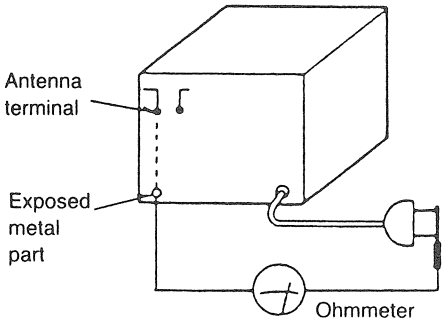

(Fig. A)

Resistance=3 MΩ–5.2 MΩ

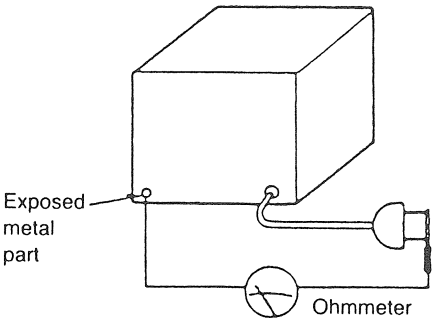

(Fig. B)

Resistance=Approx. ∞

4. If the measurement is outside the specified limits, there is a possibility of a shock hazard. The equipment should be repaired and rechecked before it is returned to the customer.

NOTES:
Refer to the service manual for Model No. SU-CH7, Order No. AD9101027C1 for information on ACCESSORIES, INSTALLATION OF THE SYSTEM, CONNECTIONS and PACKAGING.

■ LOCATION OF CONTROLS

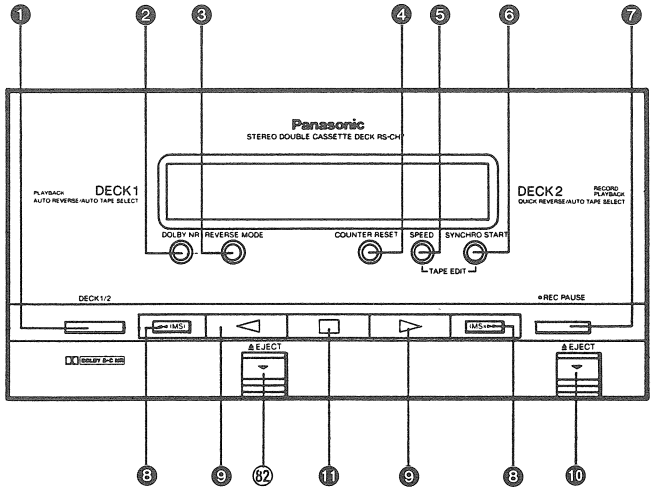

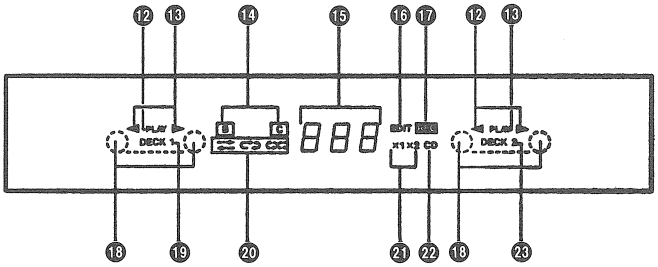

Cassette deck section

❶ Deck 1/deck 2 selector (DECK 1/2)
This button is used to select the deck to be operated.

❷ Dolby noise reduction button (DOLBY NR)
This button is used to reduce the hissing noise heard from the tape. This unit is provided with both the Dolby B-type and Dolby C-type noise reduction systems.

❸ Reverse mode button (REVERSE MODE)
This button is used to select the reverse mode (for playback or recording).

❹ Tape counter reset button (COUNTER RESET)
This button is used to reset the tape counter indicator to "000".

❺ Edit speed button (SPEED)
This button is used to select the recording speed when edit-recording tapes.

❻ Synchro-start button (SYNCHRO START)
This button is used to start a tape-to-tape recording, simultaneously starting deck 1 (the playback deck) and the deck 2 (the recording deck).

❼ Record/record standby button (● REC PAUSE)
This button is used to put deck 2 into the record standby mode.

❽ Fast-forward/rewind/music select button (◀◀ (MS), (MS) ▶▶)
These buttons are used to advance or rewind the tape, or to quickly search for the beginning of a tune while the tape is being played.

❾ Playback button (◁, ▷)
These buttons are used to start the playback or recording (deck 2 only).

❿ Eject button (▲ EJECT)
This button is used to open the cassette holder.

⓫ Stop button (□)
This button is used to stop the tape movement.

Display section

⓬ Playback indicator (PLAY)
Illuminates to show that deck 1 or 2 is in the playback mode or recording mode (deck 2).

⓭ Tape travel direction indicators (◀, ▶)
One of these indicators illuminates to show the direction of tape travel.

⓮ Dolby noise reduction indicators (B, C)
Each indicator illuminates to show the type of Dolby noise reduction system selected by pressing the Dolby noise reduction button.

⓯ Tape counter
Indicates the amount of tape movement separately for deck 1 or deck 2.

⓰ Edit indicator (EDIT)
Illuminates when edit-recording tapes or CD.

⓱ Recording indicator (REC)
Illuminates to indicate that deck 2 is in the recording standby or recording mode.

⓲ Tape indicator
Illuminates to show that there is a tape in the cassette holder of deck 1 or deck 2.

⓳ Deck 1 operating indicator (DECK 1)
Illuminates to show that deck 1 can be operated.

⓴ Reverse mode indicators (⇄, ⊂⊃, ⊂⊃)
Each indicator illuminates to show which of the reverse modes was selected by the reverse mode button.

㉑ Edit speed indicators (×1, ×2)
One of these indicators will illuminate to show which of the tape-to-tape recording speeds was selected by pressing the edit speed button.

㉒ CD indicator (CD)
Illuminates when edit-recording a CD.

㉓ Deck 2 operating indicator (DECK 2)
Illuminates to show that deck 2 can be operated.

■ DISASSEMBLY INSTRUCTIONS

"ATTENTION SERVICER"
Some chassis components may have sharp edges. Be careful when disassembling and servicing.

Ref. No. 1	Removal of the Cabinet
Procedure 1	

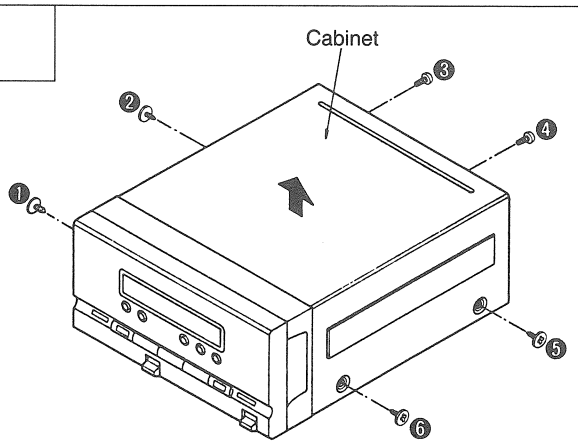

●Remove 6 screws (❶~❻).

Ref. No. 2	Removal of the Mechanism Control P.C.B.
Procedure 1→2	

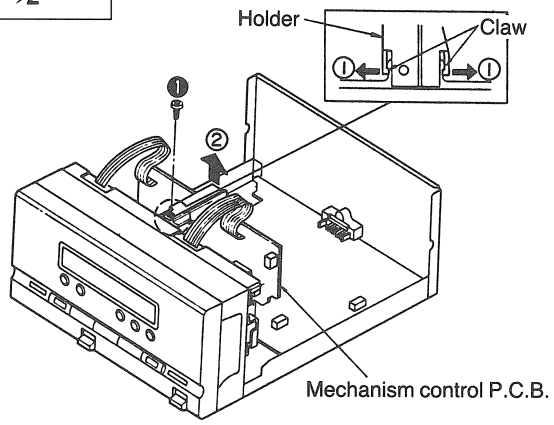

1. Remove the screw (❶).
2. Remove 2 claw in the direction of arrow ① and then remove the holder.
3. Remove the mechanism control P.C.B. in the direction of arrow ②.

Removal of the Flat Cable

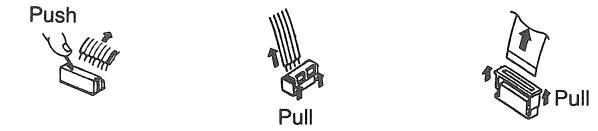

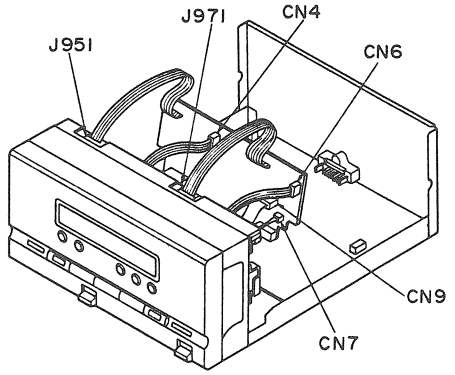

4. Remove 5 flat cable (CN4, CN6, CN9, J951, J971).
5. Remove the connector (CN7).

Ref. No. 3	Removal of the Main P.C.B.
Procedure 1→2→3	

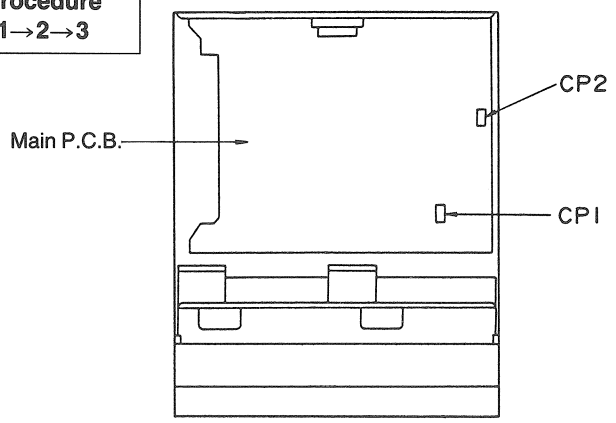

1. Remove 2 connector (CP1, CP2).

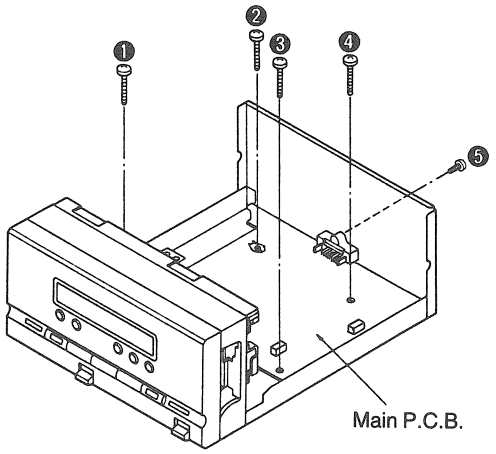

2. Remove 5 screws (❶~❺).

Ref. No. 4	Removal of the Mechanism Unit/Front Panel Ass'y
Procedure 1→2→4	

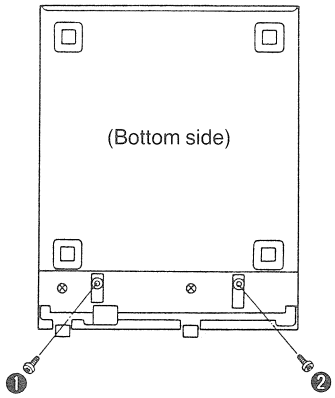

1. Remove 4 screws (❶~❹).

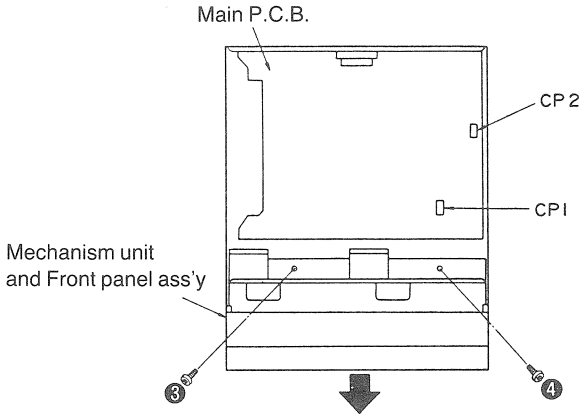

2. Remove 2 connectors (CP1, CP2).
3. Remove the mechanism unit and front panel in the direction of the arrow.

Ref. No. 5	Removal of the Mechanism Unit
Procedure 1→2→4→5	

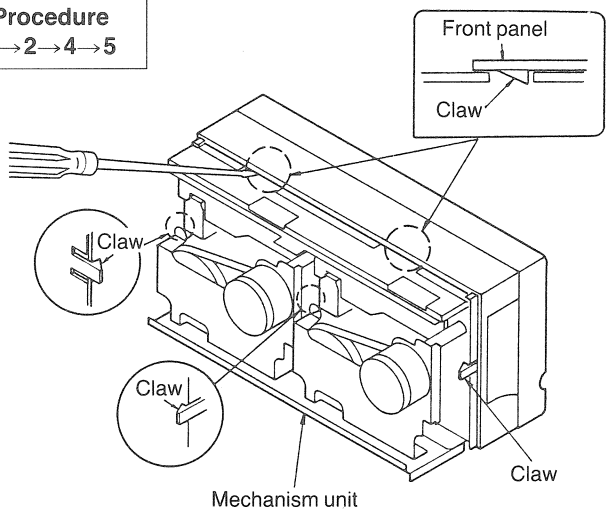

●Remove 5 claws.

Ref. No. 6	Removal of the Front Panel
Procedure 1→2→4→6	

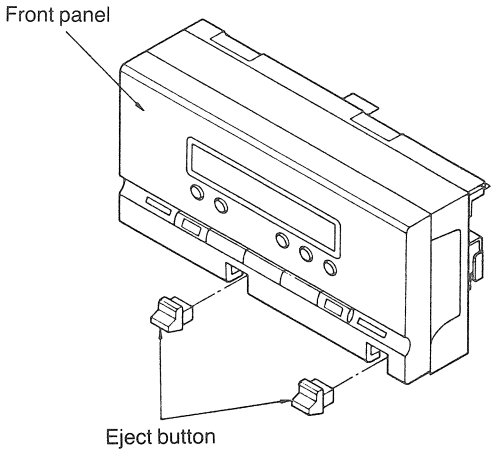

1. Pull out the eject buttons. (DECK 1, DECK 2).

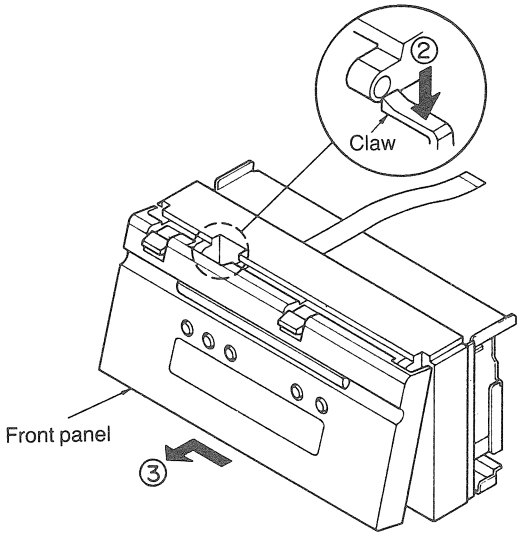

3. Push the claw in the direction of arrow ②, and then remove the front panel in the direction of arrow ③.

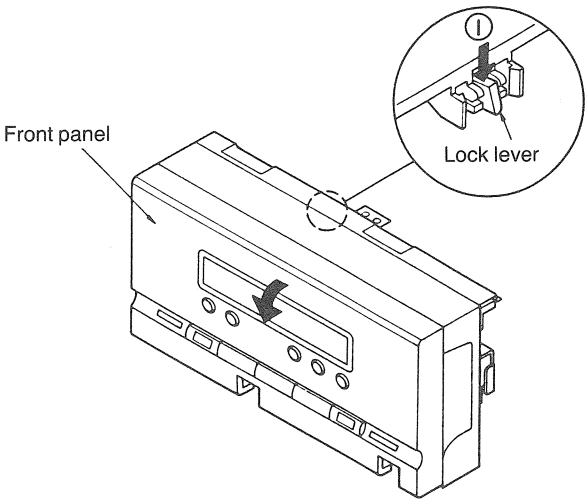

2. Push the lever in the direction of the arrow ①, and then open the front panel.

Ref. No. 7	Removal of the Operation P.C.B.
Procedure 1→2→4→6→7	

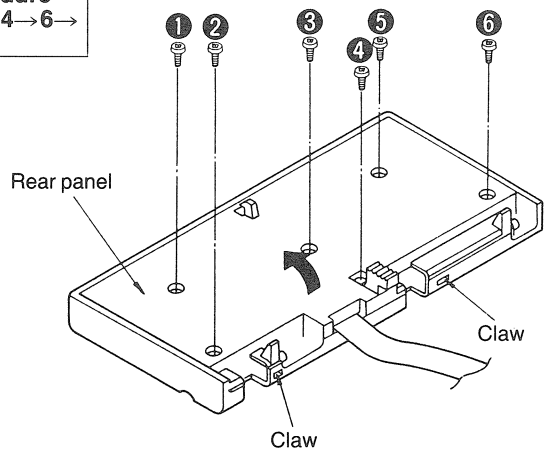

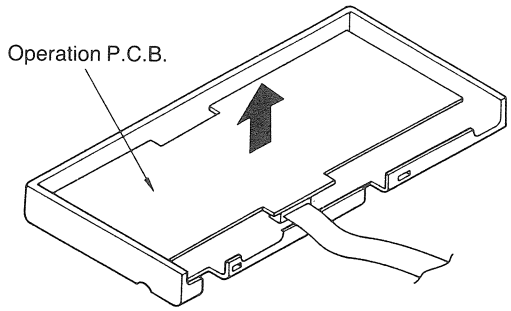

1. Remove 6 screws (❶~❻).
2. Remove 2 claws.
3. Remove the rear panel in the direction of arrow.
4. Remove the operation P.C.B. in the direction of arrow.

Ref. No. 8	Removal of the Eject rod (DECK 1 and DECK 2)
Procedure 1→2→4→5→6→8	

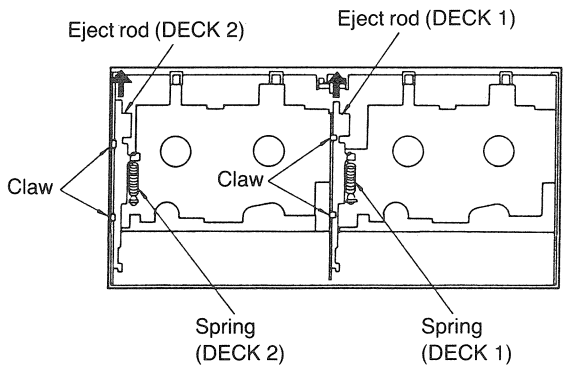

1. Push the eject rod in the direction of arrow and then open the cassette holder.
2. Remove the spring (DECK 1, DECK 2).
3. Press 4 claws and then remove the eject rod.

Ref. No. 9	Removal of the Eject Angle (A) and Eject Angle (B)
Procedure 1→2→4→5→6→8→9	

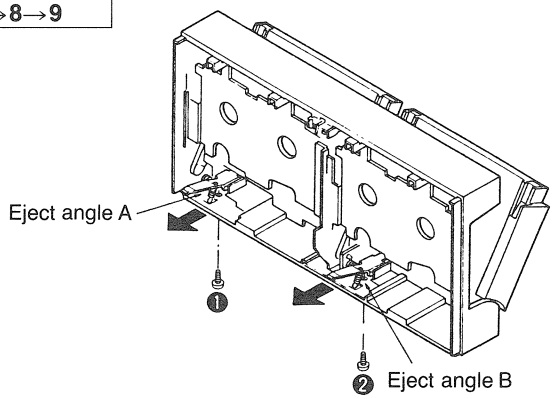

■ Removal of the Eject Angle (A)

1. Remove the screw (❶).
2. Pull out the eject angle (A).

■ Removal of the Eject Angle (B)

1. Remove the screw (❷).
2. Pull out the eject angle (B).

Ref. No. 10	Removal of the Cassette Holder (DECK 1 and DECK 2)
Procedure 1→2→4→5→6→8→9→10	

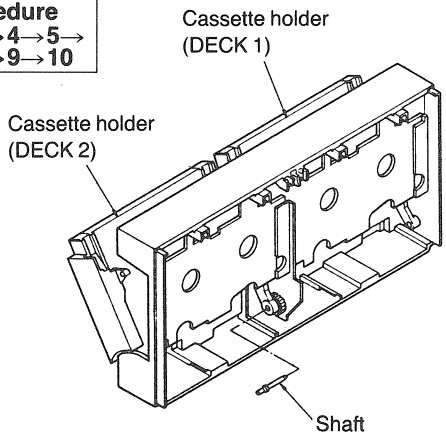

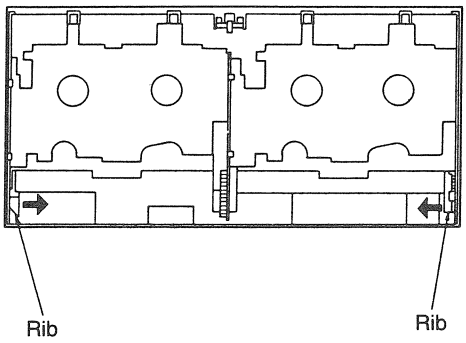

1. Pull out the shaft.
2. Push the rib in the direction of arrow and then remove the cassette holder.

Ref. No. 11	Check of the Main P.C.B.
Procedure 1→11	

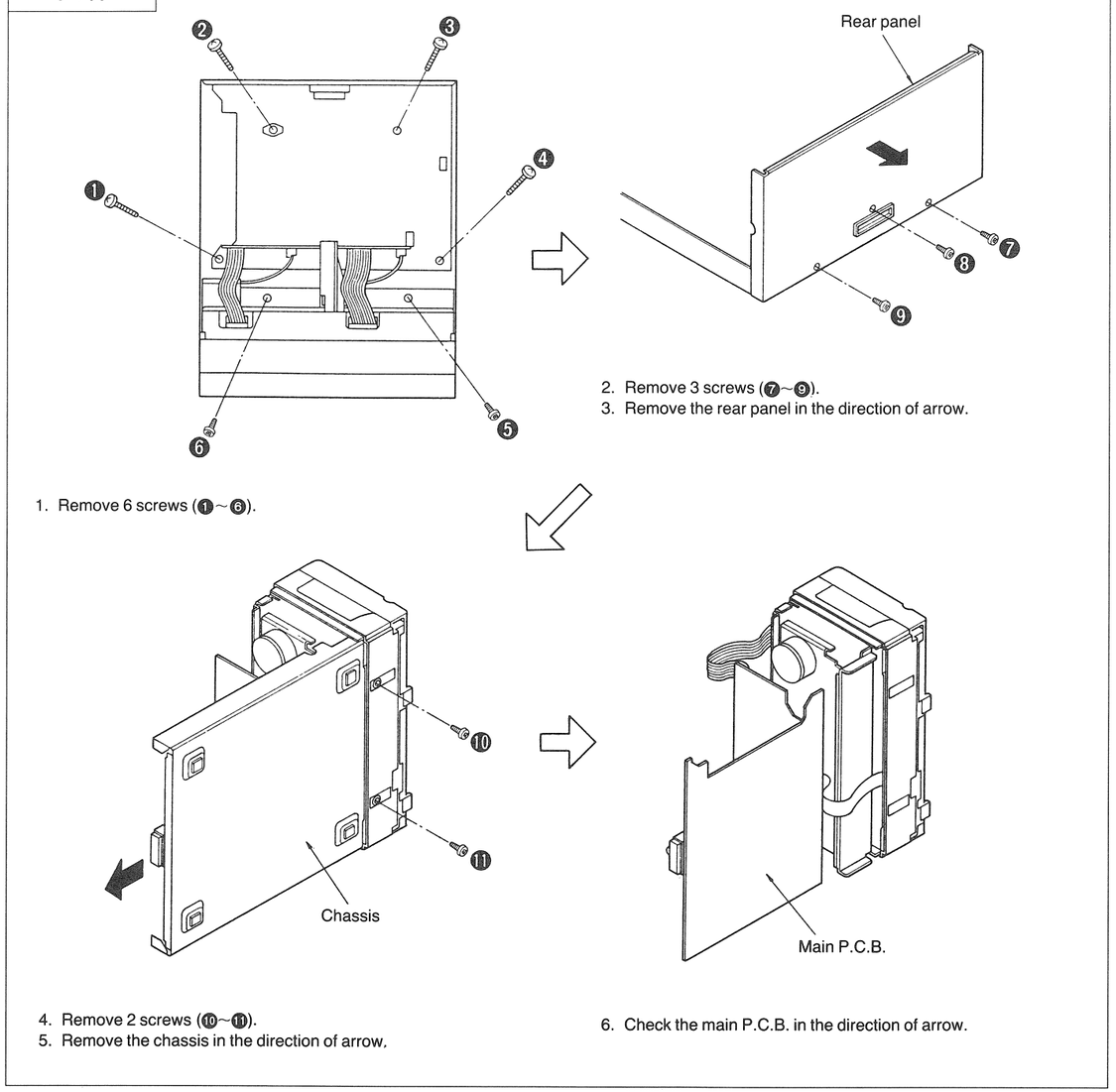

1. Remove 6 screws (❶~❻).
2. Remove 3 screws (❼~❾).
3. Remove the rear panel in the direction of arrow.
4. Remove 2 screws (❿~⓫).
5. Remove the chassis in the direction of arrow.
6. Check the main P.C.B. in the direction of arrow.

■ DESCRIPTION OF FL PANEL [FL 1 (RSL0088-F)]

●Grid assignment

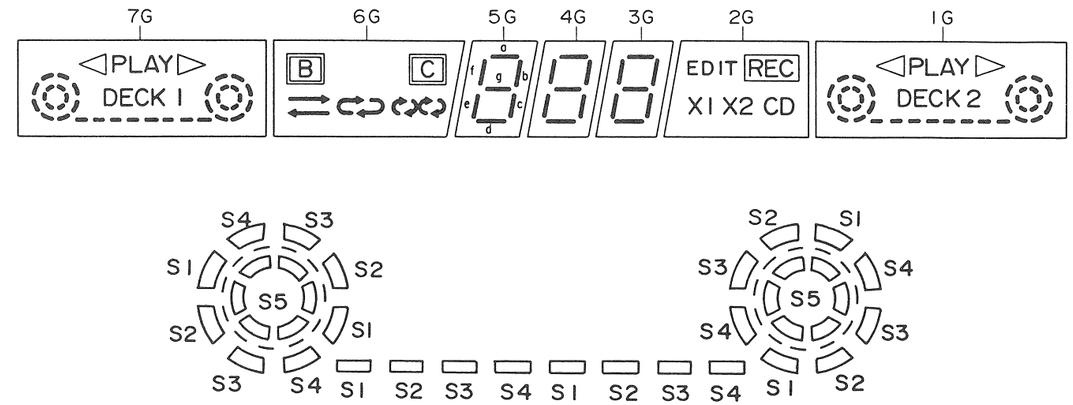

●Pin connection

Pin No.	35	34	33	32	31	30	29	28	27	26	25	24	23	22	21	20	19	18	17	16	15	14	13	12	11	10	9	8	7	6	5	4	3	2	1
Connection	F+	F+	NP	P1	P2	P3	P4	P5	P6	P7	P8	P9	NP	NP	NP	NP	NP	NP	NP	NP	NP	NP	NP	NC	NC	7G	6G	5G	4G	3G	2G	1G	NP	F−	F−

●Anode connection

	7G	6G	5G	4G	3G	2G	1G
P1	◁	B	a	a	a	EDIT	◁
P2	PLAY	–	b	b	b	REC	PLAY
P3	S1	⟲⟳	c	c	c	X1	S1
P4	S3	–	d	d	d	CD	S3
P5	S2	⇄	e	e	e	X2	S2
P6	▷	C	f	f	f	–	▷
P7	DECK1	⇌	g	g	g	–	DECK2
P8	S4	–	–	–	–	–	S4
P9	S5	–	–	–	–	–	S5

■ MEASUREMENTS AND ADJUSTMENTS

This tape deck (RS-CH7) is powered by the amplifier (SU-CH7).
To adjust or check operations on the tape deck as a separate unit, follow the steps below.

1. **Apply a power supply voltage of AC 20 V to TP601 and TP603.**
2. **Short-circuit TP504 and TP602 (GND) (power supply switch: ON).**

• HOW TO CONNECT

Note:
Apply a power supply voltage of AC 20 V to TP601 and TP603 by using a Voltage Controller. If it is not available, use a Power Supply Fixture (SZZA1058C) instead.

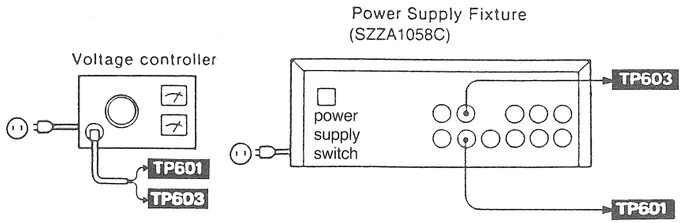

•Adjustment points

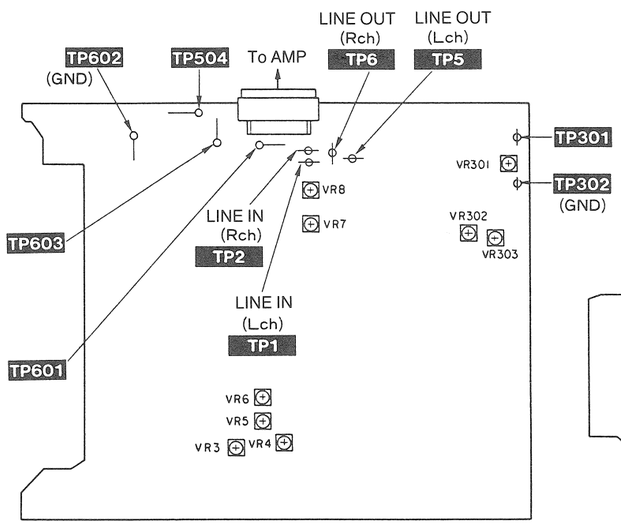

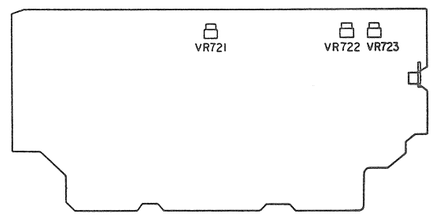

•Measurement Condition
- •Rec. level control; Maximum
- •Reverse-mode selector switch; ⇄
- •Edit-recording tape-speed selector; NORMAL
- •Timer-recording switch; off
- •Dolby NR switch; Off
- •Make sure heads are clean
- •Make sure capstan and pressure roller are clean
- •Judgeable room temperature 20±5°C (68±9°F)

•Measuring instrument
- •EVM (Electronic Voltmeter)
- •Oscilloscope
- •Digital frequency counter
- •AF oscillator
- •ATT (Attenuator)
- •DC voltmeter
- •Resistor (600Ω)

•Test tape
- •Head azimuth adjustment (8 kHz, −20 dB); QZZCFM
- •Tape speed adjustment (3 kHz, −10 dB); QZZCWAT
- •Playback frequency response (315 Hz, 12.5 kHz, 10 kHz, 8 kHz, 4 kHz, 1 kHz, 250 Hz, 125 Hz, 63 Hz, −20 dB); QZZCFM
- •Playback gain adjustment (315 Hz, 0 dB); QZZCFM
- •Overall frequency response, Overall gain adjustment Normal reference blank tape; QZZCRA
  CrO_2 reference blank tape; QZZCRX
  Metal reference blank tape; QZZCRZ

HEAD AZIMUTH ADJUSTMENT (DECK 1/2)

1. Playback the azimuth adjustment portion (8kHz, −20dB) of the test tape (QZZCFM). Vary the azimuth adjusting screw until the outputs of the L-CH and R-CH are maximized and the lissajous waveform, as illustrated, approaches 0 degrees.

Note: If L-CH and R-CH are not maximized at the same point, adjust to the point where the levels of each channel are maximized and equal.

2. Perform the same adjustment in the play mode.
3. After the adjustment, apply screwlock to the azimuth adjusting screw.

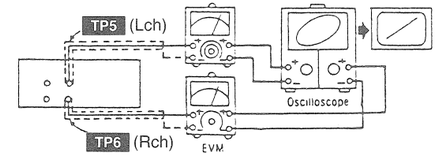

Fig. 1

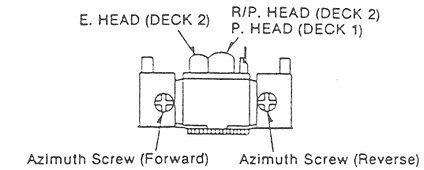

Fig. 2

TAPE SPEED ADJUSTMENT (DECK 1/2)

Normal speed

1. Shift the edit-recording tape-speed selector to **"NORMAL"**.
2. Playback the middle portion of the test tape (QZZCWAT).
3. Adjust Deck 1=**VR721** and Deck 2=**VR723** so that the output is within the standard value.

Standard value: 3000±15 Hz (NORMAL speed)

High speed [Set the unit to forward (FWD) mode.]

4. Push the edit speed button (SPEED). This will set the high speed mode.
5. Playback the middle portion on the test tape (QZZCWAT).
6. At that time, check if the output from DECK 1 is within the standard value.

Standard value: 6000±600 Hz (HIGH speed)

7. Adjust **VR722** so that the output frequency of DECK 2 is within **±30 Hz** of the value of the output frequency of DECK 1.

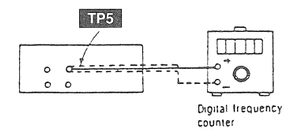

Fig. 3

PLAYBACK GAIN ADJUSTMENT (DECK 1/2)

1. Playback the gain adjusted portion (315Hz, 0dB) of the test tape (QZZCFM).
2. Adjust Deck 2=**VR5** (L-CH) [[**VR6** (R-CH)]] and Deck 1=**VR3** (L-CH) [[**VR4** (R-CH)]] so that the output is within the standard value.

Standard value: 400 mV±0.5 dB

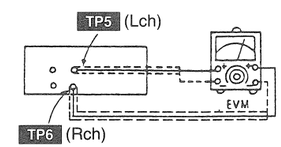

Fig. 4

PLAYBACK FREQUENCY RESPONSE (DECK 1/2)

1. Playback the frequency response portion (315Hz, 12.5kHz~63Hz, −20dB) of the test tape (QZZCFM).
2. Assure that the frequency response is within the range shown in **Fig. 6** for both L-CH and R-CH.

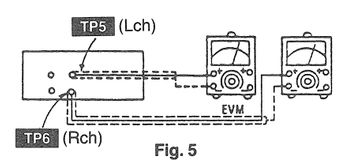

Fig. 5

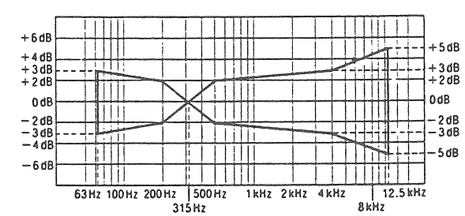

Fig. 6

ERASE CURRENT ADJUSTMENT (DECK 2)

1. Insert the Metal blank test tape (QZZCRZ) and set the unit to the Record Pause mode.
2. Adjust **VR301** so that the output between TP301 and TP302 (GND) (the output on both edges of R302) is within the standard value.

Standard value: 190 mA±5 mA (Metal)

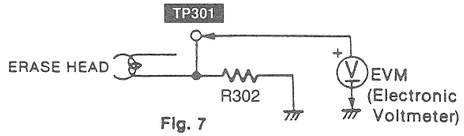

Fig. 7

OVERALL FREQUENCY RESPONSE (DECK 2)

1. Insert the Normal blank test tape (QZZCRA) and set the unit to the Record Pause mode.
2. Apply a reference input signal (1 kHz, −24 dB) through an attenuator.
3. Attenuate the signal by 20 dB and adjust the frequency from 50 Hz~10 kHz.
4. Record the frequency sweep.
5. Playback the recorded signal and assure that it is within the range shown in **Fig. 8** in comparison to the reference frequency (1 kHz).
6. If it is not within the standard range, adjust **VR302** (L-CH) and **VR303** (R-CH) so that the frequency level is within the standard range.
   - Level up in high frequency range ..... Increase the bias current.
   - Level down in high frequency range .. Decrease the bias current.
7. Repeat steps 2~6 above using the CrO_2 tape (QZZCRX) and the Metal tape (QZZCRZ) increasing the frequency range to 12.5 kHz (50 Hz~12.5 kHz).
8. Assure that the level is within the range shown in **Fig. 9**.

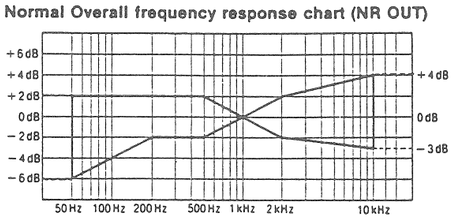

Fig. 8

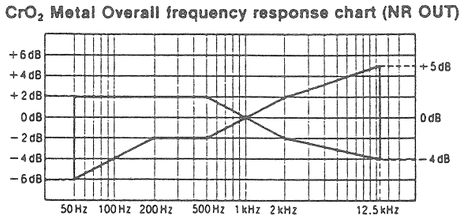

Fig. 9

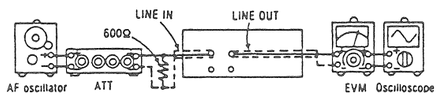

Fig. 10

LINE IN (Lch): TP1 (Rch): TP2 LINE OUT (Lch): TP5 (Rch): TP6

OVERALL GAIN ADJUSTMENT (DECK 2)

1. Insert the Normal blank test tape (QZZCRA) and set the unit to the Record pause mode.
2. Apply a reference input signal (1 kHz, −19 dB). Attenuate the output so that its level becomes 0.4 V.
3. Record this input signal.
4. Playback the signal recorded in step 3 above, and assure that the output is within the standard value.
5. If it is not within the standard value, adjust **VR7** (L-CH) and **VR8** (R-CH).
6. Repeat the step 2~5 above until the output is within the standard value.

Standard value: 0.4 V±0.5 dB

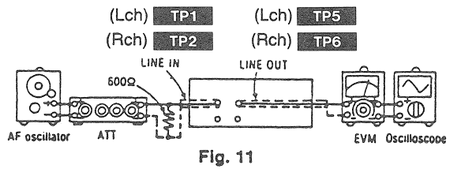

Fig. 11

■ BLOCK DIAGRAM

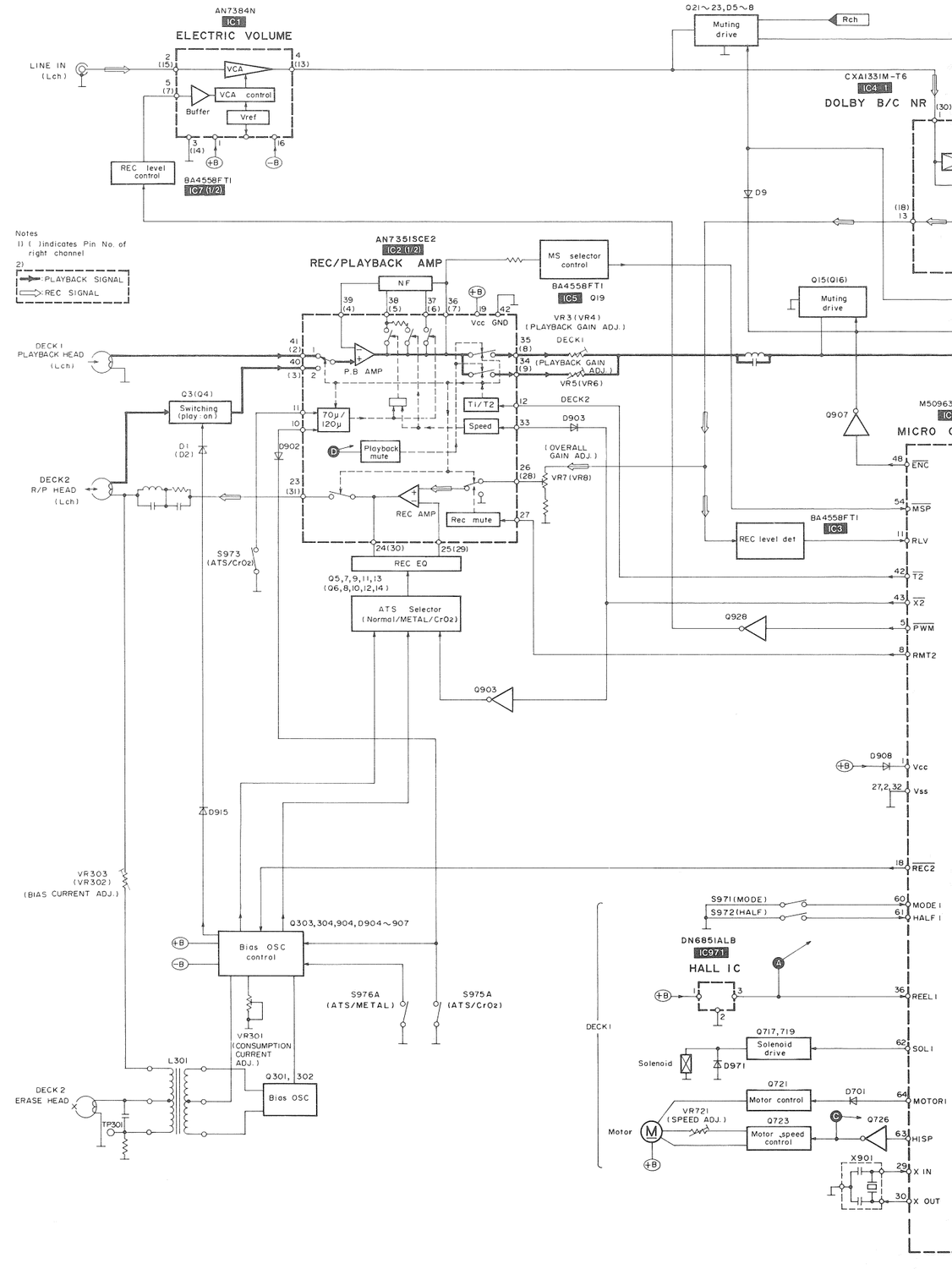

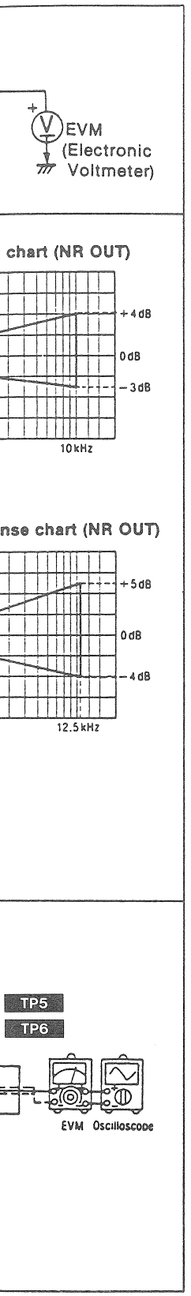

BLOCK DIAGRAM

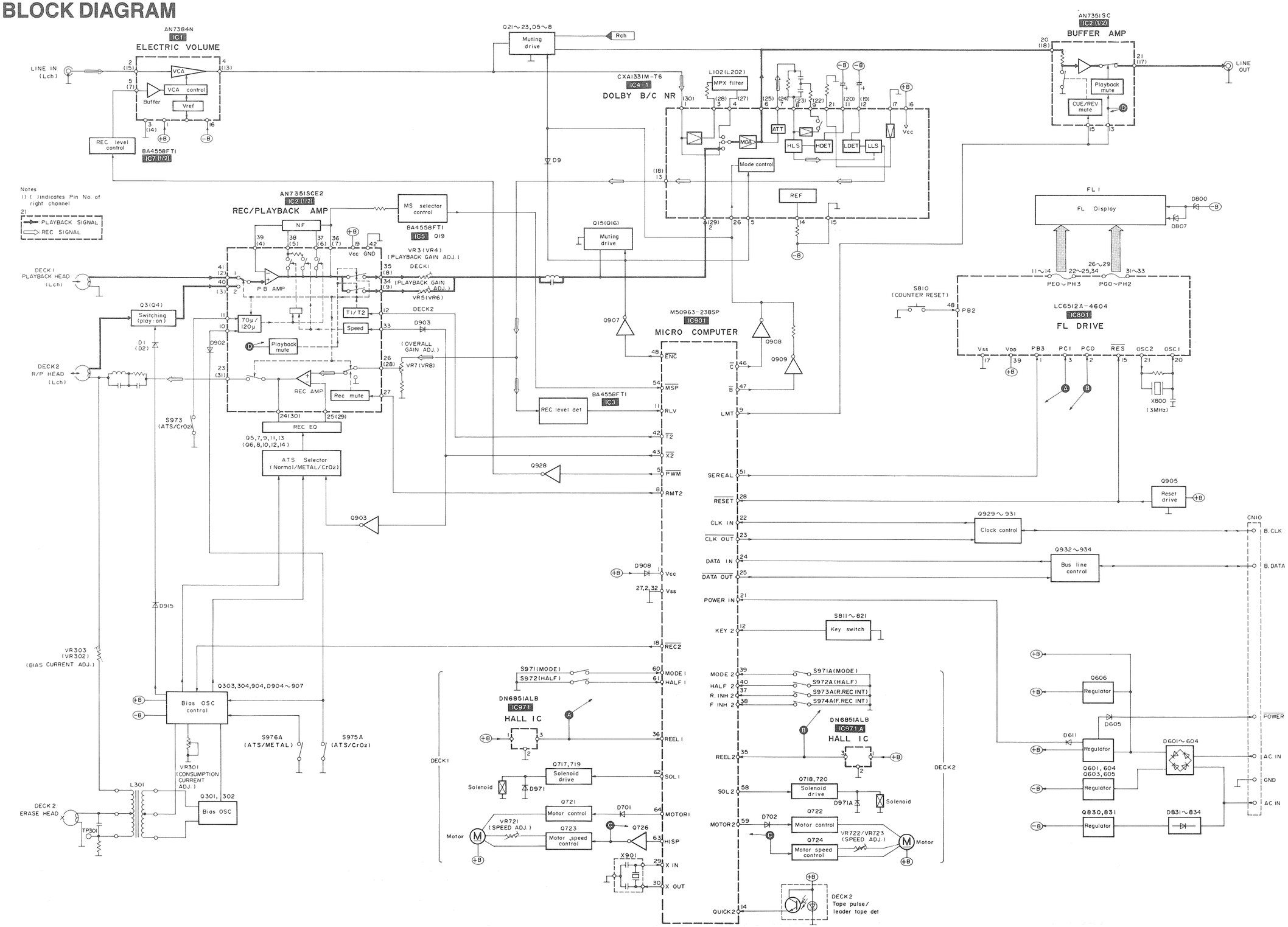

■ SCHEMATIC DIAGRAM (Parts list on pages 25~28)

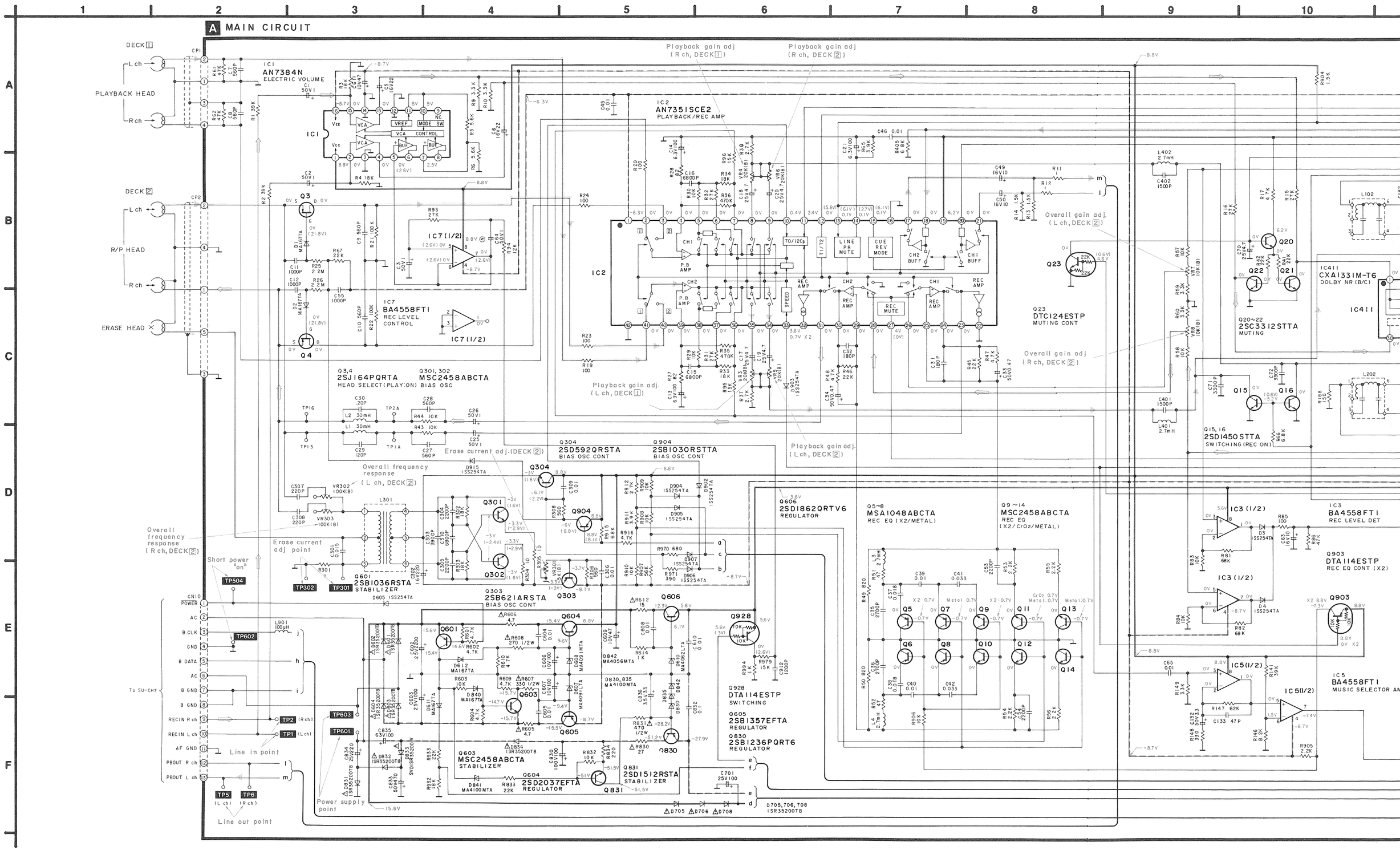

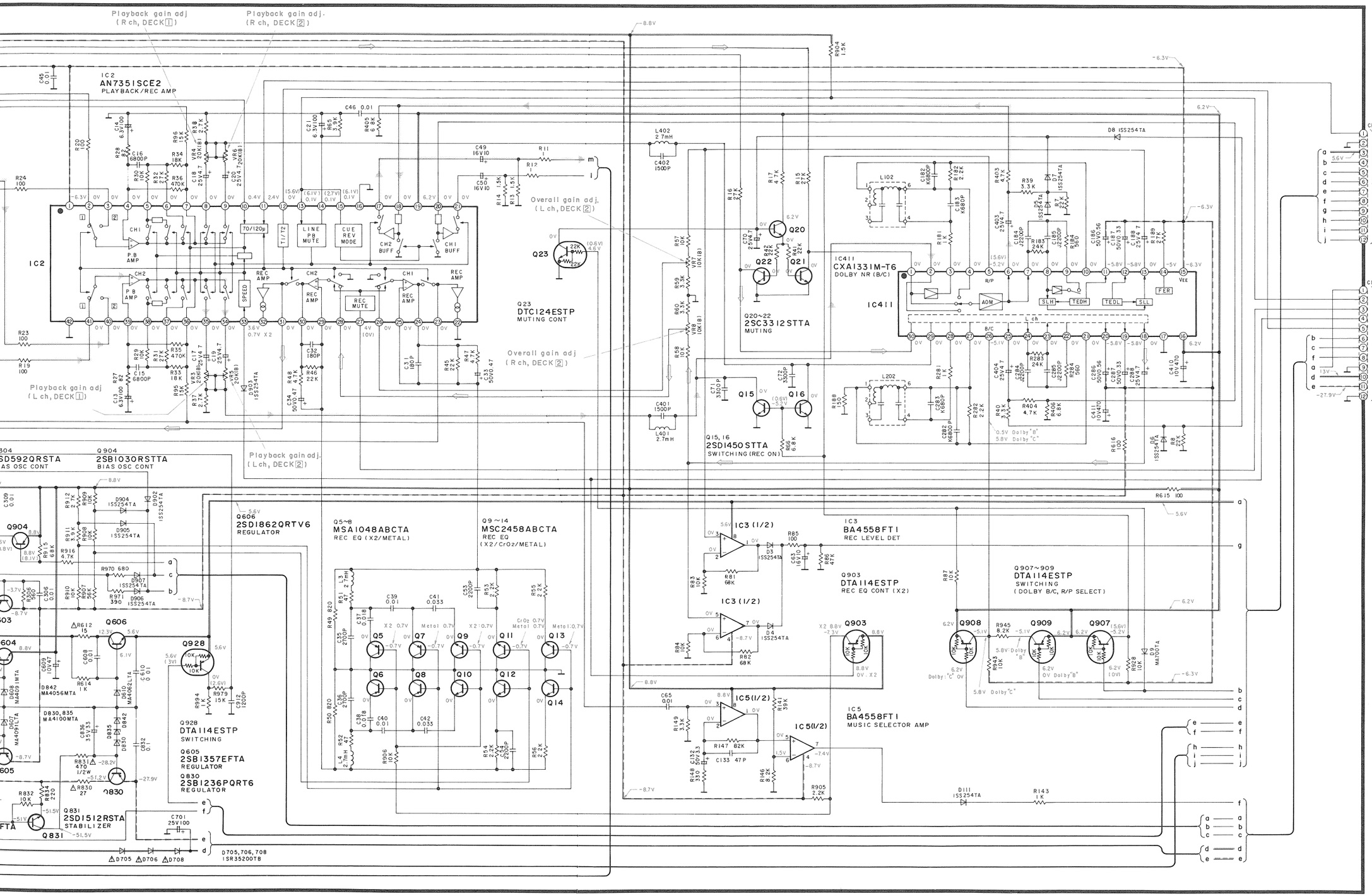
IC2
AN7351SCE2
PLAYBACK/REC AMP
Playback gain adj (R ch, DECK 1)
Playback gain adj. (R ch, DECK 2)
Overall gain adj. (L ch, DECK 2)
Overall gain adj (R ch, DECK 2)
Playback gain adj (L ch, DECK 1)
Playback gain adj. (L ch, DECK 2)
Q23
DTC124ESTP
MUTING CONT
Q20~22
2SC3312STTA
MUTING
Q15, 16
2SD1450STTA
SWITCHING (REC ON)
IC411
CXA1331M-T6
DOLBY NR (B/C)
Q904
2SB1030RSTTA
BIAS OSC CONT
Q606
2SD18620RTV6
REGULATOR
Q5~8
MSA1048ABCTA
REC EQ (X2/METAL)
Q9~14
MSC2458ABCTA
REC EQ
(X2/CrO2/METAL)
IC3
BA4558FT1
REC LEVEL DET
Q903
DTA114ESTP
REC EQ CONT (X2)
Q907~909
DTA114ESTP
SWITCHING
(DOLBY B/C, R/P SELECT)
IC5
BA4558FT1
MUSIC SELECTOR AMP
Q928
DTA114ESTP
SWITCHING
Q605
2SB1357EFTA
REGULATOR
Q830
2SB1236PQRT6
REGULATOR
Q831
2SD1512RSTA
STABILIZER
D705,706,708
1SR35200TB
CN12
CN11

RS-CH7

Notes:

- ●S810 : Counter reset switch in "OFF" position. (COUNTER RESET)
- ●S811 : Stop switch in "OFF" position. (STOP)
- ●S812, 813 : FF/REW/MS switch. (S812: ▶▶, S813: ◀◀)
- ●S814, 815 : Playback switch. (S814: ▶, S815: ◀)
- ●S816 : Rec pause switch. (REC PAUSE)
- ●S817 : DECK 1/DECK 2 selector switch.
- ●S818 : Synchro start switch. (SYNCHRO START)
- ●S819 : Edit speed switch. (SPEED)
- ●S820 : Dolby NR switch in "OFF" position.
- ●S821 : Reverse mode switch. (REVERSE MODE)
- ●S971A~976A : DECK 2 mechanism leaf switch.
  - S971A: Mode detect.
  - S972A: Half detect.
  - S973A: Reverse side record prevention tab detect.
  - S974A: Forward side record prevention tab detect.
  - S975A: ATS (CrO_2).
  - S976A: ATS (Metal).
- ●S971~973 : Deck 1 mechanism leaf switch.
  - S971: Mode detect.
  - S972: Half detect.
  - S973: ATS (CrO_2).

●Indicated voltage values are the standard values for the unit measured by the DC electronic circuit tester (high-impedance) with the chassis taken as standard.
Therefore, there may exist some errors in the voltage values, depending on the internal impedance of the DC circuit tester.
No mark...Playback ( )...Recording

●Important safety notice:
Components identified by ⚠ mark have special characteristics important for safety.
When replacing any of these components, use only manufacturer's specified parts.

●This schematic diagram may be modified at any time with the development of new technology.

: Positive voltage line
: Playback signal
: Negative voltage line
: Recording signal line

Caution!

IC and LSI are sensitive to static electricity.
Secondary trouble can be prevented by taking care during repair.

- ●Cover the parts boxes made of plastics with aluminum foil.
- ●Ground the soldering iron.
- ●Put a conductive mat on the word table.
- ●Do not touch the legs of IC or LSI with the fingers directly.

●The supply part number is described alone in the replacement parts list.

Ref. No.	Production Part No.	Supply Part No.
IC3, 5, 7	BA4558FT1	SVIBA4558F

■ SCHEMATIC DIAGRAM (Parts list on pages 25~28)

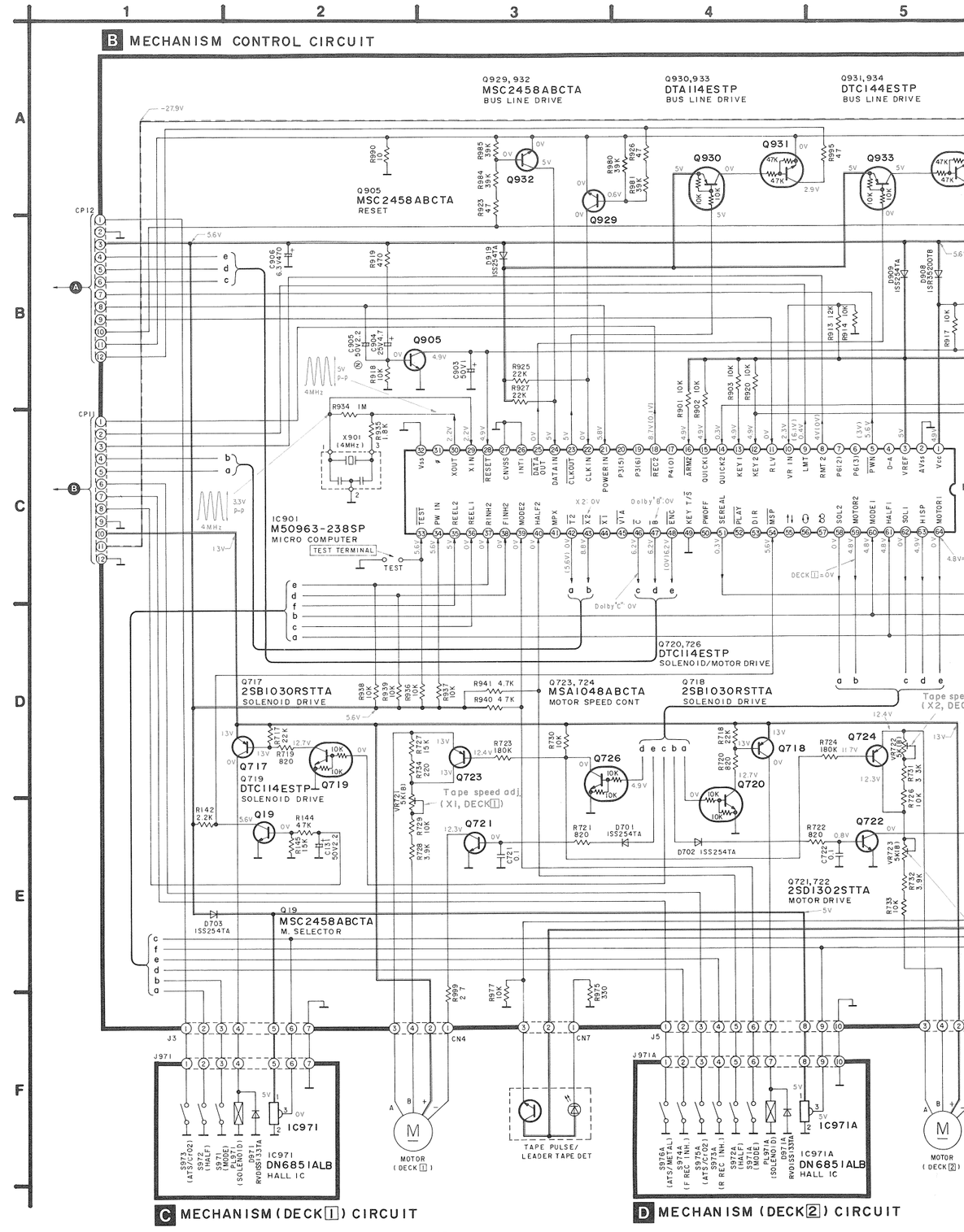

SCHEMATIC DIAGRAM (Parts list on pages 25~28)

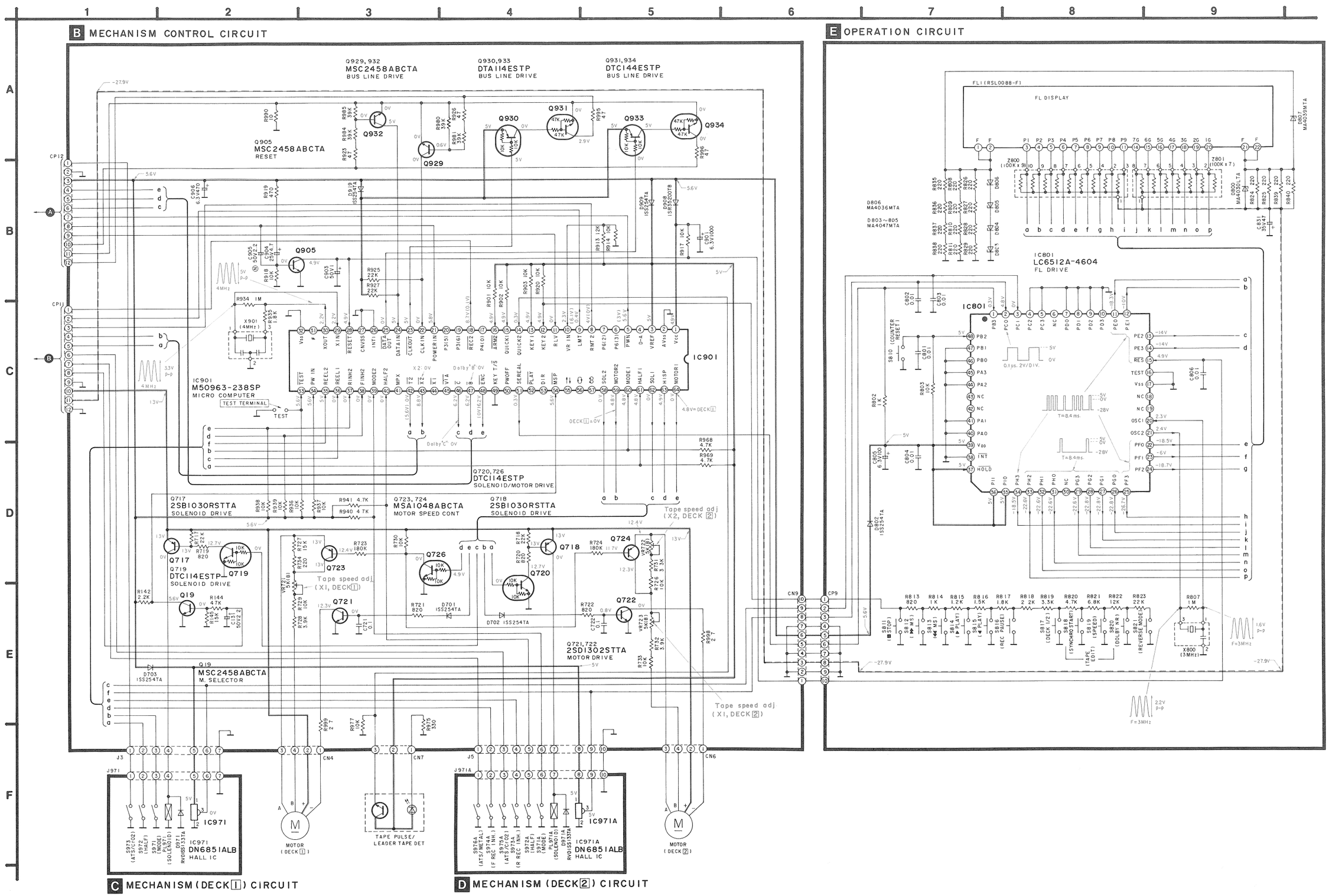

■ PRINTED CIRCUIT BOARDS AND WIRING CONNECTION DIAGRAM

(Parts list on pages 25~28)

●Terminal guide of IC's, transistors and diodes

BA4558FT1 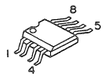	CXA1331M-T6 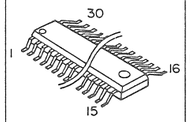	AN7351SCE2 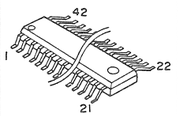
AN7384N 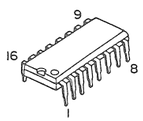	M50963-238SP 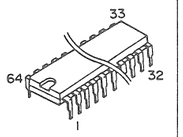	LC6512A-4604 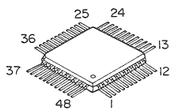
DN6851ALB 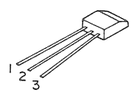	2SB621ARSTA 2SD592QRSTA 2SD1302STTA 	MSA1048ABCTA MSC2458ABCTA 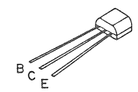
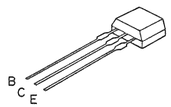	DTA114ESTP DTC114ESTP DTC124ESTP DTC144ESTP	2SB1030RSTTA 2SC3312STTA 2SD1450STTA 2SB1036RSTTA 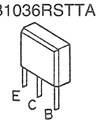
2SJ164PQRTA 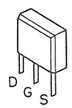	2SB1357EFTA 2SD2037EFTA 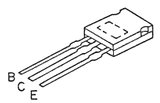	2SB1240QRTV6 2SD1862QRTV6 2SB1236PQRT6 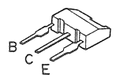
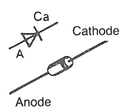	MA167TA MA700TA 1SS254TA 1SR35200TB RVD1SS133TA	MA4130MTA MA4100MTA 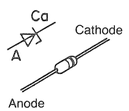
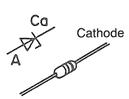	MA4030LTA MA4036MTA MA4039MTA MA4047MTA MA4062LTA MA4091LTA MA4056MTA	

NOTES:

BLK	Black	ORG	Orange
BLU	Blue	PNK	Pink
BRN	Brown	RED	Red
GRY	Gray	SLD	Shield Wire
GRN	Green	VLT	Violet
L.BLU	Light Blue	WHT	White
		YEL	Yellow

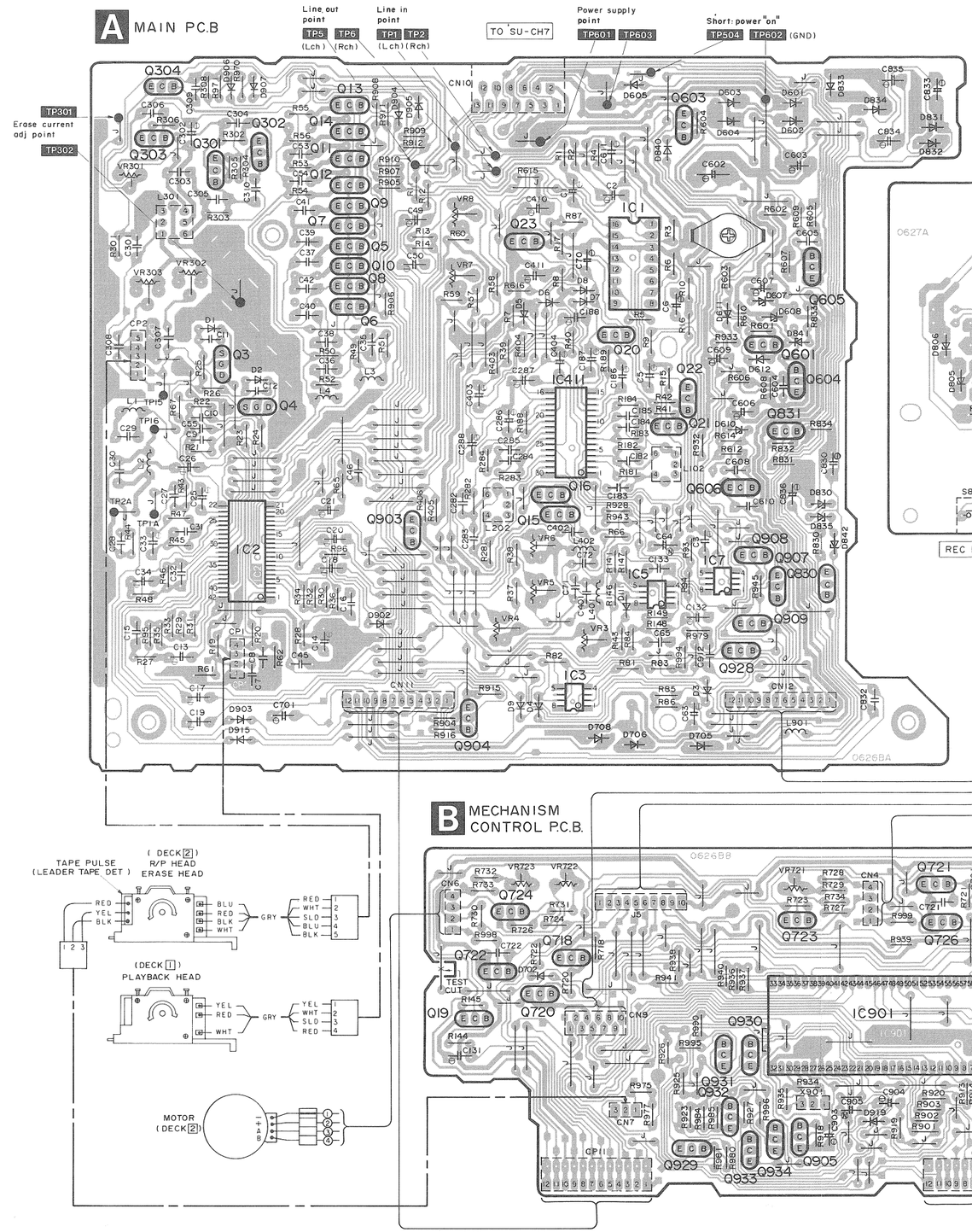

AGRAM

(Parts list on pages 25~28)

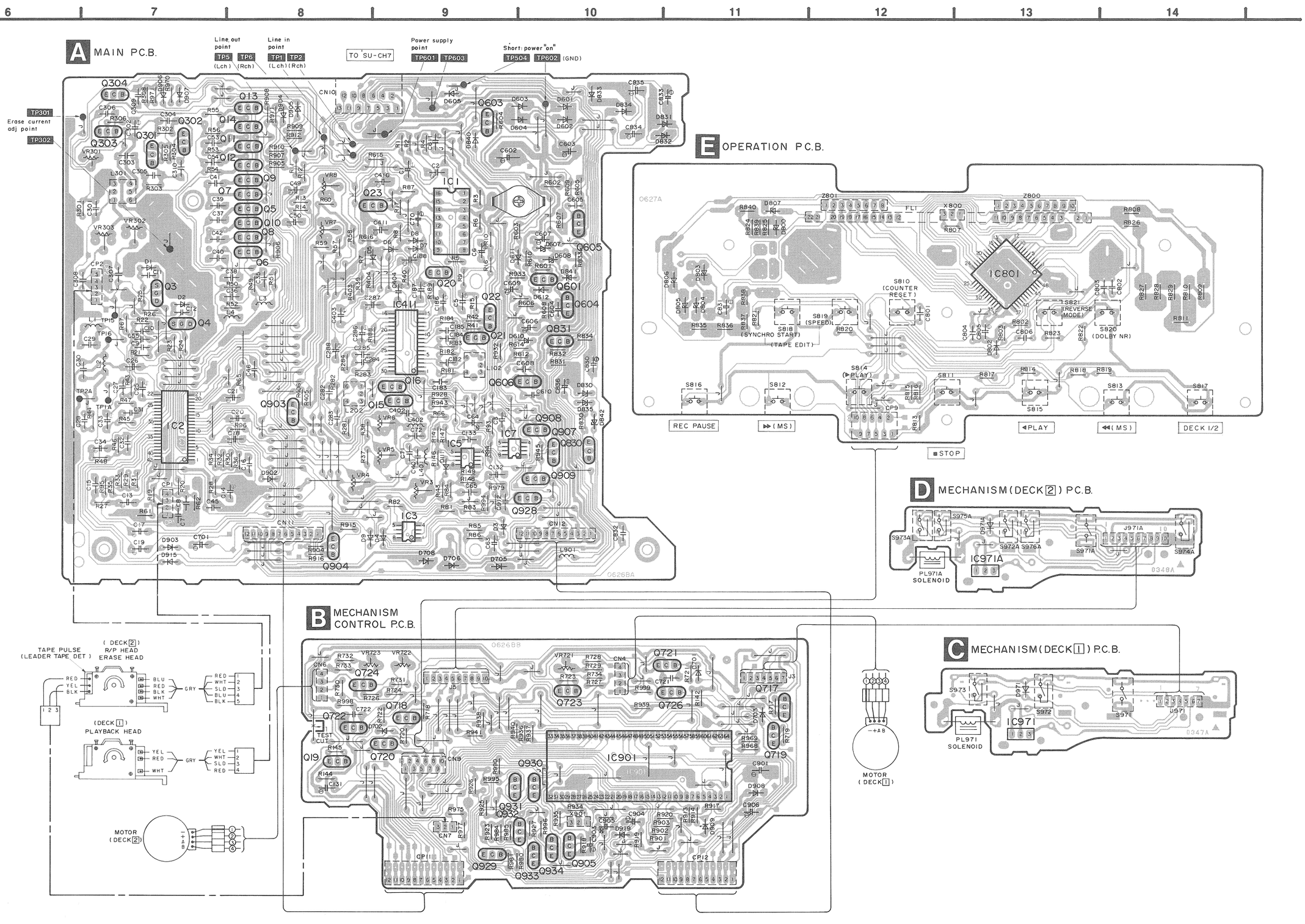

ack	ORG	Orange	
ue	PNK	Pink	
rown	RED	Red	
ray	SLD	Shield Wire	
reen	VLT	Violet	
ght Blue	WHT	White	
	YEL	Yellow	

■ FUNCTION OF IC TERMINALS

•IC801 (LC6512A–4604)

Pin No.	Mark	I/O Division	Function
1	PB3	I	Serial data input
2	PC0	I/O	Deck 2 Rotation pulse signal of reel table
3	PC1	I/O	Deck 1 Rotation pulse signal of reel table
4 ~ 10	——	——	Connected to GND
11 ~ 14	PE0 ~ PE3	O	FL port signal output
15	$\overline{RES}$	I	Reset terminal
16	TEST	——	Connected to GND
17	VSS		
18	NC	——	Not connected
19			
20	OSC1	I/O	Connected to ceramic oscillator (X800)
21	OSC2		

Pin No.	Mark	I/O Division	Function
22 ~ 25	PF0 ~ PF3	O	FL port signal output
26 ~ 29	PG0 ~ PG3	O	FL grid signal output
30	NC	——	Not connected
31 ~ 34	PH0 ~ PH3	O	FL grid signal output
35 • 36	P10 • P11	——	Not connected
37	$\overline{HOLD}$		
38	$\overline{INT}$	——	Connected to GND
39	VDD	I	Power supply (+5.6 V)
40 ~ 47	——	——	Connected to GND
48	PB2	I	Counter reset terminal

•IC901 (M50963-236SP)

Pin No.	Mark	I/O Division	Function
1	VCC	I	Power supply (+5 V)
2	AVSS	——	Connected to GND
3	VREF	I	Reference voltage input (+5 V)
4	NC	——	Not connected
5	$\overline{PWN}$	O	Control voltage terminal of electric volume
6	NC	——	Not connected
7			
8	RMT2	O	Rec, amp, mute signal of deck 2 "L" level in mute is off mode "H" level in mute is on mode
9	LMT	O	Line out mute signal
10	VR IN	I	Not used and connected to resistance
11	RLV	I	Recording level detection (at ATLS position)

Pin No.	Mark	I/O Division	Function
12	KEY2	I	Key switch input Pin 13 is not used and connected to resistance
13	KEY1		
14	QUICK2	O	Pin 15 is not used and connected to resistance
15	QUICK1		
16	$\overline{ARM2}$	I	Mute key input Not used ad connected to resistance
17	NC	——	Not connected
18	$\overline{REC2}$	I	Recording bias control voltage terminal "L" level when is on "H" level when is off
19	NC	——	Not connected
20			
21	POWER IN	I	Power ON/OFF detection terminal
22	CLK IN	I	Clock input for serial data
23	$\overline{CLK\ OUT}$	O	Clock output for serial data

Pin No.	Mark	I/O Division	Function
24	DATA IN	I	Serial data input
25	$\overline{DATA\ OUT}$	O	Serial data output
26	NC	——	Connected to Vss
27	CNVSS	——	Conencted to Vss
28	$\overline{RESET}$	I	Reset terminal "L" level when reset is off mode "L"→"H" level when reset is on mode
29	X IN	I	Clock OSC terminal Connected to crystal oscillator
30	X OUT	O	
31	NC	——	Not used
32	Vss	——	Connected to GND
33	$\overline{TEST}$	——	Test terminal ("L" level)
34	PW IN	I	Not used
35	REEL2	I	Deck 2 Rotation pulse signal of reel table
36	REEL1	I	Deck 1 Rotation pulse signal of reel table
37	RINH2	I	Deck 2 Reverse Rec. Inh. switch select terminal
38	FINH2	I	Deck 2 Forward Rec. Inh. switch select terminal
39	MODE2	I	Deck 2 mechanism mode switch select terminal
40	HALF2	I	Deck 2 cassette half detection switch "L" level in half detection switch is on mode. "H" level in half detection switch is off mode.
41	MPX	——	Not used
42	$\overline{T2}$	O	Deck 2 play select signal "L" level with PLAY mode.
43	$\overline{X2}$	O	X2 Speed LED display "L" level when LED is on mode
44	$\overline{X1}$	O	Not used
45	$\overline{VIA}$	——	

Pin No.	Mark	I/O Division	Function
46	$\overline{C}$	O	Dolby C LED display "L" level when LED is on mode "H" level when other mode
47	B	O	
48	$\overline{ENC}$	O	Encode/Decode select signal "L" level in encode mode "H" level in decode mode
49	KEY T/$\overline{S}$	——	Not use and connected to GND
50	PW OFF	——	Not used
51	SEREAL	O	Control for FL micro computer Serial data output
52	$\overline{PLAY}$	O	Not used
53	DIR	O	
54	$\overline{MSP}$	O	Music search signal detection terminal
55	⇄	O	Not used
56	⊂⊃	O	
57	⊂⊃	O	
58	SOL2	O	Deck 2 Solenoid control signal "H" level when solenoid is on mode "L" level when solenoid is off mode
59	MOTOR2	O	Deck 2 Motor control signal "H" level when motor is on mode "L" level when motor is off mode
60	MODE1	I	Deck 1 mechanism mode switch select terminal
61	HALF1	I	Deck 1 cassette half detection switch "L" level in half detection switch is on mode "H" level in half detection switch is off mode
62	SOL1	O	Deck 1 Solenoid control signal "H" level when solenoid is on mode "L" level when solenoid is off mode
63	HISP	O	Motor speed control signal "L" level when normal speed "H" level when high speed
64	MOTOR1	O	Deck 1 Motor control signal "H" level when motor is on mode "L" level when motor is off mode

■ REPLACEMENT PARTS LIST

Notes : * Important safety notice:
Components identified by ⚠ mark have special characteristics important for safety. When replacing any of these components use only manufacturer's specified parts.
* The parenthesized indications in the Remarks columns specify the areas. (Refer to the cover page for area.)
Parts without these indications can be used for all areas.

Ref. No.	Part No.	Part Name & Description	Remarks
		INTEGRATED CIRCUIT(S)	
IC1	AN7384N	I. C, ELECTRIC VOLUME	
IC2	AN7351SCE2	I. C, PLAYBACK/REC. AMP.	
IC3	SVIBA4558F	I. C, REC. LEVEL DET.	
IC5	SVIBA4558F	I. C, MUSIC SEL. AMP.	
IC7	SVIBA4558F	I. C, REC. LEVEL CONT.	
IC411	CXA1331M-T6	I. C, DOLBY NR(B/C)	
IC801	LC6512A-4604	I. C, FL DRIVE	
IC901	M50963-238SP	I. C, MICROCOMPUTER	
IC971	DN6851ALB	I. C, HALL	
IC971A	DN6851ALB	I. C, HALL	
		TRANSISTOR(S)	
Q3, 4	2SJ164PQRTA	TRANSISTOR	
Q5-8	MSA1048ABCTA	TRANSISTOR	
Q9	MSC2458ABCTA	TRANSISTOR	
Q10-14	MSC2458ABCTA	TRANSISTOR	
Q15, 16	2SD1450STTA	TRANSISTOR	
Q19	MSC2458ABCTA	TRANSISTOR	
Q20-22	2SC3312STTA	TRANSISTOR	
Q23	DTC124EST	TRANSISTOR	
Q301, 302	MSC2458ABCTA	TRANSISTOR	
Q303	2SB621A-R	TRANSISTOR	
Q304	2SD592NCR	TRANSISTOR	
Q601	2SB1036RSTA	TRANSISTOR	
Q603	MSC2458ABCTA	TRANSISTOR	
Q604	2SD2037EFTA	TRANSISTOR	
Q605	2SB1357EFTA	TRANSISTOR	
Q606	2SD1862QRTV6	TRANSISTOR	
Q717, 718	2SB1030QTA	TRANSISTOR	
Q719, 720	DTC114ESTP	TRANSISTOR	
Q721, 722	2SD1302STTA	TRANSISTOR	
Q723, 724	MSA1048ABCTA	TRANSISTOR	
Q726	DTC114ESTP	TRANSISTOR	
Q830	2SB1236PQRT6	TRANSISTOR	
Q831	2SD1512R	TRANSISTOR	
Q903	DTA114ESTP	TRANSISTOR	
Q904	2SB1030QTA	TRANSISTOR	
Q905	MSC2458ABCTA	TRANSISTOR	
Q907-909	DTA114ESTP	TRANSISTOR	
Q928	DTA114ESTP	TRANSISTOR	
Q929	MSC2458ABCTA	TRANSISTOR	
Q930	DTA114ESTP	TRANSISTOR	
Q931	DTC144EKT96	TRANSISTOR	

Ref. No.	Part No.	Part Name & Description	Remarks
Q932	MSC2458ABCTA	TRANSISTOR	
Q933	DTA114ESTP	TRANSISTOR	
Q934	DTC144EKT96	TRANSISTOR	
		DIODE(S)	
D1, 2	MA167	DIODE	
D3-8	1SS254TA	DIODE	
D9	MA700TA	DIODE	
D111	1SS254TA	DIODE	
D601-604	1SR35200TB	DIODE	⚠
D605	1SS254TA	DIODE	
D607	MA4091LTA	DIODE	
D608	MA4091-M	DIODE	
D610	MA4062	DIODE	
D611, 612	MA167	DIODE	
D701-703	1SS254TA	DIODE	
D705, 706	1SR35200TB	DIODE	⚠
D708	1SR35200TB	DIODE	⚠
D800	MA4030LTA	DIODE	
D802	1SS254TA	DIODE	
D803-805	MA4047MTA	DIODE	
D806	MA4036MTA	DIODE	
D807	MA4039MTA	DIODE	
D830	MA4100MTA	DIODE	
D831, 832	1SR35200TB	DIODE	⚠
D833	SVD1SR35200A	DIODE	
D834	1SR35200TB	DIODE	⚠
D835	MA4100MTA	DIODE	
D840	MA167	DIODE	
D841	MA4100MTA	DIODE	
D842	MA4056MTA	DIODE	
D902-907	1SS254TA	DIODE	
D908	1SR35200TB	DIODE	⚠
D909	1SS254TA	DIODE	
D915	1SS254TA	DIODE	
D919	1SS254TA	DIODE	
D971A	RVD1SS133TA	DIODE	
D971	RVD1SS133TA	DIODE	
		VARIABLE RESISTOR(S)	
VR3-6	EVNDXAA00B24	V. R, PLAYBACK GAIN ADJ.	
VR7, 8	EVNDXAA00B14	V. R, REC. /PLAY LEVEL ADJ.	
VR301	EVNDXAA00B53	V. R, ERASE CURRENT ADJ.	
VR302, 303	EVNDXAA00B15	V. R, OVERALL GAIN ADJ.	
VR721-723	EVNDCAA03B53	V. R, TAPE SPEED ADJ.	

Ref. No.	Part No.	Part Name & Description	Remarks
		COMPONENT COMBINATION(S)	
Z800	EXBF10E104J	COMPONENT COMBINATION	
Z801	EXBF8E104J	COMPONENT COMBINATION	
		COIL(S)	
L1, 2	SLQX303-1KT	COIL	
L3, 4	SLQX272-1YT	COIL	
L102	RLM2B005-1M	COIL	
L202	RLM2B005-1M	COIL	
L301	SL09B4-K	COIL	
L401, 402	SLQX272-1YT	COIL	
L901	ELEXT101KA9	COIL	
		OSCILLATOR(S)	
X800	EFOGC3004T4	OSCILLATOR	
X901	EFOGC4004A4	OSCILLATOR	
		DISPLAY	
FL1	RSL0088-F	DISPLAY	
		SWITCH(ES)	
S810	EVQ21405R	SW, COUNTER RESET	
S811	EVQ21405R	SW, STOP	
S812	EVQ21405R	SW, MS	
S813	EVQ21405R	SW, MS	
S814	EVQ21405R	SW, PLAY	
S815	EVQ21405R	SW, PLAY	
S816	EVQ21405R	SW, REC PAUSE	
S817	EVQ21405R	SW, DECK 1/2	
S818	EVQ21405R	SW, SYNCHRO START	
S819	EVQ21405R	SW, SEED	
S820	EVQ21405R	SW, DOLBY NR	
S821	EVQ21405R	SW, REVERSE MODE	
S971	RSH1A89Z	SW, MODE (DECK1)	
S971A	RSH1A89Z	SW, MODE (DECK2)	
S972	RSH1A90YB-U	SW, HALF (DECK1)	
S972A	RSH1A90YB-U	SW, HALF (DECK2)	
S973	RSH1A90YB-U	SW, ATS/Cr02 (DECK1)	
S973A	RSH1A90YB-U	SW, R. REC INH(DECK2)	
S974A	RSH1A90YB-U	SW, F. REC INH(DECK2)	
S975A	RSH1A90YB-U	SW, ATS/Cr02 (DECK2)	
S976A	RSH1A90YB-U	SW, ATS/METAL (DECK2)	
		CONNECTOR(S)	
J3	RJS7T47A	SOCKET(7P)	

Ref. No.	Part No.	Part Name & Description	Remarks
J5	SJSD1005	CONNECTOR(10P)	
CN4	RJS1A1704	SOCKET(4P)	
CN6	RJS1A1704	SOCKET(4P)	
CN7	SJTD313	CONNECTOR(3P)	
CN9	RJS10Q8ZA	SOCKET(10P)	
CN10	RJT055B013	CONNECTOR(13P)	
CN11, 12	RJT057W012-1	CONNECTOR(12P)	
CP1	SJTD413	CONNECTOR(4P)	
CP2	RJP5G18ZA	CONNECTOR(5P)	
CP9	RJS10Q9ZA	SOCKET(10P)	
CP11, 12	RJU057W012	SOCKET(12P)	

Notes : * Capacity valuse are in microfarads (uF) unless specified otherwise, P=Pico-farads(pF) F=Farads(F)
* Resistance values are in ohms, unless specified otherwise, 1K=1,000(OHM) , 1M=1,000k(OHM)

Ref. No.	Part No.	Values & Remarks
		RESISTORS
R1, 2	ERDS2TJ393	1/4W 39K
R3, 4	ERDS2TJ183T	1/4W 18K
R5, 6	ERDS2TJ562	1/4W 5.6K
R7, 8	ERDS2TJ223	1/4W 22K
R9	ERDS2TJ332	1/4W 3.3K
R10	ERDS2TJ332	1/4W 3.3K
R11, 12	ERDS2TJ1R0	1/4W 1.0
R13, 14	ERDS2TJ152	1/4W 1.5K
R15, 16	ERDS2TJ273	1/4W 27K
R17	ERDS2TJ472	1/4W 4.7K
R19, 20	ERDS2TJ101	1/4W 100
R21, 22	ERDS2TJ104	1/4W 100K
R23, 24	ERDS2TJ101	1/4W 100
R25, 26	ERDS2TJ225	1/4W 2.2M
R27, 28	ERDS2EJ820	1/4W 82
R29, 30	ERDS2TJ103	1/4W 10K
R31, 32	ERDS2TJ273	1/4W 27K
R33, 34	ERDS2TJ183T	1/4W 18K
R35, 36	ERDS2TJ474	1/4W 470K
R37, 38	ERDS2TJ272T	1/4W 2.7K
R39, 40	ERDS2TJ332	1/4W 3.3K
R41, 42	ERDS2TJ223	1/4W 22K
R43, 44	ERDS2TJ103	1/4W 10K
R45, 46	ERDS2TJ223	1/4W 22K
R47, 48	ERDS2TJ472	1/4W 4.7K
R49, 50	ERDS2TJ821	1/4W 820
R51, 52	ERDS2TJ470	1/4W 47
R53-56	ERDS2TJ222	1/4W 2.2K
R57, 58	ERDS2TJ103	1/4W 10K
R59, 60	ERDS2TJ332	1/4W 3.3K
R61, 62	ERDS2TJ473	1/4W 47K
R65	ERDS2TJ392T	1/4W 3.9K
R66	ERDS2TJ682T	1/4W 6.8K
R67	ERDS2TJ223	1/4W 22K
R81, 82	ERDS2TJ683	1/4W 68K
R83, 84	ERDS2TJ103	1/4W 10K
R85	ERDS2TJ101	1/4W 100
R86	ERDS2TJ473	1/4W 47K
R87	ERDS2TJ103	1/4W 10K
R93	ERDS2TJ273	1/4W 27K
R94	ERDS2TJ123	1/4W 12K
R95, 96	ERDS2TJ153	1/4W 15K
R141	ERDS2TJ393	1/4W 39K
R142	ERDS2TJ222	1/4W 2.2K
R143	ERDS2TJ102	1/4W 1K
R144	ERDS2TJ473	1/4W 47K

Ref. No.	Part No.	Values & Remarks
R145	ERDS2TJ153	1/4W 15K
R146	ERDS2TJ822	1/4W 8.2K
R147	ERDS2TJ823T	1/4W 82K
R148	ERDS2TJ331	1/4W 330
R149	ERDS2TJ332	1/4W 3.3K
R181	ERDS2TJ102	1/4W 1K
R182	ERDS2TJ222	1/4W 2.2K
R183	ERDS2TJ243T	1/4W 24K
R184	ERDS2TJ561	1/4W 560
R188	ERDS2TJ151	1/4W 150
R189	ERDS2TJ273	1/4W 27K
R281	ERDS2TJ102	1/4W 1K
R282	ERDS2TJ222	1/4W 2.2K
R283	ERDS2TJ243T	1/4W 24K
R284	ERDS2TJ561	1/4W 560
R301	ERDS2TJ1R0	1/4W 1.0
R302, 303	ERDS2TJ183T	1/4W 18K
R304, 305	ERDS2TJ100	1/4W 10
R306	ERDS2TJ561	1/4W 560
R308	ERDS2TJ561	1/4W 560
R403, 404	ERDS2TJ472	1/4W 4.7K
R405, 406	ERDS2TJ682T	1/4W 6.8K
R601, 602	ERDS2TJ472	1/4W 4.7K
R603	ERDS2TJ103	1/4W 10K
R604	ERDS2TJ472	1/4W 4.7K
R605, 606	ERD2FCVJ4R7T	1/4W 4.7 ⚠
R607	ERDS1FVJ331T	1/2W 330 ⚠
R608	ERDS1FVJ271T	1/2W 270 ⚠
R609, 610	ERDS2TJ472	1/4W 4.7K
R612	ERD2FCVG150T	1/4W 15 ⚠
R614	ERDS2TJ102	1/4W 1K
R615, 616	ERDS2TJ101	1/4W 100
R717, 718	ERDS2TJ223	1/4W 22K
R719-722	ERDS2TJ821	1/4W 820
R723, 724	ERDS2TJ184T	1/4W 180K
R726	ERDS2TJ103	1/4W 10K
R727	ERDS2TJ153	1/4W 15K
R728	ERDS2TJ392T	1/4W 3.9K
R729, 730	ERDS2TJ103	1/4W 10K
R731	ERDS2TJ332	1/4W 3.3K
R732	ERDS2TJ392T	1/4W 3.9K
R733	ERDS2TJ103	1/4W 10K
R734	ERDS2TJ221	1/4W 220
R802	ERDS2TJ102	1/4W 1K
R803	ERDS2TJ103	1/4W 10K
R807	ERDS2TJ105T	1/4W 1M
R808-811	ERDS2TJ221	1/4W 220
R813	ERDS2TJ821	1/4W 820
R814	ERDS2TJ102	1/4W 1K

Ref. No.	Part No.	Values & Remarks
R815	ERDS2TJ122	1/4W 1.2K
R816	ERDS2TJ152	1/4W 1.5K
R817	ERDS2TJ182	1/4W 1.8K
R818	ERDS2TJ222	1/4W 2.2K
R819	ERDS2TJ332	1/4W 3.3K
R820	ERDS2TJ472	1/4W 4.7K
R821	ERDS2TJ682T	1/4W 6.8K
R822	ERDS2TJ123	1/4W 12K
R823	ERDS2TJ223	1/4W 22K
R824-829	ERDS2TJ221	1/4W 220
R830	ERD2FCVG270T	1/4W 27 ⚠
R831	ERDS1FVJ471T	1/2W 470 ⚠
R832	ERDS2TJ103	1/4W 10K
R833	ERDS2TJ223	1/4W 22K
R834-840	ERDS2TJ221	1/4W 220
R901-903	ERDS2TJ103	1/4W 10K
R904	ERDS2TJ152	1/4W 1.5K
R905	ERDS2TJ222	1/4W 2.2K
R906	ERDS2TJ103	1/4W 10K
R907	ERDS2TJ563	1/4W 56K
R908-910	ERDS2TJ103	1/4W 10K
R911	ERDS2TJ392T	1/4W 3.9K
R912	ERDS2TJ272T	1/4W 2.7K
R913	ERDS2TJ123	1/4W 12K
R914	ERDS2TJ103	1/4W 10K
R915	ERDS2TJ683	1/4W 68K
R916	ERDS2TJ472	1/4W 4.7K
R917, 918	ERDS2TJ103	1/4W 10K
R919	ERDS2TJ471	1/4W 470
R920	ERDS2TJ103	1/4W 10K
R923	ERDS2TJ470	1/4W 47
R925	ERDS2TJ223	1/4W 22K
R926	ERDS2TJ470	1/4W 47
R927	ERDS2TJ223	1/4W 22K
R928	ERDS2TJ103	1/4W 10K
R932	ERDS2TJ183T	1/4W 18K
R933	ERDS2TJ223	1/4W 22K
R934	ERDS2TJ105T	1/4W 1M
R935	ERDS2TJ182	1/4W 1.8K
R936-939	ERDS2TJ103	1/4W 10K
R940, 941	ERDS2TJ472	1/4W 4.7K
R943	ERDS2TJ103	1/4W 10K
R945	ERDS2TJ822	1/4W 8.2K
R968, 969	ERDS2TJ472	1/4W 4.7K
R970	ERDS2TJ681	1/4W 680
R971	ERDS2TJ391	1/4W 390
R975	ERDS2TJ331	1/4W 330
R977	ERDS2TJ103	1/4W 10K
R979	ERDS2TJ153	1/4W 15K

Ref. No.	Part No.	Values & Remarks
R980, 981	ERDS2TJ393	1/4W 39K
R984, 985	ERDS2TJ393	1/4W 39K
R990	ERDS2TJ100	1/4W 10
R994	ERDS2TJ102	1/4W 1K
R995, 996	ERDS2TJ470	1/4W 47
R998, 999	ERDS2TJ2R7T	1/4W 2.7
		CAPACITORS
C1-3	ECEA1HKA010B	50V 1U
C5, 6	ECEA1CU220	16V 22U
C7-9	ECBT1H561KB5	50V 560P
C10	ECBT1H561KB5	50V 560P
C11, 12	ECBT1H102KB5	50V 1000P
C13, 14	ECEA0JKA101B	6.3V 100U
C15, 16	ECQB1H682JZ3	50V 6800P
C17-20	ECEA1EKA4R7B	25V 4.7U
C21	ECEA0JKA101B	6.3V 100U
C25, 26	ECEA1HKA010B	50V 1U
C27, 28	ECBT1H561KB5	50V 560P
C29, 30	ECKR2H121KB5	500V 120P
C31, 32	ECCR1H181K5	50V 180P
C33, 34	ECEA1HKAR47B	50V 0.47U
C35, 36	ECFR1C272JR	16V 2700P
C37, 38	ECFR1C183JR	16V 0.018U
C39, 40	ECFR1C103JR	16V 0.01U
C41, 42	ECFR1C333JR	16V 0.033U
C45, 46	ECKR1H103ZF5	50V 0.01U
C49, 50	ECEA1CKA100B	16V 10U
C53, 54	ECFR1C222JR	16V 2200P
C55	ECBT1H102KB5	50V 1000P
C63	ECEA1CKA100B	16V 10U
C64	ECEA1HN010	50V 1U
C65	ECFR1C103JR	16V 0.01U
C70	ECEA1EKA4R7B	25V 4.7U
C71, 72	ECBT1C332KR5	16V 3300P
C131	ECEA1HK2R2B	50V 2.2U
C132	ECEA1HKA3R3B	50V 3.3U
C133	ECCR1H470K5	50V 47P
C182	ECBT1C682KR5	16V 6800P
C183	ECBA1H681KB5	50V 680P
C184, 185	ECBT1C222JR5	16V 2200P
C186	ECEA1HUR56B	50V 0.56U
C187	ECEA1HKR33	50V 0.33U
C188	ECEA1EKA4R7B	25V 4.7U
C282	ECBT1C682KR5	16V 6800P
C283	ECBA1H681KB5	50V 680P
C284, 285	ECBT1C222JR5	16V 2200P
C286	ECEA1HUR56B	50V 0.56U
C287	ECEA1HKR33	50V 0.33U
C288	ECEA1EKA4R7B	25V 4.7U
C301	ECQP1153JZ	100V 0.015U

Ref. No.	Part No.	Values & Remarks
C302	ECEA1CU221	16V 220U
C303	ECKR1H392KB5	50V 3900P
C304, 305	ECFR1E222KV	25V 2200P
C306	ECKR1H103ZF5	50V 0.01U
C307, 308	ECBT1H221KB5	50V 220P
C309	ECKR1H103ZF5	50V 0.01U
C310	ECFR1E682KV	25V 6800P
C401, 402	ECBT1C152JR5	16V 1500P
C403, 404	ECEA1EKA4R7B	25V 4.7U
C410, 411	ECEA1AU471	10V 470U
C602	ECEA1EU222B	25V 2200U
C603	ECEA1EU102B	25V 1000U
C604, 605	ECBT1C103MS5	16V 0.01U
C606, 607	ECEA1AU101	10V 100U
C608	ECBT1C103MS5	16V 0.01U
C609	ECEA1AU470	10V 47U
C610	ECKR1H103ZF5	50V 0.01U
C611	ECEA1AU470	10V 47U
C701	ECEA1EU101	25V 100U
C721, 722	ECFR1H104ZF	50V 0.1U
C801-804	ECBT1C103MS5	16V 0.01U
C805	ECEA0JKS101B	6.3V 100U
C806	ECBT1C103MS5	16V 0.01U
C830	ECA2AM101B	100V 100U
C831	ECEA1VKS470Q	35V 47U
C832	ECFR1H104ZF	50V 0.1U
C833	ECA1HM471B	50V 470U
C834	ECEA1EU221	25V 220U
C835	ECA1JM101B	63V 100U
C836	ECEA1VKA330B	35V 33U
C901	ECEA0JU102	6.3V 1000U
C903	ECEA1HKA010B	50V 1U
C904	ECEA1EKA4R7B	25V 4.7U
C905	ECEA1HSN2R2B	50V 2.2U
C906	ECEA0JU471	6.3V 470U
C912	ECKT1H122KB	50V 1200P

■ MECHANISM PARTS LOCATION •DECK 1

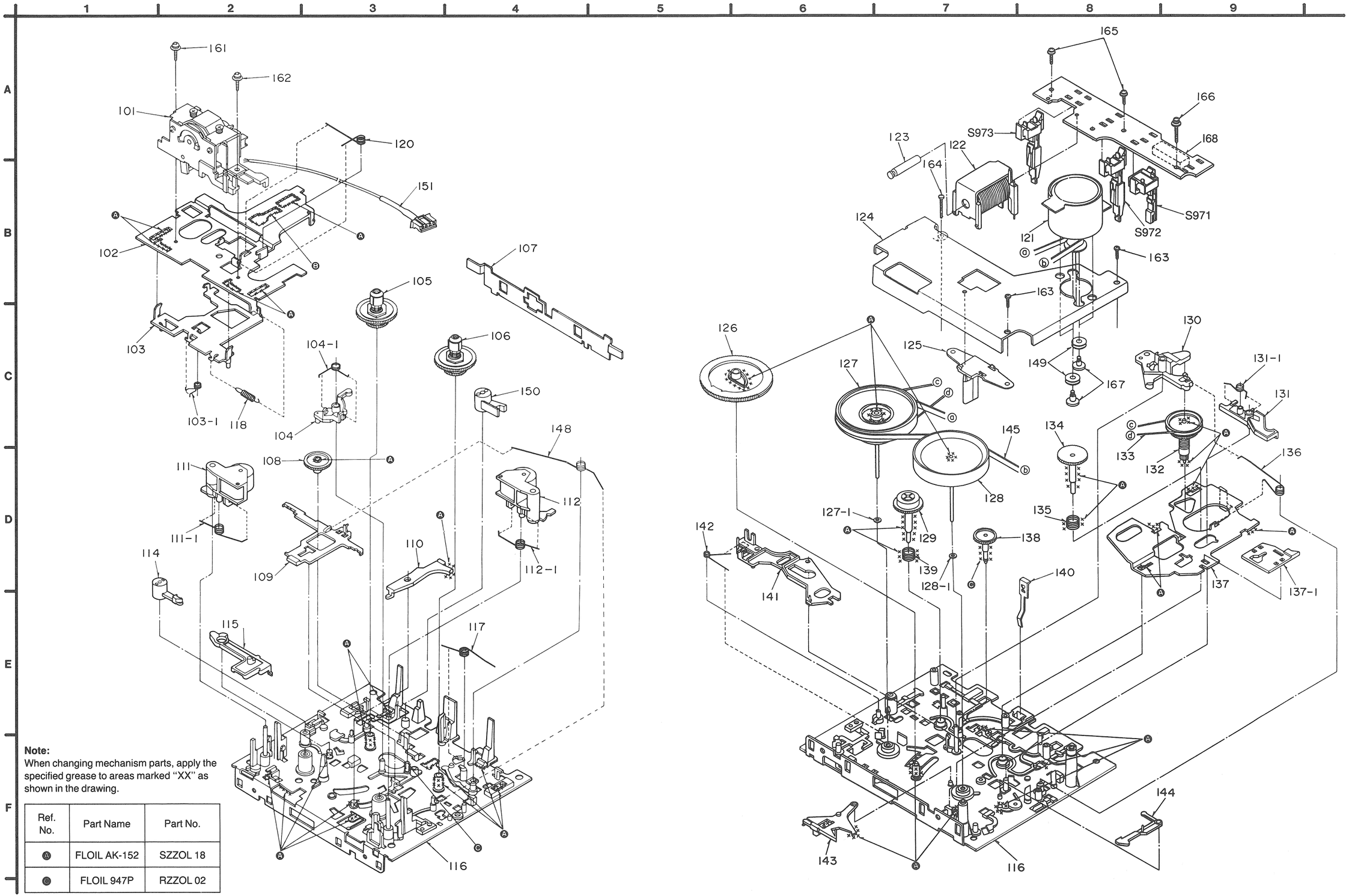

Note:
When changing mechanism parts, apply the specified grease to areas marked "XX" as shown in the drawing.

Ref. No.	Part Name	Part No.
Ⓐ	FLOIL AK-152	SZZOL 18
Ⓒ	FLOIL 947P	RZZOL 02

Ref. No.	Part No.	Part Name & Description	Remarks
		MECHANISM PARTS LIST	
(DECK1)			
101	RXQ0051-1	HEAD BLOCK(PLAY)	
102	RUA793ZF	HEAD BASE	
103	RZLAR300A	ROD	
103-1	RUW143ZA	SPRING	
104	1UB0089ZA	ARM	
104-1	RUW148ZA	SPRING	
105	1DM0018ZB	REEL TABLE(R)	
106	1DM0017ZB	REEL TABLE(F)	
107	RML0069-1	LEVER	
108	RDG5772ZC	GEAR	
109	RUB508ZB	BRAKET ROD	
110	RUB506ZB	LEVER	
111	1UB0088ZB	ARM(R)	
111-1	RUW141ZA	SPRING	
112	1UB0087ZB	ARM(F)	
112-1	RUW140ZC	SPRING	
114	RNL1ZD	DAMPER ARM	
115	RUB503ZD	MAIN LEVER	
116	RFKRRSCH9N	CHASSIS ASS'Y	
117	RUW142ZA	SPRING	
118	RUD105ZA	SPRING	
120	RUW139ZA	SPRING	
121	RFKPRSCH9N	DC MOTOR ASS'Y	
122	1UE0015ZB	PLUNGER	
123	RUB428ZE	MOVING IRON CORE	
124	RMA0101	ANGLE	
125	RMD5014ZC	ANGLE	
126	RDG5927ZG	MAIN GEAR	
127	1DW0037ZB	FLYWHEEL(F)	
127-1	RNW139ZA	WASHER	
128	1DW0038ZB	FLYWHEEL(R)	
128-1	RNW138ZA	WASHER	
129	1DG0006ZB	REEL TABLE GEAR	
130	RUB513ZD	ARM	
131	1UB0091ZA	LEVER	
131-1	RUW146ZA	SPRING	
132	1DR0011ZB	MAIN PULLEY	
133	RDV90ZB	BELT	
134	RDG5769ZA	REEL TABLE GEAR	
135	RUQ111ZB	SPRING	
136	RUW145ZA	SPRING	
137	1UB0090ZA	ROD	
137-1	RUB512ZB	ROD	
138	RDG5773ZB	GEAR	
139	RUQ112ZA	SPRING	
140	RUS609ZC	TAPE PRESSURE SPRING	
141	RUB514ZC	LEVER	
142	RUW147ZA	SPRING	
143	RUB515ZA	LEVER	

Ref. No.	Part No.	Part Name & Description	Remarks
144	RUB509ZA	LEVER	
145	RDV108ZA	CAPSTAN BELT	
148	RUW144ZA	SPRING	
149	RHG3032ZA	RUBBER CUSHION	
150	RNL180ZB	DAMPER ARM	
151	REX0132	LEAD WIRE(4P)	
161	XTW2+6L	SCREW	
162	XTW2+8L	SCREW	
163	XTN26+7J	SCREW	
164	RHE5203ZA	SCREW	
165	XTW2+8S	SCREW	
166	XYC2+JF16	SCREW	
167	RHD26002	SCREW	
168	RJS7T7ZA	CONNECTOR(7P) J971	

Ref. No.	Part No.	Part Name & Description	Remarks
		MECHANISM PARTS LIST	
(DECK2)			
201	RXQ0161	HEAD BLOCK(REC/PLAYBACK)	
202	RUA793ZF	HEAD BASE	
203	RZLAR300A	ROD	
203-1	RUW143ZA	SPRING	
204	1UB0089ZA	ARM	
204-1	RUW148ZA	SPRING	
205	1DM0018ZB	REEL TABLE(R)	
206	1DM0017ZB	REEL TABLE(F)	
207	RML0069-1	LEVER	
208	RDG5772ZC	GEAR	
209	RUB508ZB	BRAKET ROD	
210	RUB506ZB	LEVER	
211	1UB0088ZB	ARM(R)	
211-1	RUW141ZA	SPRING	
212	1UB0087ZB	ARM(F)	
212-1	RUW140ZC	SPRING	
214	RNL1ZD	DAMPER ARM	
215	RUB503ZD	MAIN LEVER	
216	RFKRRSCH9N	CHASSIS ASS'Y	
217	RUW142ZA	SPRING	
218	RUD105ZA	SPRING	
219	RUW144ZA	SPRING	
220	RUW139ZA	SPRING	
221	RFM133ZA	DC MOTOR	
222	1UE0015ZB	PLUNGER	
223	RUB428ZE	MOVING IRON CORE	
224	RMA0101	ANGLE	
225	RMD5014ZC	ANGLE	
226	RDG5927ZG	MAIN GEAR	
227	1DW0037ZB	FLYWHEEL(F)	
227-1	RNW139ZA	WASHER	
228	1DW0038ZB	FLYWHEEL(R)	
228-1	RNW138ZA	WASHER	
229	1DG0006ZB	REEL TABLE GEAR	
230	RUB513ZD	ARM	
231	1UB0091ZA	LEVER	
231-1	RUW146ZA	SPRING	
232	1DR0011ZB	MAIN PULLEY	
233	RDV90ZB	BELT	
234	RDG5769ZA	REEL TABLE GEAR	
235	RUQ111ZB	SPRING	
236	RUW145ZA	SPRING	
237	1UB0090ZA	ROD	
237-1	RUB512ZB	ROD	
238	RDG5773ZB	GEAR	
239	RUQ112ZA	SPRING	
240	RUS609ZC	TAPE PRESSURE SPRING	
241	RUB514ZC	LEVER	
242	RUW147ZA	SPRING	

Ref. No.	Part No.	Part Name & Description	Remarks
243	RUB515ZA	LEVER	
244	RUB509ZA	LEVER	
245	RDV108ZA	CAPSTAN BELT	
249	RHG3032ZA	RUBBER CUSHION	
250	RNL180ZB	DAMPER ARM	
251	REX0172	LEAD WIRE(5P)	
261	XTW2+6L	SCREW	
262	XTW2+8L	SCREW	
263	XTN26+7J	SCREW	
264	RHE5203ZA	SCREW	
265	XTW2+8S	SCREW	
266	XYC2+JF16	SCREW	
267	RHD26002	SCREW	
268	RJS10T7ZA	CONNECTOR(10P) J971A	
269	REX0145	LEAD WIRE ASS'Y	

■ MECHANISM PARTS LOCATION •DECK 2

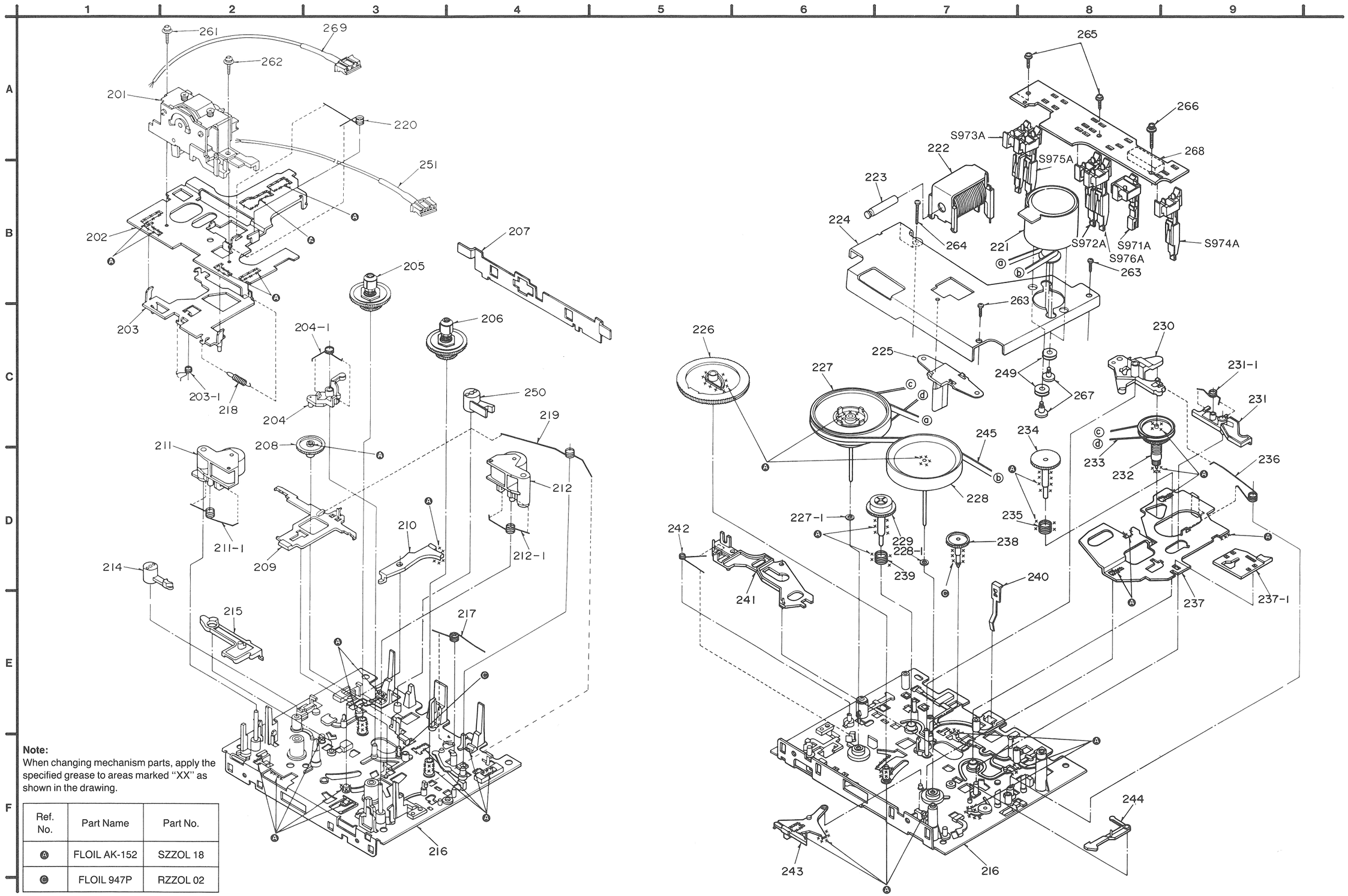

Note:
When changing mechanism parts, apply the specified grease to areas marked "XX" as shown in the drawing.

Ref. No.	Part Name	Part No.
Ⓐ	FLOIL AK-152	SZZOL 18
Ⓒ	FLOIL 947P	RZZOL 02

■ CABINET PARTS LOCATION

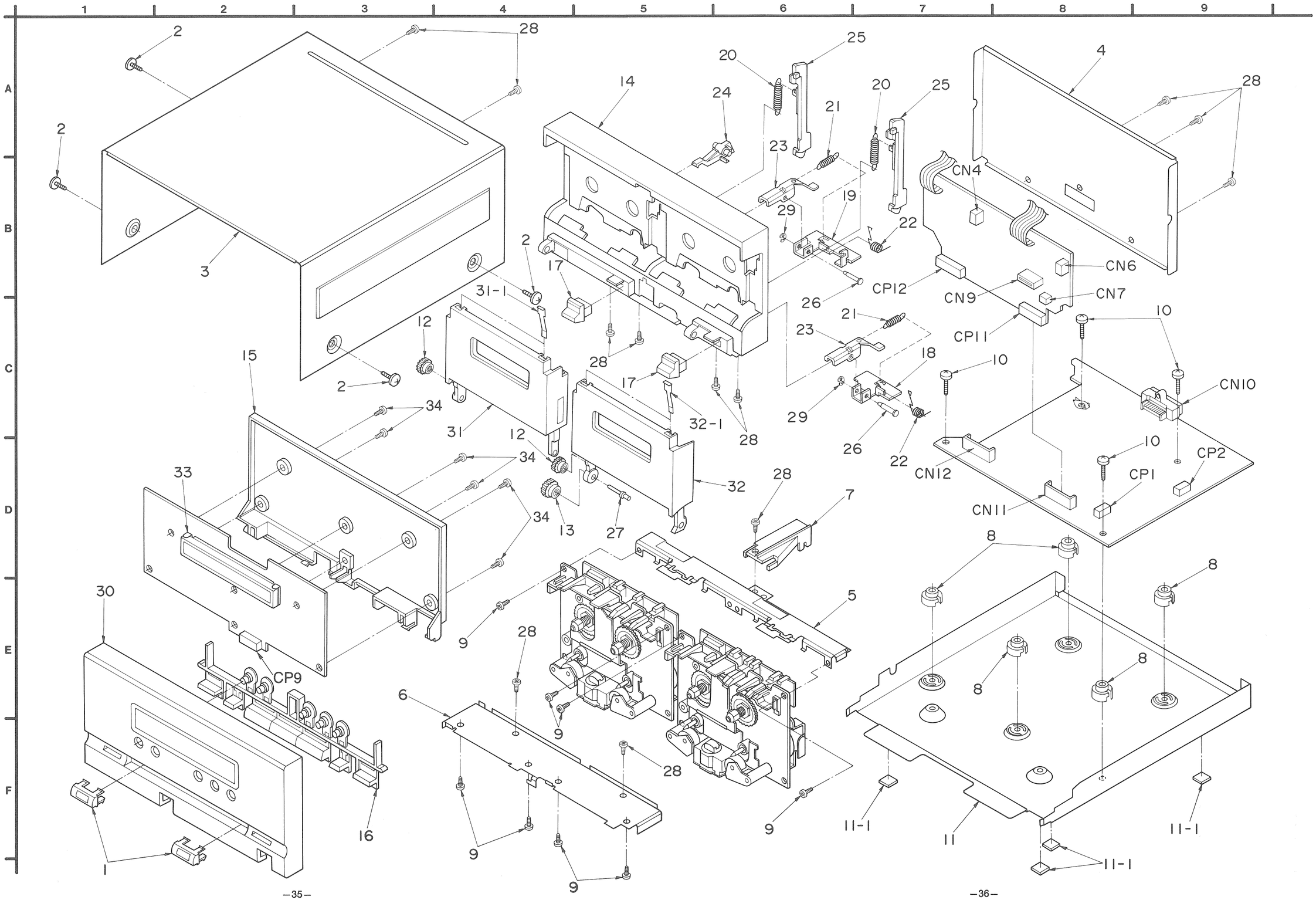

Ref. No.	Part No.	Part Name & Description	Remarks
		CABINET PARTS LIST	
1	RGK0359-K	EJECT BUTTON COVER	
2	RHD30007	SCREW	
3	RKM0105-K	CABINET	
4	RGR0119A-B1	REAR PANEL	
5	RMA0278	ANGLE	
6	RMA0279-2	ANGLE	
7	RMN0127	HOLDER	
8	SHE170-2	SPACER	
9	XTB26+6F	SCREW	
10	XTB3+12JFZ	SCREW	
11	RFKJSCH7N-K	BOTTOM BOARD ASS'Y	
11-1	SHG1654	FOOT	
12	RDG0167	GEAR	
13	RDG0168	GEAR	
14	RGP0198-K	FRONT CABINET	
15	RGP0199-K1	FRONT PANEL COVER	
16	RGU0562-K	BUTTON, OPERATION	
17	RGU0563-K	BUTTON, EJECT	
18	RMA0440	ANGLE	
19	RMA0441	ANGLE	
20	RMB0141-1	SPRING	
21	RMB0160	SPRING	
22	RMB0193	SPRING	
23	RML0221	ANGLE	
24	RML0222	LEVER	
25	RMM0061-1	ROD	
26	RMS0242	SHAFT	
27	RMS0310	SHAFT	
28	XTBS3+8JFZ1	SCREW	
29	XUC2FY-V	E-RING	
30	RFKGSCH7N-K	FRONT PANEL ASS'Y	
31	RFKLSCH7EAK	CASSETTE HOLDER ASS'Y	
31-1	QBP2006A	SPRING	
32	RFKLSCH7EBK	CASSETTE HOLDER ASS'Y	
32-1	QBP2006A	SPRING	
33	RFKNSCH7N-K	FL HOLDER ASS'Y	
34	XTB3+10JFZ	SCREW	

Printed in Japan
F910403120FF/HH/KK/MT

ORDER NO. AD9104084C8

Service Manual

Compact Disc Player

COMPACT disc DIGITAL AUDIO

Compact Disc Player

SL-CH7

Color

(K)	Black Type

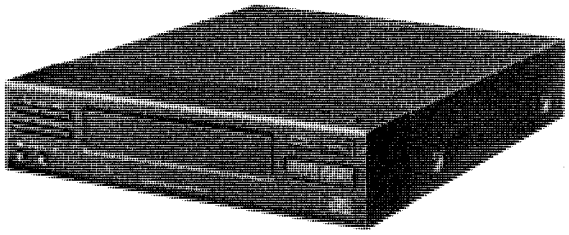

Areas

Country Code	Area	Color
(E)	Continental Europe.	(K)
(GC)	Third Region	

System: SC-CH7

NEW MECHANISM SERIES (S0DD110Z)

Because of unique interconnecting cables, when a component requires service, send or bring in the entire system.

■ SPECIFICATIONS
(DIN 45 500)

■ AUDIO

Frequency response	2 Hz~20 kHz (±1 dB)
Wow and flutter	Below measurable limit

■ PICKUP

Wavelength	780 nm

■ GENERAL

Power consumption	17 W
Dimensions (W×H×D)	215×55×295 mm (8 15/32″×2 5/32″×11 5/6″)
Weight	2.0 kg (4.4 lb.)

Notes:
1. Total harmonic distortion is measured by the digital spectrum analyzer.
2. Specifications are subject to change without notice.
3. Weight and dimensions shown are approximate.

System	Tuner	Amplifier	CD player	Cassette Deck	Speakers
SC-CH7	ST-CH7L	SU-CH7	SL-CH7	RS-CH7	SB-CH7

Technics / Panasonic

(E) (GC)

■ CONTENTS

■ PRECAUTION OF LASER DIODE

CAUTION: This product utilizes a laser diode with the unit turned "on", invisible laser radiation is emitted from the pick up lens.
Wave length: 780 nm
Maximum output radiation power from pick up: 100 μW/VDE

Laser radiation from the pick up lens is safety level, but be sure the followings:

1. Do not disassemble the optical pick up unit, since radiation from exposed laserd diode is dangerous.
2. Do not adjust the variable resistor on the pickup unit. It was already adjusted.
3. Do not look at the focus lens using optical instruments.
4. Recommend not to look at pick up lens for a long time.

ACHTUNG: Dieses produkt enthält eine laserdiode. Im eingeschalteten zustand wird unsichtbare laserstrahlung von der lasereinhelt abgestrahlt.

Wellenlänge: 780 nm
Maximale strahlungsleistung der lasereinhelt: 100 μW/VDE

Die strahlung an der lasereinheit ist ungefährlich, wenn folgende punkte beachtet werden:

1. Die lasereinhelt nicht zerlegen, da die strahlung an der freigelegten laserdiode gefährlich ist.
2. Den werksseitig justierten einstellregler der lasereinreit nicht verstellen.
3. Nicht mit optischen instrumenten in die fokussierlinse blicken.
4. Nicht über längere zeit in die fokussierlinse blicken.

ADVARSEL: I dette a apparat anvendes laser.

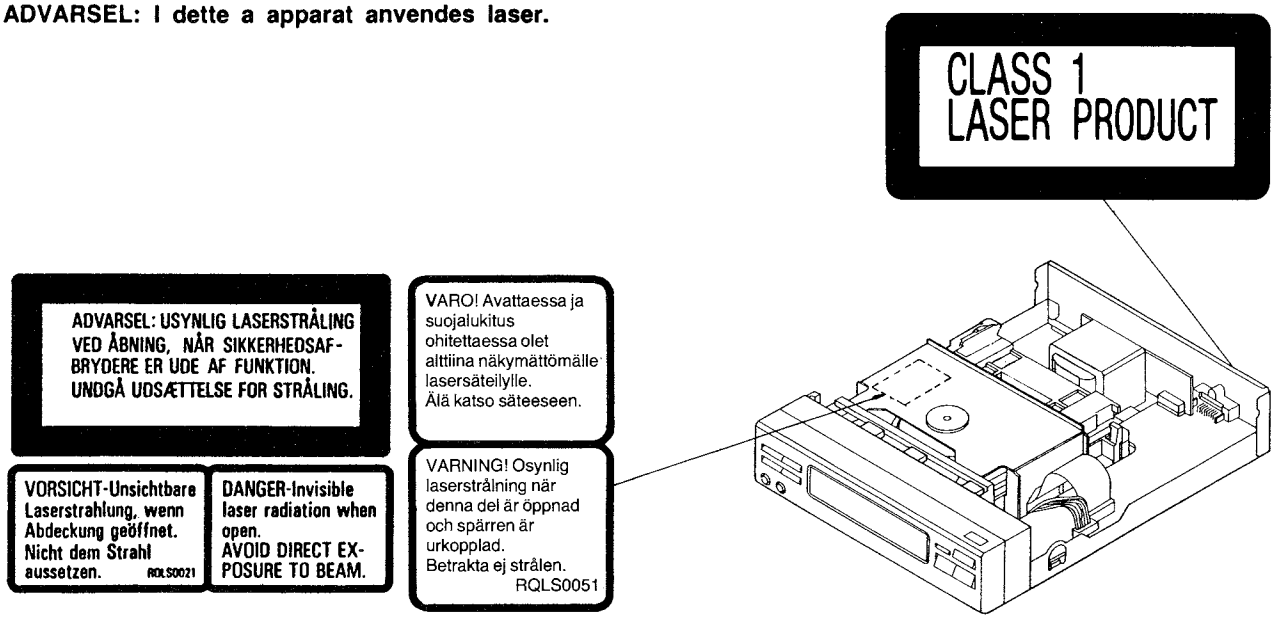

Note:
Refer to the service manual for Model No. SU-CH7, Order No. AD9104082C8 for information on ACCESSORIES. INSTALLATION OF THE SYSTEM, CONNECTIONS and PACKAGING.

■ DISASSEMBLY INSTRUCTIONS

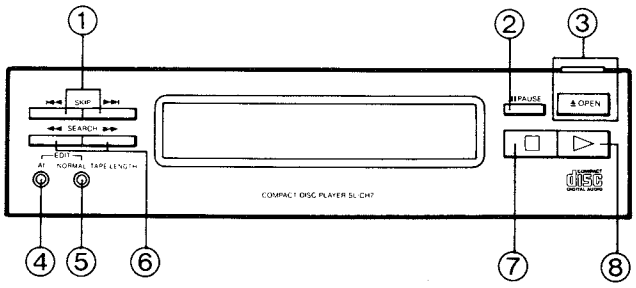

Compact disc player: control section

① **Skip buttons (|◀◀ SKIP ▶▶|)**
Press one of these buttons briefly to move the pickup (backward and forward) to the beginning of a specific track.

② **Pause button (❚❚ PAUSE)**

③ **Disc tray open/close button (▲ OPEN, ▲ OPEN/CLOSE)**
Used for opening and closing the disc tray.

④ **AI edit-recording button (AI)**
This button is used to make an AI edit-recording.

⑤ **Edit mode button (NORMAL/TAPE LENGTH)**
This button can be used to choose one of the edit modes or to specify the tape length to be used.

⑥ **Search buttons (◀◀ SEARCH ▶▶)**
Use these buttons to move the pickup forward and backward.

⑦ **Stop button (□)**

⑧ **Play button (▷)**

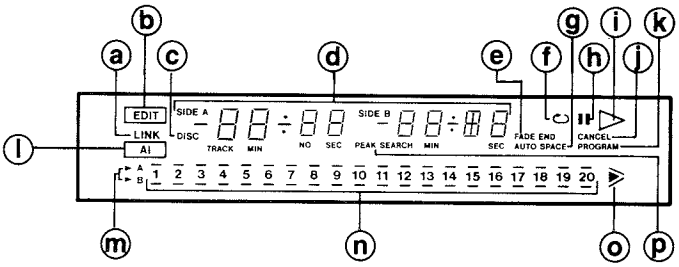

Compact disc player: display section

ⓐ **Link indicator (LINK)**
Illuminates when the unit is in a condition the disc link is possible.

ⓑ **Edit indicator (EDIT)**
Illuminates when edit-recording a CD.

ⓒ **Disc indicator (DISC)**
Illuminates when a disc has been loaded.

ⓓ **Multi-display**
This display shows the track number and elapsed play time of the current track, or the remaining time of the tape while the unit is in the CD-edit mode. ("SIDE A" or "SIDE B" illuminates.)

ⓔ **Fade end indicator (FADE END)**
Illuminates when the unit is normal edit mode, and illuminates to show fading at the end of the tape.

ⓕ **Repeat indicator (↻)**
Illuminates when the repeat mode is activated.

ⓖ **Auto space indicator (AUTO SPACE)**
Illuminates during edit-recording of compact discs, and shows that the auto space function is activated.

ⓗ **Pause indicator (❚❚)**
Illuminates when the pause mode is activated.

ⓘ **Play indicator (▷)**
Illuminates when the play mode is activated.

ⓙ **Program cancel indicator (CANCEL)**
Illuminates when the programmed track can be cancelled.

ⓚ **Program play indicator (PROGRAM)**
Illuminates during program play.

ⓛ **AI edit-recording indicator (AI)**
Illuminates when AI edit-recording mode is activated.

ⓜ **Tape side indicator (▶ A, ▶ B)**
Shows the tape side (A or B) to be recorded on when performing the edit-recording of compact disc.

ⓝ **Track number indicator (1–20)**
Shows the number of tracks.

ⓞ **"Over" mark (▶)**
This indicator illuminates if the total number of tracks on the disc is 21 or more.

ⓟ **Peak search indicator (PEAK SEARCH)**
Illuminates while the CD player automatically scans for the peak level on the CD.
When peak search ends, "PEAK" flashes to indicate the peak level.

■ HANDLING PRECAUTIONS FOR TRAVERSE DECK

The laser diode in the traverse deck (optical pickup) may break down due to potential difference caused by static electricity of clothes or human body.
So, be careful of electrostatic breakdown during repair of the traverse deck (optical pickup).

•Handling of traverse deck (optical pickup)

1. Do not subject the traverse deck (optical pickup) to static electricity as it is extremely sensitive to electrical shock.
2. To prevent the breakdown of the laser diode, an anti-static shorting pin is inserted into the flexible board (FPC board). When removing or connecting the short pin, finish the job in as short time as possible.
3. Take care not to apply excessive stress to the flexible board (FPC board).
4. Do not turn the variable resistor (laser power adjustment). It has already been adjusted.

•Grounding for electrostatic breakdown prevention

1. Human body grounding
   Use the anti-static wrist strap to discharge the static electricity from your body.
2. Work table grounding
   Put a conductive material (sheet) or steel sheet on the area where the traverse deck (optical pickup) is placed, and ground the sheet.

Caution:
The static electricity of your clothes will not be grounded through the wrist strap. So, take care not to let your clothes touch the traverse deck (optical pickup).

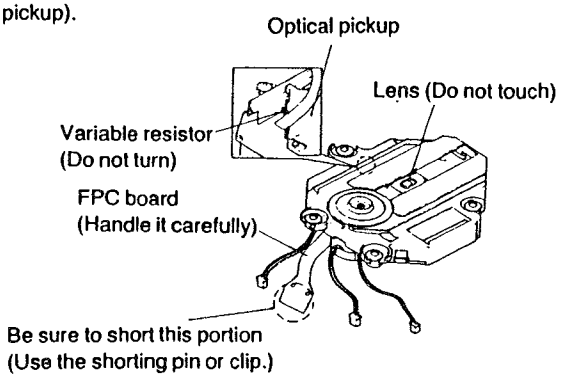

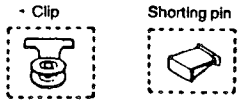

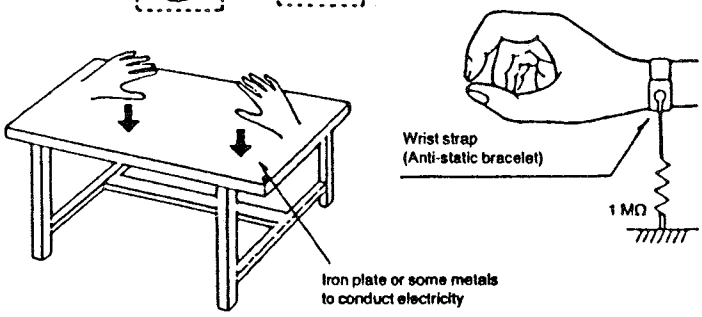

■ LOCATION OF CONTROLS

Warning: This product uses a laser diodes. Refer to caution statements on page 2.
ACHTUNG: •Die lasereinheit nicht zerlegen.
•Die lasereinheit darf nur gegen eine vom hersteller spezifizierte einheit ausgetauscht werden.
"ATTENTION SERVICER"
Some chassis components may have sharp edges. Be careful when disassembling and servicing.

Ref. No. 1	Removal of the Cabinet	Ref. No. 2	Removal of the Power Transformer
Procedure 1		Procedure 1→2	

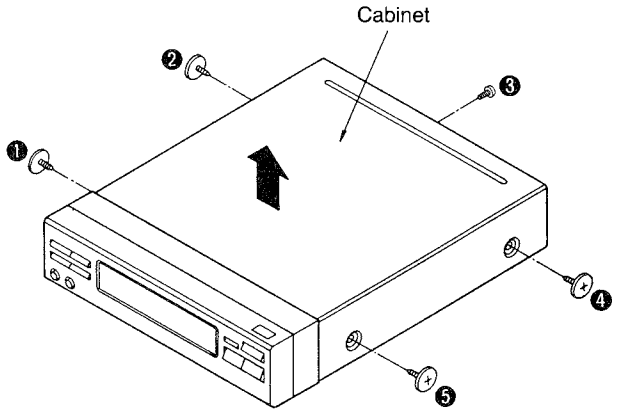

•Remove 5 screws (❶~❺).

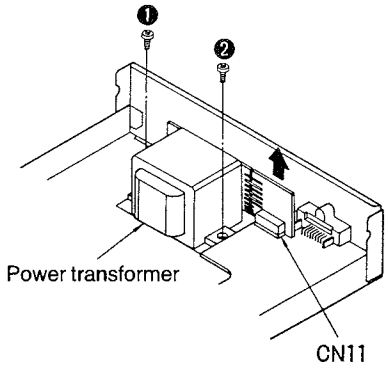

1. Remove 2 screws (❶, ❷).
2. Remove the connector (CN11) in the direction of arrow.

Ref. No. 3	Removal of the Front Panel Unit
Procedure 1→3	

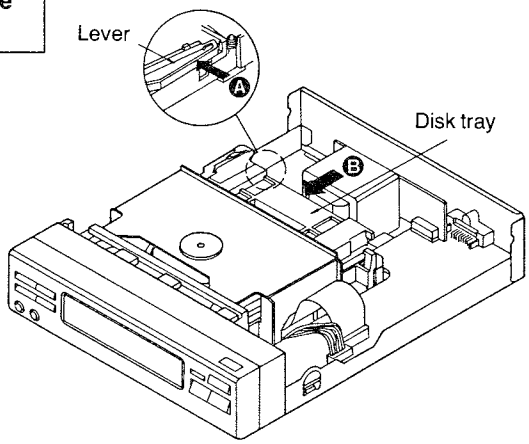

1. Push the rack gear slowly in the direction of the arrow until the disc tray comes up.

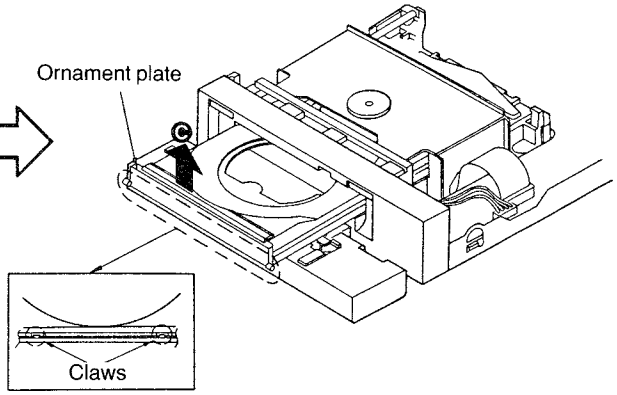

2. Remove the 2 claws and then the ornament plat in the direction of arrow Ⓒ.

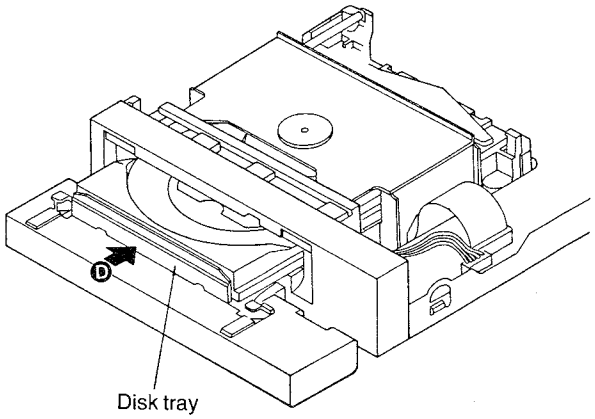

4. Push the disc tray in the direction of the arrow Ⓓ to insert it in the unit.

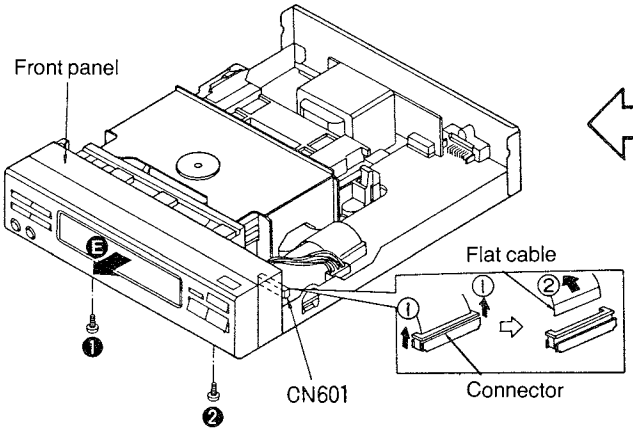

5. Remove the connector (CN601).
6. Remove the screws (❶, ❷).
7. Remove the front panel unit in the direction of arrow Ⓔ.

Ref. No. 4	Removal of the Loading Unit
Procedure 1→3→4	

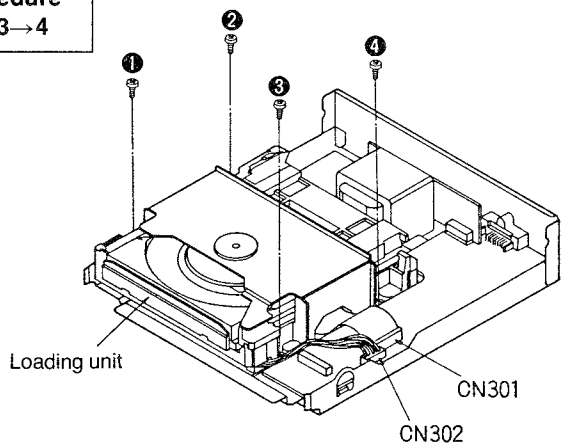

1. Remove 2 connectors (CN301, CN302).
2. Remove 4 screws (❶~❹).

Ref. No. 5	Removal of the Front Panel
Procedure 1→3→5	

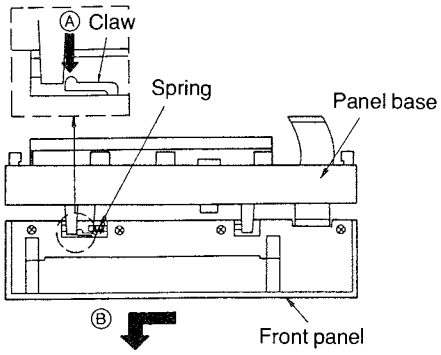

1. Remove the spring.
2. Push the claw in the direction of arrow Ⓐ and then remove the front panel in the direction of arrow Ⓑ.

Ref. No. 6	Removal of the Operation P.C.B.
Procedure 1→3→5→6	

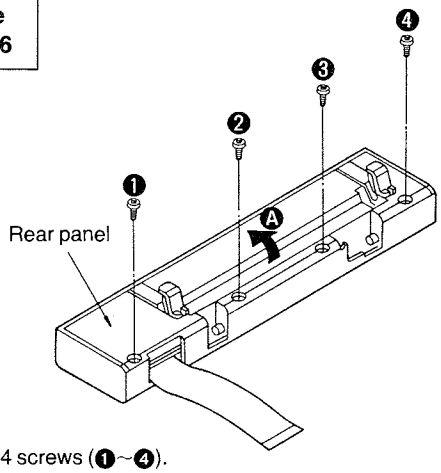

1. Remove 4 screws (❶~❹).
2. Remove the rear panel in the direction of arrow Ⓐ.

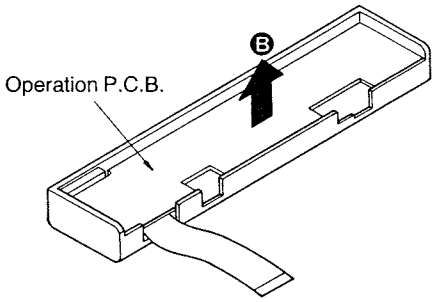

3. Remove the operation P.C.B. in the direction of arrow Ⓑ.

Ref. No. 7	Removal of the Main P.C.B.
Procedure 1→2→3→7	

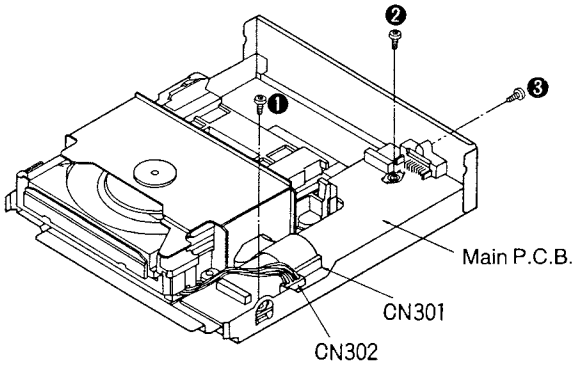

1. Remove 3 screws (❶~❸).
2. Remove 2 connectors (CN301, CN302).

Ref. No. 8	Removal of the Disk Clamper
Procedure 1→3→8	

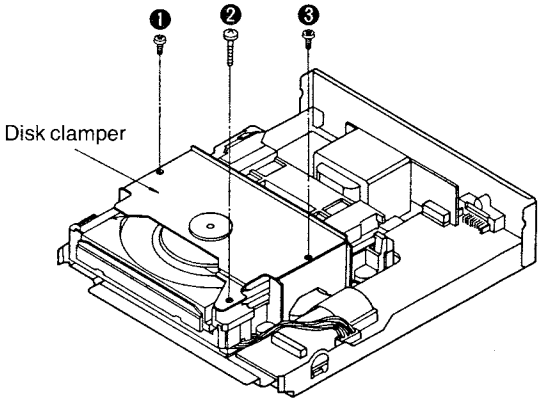

- Remove 3 screws (❶~❸).

Ref. No. 9	Removal of the Magnet and Holder
Procedure 1→3→8→9	

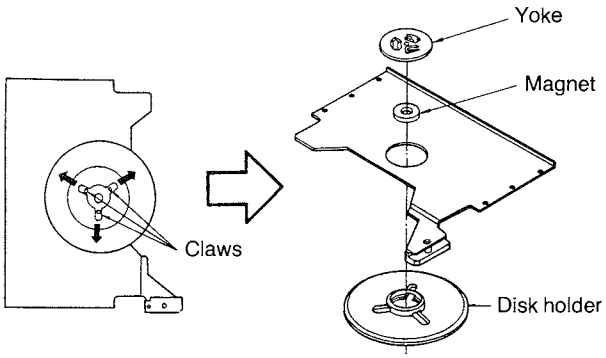

- Remove 3 claws.

Ref. No. 10	Removal of the Guide Shaft and Guide Shaft Holder
Procedure 1→3→4→8 →10	

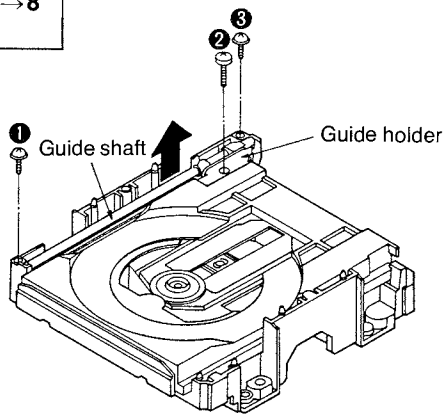

1. Remove 3 screws (❶~❸).
2. Remove the guide shaft and guide shaft holder in the direction of arrow.

Ref. No. 11	Removal of the Disk Tray
Procedure 1→3→4→8→10→11	

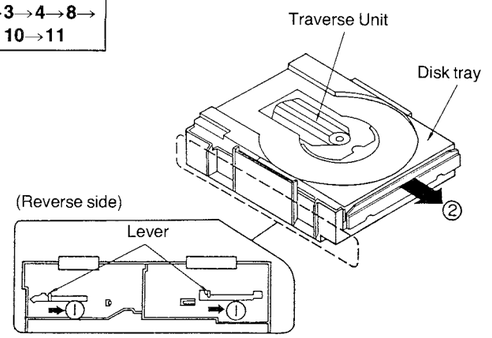

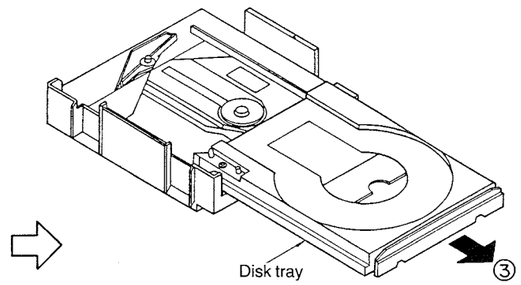

1. Move the lever in the direction of arrow ① until the traverse unit goes down and the disc tray slightly slides in the direction of arrow ②.
2. Slide the disc tray in the direction of arrow ②.
3. Remove the disc tray in the direction of arrow ③.

Ref. No. 12	Removal of the Lever (A)
Procedure 1→3→4→8→10→11→12	

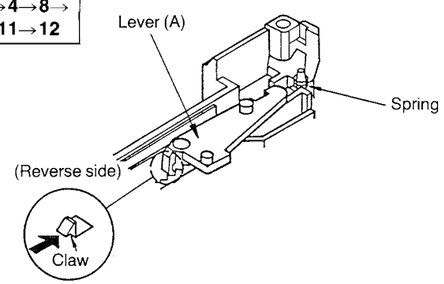

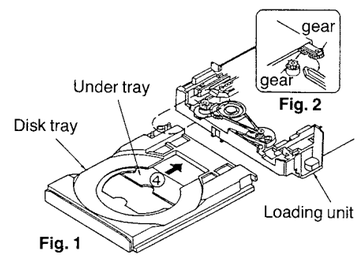

Fig. 2

Fig. 1

1. Remove the spring.
2. Push the claw in the direction of arrow.
1. Slide the under tray fully in the direction of arrow ④. (Refer to Fig. 1.)
2. Slide the disc tray so that the gears bite each other as shown in Fig. 2.

Ref. No. 13	Removal of the Servo P.C.B.
Procedure 1→3→4→13	

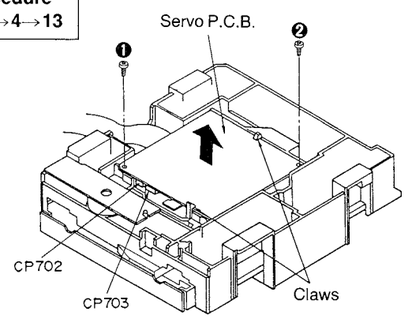

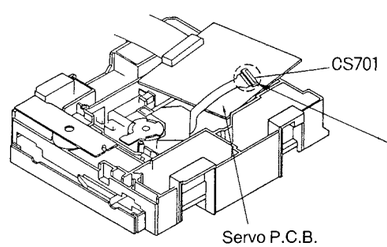

●Removal of the FPC board Push the top of the connector in the direction of the arrow ①, and then pullout the flat cable.

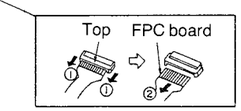

1. Remove 2 screws. (❶, ❷).
2. Remove 2 claws.
3. Remove the servo P.C.B. in the direction of arrow.
4. Remove 2 connectors (CP702, CP703).
5. Remove the F.P.C. board (S701).

Note:
Insert a short pin into the traverse deck's FPC board.

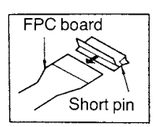

Ref. No. 14	Removal of the Loading P.C.B. and Loading Motor.
Procedure 1→3→4→8→10→11→12→14	

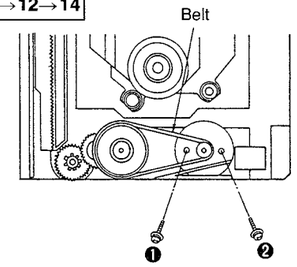

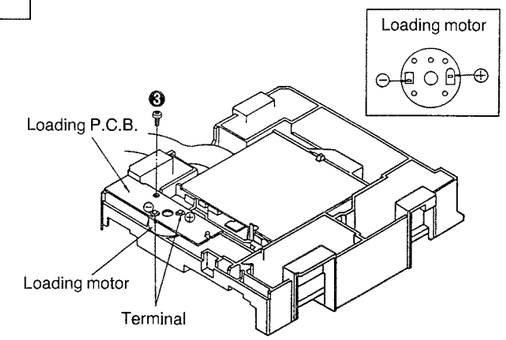

1. Remove the belt.
2. Remove 2 screws (❶, ❷).
3. Remove the screw (❸).
4. Unsolder the 2 terminal of loading motor.

Ref. No. 15	Removal of the Traverse Unit
Procedure 1→3→4→8→10→11→13→15	

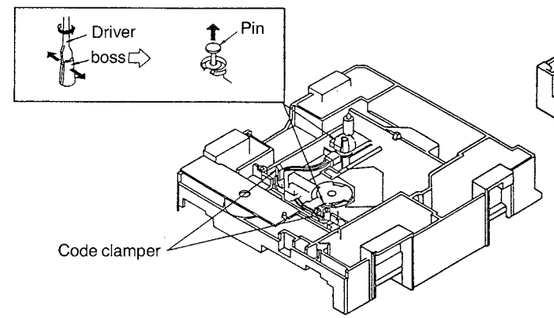

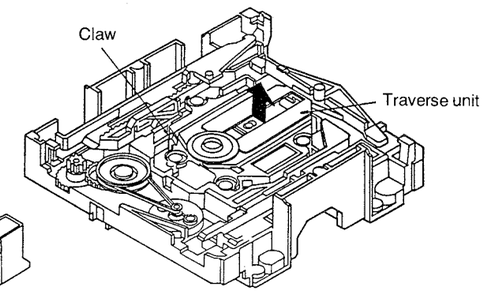

1. Release the cables from the code clampers.
2. Remove 2 pin in the direction of arrow.
3. Remove the claw and remove the traverse unit in the direction of arrow.

Ref. No. 16	Removal of the Traverse Chassis and Lever B
Procedure 1→3→4→8→10→11→12→13→15→16	

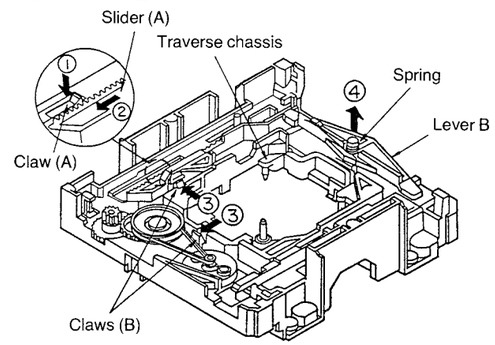

■ **Remove the traverse chassis.**
1. Push the claw (A) in the direction of arrow ①, and then move the slider (A) in the direction of arrow ②.
2. Push 2 claws (B) in the direction of arrow ③, and then remove the traverse chassis.

■ **Remove the lever (B)**
1. Push the claw (A) in the direction of arrow ①, and then move the lever (A) in the direction of arrow ②.
2. Remove the spring.
3. Remove the lever (B) in the direction of arrow ④.

Ref. No. 14	Removal of the Loading P.C.B. and Loading Motor.
Procedure 1→3→4→8→10→11→12→14	

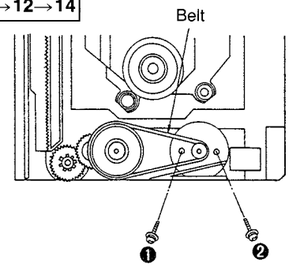

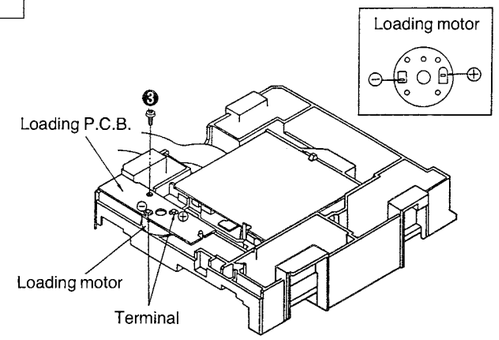

1. Remove the belt.
2. Remove 2 screws (❶, ❷).
3. Remove the screw (❸).
4. Unsolder the 2 terminal of loading motor.

Ref. No. 15	Removal of the Traverse Unit
Procedure 1→3→4→8→10→11→13→15	

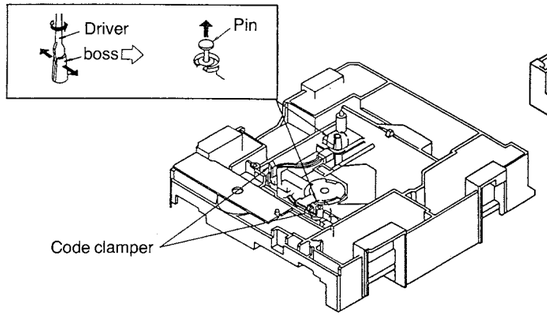

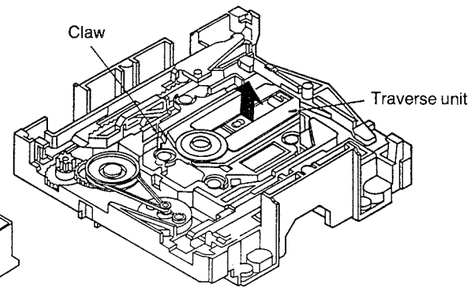

1. Release the cables from the code clampers.
2. Remove 2 pin in the direction of arrow.
3. Remove the claw and remove the traverse unit in the direction of arrow.

Ref. No. 16	Removal of the Traverse Chassis and Lever B
Procedure 1→3→4→8→10→11→12→13→15→16	

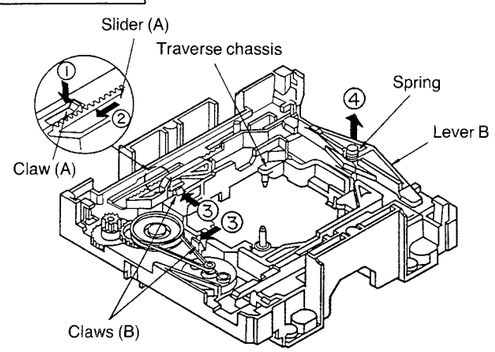

■ **Remove the traverse chassis.**
1. Push the claw (A) in the direction of arrow ①, and then move the slider (A) in the direction of arrow ②.
2. Push 2 claws (B) in the direction of arrow ③, and then remove the traverse chassis.

■ **Remove the lever (B)**
1. Push the claw (A) in the direction of arrow ①, and then move the lever (A) in the direction of arrow ②.
2. Remove the spring.
3. Remove the lever (B) in the direction of arrow ④.

Ref. No. 17	Removal of the Slider (A) and Slider (B)
Procedure 1→3→4→8→10→11→12→13→15→16→17	

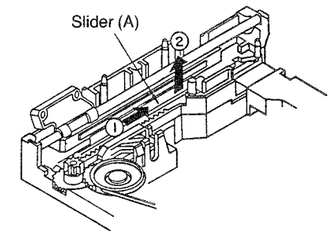

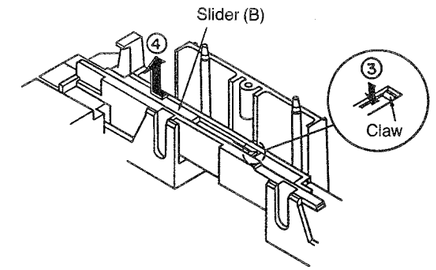

■ Removal of the slider (A)
- Move the slider (A) in the direction of arrow ①, and remove the lod (A) in the direction of arrow ②.

■ Removal of the slider (B)
- Push the claw in the direction of arrow ③, and remove the slider (B) in the direction of arrow ④.

Ref. No. 18	Check of the Main P.C.B.
Procedure 1→3→18	

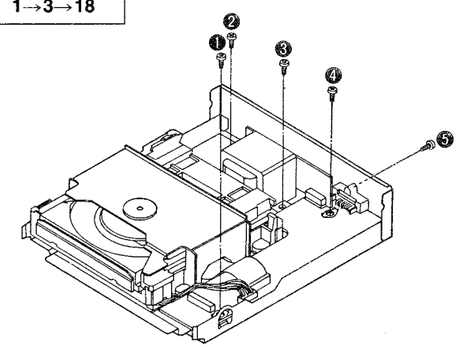

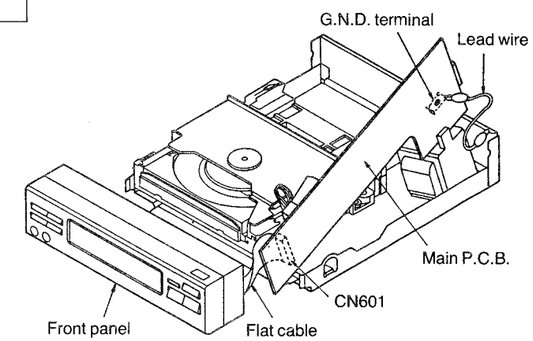

1. Remove 5 screws (❶~❺).
2. Connect the flat cable to CN601 as shown in figure.
3. Connect the G.N.D terminal to the chassis by the lead wire.
4. Check the main P.C.B. as shown in the figure.

Ref. No. 19	Check of the Operation P.C.B. and Servo P.C.B
Procedure 1→3→5→6→19	

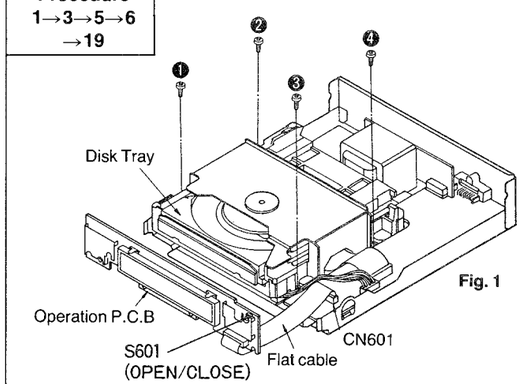

Fig. 1

To play disk
1. push S601 so that the disc tray comes up.
2. Place the test disk on the tray. Then, push S604 to set the test disc.
3. Push S604 to start the test disk play.

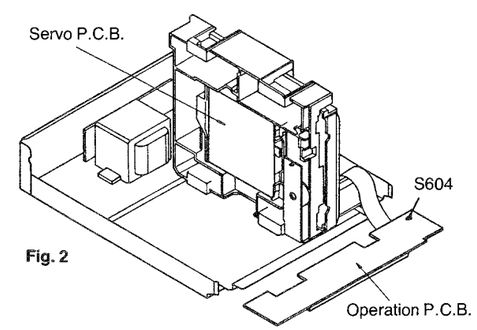

Fig. 2

1. Connect the flat cable to CN601 as shown in Fig. 1.
2. Remove 2 screws (❶~❹).
3. Place the loading unit sideways as shown in Fig. 2.

Note:
Make sure not to damage the flat cable.

4. Detatch the operation P.C.B. and the servo P.C.B. as shown in Figure.

SL-CH7 SL-CH7

SCHEMATIC DIAGRAM (Parts list on pages 35~38)

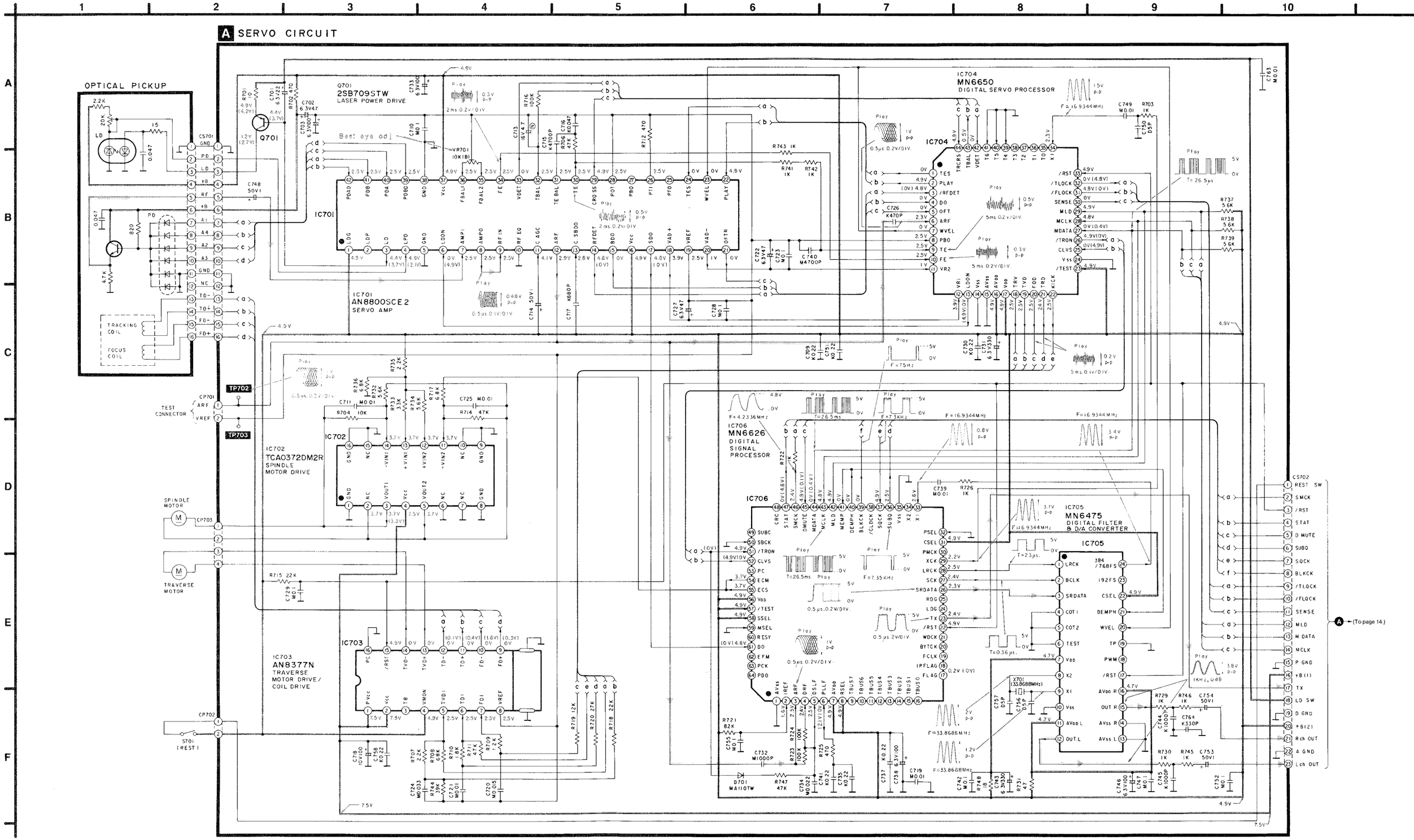

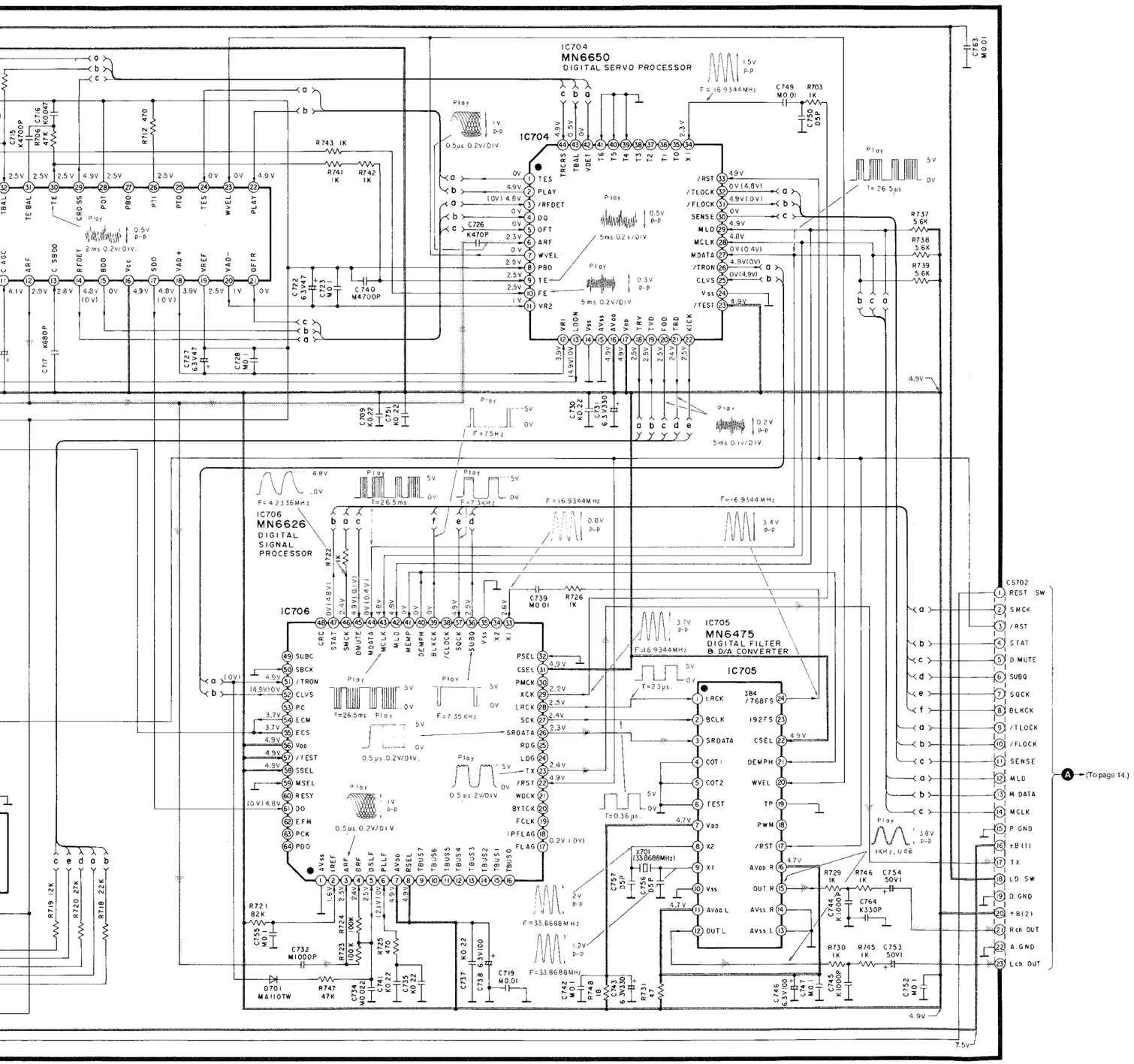

- **Notes:**
- S601 : Disk tray open/close switch.
- S602 : Pause switch.
- S603 : Stop switch.
- S604 : Play switch.
- S605, 606 : Skip switch. (S605: ⏮, S606: ⏭)
- S607, 608 : Search switch. (S607: ◀◀, S608: ▶▶)
- S612 : Edit mode switch (NORMAL/TAPE LENGTH).
- S613 : AI edit recording switch.
- S701 : Reset switch.
- S790, 791 : Desk tray open/close detection switch.

- Indicated voltage values are the standard values for the unit measured by the DC electronic circuit tester (high-impedance) with the chassis taken as standard. Therefore, there may exist some errors in the voltage values, depending on the internal impedance of the DC circuit tester.

*The parenthesized are the values of voltage generated during playing (Test disc 1 kHz, L+R 0 dB), others are voltage values in stop mode.

Positive voltage line

Negative voltage line

CD signal line

- Important safety notice:
  Components identified by ⚠ mark have special characteristics important for safety. When replacing any of these components, use only manufacturer's specified parts.
- **This schematic diagram may be modified at any time with the development of new technology.**

- **Caution!**
  IC and LSI are sensitive to static electricity.
  Secondary trouble can be prevented by taking care during repair.
  - Cover the parts boxes made of plastics with aluminum foil.
  - Ground the soldering iron.
  - Put a conductive mat on the work table.
  - Do not touch the legs of IC or LSI with the fingers directly.

- The supply part number is described alone in the replacement parts list.

Ref No.	Production Parts No.	Supply Parts No.
IC1	LM2940T5M	LM2940T5
IC801	BA4558F	SVIBA4558FT1

SCHEMATIC DIAGRAM (Parts list on pages 35~38)

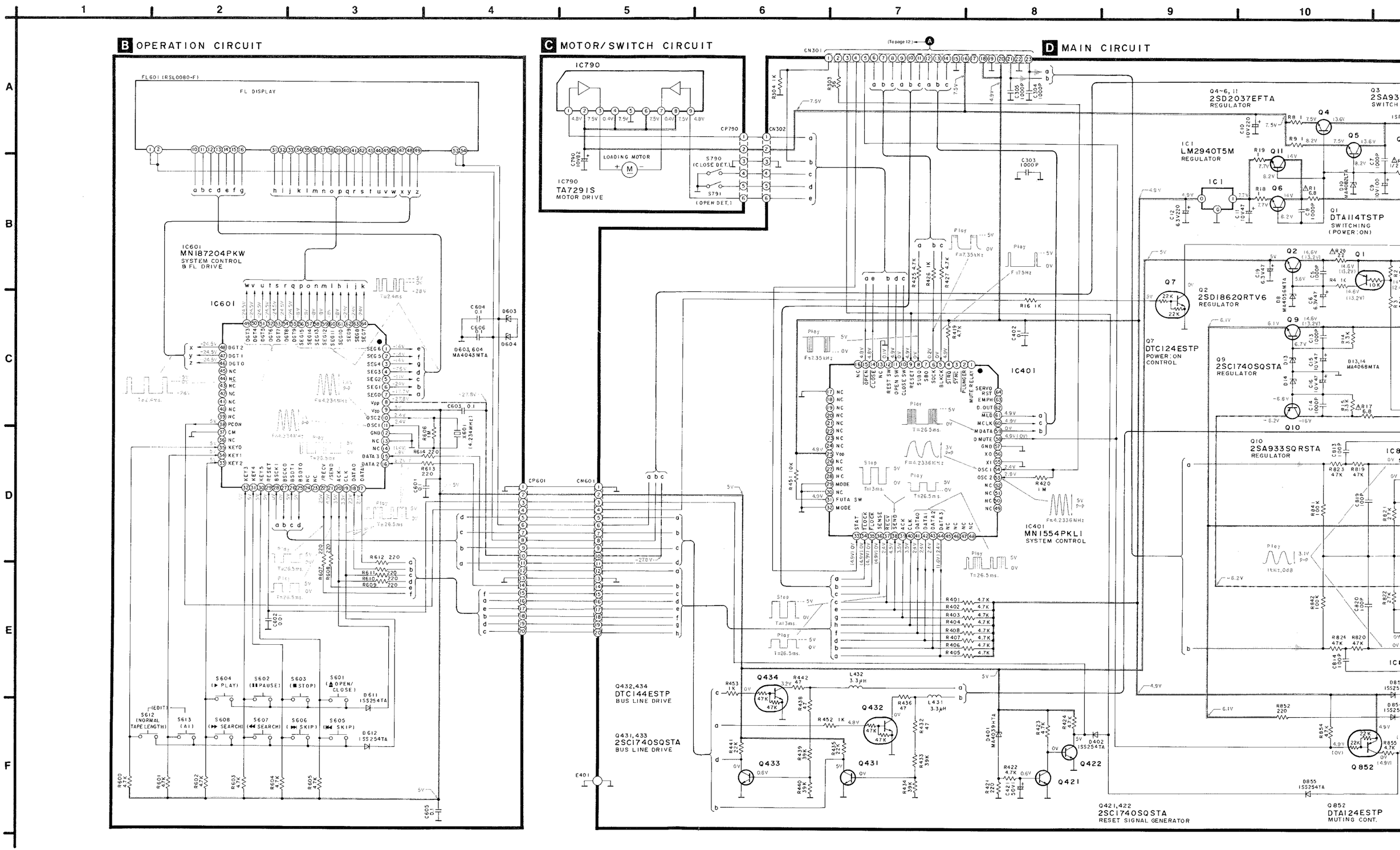

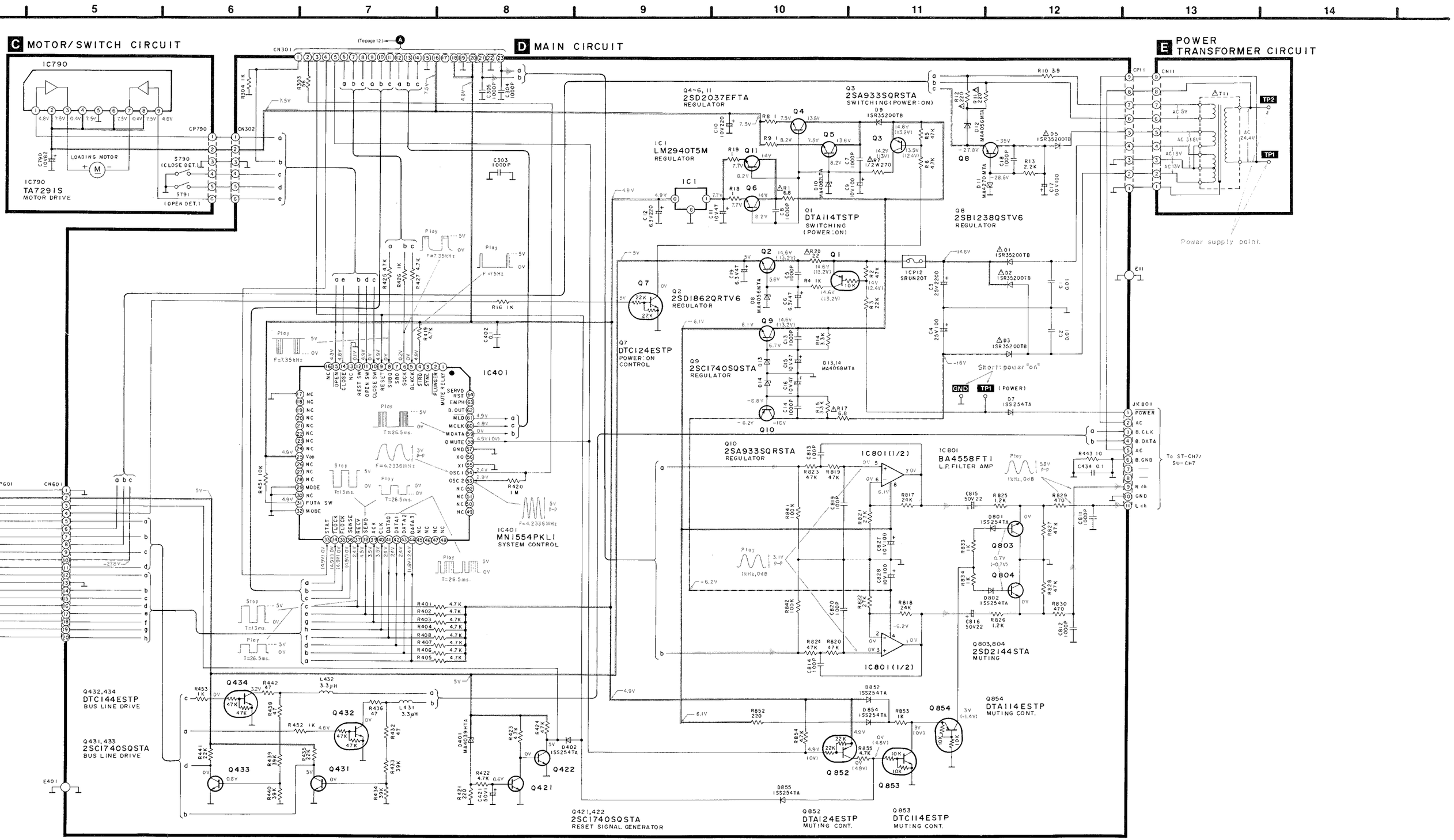
C MOTOR/SWITCH CIRCUIT
D MAIN CIRCUIT
E POWER TRANSFORMER CIRCUIT
IC790
TA7291S
MOTOR DRIVE
LOADING MOTOR
S790 (CLOSE DET.)
S791 (OPEN DET.)
CN301
CN302
CP790
CN601
P601
(To page 12)
Q4~6, 11
2SD2037EFTA
REGULATOR
Q3
2SA933SQRSTA
SWITCHING (POWER: ON)
IC1
LM2940T5M
REGULATOR
Q1
DTA114TSTP
SWITCHING (POWER: ON)
Q8
2SB1238QSTV6
REGULATOR
Q2
2SD1862QRTV6
REGULATOR
Q7
DTC124ESTP
POWER: ON CONTROL
Q9
2SC1740SQSTA
REGULATOR
Q10
2SA933SQRSTA
REGULATOR
IC401
MN1554PKLI
SYSTEM CONTROL
IC801 (1/2)
BA4558FTI
L.P. FILTER AMP
Q803, 804
2SD2144STA
MUTING
Q854
DTA114ESTP
MUTING CONT.
Q852
DTA124ESTP
MUTING CONT.
Q853
DTC114ESTP
MUTING CONT.
Q432, 434
DTC144ESTP
BUS LINE DRIVE
Q431, 433
2SC1740SQSTA
BUS LINE DRIVE
Q421, 422
2SC1740SQSTA
RESET SIGNAL GENERATOR
Power supply point.
Short: power "on"
JK801
To ST-CH7/SU-CH7
E401
E11
CN11
CP11
TP1
TP2
GND

■ PRINTED CIRCUIT BOARDS

■ WIRING

E POWER TRANSFORMER P.C.B.

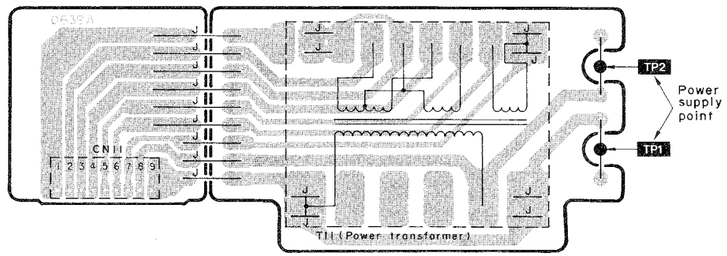

C MOTOR/SWITCH P.C.B.

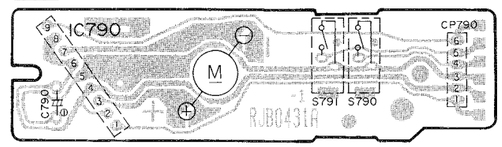

B OPERATION P.C.B.

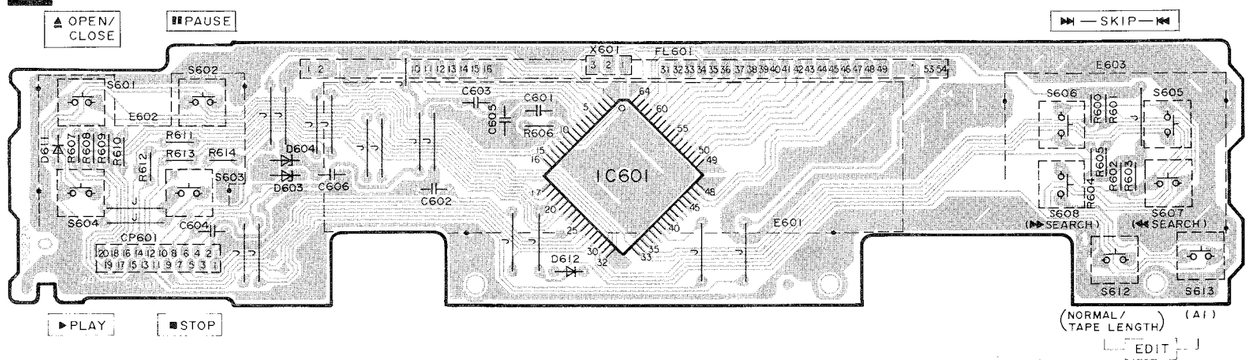

A SERVO P.C.B.

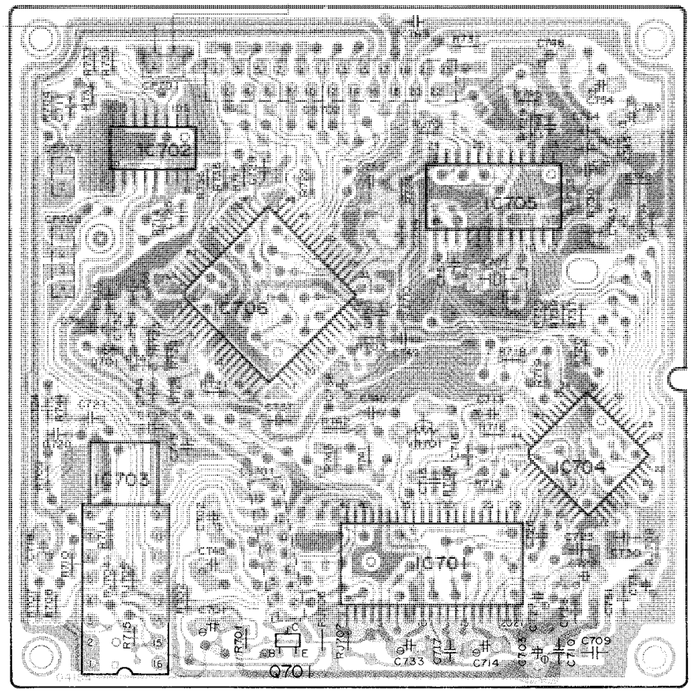

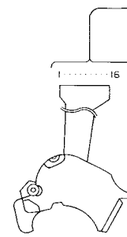

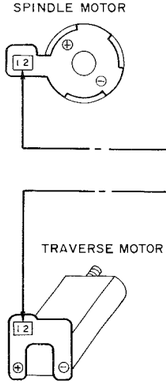

D MAIN P.C.B.

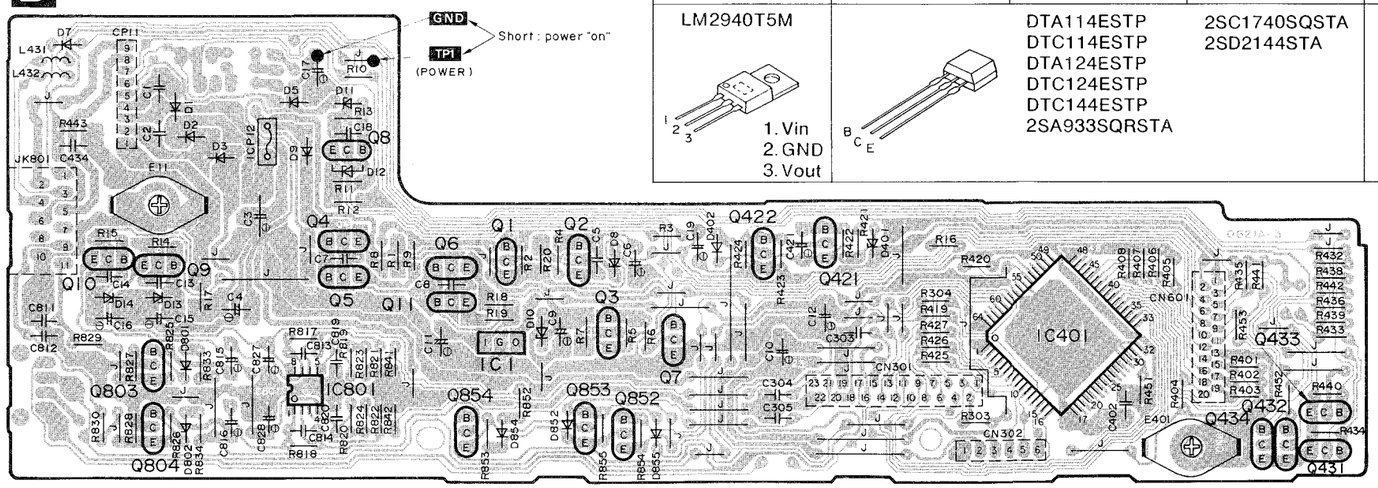

BA4558FT1	TCA0372DM2R	MN6475	AN8800SCE2	MN6626 MN1554PKL1 MN187204PKW	MN6650	AN8377N
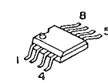	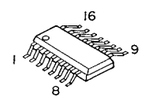	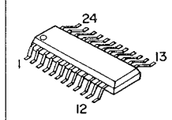	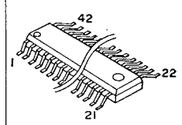	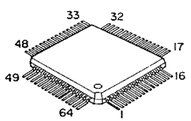	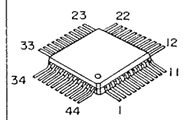	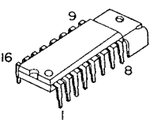

LM2940T5M		DTA114ESTP DTC114ESTP DTA124ESTP DTC124ESTP DTC144ESTP 2SA933SQRSTA	2SC1740SQSTA 2SD2144STA	2SB1238QSTV6 2SD1862QRTV6	2SD2037EFTA	1SS254TA 1SR35200TB	MA4270MTA
1. Vin 2. GND 3. Vout				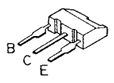	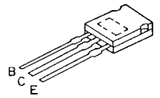	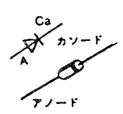	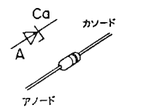

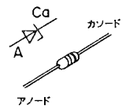	MA4039HTA MA4056MTA MA4068MTA MA4082LTA MA4043MTA

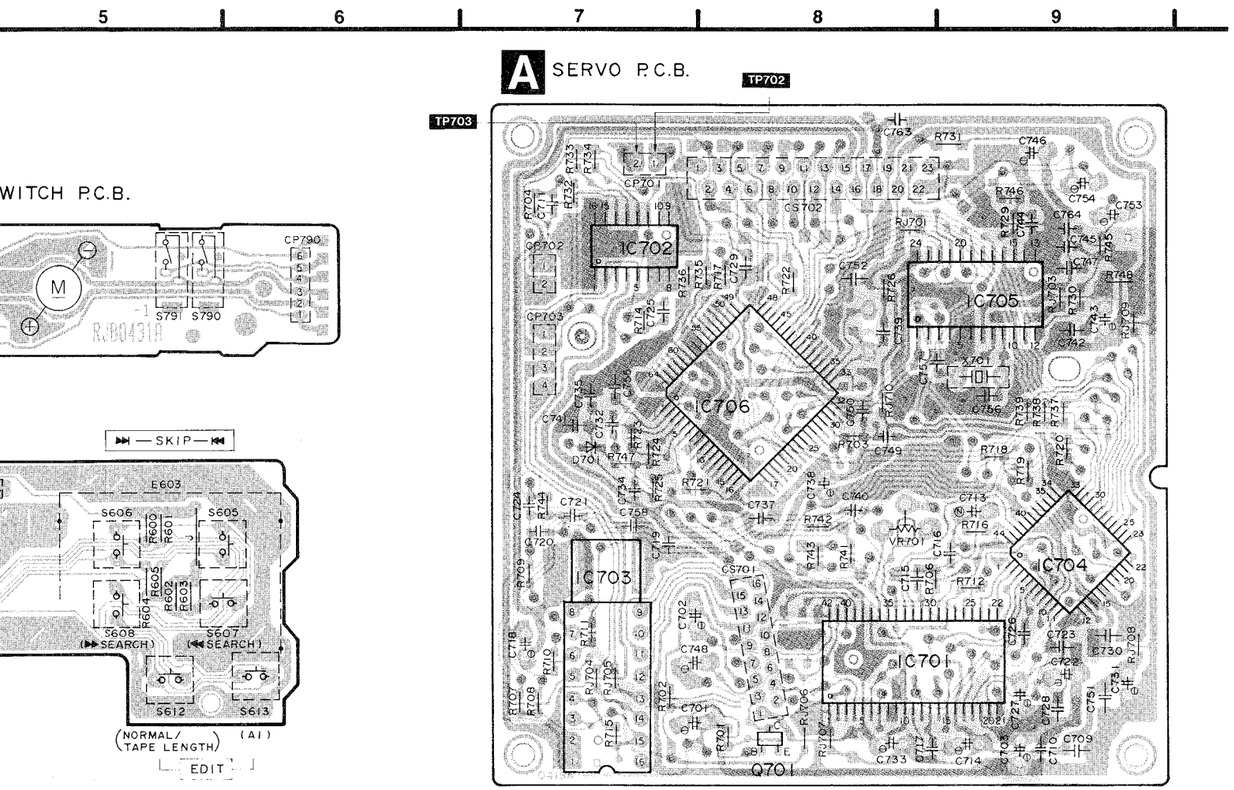

372DM2R	MN6475	AN8800SCE2	MN6626 MN1554PKL1 MN187204PKW		MN6650	AN8377N
	DTA114ESTP DTC114ESTP DTA124ESTP DTC124ESTP DTC144ESTP 2SA933SQRSTA	2SC1740SQSTA 2SD2144STA	2SB1238QSTV6 2SD1862QRTV6	2SD2037EFTA	1SS254TA 1SR35200TB	MA4270MTA
						MA4039HTA MA4056MTA MA4068MTA MA4082LTA MA4043MTA

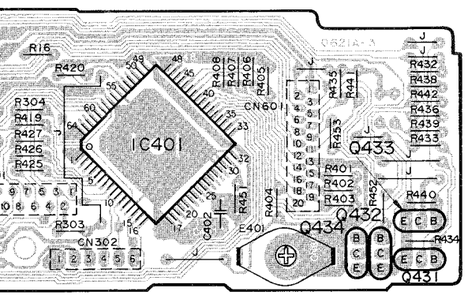

■ WIRING CONNECTION DIAGRAM

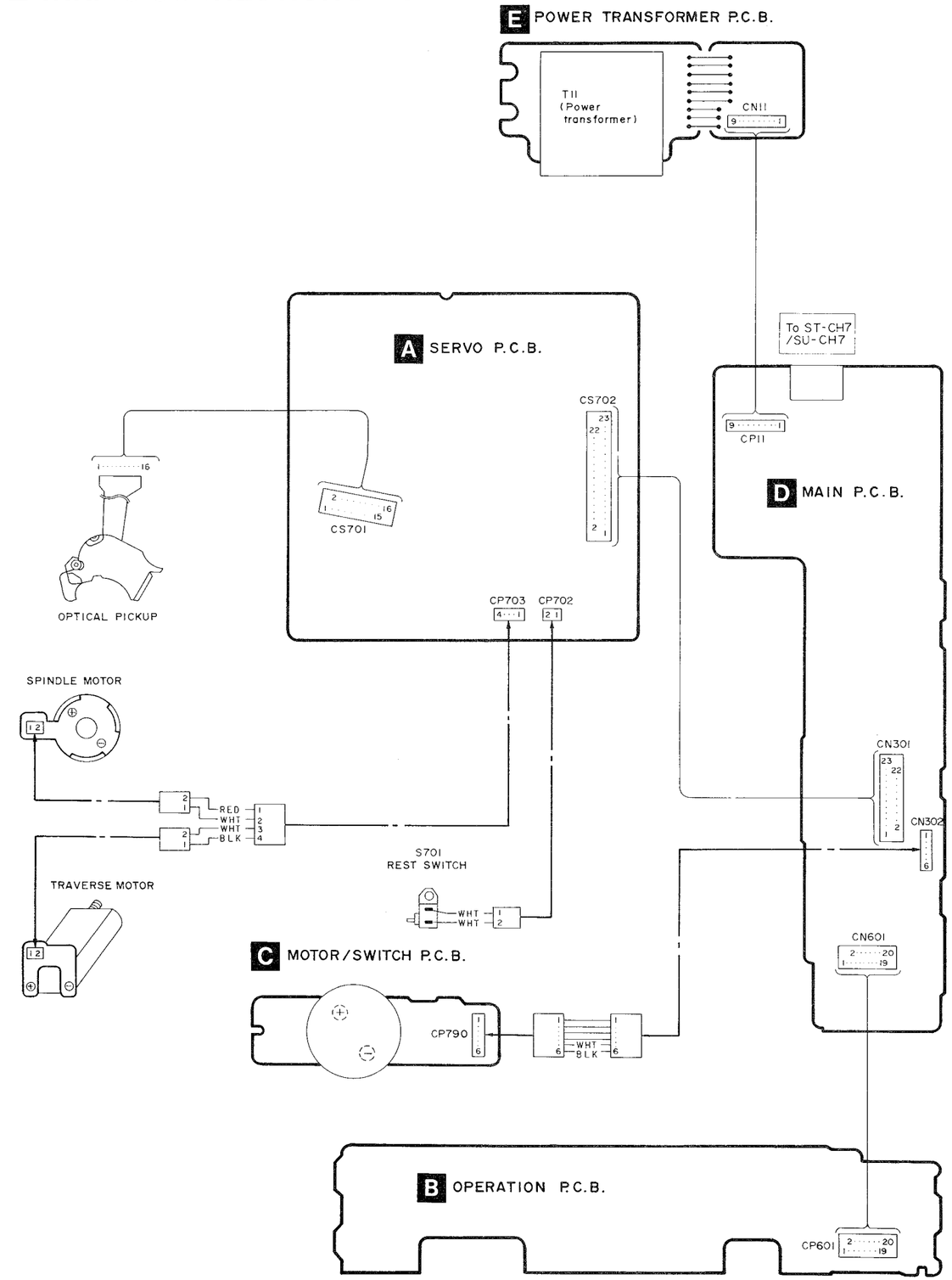

■ BLOCK DIAGRAM

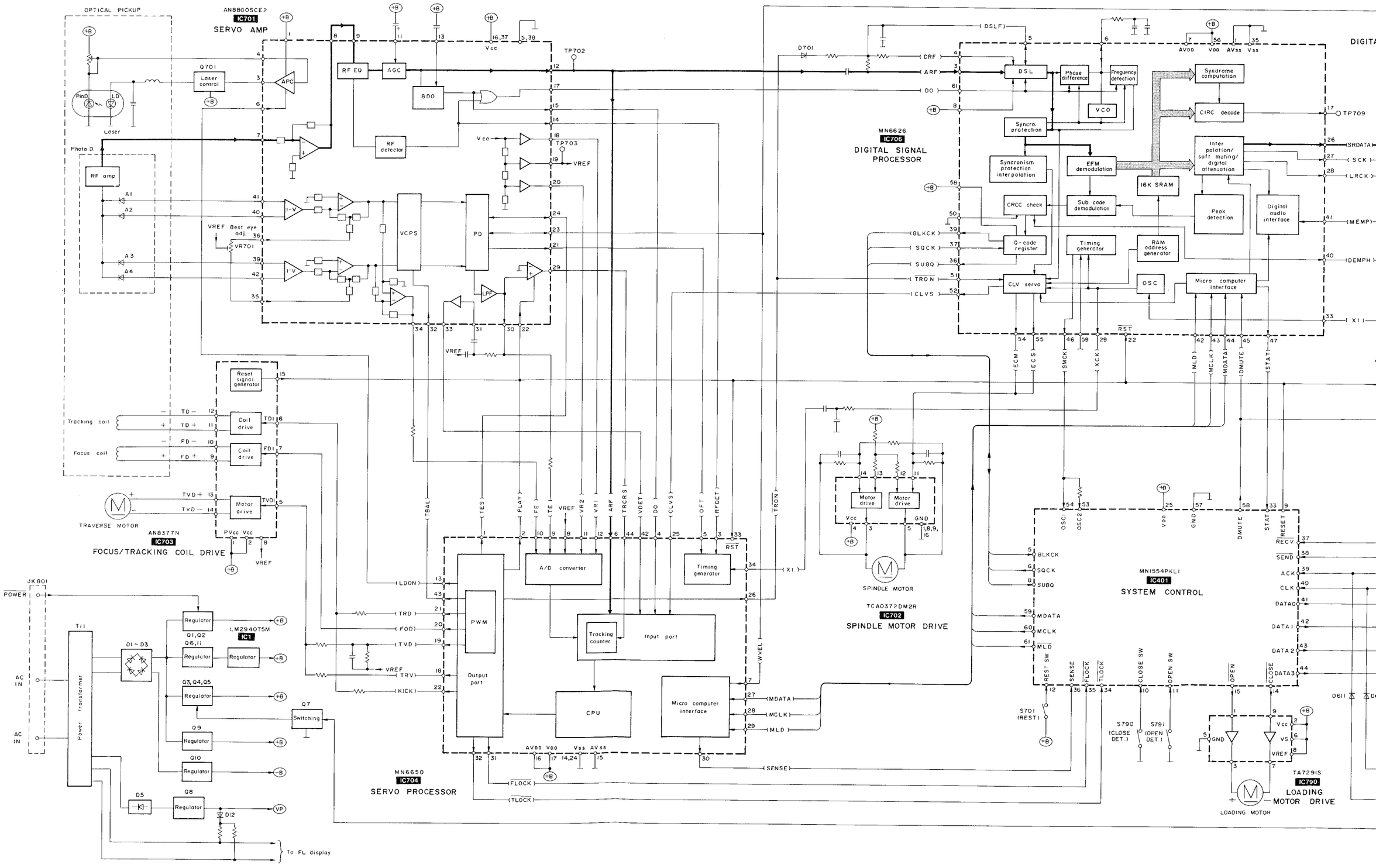

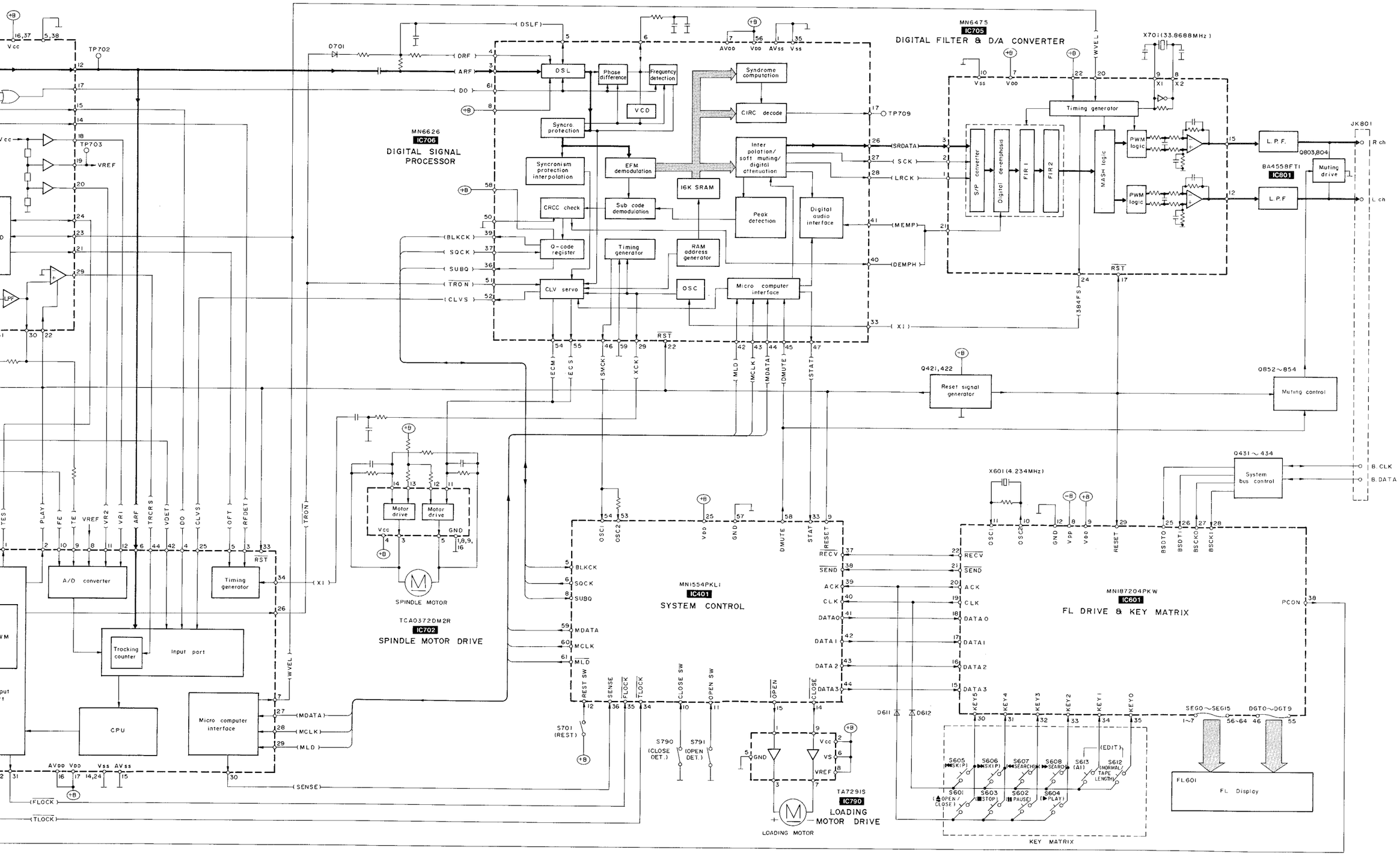
MN6626
IC706
DIGITAL SIGNAL PROCESSOR
MN6475
IC705
DIGITAL FILTER & D/A CONVERTER
X701 (33.8688MHz)
DSL
Phase difference
Frequency detection
VCO
Syndrome computation
CIRC decode
Syncro protection
Syncronism protection interpolation
EFM demodulation
Inter polation/ soft muting/ digital attenuation
16K SRAM
CRCC check
Sub code demodulation
Peak detection
Digital audio interface
Q-code register
Timing generator
RAM address generator
CLV servo
OSC
Micro computer interface
Timing generator
S/P converter
Digital de-emphasis
FIR 1
FIR 2
MASH logic
PWM logic
L. P. F.
BA4558FTI
IC801
Muting drive
JK801
R ch
L ch
Reset signal generator
Muting control
System bus control
B. CLK
B. DATA
Motor drive
SPINDLE MOTOR
TCA0372DM2R
IC702
SPINDLE MOTOR DRIVE
MN1554PKLI
IC401
SYSTEM CONTROL
MN187204PKW
IC601
FL DRIVE & KEY MATRIX
X601 (4.234MHz)
A/D converter
Timing generator
Tracking counter
Input port
CPU
Micro computer interface
S701 (REST)
S790 (CLOSE DET.)
S791 (OPEN DET.)
TA7291S
IC790
LOADING MOTOR DRIVE
LOADING MOTOR
KEY MATRIX
FL601
FL Display

■ DIGITAL SERVO SYSTEM

The newly-developed digital servo system is adopted in the servo circuit of the unit's CD player instead of the ordinary analog servo system.

1. The diagrams shown below represent differences between the analog servo and digital servo systems. The HEAD AMP. output signals (i.e., focus error and tracksing error output signals) are analog. These analog signals are converted to the 8-bit digital signals through the MN6650. The MN6650 performs the following adjustments automatically; focus offset, tracking offset, focus gain, tracking gain, and tracking balance adjustments. The outputs from the MN6650 such as the focus coil driving signal, tracking coil driving signal, and traverse motor driving signal are converted to analog signals again and sent to the coils and motor to perform proper servo control for a disc.

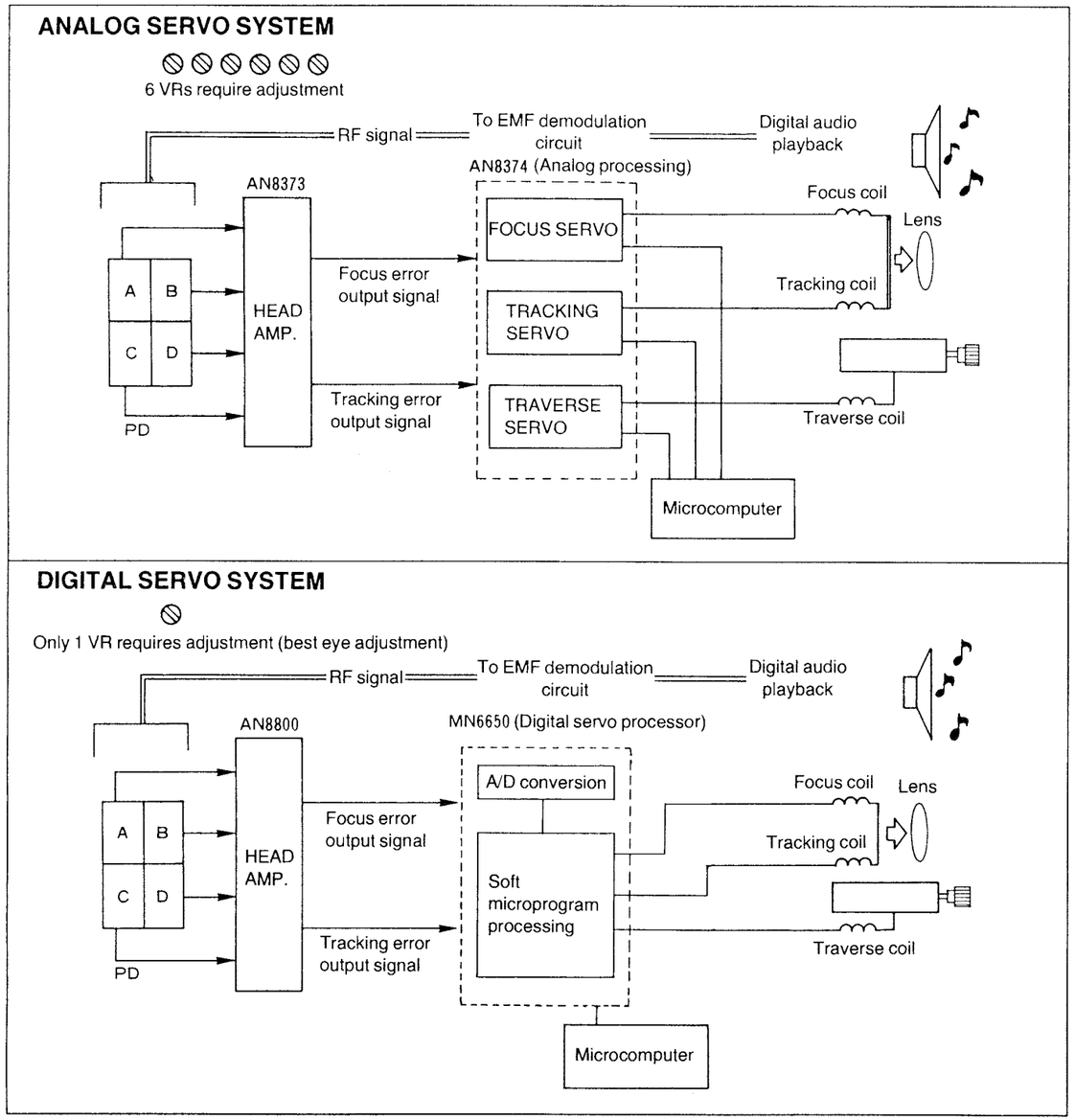

2. The servo processor IC MN6650 of the newly-developed digital servo circuit automatically performs the following adjustments which were originally adjusted in the conventional analog servo circuit:
(1) Focus offset, (2) Tracking offset, (3) Focus gain, (4) Tracking gain, and (5) Tracking balance. Therefore, you do not have to perform not the above-mentioned electrical adjustments manually. Only the best eye (PD balance) needs to be adjusted adjustment. You can obtain an optimum servo control for a disc to be played.
[You must perform the best eye (PD balance) adjustment manually.]

The following flow chart shows the sequence of automatic adjustments.

•Flow chart on automatic adjustment sequence

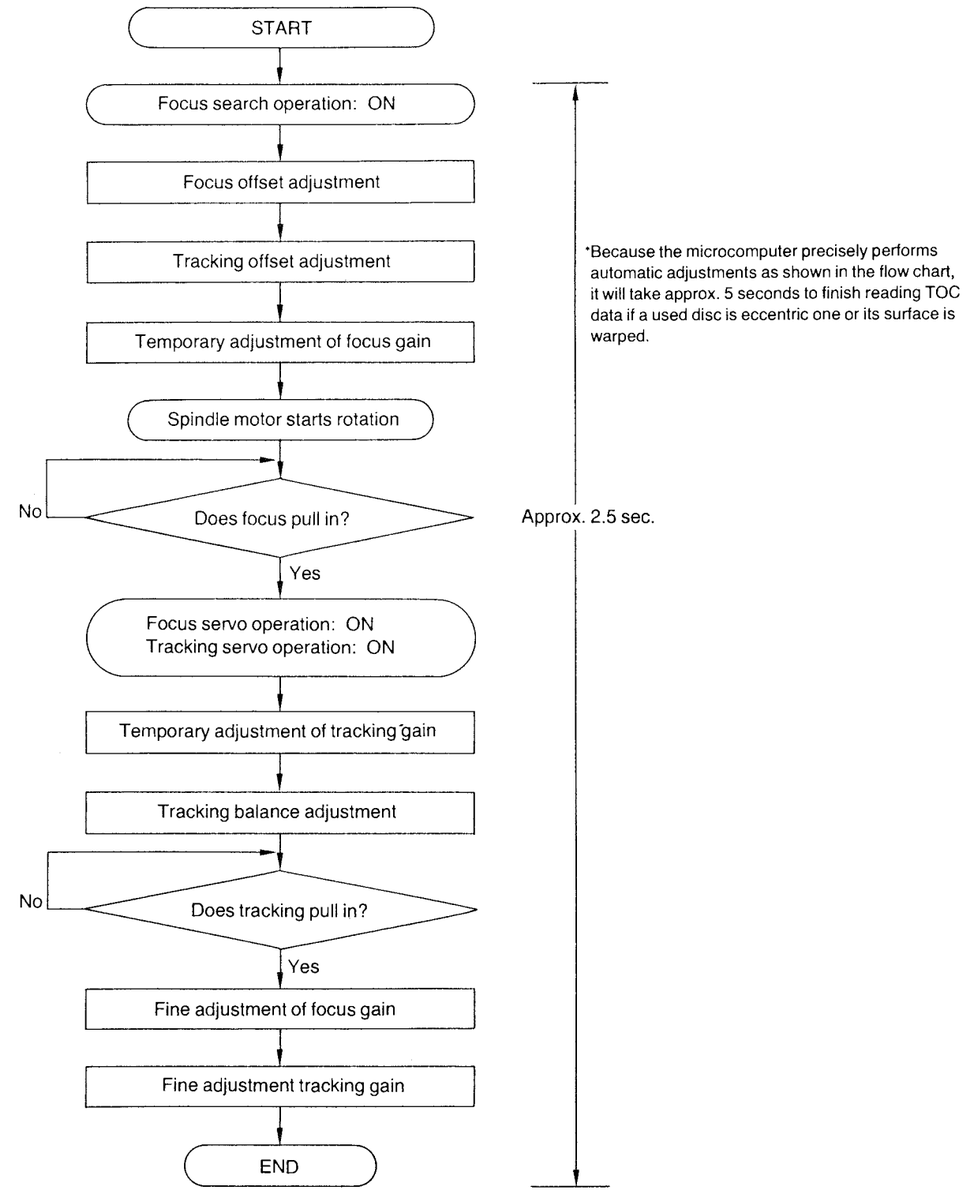

2. The servo processor IC MN6650 of the newly-developed digital servo circuit automatically performs the following adjustments which were originally adjusted in the conventional analog servo circuit:
(1) Focus offset, (2) Tracking offset, (3) Focus gain, (4) Tracking gain, and (5) Tracking balance. Therefore, you do not have to perform not the above-mentioned electrical adjustments manually. Only the best eye (PD balance) needs to be adjusted adjustment. You can obtain an optimum servo control for a disc to be played.
[You must perform the best eye (PD balance) adjustment manually.]

The following flow chart shows the sequence of automatic adjustments.

•Flow chart on automatic adjustment sequence

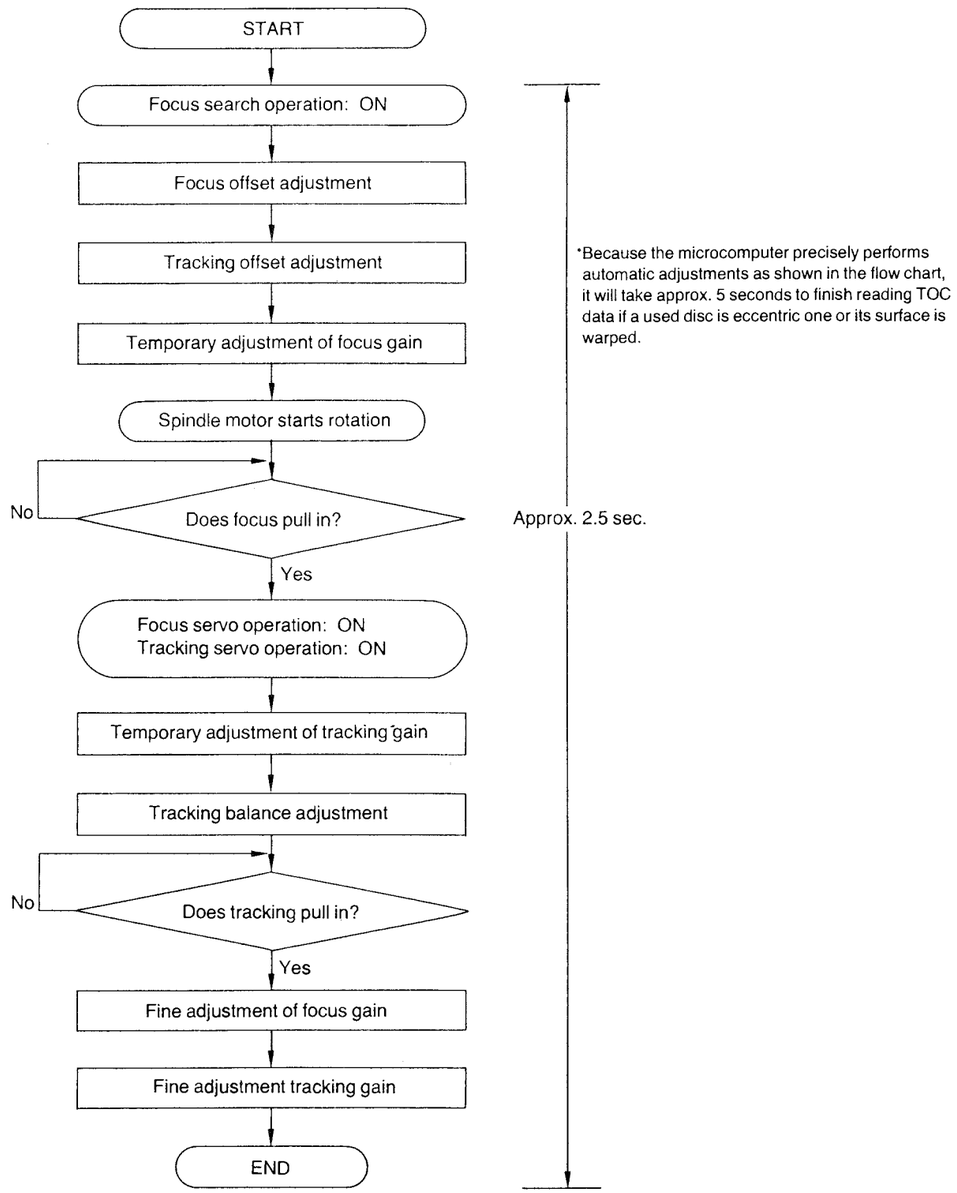

<CD SECTION>

■ CHECKING THE OPERATION PROBLEMS ON THE TRAVERSE DECK (OPTICAL PICKUP)

Make sure to follow the procedures below to check the operation problems of the traverse deck (optical pickup) before replacing it. Replace the traverse deck only after the problem is identified.

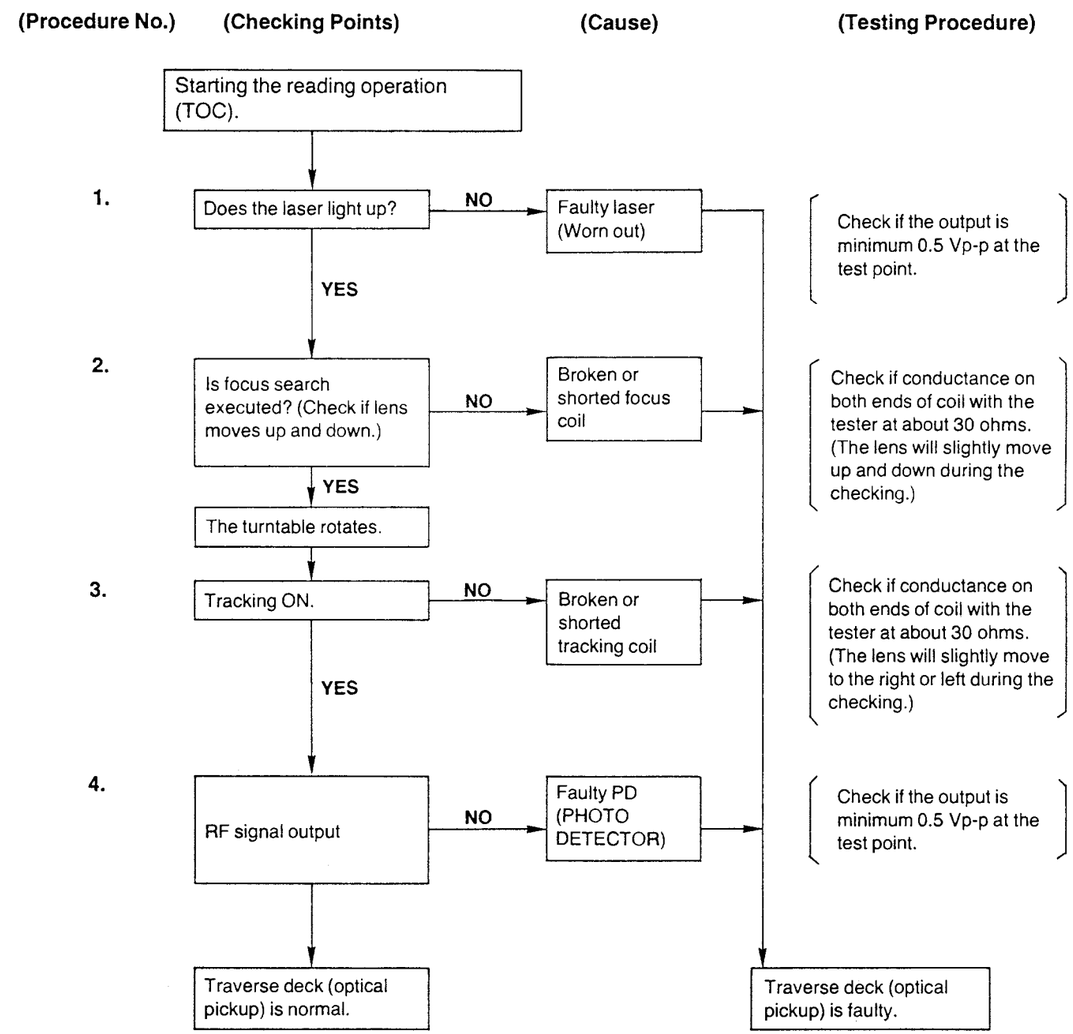

※Replace traverse deck.

•Check electrical circuit.
•CD is not adjusted properly. Adjust CD again.
(1) Mechanical adjustment.
(2) Focus balance adjustment (PD balance)
} Refer to page 26
•Check for flaws on disc or if it is warped or not centered.

※Checking Operations of Replaced Traverse Deck (New Traverse Deck)

a) **Check the operations described below on the traverse deck after replacing it.**

∗Checking Skip Search
1. Play an ordinary musical program disc.
2. Press the skip button to check for normal skip search operation (in both the forward and reverse directions).

∗Checking Manual Search
1. Play an ordinary musical program disc.
2. Press the manual search button to check for smooth manual search operations at either low or high speed (in both the forward and reverse directions).

∗Checking Using Defect Disc.
1. Play the 0.7 mm black dot and the 0.7 mm wedge on the defect test disc (SZZP1054C) and verify that no sound skip or noise occurs.
2. Play the middle tracks of the uneven test disc (SZZP1056C) and verify that no sound skip or noise occurs.

b) **If the operations are normal, CD adjustment are not required when the traverse deck is replaced.**

Note: CD adjustments are required in the cases below. (Mechanical adjustments are not necessary.) (See item 1–3 on page 26.)
- If audio is not played back continuously or noises occur after step (a) is excuted.
- If the adjustment VRs (VR701) were rotated before the traverse deck was replaced.
- If the ICs in the servo circuit or adjustment VRs were replaced.

■ MEASUREMENTS AND ADJUSTMENTS

Caution:
- It is very dangerous to look at or touch the laser beam. (Laser radiation is invisible.)
  With the unit turned "on", laser radiation is emitted from the pickup lens.
  Avoid exposure to the laser beam, especially when performing adjustments.

This CD player is powered by the amplifier (SU-CH7). To adjust it or check operations as a separate unit, follow the steps below.

1. Apply a power supply voltage of AC 23 V to TP1 and TP2.

2. Short-circuit TP1 (POWER) and Chassis (GND). (POWER supply switch: ON.)

HOW TO CONNECT

Note:
Apply a power supply voltage of AC 20 V to TP1 and TP2 by using a Voltage Controller. If it is not available, use a Power Supply Fixture (Continental Europe: SZZA1062C, Great Britain: SZZA1063C) instead.

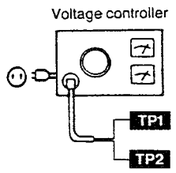

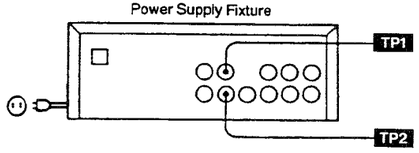

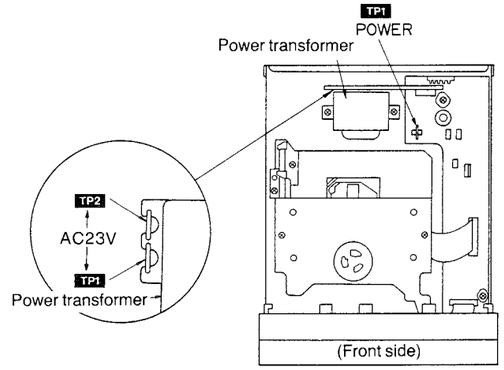

ADJUSTMENT POINT

- Please refer to Circuit Board Diagram for test point location

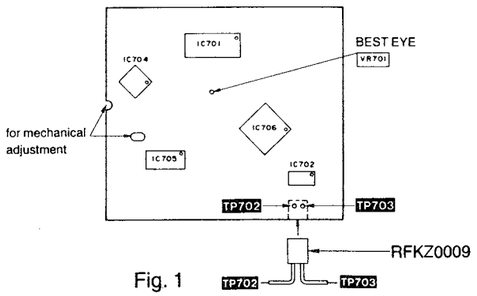

Fig. 1

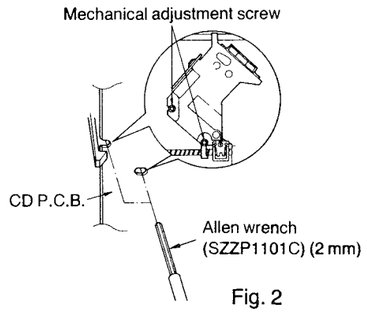

Fig. 2

Caution:
- It is very dangerous to look at or touch the laser beam. (Laser radiation is invisible.)
  With the unit turned "on", laser radiation is emitted from the pickup lens.
  Avoid exposure to the laser beam, especially when performing adjustments.

Measuring Instruments and Special Tools

- Test disc
  1. Playability test disc (SZZP1054C)
  2. Uneven test disc (SZZP1056C)
- Allen wrench (M2.0) (SZZP1101C)
- Oscilloscope

(1) MECHANICAL ADJUSTMENT

- When the traverse deck is replaced, making adjustments is not necessary. (The traverse deck ass'y is already adjusted.)
- Make adjustments to improve playability when the traverse deck has not been replaced. Make the electrical adjustments first.

1. Connect the oscilloscope's CH. 1 probe across TP702 (+) and TP703 (V-REF) on the Servo P.C.B.
   Oscilloscope setting:
   VOLT ..... 200 mV
   SWEEP ..... 0.5 µsec
   Input coupling ..... AC
2. Switch the player power **ON**, and play track **19** on the test disc (SZZP1056C).
3. Leave the player in Play mode and place it as shown in the figure on the right.
4. Alternately adjust the two mechanical adjusting screws with the 2.0 mm allen wrench (SZZP1101C) until the RF signal amplitude variation on the oscilloscope is minimized. (Shown in Fig. 2)
5. After completing the adjustment, lock the **mechanical adjustments** with lock paint (RZZOL01).

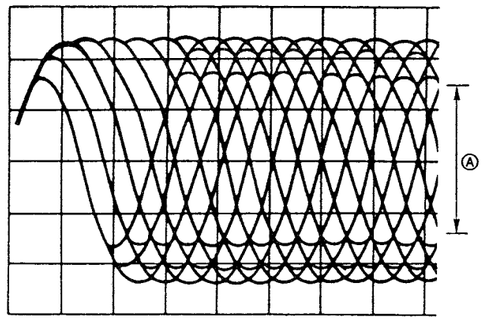

Ⓐ Minimize the variation of amplitude.

(2) BEST EYE (PD BALANCE) ADJUSTMENT

1. Connect the oscilloscope's CH. 1 probe across TP702 (+) and TP703 (V-REF) on the Servo P.C.B.
   Oscilloscope setting:
   VOLT ..... 200 mV
   SWEEP ..... 0.5 µsec
   Input coupling ..... AC
2. Switch the player power **ON**, and play the 1 kHz (track 1) on test disc (SZZP1054C).
3. Adjust **VR701** until the RF signal eye pattern amplitude is maximized.

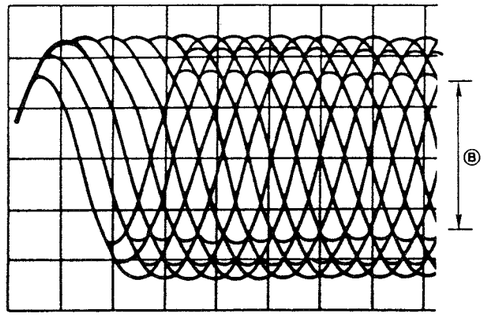

Ⓑ Maximize the amplitude

(3) CHECK OF PLAY OPERATION AFTER ADJUSTMENT

∗Checking Skip Search
1. Play an ordinary musical program disc.
2. Press the skip button to check for normal skip search operation (in both the forward and reverse directions).

∗Checking Manual Search
1. Play an ordinary musical program disc.
2. Press the manual search button to check for smooth manual search operations at either low or high speed (in both the forward and reverse directions).

∗Checking Playability
1. Play the 0.7 mm black dot and the 0.7 mm wedge on the test disc (SZZP1054C) and verify that no sound skip or noise occurs.
2. Play the middle tracks of the uneven test disc and verify that no sound skip or noise occurs.

■ TROUBLESHOOTING GUIDE

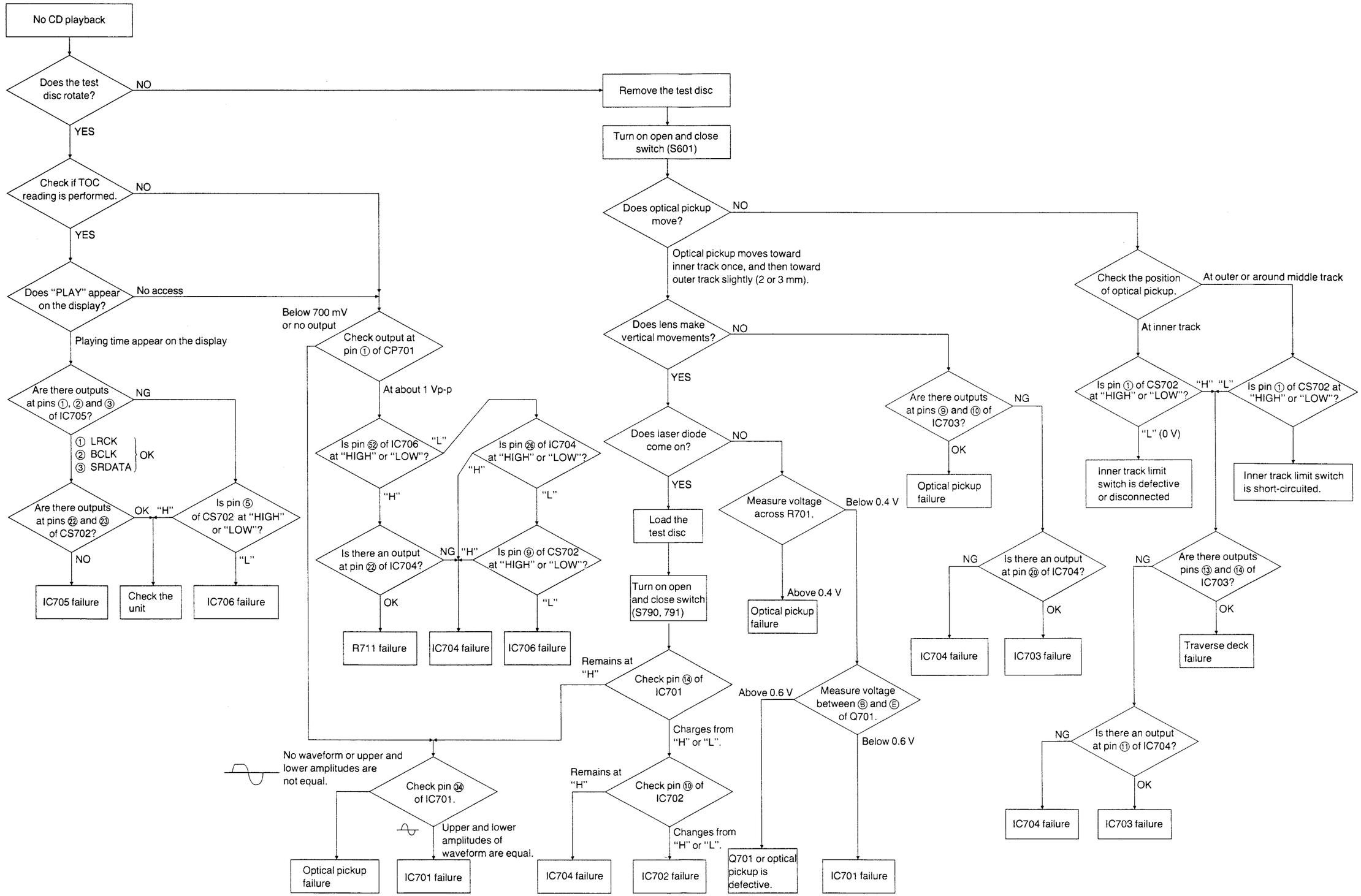

■ DESCRIPTION OF FL PANEL

•Grid assianment

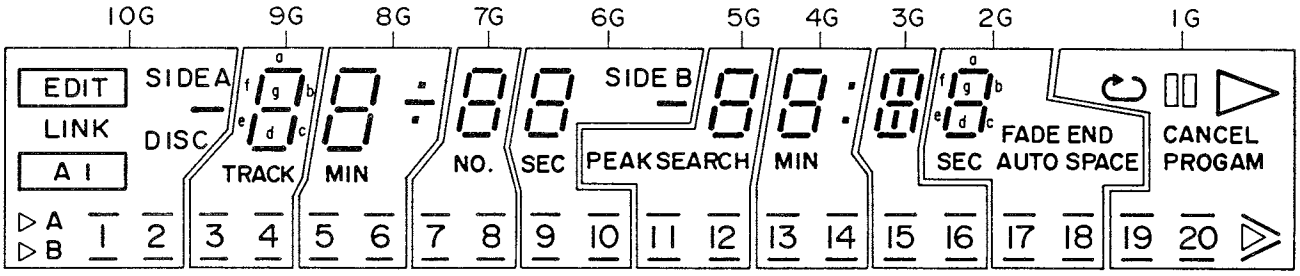

•Pin connection

Pin No.	54	53	52	51	50	49	48	47	46	45	44	43	42	41	40	39	38	37	36	35	34	33	32	31	30	29	28	27	26	25	24	23	22	21	20	19	18	17
Connection	F2	F2	NP	NP	NP	1G	2G	3G	4G	5G	6G	7G	8G	9G	10G	P16	P15	P14	P13	P12	P8	P9	P10	P11	NP	NP	NP	NP	NP	NP	NP	NP	NP	NP	NP	NP	NP	NP

Pin No.	16	15	14	13	12	11	10	9	8	7	6	5	4	3	2	1
Connection	P5	P6	P7	P4	P3	P2	P1	NP	NP	NP	NP	NP	NP	NP	F1	F1

•Anode connection

	10G	9G	8G	7G	6G	5G	4G	3G	2G	1G
P1	▷ (A)	a	a	a	a	a	a	a	a	▷
P2	▷ (B)	b	b	b	b	b	b	b	b	▯▯
P3	LINK	c	c	c	c	c	c	c	c	↻
P4	DISC	d	d	d	d	d	d	d	d	╲
P5	AI	e	e	e	e	e	e	e	e	▷
P6	EDIT A/B	f	f	f	f	f	f	f	f	╱
P7	—	g	g	g	g	g	g	g	g	CANCEL
P8	—	TRACK	MIN	NO.	SEC	SEARCH	MIN	¦	SEC	—
P9	—	—	—	—	—	PEAK	—	—	FADE END	—
P10	SIDE A	—	:	—	SIDE B	—	:	—	AUTO SPACE	PROGRAM
P11	(1)	(3)	(5)	(7)	(9)	(11)	(13)	(15)	(17)	(19)
P12	1	3	5	7	9	11	13	15	17	19
P13	(1)	(3)	(5)	(7)	(9)	(11)	(13)	(15)	(17)	(19)
P14	(2)	(4)	(6)	(8)	(10)	(12)	(14)	(16)	(18)	(20)
P15	2	4	6	8	10	12	14	16	18	20
P16	(2)	(4)	(6)	(8)	(10)	(12)	(14)	(16)	(18)	(20)

■ FUNCTIONS OF IC TERMINALS

•IC401 (MN1554PKL1)

Pin No.	Mark	I/O Division	Function
1	MUTE RELAY	—	(Not used, open)
2	$\overline{\text{PLUNGER}}$	—	(Not used, open)
3	$\overline{\text{SYNC}}$	—	(Not used, open)
4	$\overline{\text{SIRQ}}$	I	(Not used, connected to power supply)
5	BLKCK	I	Sub-code block clock signal (f BLKCK=75 Hz)
6	SQCK	O	External clock for sub-code Q resister
7	SBO	—	(Not used, open)
8	SUB Q	I	Sub-code Q code input
9	RESET	I	Reset input
10	CLOSE SW	I	Disc holder "close" detection
11	OPEN SW	I	Disc holder "open" detection
12	REST SW	I	Reset switch signal input
13	NC	—	Not connected
14	$\overline{\text{CLOSE}}$	O	Loading motor "close" command
15	$\overline{\text{OPEN}}$	O	Loading motor "open" command
16 ~ 24	NC	—	Not connected (Pin 17 is connected to GND)
25	V_{DD}	I	Power supply
26 ~ 30	NC	—	Not connected (Pin 29, 30 is connected to GND)
31	FUTA SW	—	(Not used, connected to resistance)
32	MODE	—	(Not used, connected to GND)
33	STAT	I	Status signal (CRC, CVE, CLVS, TTSTOP, FCLV, SQOK)
34	$\overline{\text{TLOCK}}$	I	Tracking servo pull-in signal (L: pull-in)
35	$\overline{\text{FLOCK}}$	I	Focas servo pull-in signal (L: pull-in)
36	SENSE	I	Sense signal
37	$\overline{\text{RECV}}$	I	External data receipt command signal
38	$\overline{\text{SEND}}$	I	External data transmission command signal
39	ACK	I	Data discrimination signal
40	CLK	I	Data lock signal
41 ~ 44	DATA 0 ~ DATA 3	O	Key scan signal
45 ~ 52	NC	—	Not connected
53	OSC 2	I	Clock terminal (4.2336 MHz)
54	OSC 1		
55	X1	—	(Not sued, open)
56	X0	—	(Not used, open)
57	GND	—	GND
58	DMUTE	O	Muting output (Hi mute)
59	MDATA	O	Micro computer command data output
60	MCLK	O	Micro computer command clock signal output
61	$\overline{\text{MLD}}$	O	Micro computer command load signal output
62	D. OUT	—	(Not used, open)
63	EMPH	—	(Not used, open)
64	SERVO RST	—	Not connected

•IC601 (MN187204PKW)

Pin No.	Mark	I/O Division	Function
1 ~ 7	SEG 6 ~ SEG 0	O	FL segment signal output
8	VPP	I	FL motor power supply
9	VDD	I	Power supply
10	OSC 2	I	Clock terminal (4.2336 MHz)
11	OSC 1		
12	GND	—	GND
13 • 14	NC	—	Not connected
15 ~ 18	DATA 3 ~ DATA 0	O	Key scan data output
19	CLK	O	Data lock signal
20	ACK	O	Data discrimination signal
21	/SEND	O	External data transmission command signal
22	/RECV	O	External data receipt command signal
23 • 24	NC	—	Not connected
25	BSDT O	O	System data control
26	BSDT I	I	
27	BSCK O	O	System clock control
28	BSCK I	I	
29	RESET	I	Reset input
30 ~ 35	KEY 5 ~ KEY 0	I	Key scan data input
36	NC	—	Not connected
37	CM	—	GND
38	PCON	O	Servo circuit power switch
39 ~ 45	NC	—	Not connected
46 ~ 55	DGT 0 ~ DGT 9	O	FL digit signal output
56 ~ 64	SEG 15 ~ SEG 7	O	FL segment signal output

•IC701 (AN8800SC-E2)

Pin No.	Mark	I/O Division	Function
1	LDG	I	Loop gain switch for auto pwer control VCC: NORMAL OPEN: +20 dB This machine for "NORMAL"
2	LDP	I	Monitor PD polequality switch for auto power control OPEN: P sub PD GND: N sub PD This machine for "P sub PD"
3	LD	O	Laser diode control output
4	LPD	I	Laser diode power monitor PD signal input
5	GND	—	Analog GND
6	LDON	I	Laser diode auto power control H: ON L: OFF
7	AMPI	I	Reverse amplifier input
8	AMPO	O	Reverse amplifier input
9	RFIN	I	RF AGC input (H: light level)
10	RFEQ	—	GND
11	C.AGC	—	Condenser connection for RF AGC loop filter
12	ARF	O	RF output after AGC (H: light level)
13	C.SBDO	—	Low level detected wave condenser connection for dark level drop-out detection
14	/RFDET	O	RF detection output
15	BDO	O	Black dropout detection output
16	VCC	—	Power supply (+5 V)
17	SDO	O	System dropout dection output
18	VAD+	O	Plus power supply for A/D converter
19	VREF	O	Reference voltage of servo error signal
20	VAD−	O	Power supply for A/D converter
21	OFTR	O	Off track detction output
22	PLAY	I	"Play" signal input (H: ON, L: OFF)
23	WVEL	I	High speed input (H: high speed L: normal)
24	TES	I	Tracking error shunt signal input (H: shunt L: output)
25	PTO	O	Traverse speed detection signal output
26	PTI	I	Traverse speed detection signal input
27	PBO	O	Potention buffer output
28	PBI	I	Potention buffer input
29	CROSS	O	Tracking error cross detection output
30	TE	O	Tracking error output
31	TEBPF	I	Tremble detection output
32	TBAL	I	Tracking balance adjustment
33	VDET	O	Viblation detection output
34	FE	O	Focus error output
35	FBL2	—	Focus balance adjustment 2
36	FBL1	—	Focus balance adjustment 1
37	VCC	—	Power supply (+5 V)
38	GND	—	GND
39	PDBD	I	Photo detector current input
40	PDA	I	Photo detector current input
41	PDAD	I	Photo detector current input
42	PDB	I	Photo detector current input

•IC702 (TCA0372DM2R)

Pin No.	Mark	I/O Division	Function
1	GND	—	Connected to P.GND
2	NC	—	———
3	VOUT1	O	Spindle motor drive signal output
4	VCC	I	Power supply (+7.5 V)
5	VOUT2	O	Spindle motor drive signal output
6	NC	—	Connected to P.GND
7	NC	—	Connected to P.GND
8	GND	—	Connected to P.GND
9	GND	—	Connected to P.GND
10	NC	—	Connected to P.GND
11	−VIN2	I	Spindle motor drive signal input
12	+VIN2	I	Spindle motor drive signal input
13	+VIN1	I	Spindle motor drive signal input
14	−VIN1	I	Spindle motor drive signal input
15	NC	—	Connected to P.GND
16	GND	—	Connected to P.GND

•IC703 (AN8377N)

Pin No.	Mark	I/O Division	Function
1	PVCC	I	Driver power supply (+5 V)
2	VCC	I	Power supply (+5 V)
3	TB	O	External transistor base driving output
4	VMON	O	Voltage (+5 V) output
5	TVDI	I	Traverse error signal input
6	FDI	I	Focus error signal input
7	TDI	I	Tracking error signal input
8	VREF	I	Reference voltage input
9	TD−	O	Inverting output of tracking driver
10	TD+	O	Non-inverting output of tracking driver
11	FD−	O	Inverting output of focus driver
12	FD+	O	Non-inverting output of focus driver
13	TVD−	O	Inverting output of traverse driver
14	TVD+	O	Non-inverting output of traverse driver
15	RESET	O	Reset signal output
16	PC	I	PC input

•IC704 (MN6650)

Pin No.	Mark	I/O Division	Function
1	TES	O	Tracking error shunt signal (H: Shunt)
2	PLAY	O	"Play" signal (H: play)
3	/RFDET	I	RF detection signal (L: detection)
4	DO	I	Dropout signal (H: dropout)
5	OFT	I	Off track signal (H: off track)
6	ARF	I	RF signal input
7	WVEL	O	High speed status signal (H: high speed)
8	PBO	I	Potension buffer signal input (Analog input)
9	TE	I	Tracking error signal input (Analog input)
10	FE	I	Focus error signal input (Analog input)
11	VR2	I	Reference voltage for A/D (Low reverse)
12	VR1	I	Reference voltage for A/D (High reverse)
13	LDON	O	Laser "ON" signal (H: ON)
14	VSS	I	Power supply (Digital system OV)
15	AVSS	I	Power supply (Analog system OV)
16	AVDD	I	Power supply (Analog system +5 V)
17	VDD	I	Power supply (Digital system +5 V)
18	TRV	O	Traverse force transmission output
19	TVD	O	Traverse drive output
20	FOD	O	Focus drive output
21	TRD	O	Tracking drive output
22	KICK	O	Kick pulse output
23	/TEST	I	Test terminal ("L", normal)
24	VSS	I	Power supply (Digital system OV)
25	CLVS	I	Spindle servo condition signal (H: CLV L: Rough servo)
26	/TRON	O	Tracking servo "ON" signal (L: ON)
27	MDATA	I	Micro computer command data input
28	MCLK	I	Micro computer command clock signal input
29	MLD	I	Micro computer command load signal input (L: load)
30	SENSE	O	Sense signal input
31	/FLOCK	O	Focus servo pull-in signal (L: take-in condition)
32	/TLOCK	O	Tracking servo pull-in signal (L: take-in condition)
33	/RST	I	Reset input (L: reset)
34	XI	I	Clock input (fXI=16.9344 MHz)
35	T0	O	Test terminal ("Open", normal)
36	T1	O	Test terminal ("Open", normal)
37	T2	O	Test terminal ("Open", normal)
38	T3	O	Test terminal ("Open", normal)
39	T4	I	Test terminal ("L", normal)
40	T5	I	Test terminal ("L", normal)
41	T6	I	Test terminal ("L", normal)
42	VDET	I	Vibration detection signal input (H: detection)
43	TBAL	O	Tracking balance adjustment output
44	TRCRS	I	Track cross signal input

•IC705 (MN6475)

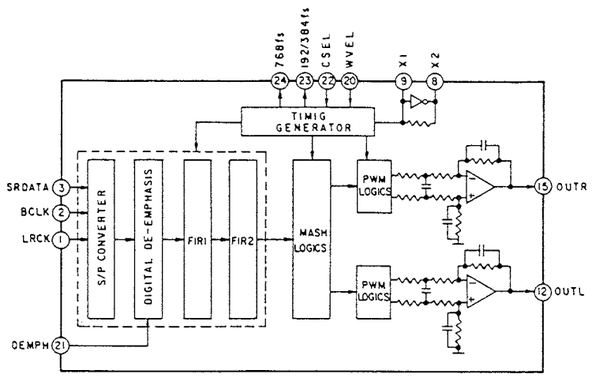

Pin No.	Mark	I/O Division	Function
1	LRCK	I	L.R detection signal
2	BCLK	I	Bit clock for SRDATA
3	SRDATA	I	Serial data input
4	COT1	—	Connected to D.GND
5	COT2	—	Connected to D.GND
6	TEST	—	Connected to D.GND
7	VDD	I	Digital system power supply (+5 V)
8	×2	—	Crystal oscillator connection
9	×1	—	Crystal oscillator connection
10	VSS	—	Connected to GND
11	AVDDL	I	Power supply (+5 V)
12	OUT.L	O	Lch output
13	AVSSL	—	Connected to A.GND
14	AVSSR	—	Connected to A.GND
15	OUT.R	O	Rch output
16	AVDDR	I	Power supply (+5 V)
17	/RST	I	Reset signal input (L: reset)
18	PWM	—	NC
19	CP	—	Connected to D.GND
20	WVEL	I	High speed status signal input (H: high speed)
21	DEMPH	I	De-emphasis ON signal (H: ON)
22	CSEL	I	Test terminal
23	192FS/ 384FS	—	NC
24	768FS	O	Clock output

Pin No.	Mark	I/O Division	Function
1	LRCK	I	L/R clock input
2	BCLK	I	Serial input bit clock input
3	SRDATA	I	Serial input date input
4	COT1	—	Test mode input terminal 1 (normal: L)
5	COT2	—	Test mode input terminal 2 (normal: L)
6	TEST	—	Test mode input terminal 3 (normal: L)
7	DVDD	I	Digital system power supply (+5 V)
8	×2	—	Crystal oscillator connection
9	×1	—	Crystal oscillator connection
10	DVSS	—	Digital system ground terminal
11	AVDDL	I	Analog system power supply 1 (+5 V)
12	OUTL	O	Analog output (Lch)
13	AVSSL	—	Analog system ground terminal 1
14	AVSSR	—	Analog system ground terminal 2
15	OUTR	O	Analog output (Rch)
16	AVDDR	I	Analog system power supply 2 (+5 V)
17	RSTB	I	Reset terminal (L: reset)
18	PWM	O	PWM output
19	TP	—	Test terminal (normal: L)
20	WVEL	I	Motion speed switch (H: high speed)
21	DEMPH	I	Digital de-emphasis ON/OFF terminal (H: ON)
22	CSEL	I	Output clock frequency selection terminal of CK192
23	CK192	O	Clock devided frequercy output
24	CK768	O	Clock output

•IC706 (MN6626)

Pin No.	Mark	I/O Division	Function
1	AVSS	I	GND for DSL, PLL circuit (OV)
2	IRFF	I	Reference electric current input
3	ARF	I	RF signal input
4	DRF	I	DSL bias
5	DSLF	O	DSL loop filter
6	PLLF	—	PLL loop filter
7	AVDD	I	Power supply for DSL. PLL
8	RSEL	I	RF signal quality decision terminal
9 ~ 16	TBUS7 ~ TBUS0	O	Test terminal (normal: Open)
17	FLAG	O	Error/frag output
18	IPFLAG	O	Interpolation flag
19	FCLK	O	Crystal frame clock
20	BTTCK	O	Byte clock
21	WDCK	O	Ward clock
22	/RST	I	Reset input
23	TX	O	Digital audio interface output
24	LDG	O	Lch deglitch signal
25	RDG	O	Rch deglitch signal
26	SRDATA	O	Serial data signal
27	SCK	O	Bit clock for SRDATA
28	LRCK	O	L, R discrimination signal
29	XCK	O	Crystal oscillator clock output
30	PMCK	O	1/192 devided frequency clock signal of crystal oscillator
31	CSEL	I	Test terminal (normal: L)
32	PSEL	I	Test terminal (normal: L)
33	X1	—	Crystal oscillator circuit input
34	X2	—	Crystal oscillator circuit output
35	VSS	I	Power supply (OV)
36	SUBQ	O	Sub-code Q-code output
37	SQCK	I	External clock for sub-code Q resister
38	/CLDCK	O	Sub-code frame clock signal
39	BLKCK	O	Sub-code block clock signal
40	DEMPH	O	De-emphasis ON signal
41	MEMP	I	Emphasis signal input (For digital audio interface)
42	MLD	I	Micro computer command load signal input (L: load)

Pin No.	Mark	I/O Division	Function
43	MCLK	I	Micro computer command clock signal input
44	MDATA	I	Micro computer command data input
45	DMUTE	I	Muting input
46	SMCK	O	MSEL=½ devided frequercy clock signal of crystal oscillator when "H" level MSEL=¼ devided frequency clock signal of crystal oscillator when "L" level
47	STAT	O	Status signal
48	CRC	O	Sub-code CRC check result (H: OK, L: NG)
49	SUBC	O	Sub-code serial output data
50	SBCK	I	Clock input for sub-code serial output
51	/TRON	I	Tracking servo ON signal
52	CLVS	O	Spindle servo phase synchronization condition signal (H: CLV L: rough servo)
53	PC	O	Sprindle motor ON signal (L: ON)
54	ECM	O	Spindle motor drive signal (Force mode output)
55	ECS	O	Spindle motor drive signal (Servo error signal output)
56	VDD	I	Power supply (+5 V)
57	/TEST	I	Test terminal (normal: H)
58	SSEL	I	SUBQ terminal Output mode switch terminal (H: Q code buffer mode)
59	MSEL	I	SMCK terminal output frequency switch terminal
60	RESY	O	Resynchronization signal of frame synchronization (H: synchronization, L: not)
61	DO	I	Drop-out signal (H: drop-out)
62	EFM	O	EFM signal output
63	PCK	O	PLL extract clock output
64	PDO	—	Phase comparison signal of EFM signal and PCK signal

■ REPLACEMENT PARTS LIST

Notes : * Important safety notice:
Components identified by ⚠ mark have special characteristics important for safety. When replacing any of these components use only manufacturer's specified parts.
* The parenthesized indications in the Remarks columns specify the areas. (Refer to the cover page for area.) Parts without these indications can be used for all areas.
・Warning: This product uses a laser diode. Refer to caution statements on page 2.

Ref. No.	Part No.	Part Name & Description	Remarks
		INTEGRATED CIRCUIT(S)	
IC1	LM2940T5	I. C, REGULATOR	
IC401	MN1554PKL1	I. C, SYSTEM CONTROL	
IC601	MN187204PKW	I. C, SYSTEM CONT. &FL DRIVE	
IC701	AN8800SCE2	I. C, SERVO AMP.	
IC702	TCA0372DM2R	I. C, SPINDLE MOTOR DRIVE	
IC703	AN8377N	I. C, TRAVERSE MOTOR DRIVE	
IC704	MN6650	I. C, DIGITAL SERVO PROCESSOR	
IC705	MN6475	I. C, DIGITAL FILTER	
IC706	MN6626	I. C, DIGITAL SIGNAL PRO.	
IC790	TA7291S	I. C, MOTOR DRIVE	
IC801	SVIBA4558F	I. C, L. P. FILTER AMP.	
		IC PROTECTOR(S)	
ICP12	SRUN20T	IC PROTECTOR	
		TRANSISTOR(S)	
Q1	DTA114ESTP	TRANSISTOR	
Q2	2SD1862QRTV6	TRANSISTOR	
Q3	2SA933SQR	TRANSISTOR	
Q4-6	2SD2037EFTA	TRANSISTOR	
Q7	DTC124EST	TRANSISTOR	
Q8	2SB1238QSTV6	TRANSISTOR	
Q9	2SC1740SQ	TRANSISTOR	
Q10	2SA933SQR	TRANSISTOR	
Q11	2SD2037EFTA	TRANSISTOR	
Q421, 422	2SC1740SQ	TRANSISTOR	
Q431	2SC1740SQ	TRANSISTOR	
Q432	DTC144EKT96	TRANSISTOR	
Q433	2SC1740SQ	TRANSISTOR	
Q434	DTC144EKT96	TRANSISTOR	
Q701	2SB709S	TRANSISTOR	
Q803, 804	2SD2144S	TRANSISTOR	
Q852	DTA124ESTP	TRANSISTOR	
Q853	DTC114ESTP	TRANSISTOR	
Q854	DTA114ESTP	TRANSISTOR	
		DIODE(S)	
D1-3	1SR35200TB	DIODE	⚠
D5	1SR35200TB	DIODE	⚠
D7	1SS254TA	DIODE	
D8	MA4056MTA	DIODE	

Ref. No.	Part No.	Part Name & Description	Remarks
D9	1SR35200TB	DIODE	
D10	MA4082LTA	DIODE	
D11	MA4270	DIODE	
D12	MA4056MTA	DIODE	
D13, 14	MA4068M	DIODE	
D401	MA4039HTA	DIODE	
D402	1SS254TA	DIODE	
D603, 604	MA4043M	DIODE	
D611, 612	1SS254TA	DIODE	
D701	MA110TW	DIODE	
D801, 802	1SS254TA	DIODE	
D852	1SS254TA	DIODE	
D854, 855	1SS254TA	DIODE	
		VARIABLE RESISTOR(S)	
VR701	EVNDXAA00B14	V. R, BEST EYE	
		COIL(S)	
L431, 432	RLQZP3R3KT-Y	COIL	
		OSCILLATOR(S)	
X601	EFOGC4234T4	OSCILLATOR	
X701	RSXZ33M8M01T	OSCILLATOR	
		DISPLAY	
FL601	RSL0080-F	DISPLAY	
		SWITCH(ES)	
S601	EVQ21405R	SW, OPEN/CLOSE	
S602	EVQ21405R	SW, PAUSE	
S603	EVQ21405R	SW, STOP	
S604	EVQ21405R	SW, PLAY	
S605	EVQ21405R	SW, SKIP (REV)	
S606	EVQ21405R	SW, SKIP (FWD)	
S607	EVQ21405R	SW, SEARCH (REV)	
S608	EVQ21405R	SW, SEARCH (FWD)	
S612	EVQ21405R	SW, NORMAL/TAPE LENGTH	
S613	EVQ21405R	SW, AI	
S701	SSHD5-E	SW, REST	
S790	RSH1A005	SW, LOADING CLOSE DETECT	
S791	RSH1A005	SW, LOADING OPEN DETECT	

Ref. No.	Part No.	Part Name & Description	Remarks
		CONNECTOR(S)	
CN11	RJU057W009	SOCKET(9P)	
CN301	RJS1A6823	SOCKET(23P)	
CN302	EMCS0660MT6	CONNECTOR(6P)	
CN601	RJS20Q11ZA	SOCKET(20P)	
CP11	RJT057W009-1	CONNECTOR(9P)	
CP601	RJS20Q11ZA	SOCKET(20P)	
CP701, 702	RJP2G17ZA	CONNECTOR(2P)	
CP703	RJP4G17ZA	CONNECTOR(4P)	
CS701	RJU035T016-1	SOCKET(16P)	
CS702	RJS1A6723-1Q	SOCKET(23P)	
CP790	RJP6G17ZA	PLUG(6P)	
JK801	RJT055K011	CONTROL TERMINAL	
		TRANSFORMER(S)	
T11	RTP1K4J021	POWER TRANSFORMER	⚠

Notes : * Capacity valuse are in microfarads (uF) unless specified otherwise, P=Pico-farads(pF) F=Farads(F)
* Resistance values are in ohms, unless specified otherwise, 1K=1,000(OHM) , 1M=1,000k(OHM)

Ref. No.	Part No.	Values & Remarks
		RESISTORS
R1	ERD2FCVJ6R8T	1/4W 6.8 ⚠
R2	ERDS2TJ473	1/4W 47K
R3	ERDS2TJ223	1/4W 22K
R4	ERDS2TJ102	1/4W 1K
R5	ERDS2TJ473	1/4W 47K
R6	ERDS2TJ472	1/4W 4.7K
R7	ERDS1FVJ271T	1/2W 270 ⚠
R8, 9	ERDS2TJ1R0	1/4W 1.0
R10	ERDS2TJ3R9T	1/4W 3.9
R11, 12	ERD2FCVG221T	1/4W 220 ⚠
R13	ERDS2TJ222	1/4W 2.2K
R14, 15	ERDS2TJ332	1/4W 3.3K
R16	ERDS2TJ102	1/4W 1K
R17	ERD2FCVJ6R8T	1/4W 6.8
R18, 19	ERDS2TJ1R0	1/4W 1.0
R20	ERD2FCVG220T	1/4W 22
R303	ERDS2TJ560T	1/4W 56
R304	ERDS2TJ102	1/4W 1K
R401-408	ERDS2TJ472	1/4W 4.7K
R419	ERDS2TJ472	1/4W 4.7K
R420	ERDS2TJ105T	1/4W 1M
R421	ERDS2TJ221	1/4W 220
R422-425	ERDS2TJ472	1/4W 4.7K
R426	ERDS2TJ102	1/4W 1K
R427	ERDS2TJ472	1/4W 4.7K

Ref. No.	Part No.	Values & Remarks
R432	ERDS2TJ470	1/4W 47
R433, 434	ERDS2TJ393	1/4W 39K
R435	ERDS2TJ223	1/4W 22K
R436	ERDS2TJ470	1/4W 47
R438	ERDS2TJ470	1/4W 47
R439, 440	ERDS2TJ393	1/4W 39K
R441	ERDS2TJ223	1/4W 22K
R442	ERDS2TJ470	1/4W 47
R443	ERDS2TJ100	1/4W 10
R451	ERDS2TJ103	1/4W 10K
R452, 453	ERDS2TJ102	1/4W 1K
R600-605	ERDS2TJ472	1/4W 4.7K
R606	ERDS2TJ105T	1/4W 1M
R607-614	ERDS2TJ221	1/4W 220
R701	ERJ6GEYJ100	1/10W 10
R702	ERJ6GEYJ471V	1/10W 470
R703	ERJ6GEYJ102V	1/10W 1K
R704	ERJ6GEYJ103V	1/10W 10K
R706	ERJ6GEYJ473V	1/10W 47K
R707	ERJ6GEYJ222V	1/10W 2.2K
R708	ERJ6GEYJ683V	1/10W 68K
R709	ERJ6GEYJ122V	1/10W 1.2K
R710	ERJ6GEYJ182V	1/10W 1.8K
R711	ERJ6GEYJ473V	1/10W 47K
R712	ERJ6GEYJ471V	1/10W 470
R714	ERJ6GEYJ473V	1/10W 47K
R715	ERJ6GEYJ223V	1/10W 22K
R716	ERJ6GEYJ104V	1/10W 100K

Ref. No.	Part No.	Values & Remarks
R717	ERJ6GEYJ682V	1/10W 6.8K
R718	ERJ6GEYJ223V	1/10W 22K
R719	ERJ6GEYJ123V	1/10W 12K
R720	ERJ6GEYJ273V	1/10W 27K
R721	ERJ6GEYJ823	1/10W 82K
R722	ERJ6GEYJ102V	1/10W 1K
R723, 724	ERJ6GEYJ104V	1/10W 100K
R725	ERJ6GEYJ471V	1/10W 470
R726	ERJ6GEYJ102V	1/10W 1K
R729, 730	ERJ6GEYJ102V	1/10W 1K
R731	ERJ8GEYJ470V	1/8W 47
R732	ERJ6GEYJ562V	1/10W 5.6K
R733	ERJ6GEYJ332V	1/10W 3.3K
R734	ERJ6GEYJ562V	1/10W 5.6K
R735	ERJ6GEYJ222V	1/10W 2.2K
R736	ERJ6GEYJ682V	1/10W 6.8K
R737-739	ERJ6GEYJ562V	1/10W 5.6K
R741-743	ERJ6GEYJ102V	1/10W 1K
R744	ERJ6GEYJ393V	1/10W 39K
R745, 746	ERJ6GEYJ102V	1/10W 1K
R747	ERJ6GEYJ473V	1/10W 47K
R748	ERJ8GEYJ180V	1/8W 18
R817, 818	ERDS2TJ243T	1/4W 24K
R819, 820	ERDS2TJ473	1/4W 47K
R821, 822	ERDS2TJ273	1/4W 27K
R823, 824	ERDS2TJ473	1/4W 47K
R825, 826	ERDS2TJ122	1/4W 1.2K
R827, 828	ERDS2TJ473	1/4W 47K

Ref. No.	Part No.	Values & Remarks
R829, 830	ERDS2TJ471	1/4W 470
R833, 834	ERDS2TJ102	1/4W 1K
R841, 842	ERDS2TJ104	1/4W 100K
R852	ERDS2TJ221	1/4W 220
R853	ERDS2TJ102	1/4W 1K
R854, 855	ERDS2TJ472	1/4W 4.7K
		CAPACITORS
C1, 2	ECBT1E103ZF	25V 0.01U
C3	ECEA1EU222B	25V 2200U
C4	ECEA1EU101	25V 100U
C5	ECBT1H102KB5	50V 1000P
C6	ECEA0JKA470B	6.3V 47U
C7, 8	ECBT1H102KB5	50V 1000P
C9	ECEA1AGE101B	10V 100U
C10	ECEA1AU221	10V 220U
C11	ECEA1CGE470B	16V 47U
C12	ECEA0JU221	6.3V 220U
C13, 14	ECBT1H102KB5	50V 1000P
C15, 16	ECEA1AU470	10V 47U
C17	ECEA1HU101	50V 100U
C18	ECBT1H102KB5	50V 1000P
C19	ECEA0JKA470B	6.3V 47U
C303-305	ECBT1H102KB5	50V 1000P
C402	ECBT1H104ZF5	50V 0.1U
C421	ECEA1HKA010B	50V 1U
C434	ECBT1H104ZF5	50V 0.1U
C601	ECBT1H104ZF5	50V 0.1U
C602	ECBT1E103ZF	25V 0.01U
C603-606	ECBT1H104ZF5	50V 0.1U
C701	ECEA0JKA220	6.3V 22U
C702	ECEA0JKS470	6.3V 47U
C703	ECEA0JKS101I	6.3V 100U
C709	ECUV1C224KBM	16V 0.22U
C710	ECUV1C104MBM	16V 0.1U
C711	ECUE1E103MBN	25V 0.01U
C713	ECEA1CSN4R7I	16V 4.7U
C714	ECEA1HKS010	50V 1U
C715	ECUE1H472KBN	50V 4700P
C716	ECUE1C473KBN	16V 0.047U
C717	ECUE1H681KBN	50V 680P
C718	ECEA1AKS101I	10V 100U
C719	ECUE1E103MBN	25V 0.01U
C720	ECUE1E153MBN	25V 0.015U
C721	ECUE1E103MBN	25V 0.01U
C722	ECEA0JKS470	6.3V 47U
C723	ECUV1C104MBM	16V 0.1U
C724	ECUV1E333MBN	H 25V 0.033U
C725	ECUE1E103MBN	25V 0.01U
C726	ECUE1H471KBN	50V 470P
C727	ECEA0JKS470	6.3V 47U

Ref. No.	Part No.	Values & Remarks
C728, 729	ECUV1C104MBM	16V 0.1U
C730	ECUV1C224KBM	16V 0.22U
C731	ECEA0JKS331I	6.3V 330U
C732	ECUE1H102MBN	50V 1000P
C733	ECEA0JKS101I	6.3V 100U
C734	ECUE1E223MBN	25V 0.022U
C735	ECUV1C224KBM	16V 0.22U
C737	ECUV1C224KBM	16V 0.22U
C738	ECEA0JKS101I	6.3V 100U
C739	ECUE1E103MBN	25V 0.01U
C740	ECUE1H472MBN	50V 4700P
C741	ECUV1C224KBM	16V 0.22U
C742	ECUV1C104MBM	16V 0.1U
C743	ECEA0JKS331I	6.3V 330U
C744, 745	ECUE1H102KBN	50V 1000P
C746	ECEA0JKS101I	6.3V 100U
C747	ECUV1C104MBM	16V 0.1U
C748	ECEA1HKS010	50V 1U
C749	ECUE1E103MBN	25V 0.01U
C750	ECUE1H050DCN	50V 5P
C751	ECUV1C224KBM	16V 0.22U
C752	ECUV1C104MBM	16V 0.1U
C753, 754	ECEA1HKS010	50V 1U
C755	ECUV1C104MBM	16V 0.1U
C756, 757	ECUE1H050DCN	50V 5P
C758	ECUV1C224KBM	16V 0.22U
C763	ECUE1E103MBN	25V 0.01U
C764	ECUE1H331KBN	50V 330P
C790	ECA1AKF820E	10V 82U
C811, 812	ECBT1H102KB5	50V 1000P
C813, 814	ECBT1H101KB5	50V 100P
C815, 816	ECEA1HU220	50V 22U
C819, 820	ECBT1H101KB5	50V 100P
C827, 828	ECEA1AU101	10V 100U
		CHIP JUMPER(S)
J701	ERJ6GEY0R00V	1/10W 0
J703-710	ERJ6GEY0R00V	1/10W 0

Ref. No.	Part No.	Part Name & Description	Remarks
		CABINET PARTS LIST	
1	RHD30007	SCREW	
2	RKM0158-K	CABINET	
3	XTBS3+8JFZ1	SCREW	
5	RGK0357-K	ORNAMENT	
6	RGR0115A-C1	REAR PANEL	(E)
6	RGR0115A-D	REAR PANEL	(GC)
7	XTB3+8JFZ	SCREW	
8	XTB3+8FFZ	SCREW	
10	RFKJLCH7	CHASSIS ASS'Y	
10-1	SHG1654	FOOT	
11	RDP0045	ROLLER	
12	RGP0195-K	FRONT CABINET	
13	RGU0549-K	BUTTON, OPEN/CLOSE	
14	RGU0550-K	BUTTON, STOP	
15	RGU0551-K	BUTTON, SKIP	
16	RGU0552-A	BUTTON, EDIT	
17	RMA0479	ANGLE	
18	RMB0192	SPRING	
19	RMR0415-K	CAM	
21	RWJ55201300CC	CABLE	
22	RFKHLCH7A	FRONT PANEL COVER ASS'Y	
22-1	RMG0113	RUBBER	
23	RFKGLCH7E-K	FRONT PANEL ASS'Y	(E)
23	RFKHLCH7B	FRONT PANEL ASS'Y	(GC)
24(E601)	RMN0122	FL HOLDER	

■ CABINET PARTS LOCATION

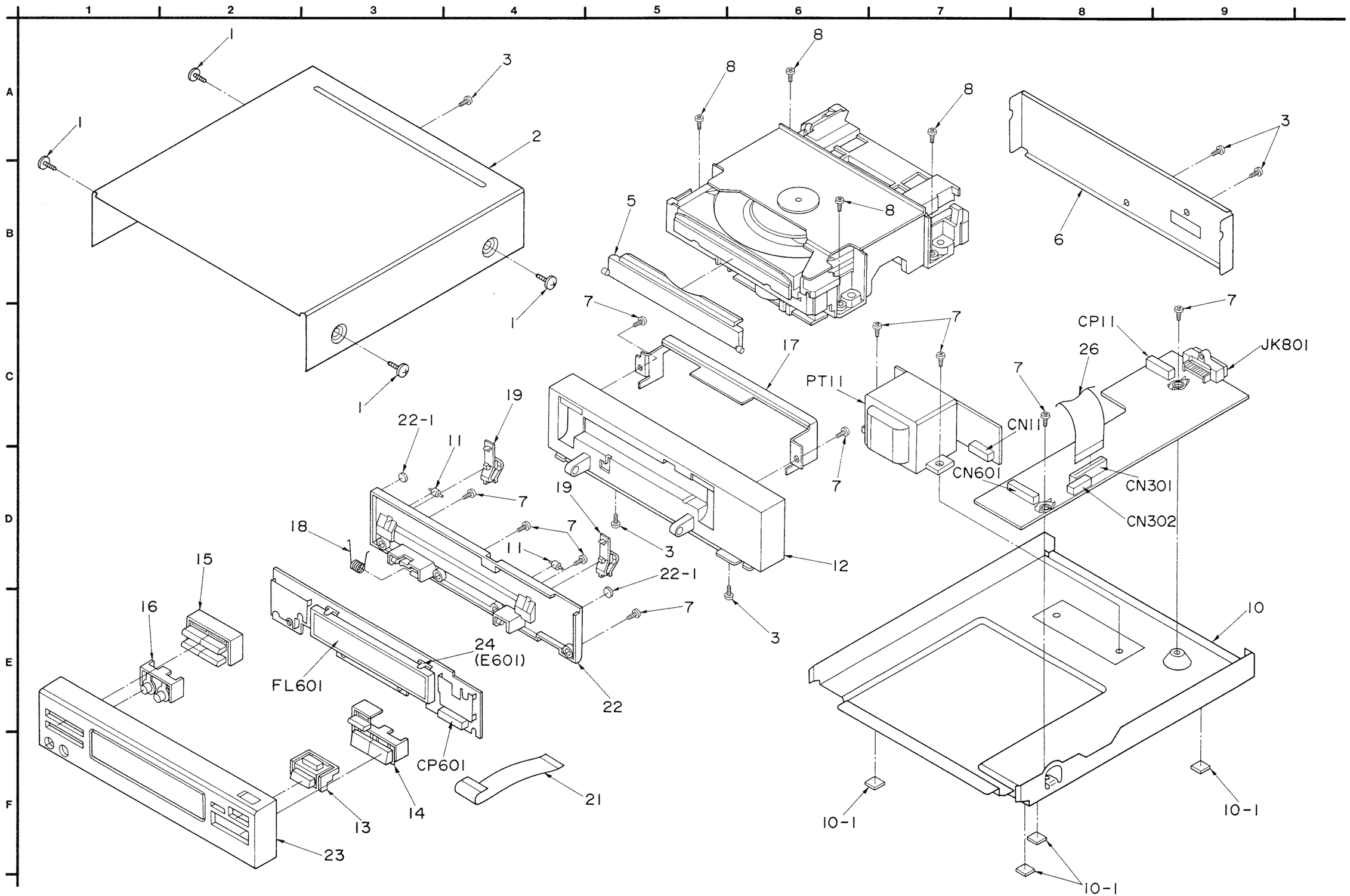

Ref. No.	Part No.	Part Name & Description	Remarks
		LOADING UNIT PARTS	
301	REMD019	MOTOR ASS'Y	
302	RMKD105	CHASSIS	
303	RMEO063	SPRING	
304	RMGO158	BELT	
305	RMLO177	LEVER	
306	RMLO178	LEVER	
307	RMMD058	SLIDE PLATE 1	
308	XTN26+6G	SCREW	
309	XYN2+F6FZ	SCREW	
310	RHD20010	SCREW	
311	RMUO046	GUIDE SHAFT	
312	RHD20009-1	SCREW	
313	RMAO328	HOLDER	
314	RMKD103	DISK TRAY	
315	XTN2+8G	SCREW	
316	XTB3+25GFZ	SCREW	
317	XTN26+6G	SCREW	
318	XTN3+8JFZ	SCREW	
319	RXQO122	TRAY HOLDER	
319-1	RHM2457A	MAGNET	
319-2	RMRO334	HOLDER	
319-3	RXQO123	DISK HOLDER	
320	RFKNXDT77B-H	GEAR ASS'Y	
321	RFKJXDT77-H	CHASSIS ASS'Y	
321-1	RDGO142	GEAR	
321-2	RDGO143	DRIVE GEAR 1	
321-3	RDPO041	PULLEY	
321-4	SDRD14	ROLLER B	
322	RFKNXDT77C-H	HOLDER	
322-1	RMGO159	RUBBER	
323	SODD110Z	TRAVERSE UNIT	
323-1	SHGD112	RUBBER A	
323-2	SHGD113-1	RUBBER B	
323-3	RDVO014	BELT	
324	RMSO123-1	PIN	
325	RMMO059	SLIDE PLATE 2	
326	XTV26+6G	SCREW	
327	RMEO087	SPRING	

■ CABINET PARTS LOCATION (Loading unit parts)

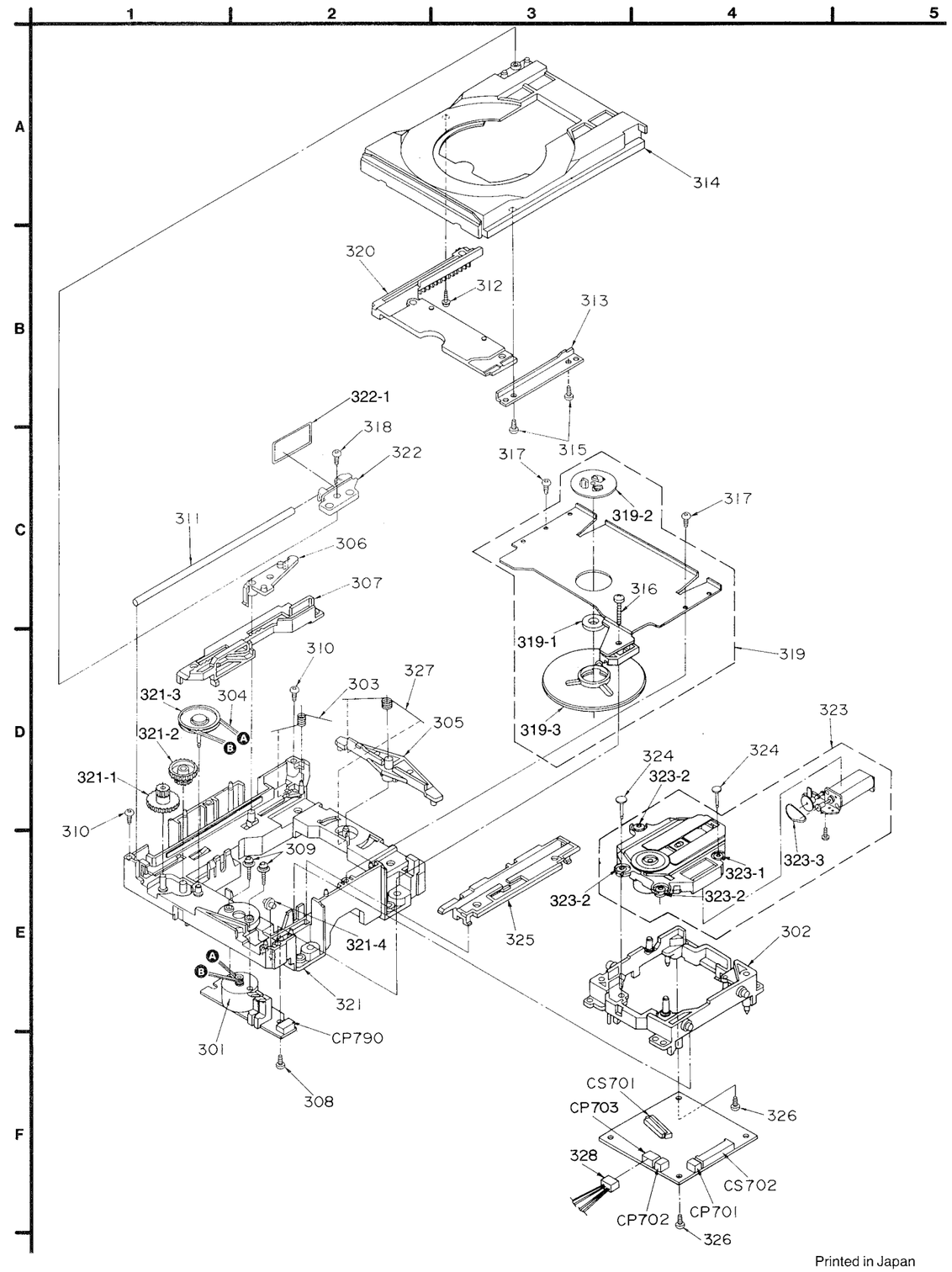

Printed in Japan
F910410300FF/HH/KK/MT

ORDER NO. AD9104083C8

Service Manual

LW/MW/FM Stereo Tuner

Tuner

ST-CH7L

Color

(K)	Black Type

Areas

Country Code	Area	Color
(E)	Continental Europe.	(K)
(GC)	Asia, Latin America, Middle Near East and Africa.	
(GN)	Oceania.	

System: SC-CH7

Because of unique interconnecting cables, when a component requires service, send or bring in the entire system.

■ SPECIFICATIONS

(DIN 45 500)

■ FM TUNER SECTION

Frequency range	87.50~108.00 MHz (0.05 MHz step)
Sensitivity	1.5 μV (IHF, usable)
S/N 30 dB	1.5 μV (75Ω)
S/N 26 dB	1.3 μV (75Ω)
S/N 20 dB	1.2 μV (75Ω)
IHF 46 dB stereo quieting sensitivity	28 μV (75Ω)
Total harmonic distortion	
MONO	0.2%
STEREO	0.3%
S/N	
MONO	60 dB (74 dB, IHF)
STEREO	58 dB (70 dB, IHF)
Frequency response	20 Hz~15 kHz, +0.5 dB~−1.5 dB
Alternate channel selectivity ±400 kHz	50 dB
Stereo separation 1 kHz	40 dB
10 kHz	30 dB
Channel balance (250 Hz~6,300 Hz)	±1.5 dB
Limiting point	1.2 μV
Bandwidth	
IF amplifier	180 kHz
FM demodulator	1000 kHz
Antenna terminal	75Ω (unbalanced)

■ LW/MW TUNER SECTION

Frequency range	
MW	522~1611 kHz (9 kHz-step)
	530~1620 kHz (10 kHz-step)
LW	144~288 kHz (9 kHz-step)
	146~290 kHz (+2 kHz-shift)
Sensitivity (S/N 20 dB)	
MW	20 μV, 300 μV/m
LW	50 μV
Selectivity (±9 kHz)	
MW	(at 999 kHz) 50 dB
LW	(at 216 kHz) 50 dB

■ TIMER SECTION

Clock	Quartz-lock type 24-hour indication
Functions	24-hour programmable; weekly (1 time) once only (1 time) sleep (1~120 min., 1-min. intervals)
Setting intervals	1 minute~23 hours, 59 minutes (at 1 min. intervals)

■ GENERAL

Power consumption	8 W
Dimensions (W×H×D)	215×55×295 mm (8 15/32″×2 5/32″×11 5/8″)
Weight	1.4 kg (3.0 lb.)

Notes:

1. Total harmonic distortion is measured by the digital spectrum analyzer.
2. Specifications are subject to change without notice.
3. Weight and dimensions shown are approximate.

System	Tuner	Amplifier	CD Player	Cassette Deck	Speakers
SC-CH7	ST-CH7L	SU-CH7	SL-CH7	RS-CH7	SB-CH7

Technics/Panasonic

(E) **(GC) (GN)**

■ CONTENTS

Note:
Refer to the service manual for Model No. SU-CH7, Order No. AD9104082C8 for information on ACCESSORIES, INSTALLATION OF THE SYSTEM, CONNECTIONS and PACKAGING.

■ LOCATION OF CONTROLS

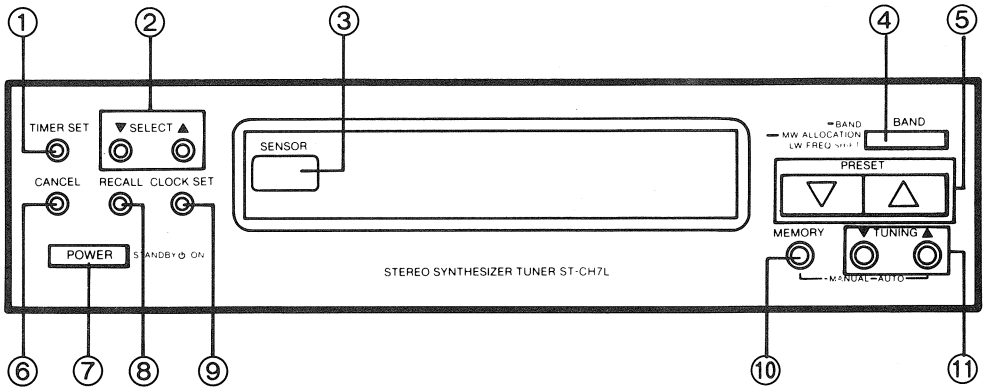

Tuner: control section

① Timer set button (TIMER SET)
This button is used when making the timer setting.

② Timer select buttons (▼ SELECT ▲)
These buttons are used when setting the time. And when making the timer setting, to select the type of timer operation, the day, the time, etc.

③ Remote signal sensor (SENSOR)

④ Band select button (BAND)
This button is used to select either the MW, LW or FM band.

⑤ Preset-tuning buttons (▽ PRESET △)
These buttons are used to select channel numbers for a broadcasting station which has been stored in the tuner's memory.

⑥ Timer cancel button (CANCEL)
This button is used to cancel the timer setting.

⑦ Power "STANDBY ⏻/ON" switch (POWER STANDBY ⏻/ON)
This switch switches ON and OFF the secondary circuit power only. The unit is in the "standby" condition when this switch is set to the STANDBY ⏻ position. Regardless of the switch setting, the primary circuit is always "live" as long as the power cord is connected to an electrical outlet.

⑧ Timer setting confirmation button (RECALL)
This button is used to confirm the timer setting.

⑨ Clock set button (CLOCK SET)
This button is used to set the present time.

⑩ Memory button (MEMORY)
This button is used when presetting broadcast station frequencies into memory.

⑪ Tuning buttons (▼ TUNING ▲)
These buttons are used for tuning the desired broadcast station.

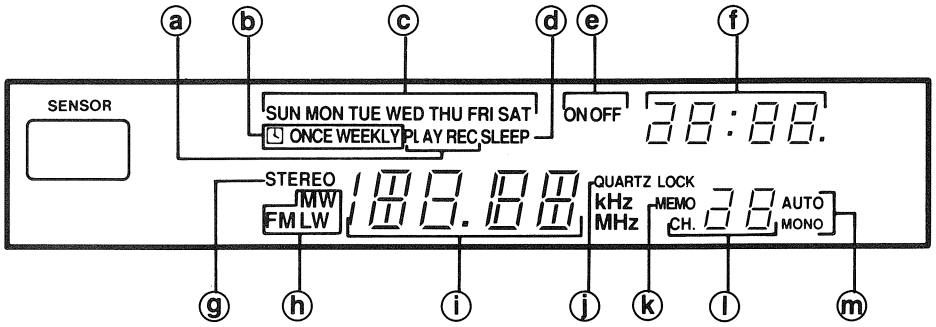

Tuner: display section

ⓐ Timer play/recording indicator (PLAY, REC)
This indicator shows that timer play mode or timer recording mode is activated.

ⓑ Timer mode-indicator (ONCE, WEEKLY)
This indicator shows the timer operation mode (ONCE or WEEKLY).

ⓒ Day display (SUN–SAT)
This display shows the present day, or the day the timer has been set for, if used.

ⓓ Sleep indicator (SLEEP)
Illuminates when the sleep timer is activated.

ⓔ Timer ON/OFF indicator (ON, OFF)
This indicator shows whether the times for timer switch-ON and switch-OFF have been set.

ⓕ Time display
This display shows the present time, or the time the timer has been set for.

ⓖ FM stereo indicator (STEREO)
This indicator automatically illuminates when an FM stereo broadcast is being received. It will not illuminate if the FM mode button is used to select monaural mode.

ⓗ Band indicator (FM, MW, LW)
Illuminates to show which band is selected.

ⓘ Digital frequency display
Displays the broadcast frequencies.

ⓙ Quartz lock indicator (QUARTZ LOCK)
This indicator illuminates when the unit is precisely tuned to a broadcast station.

ⓚ Memory indicator (MEMO)
This indicator illuminates when the memory button is pressed.

ⓛ Preset channel display
This display shows the channel number selected by the preset-tuning buttons.

ⓜ FM mode indicator (AUTO, MONO)
When FM broadcasts are being received, usually the "AUTO" indication is illuminated. When the FM mode is set to monaural, "MONO" illuminates.

■ DISASSEMBLY INSTRUCTIONS

"ATTENTION SERVICER"
Some chassis components may have sharp edges. Be careful when disassembling and servicing.

Ref. No. 1	Removal of the Cabinet
Procedure 1	

●Remove the 5 screws (❶~❺).

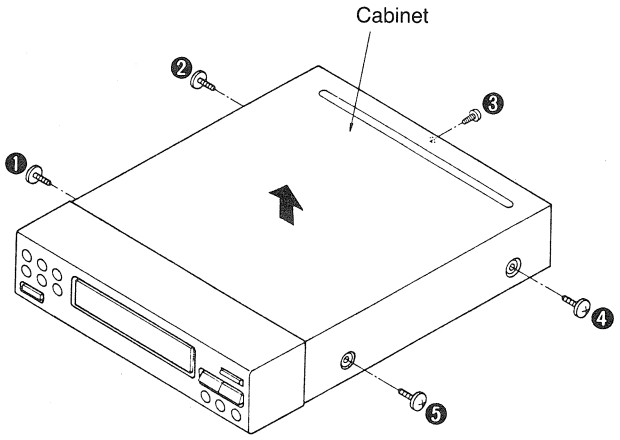

Ref. No. 2	Removal of the Front Panel
Procedure 1→2	

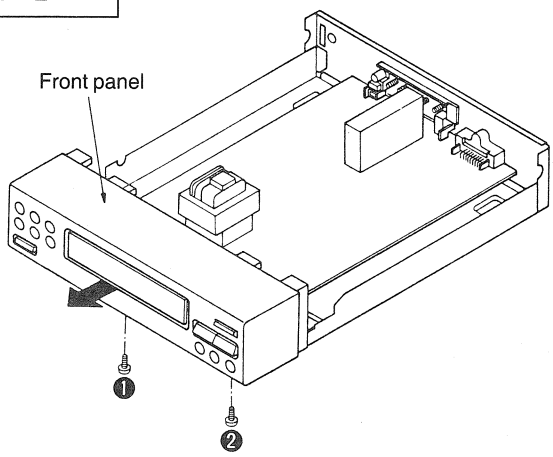

1. Remove the 2 screws (❶, ❷).
2. Remove the front panel in the direction of arrow.

Ref. No. 3	Removal of the Operation P.C.B.
Procedure 1→2→3	

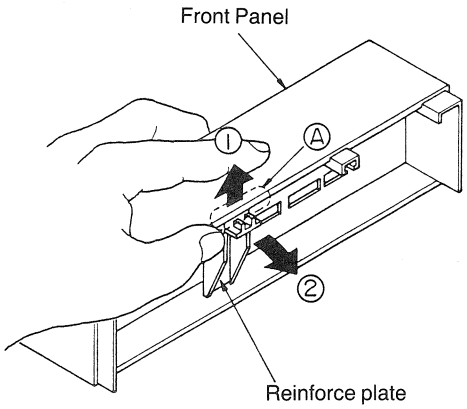

1. Pull up the position Ⓐ of the front panel in the direction of the arrow ①, and then remove the reinforce plate in the direction of the arrow ②.

Ref. No. 4	Removal of the Main P.C.B.
Procedure 1→2→4	

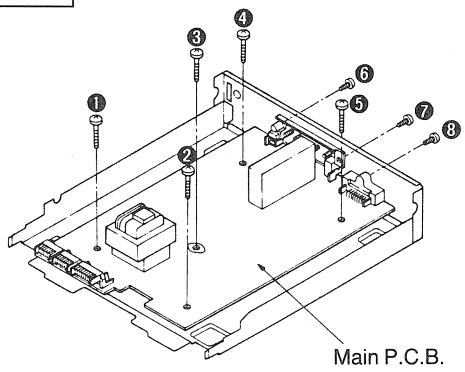

●Remove the 8 screws (❶~❽).

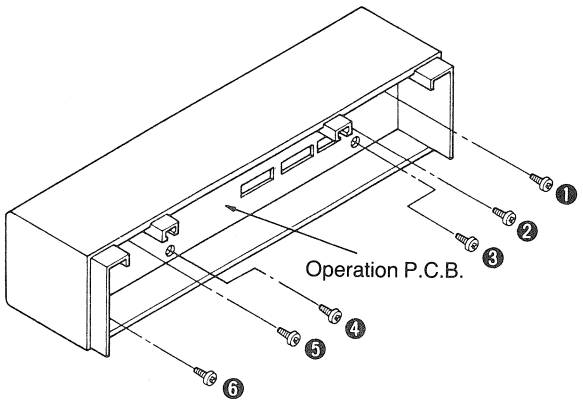

2. Remove the 6 screws (❶~❻).

■ MEASUREMENTS AND ADJUSTMENTS

This TUNER (ST-CH7L) is powered by the amplifier (SU-CH7). To adjust it or check operations as a separate unit, follow the steps below.

1. **Apply a power supply voltage of AC 23 V to TP701 and TP702.**
2. **Power supply switch: ON**

HOW TO CONNECT

Note:
Apply a power supply voltage of AC 23 V to TP701 and TP702 by using a Voltage Controller. If it is not available, use a Power Supply Fixture (SZZA1058C) instead.

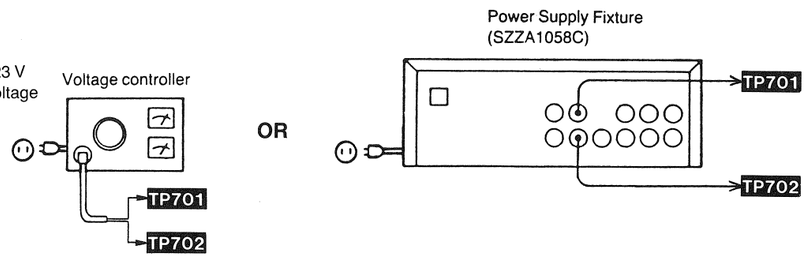

•ADJUSTMENT POINT

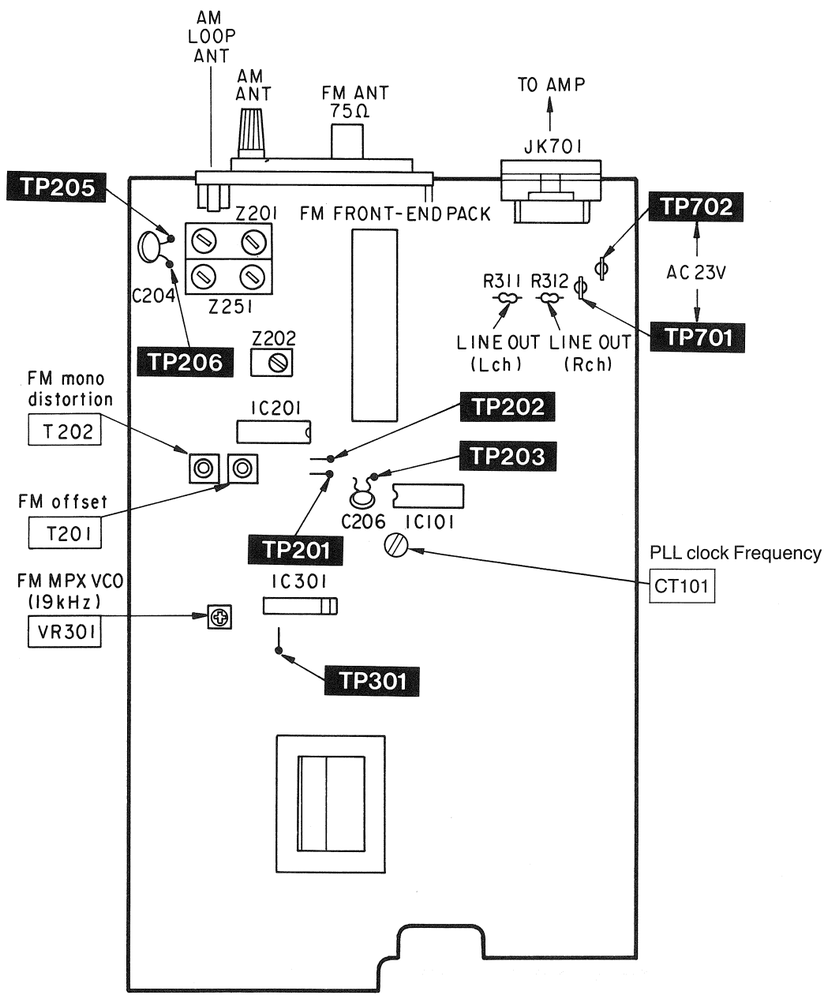

•FM ADJUSTMENT

Control positions and equipment used
- •FM signal generator (FM-SG)
- •Stereo modulator
- •Distortion analyser
- •DC electronic voltmeter (EVM)
- •Frequency counter
- •Choke coil (100 μH)
- •Resistor (100 kΩ)

Note: For Z201 (AM ANT and OSC coil), Z202 (AM-IFT), they are supplied as adjusted parts. So, do not turn the cores of the parts. If is not necessary to adjust the AM circuit.

FM OFFSET VOLTAGE AND MONO DISTORTION ADJUSTMENT

1. Test equipment connection is shown in figure.
2. Set the unit to **"FM"** mode.
3. Set the radio frequency display and signal generator to **100.10 MHz**.
4. Adjust the core of **T201** so that the voltage measured in signal mode is **0 mV (0±20 mV)** in 300 mV range.
5. Adjust **T202** so that the distortion factor of L-CH and R-CH is minimized.
6. Repeat steps 4 and 5.

Note: The adjusting screwdriver used should be made of resin.

FM SIGNAL GENERATOR CONDITION
Modulation 100%
Modulation frequency..... 1 kHz
Output level ..... 66 dB

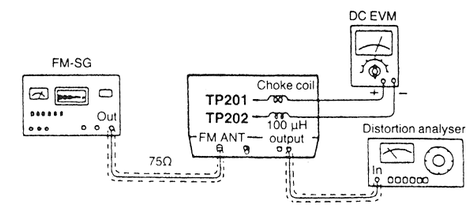

FM MPX VCO ADJUSTMENT

1. Test equipment connection is shown in figure.
2. Set the unit to **"stereo"** position.
3. Set the radio frequency display and signal generator to **100.10 MHz**.
4. Adjust **VR501** for **19 kHz±30 Hz** on frequency counter reading.

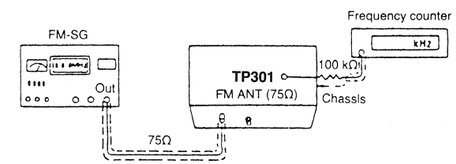

USING ALTERNATE SYSTEM
1. Receive the stereo broadcast.
2. Adjust **VR301** until stereo indicator lights up. Fix the arm of **VR301** as shown in gifure.

FM SIGNAL GENERATOR CONDITION
Modulation 100%
Modulation frequency .... 0 kHz
Output level ..... 66 dB

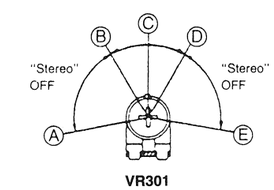

Ⓐ–Ⓑ, Ⓓ–Ⓔ .... "Stereo" OFF position
Ⓑ–Ⓓ .... "Stereo" ON position (Indicator lighting)
Ⓒ ..... Adjust point of pilot circuit

PLL CLOCK FREQUENCY ADJUSTMENT

1. Test equipment connection is shown in figure.
2. Adjust **CT101** for **2070±0.010 kHz (2050±0.010 kHz...GC only)** on frequency counter reading.

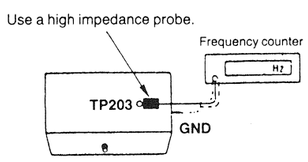

■ DESCRIPTION OF FL PANEL [FL901 (RSL0096-F)]

●GRID ASSIGNMENT

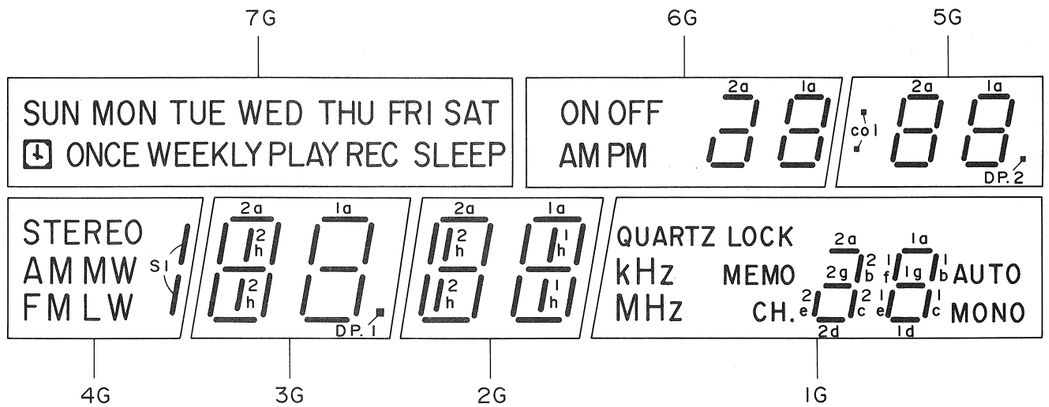

●PIN CONNECTION

PIN NO.	31	30	29	28	27	26	25	24	23	22	21	20	19	18	17	16	15	14	13	12	11	10	9	8	7	6	5	4	3	2	1
CONNECTION	F2	F2	NP	P7	P15	P14	P13	P12	P11	P10	P9	P8	P0	P1	P2	P3	P4	P5	P6	P16	NC	1G	2G	3G	4G	5G	6G	7G	NP	F1	F1

Note: 1) F1, F2 ..... Filament
2) NP ..... No pin
3) 1G~8G ..... Grid

●ANODE CONNECTION

	7G	6G	5G	4G	3G	2G	1G
P0	SLEEP	AM	2d	LW	2d	2d	CH.
P1	—	PM	2e	FM	2e	2e	MHz
P2	WEEKLY	2c	2c	AM	2c	2c	kHz
P3	—	—	2g	MW	2g	2g	2a, 2d, 2e, 2g
P4	ONCE	—	2f	—	2f	2f	MEMO
P5	—	2b	2b	—	2b	2b	AUTO
P6	⊡	2a, 2d, 2e, 2g	2a	STEREO	2a	2a	QUARTZ LOCK
P7	PLAY	ON	col	S1	2h	2h	2b
P8	WED	1d	1d	—	1d	1d	1d
P9	SAT	1e	1e	—	1e	1e	1e
P10	TUE	1c	1c	—	1c	1c	1c
P11	FRI	1g	1g	—	1g	1g	1g
P12	MON	1f	1f	—	1f	1f	1f
P13	THU	1b	1b	—	1b	1b	1b
P14	SUN	1a	1a	—	1a	1a	1a
P15	REC	OFF	DP, 2	—	DP, 1	1h	2c
P16	—	—	—	—	—	—	MONO

■ FUNCTIONS OF IC TERMINALS

●IC901 (MN187125STT1)

Pin No.	Mark	I/O Division	Function
1	VDD	I	Power supply (+B)
2	OSC2	I	Connected to crystal oscillator (X901) (4.19 MHz)
3	OSC1	O	
4	VSS	I	Connected to ground terminal
5	X1	I	Connected to ground terminal
6	X0	O	Not connected
7	KEY2	I	Key scan signal input
8	KEY1 BIN	I	Connect to ground terminal
9	CR	I	Not connected
10	$\overline{\text{STEREO}}$	I	Stereo input Inputs when stereo signal receipt "L", monaural signal receipt "H".
11	DIR	I	When broadcasting receipt "L", stereo/normal broadcasting receipt "H". Not connected
12	MONO	O	Auto/mono change over terminal.
13 14	$\overline{\text{MFRO}}$	O	Remote control signal terminal. Not connected
15	INT	I	Remote control input
16	POWER DOWN	I	Power supply level detection
17	$\overline{\text{SDC}}$	O	DTS selective output terminal. Not connected
18	$\overline{\text{BM}}$		
19	POWER	O	AC output Put out for "H" when moving. For cutting relay dirive of main power supply. Becomes "H" when PLL is moving. Reverse when put the power key.
20	TB	I	Band data input
21	RESET	I	Reset signal input Input of reset for micro computer stand

Pin No.	Mark	I/O Division	Function
22	SBT1	O	Clock terminal for serial data.
23	CE	O	Serial transmission operation Chip enable terminal
24	SBO1	O	Serial data signal output
25	CLOCK OUT	O	External control clock signal input-output
26	CLOCK IN	I	
27	DATA OUT	O	External control data signal output
28	NC	—	Not connected
29	CM	I	Connectd to ground terminal
30	DATA IN	I	External control data signal input
31	SD	I	Input for stop signal during auto tuning. Stops auto tuning at high level. Receipt: H, No signal: L
32	MUT	O	Output for erasing shock noise when lock-off at PLL. <Muting outut> 1. Power switch "off". 2. Frequency change (up/down, FM⟷AM⟷TV) Put out "H" when those of above two.
33	A IN	I	Not connected
34	B IN		
35 ~ 37	KS1 ~ KS3	O	Key scan signal output
38 ~ 45	DGT0 ~ DGT7	O	Digit signal output to FL display
46	P71	I	Serial data signal input
47 • 48 ~ 63	P70 • SEG15 ~ SEG0	O	Segment signal output to FL display
64	VPP	I	FL motor power supply

■ SCHEMATIC DIAGRAM (Parts list on pages 17~20.)

Notes:

- ●S901, 902 : Preset channel switch. (S901: Up, S902: Down)
- ●S903 : Band select switch.
- ●S904 : Memory switch.
- ●S905, 906 : Tuning switch. (S905: Up, S906: Down)
- ●S907, 908 : Timer select Switch. (S907: Up, S908: Down)
- ●S909 : Timer set switch.
- ●S910 : Clock set switch.
- ●S911 : Timer setting confirmatin switch.
- ●S912 : Timer cancel switch.
- ●S913 : Power switch.

●Indicated voltage values are the standard values for the unit measured by the DC electronic circuit tester (high-impedance) with the chassis taken as standard. Therefore, there may exist some errors in the voltage values, depending on the internal impedance of the DC circuit tester.
( ): MW voltage, [ ]: LW voltage, ▭: MUTING voltage

●Important safety notice
Components identified by ⚠ mark have special characteristics important for safety. When replacing any of these components, use only manufacturer's specified parts.

●This schematic diagram may be modified at any time with the development of new technology.

- Positive voltage lines
- Negative voltage lines
- FM OSC
- FM signal
- AM OSC
- AM signal
- AF signal lines

・Caution!
IC and LSI are sensitive to static electricity.
Secondary trouble can be prevented by taking care during repair.
- Cover the parts boxes made of plastics with aluminum coil.
- Ground the soldering iron.
- Put a conductive mat on the work table.
- Do not touch the legs of IC or LSI with the fingers directly.

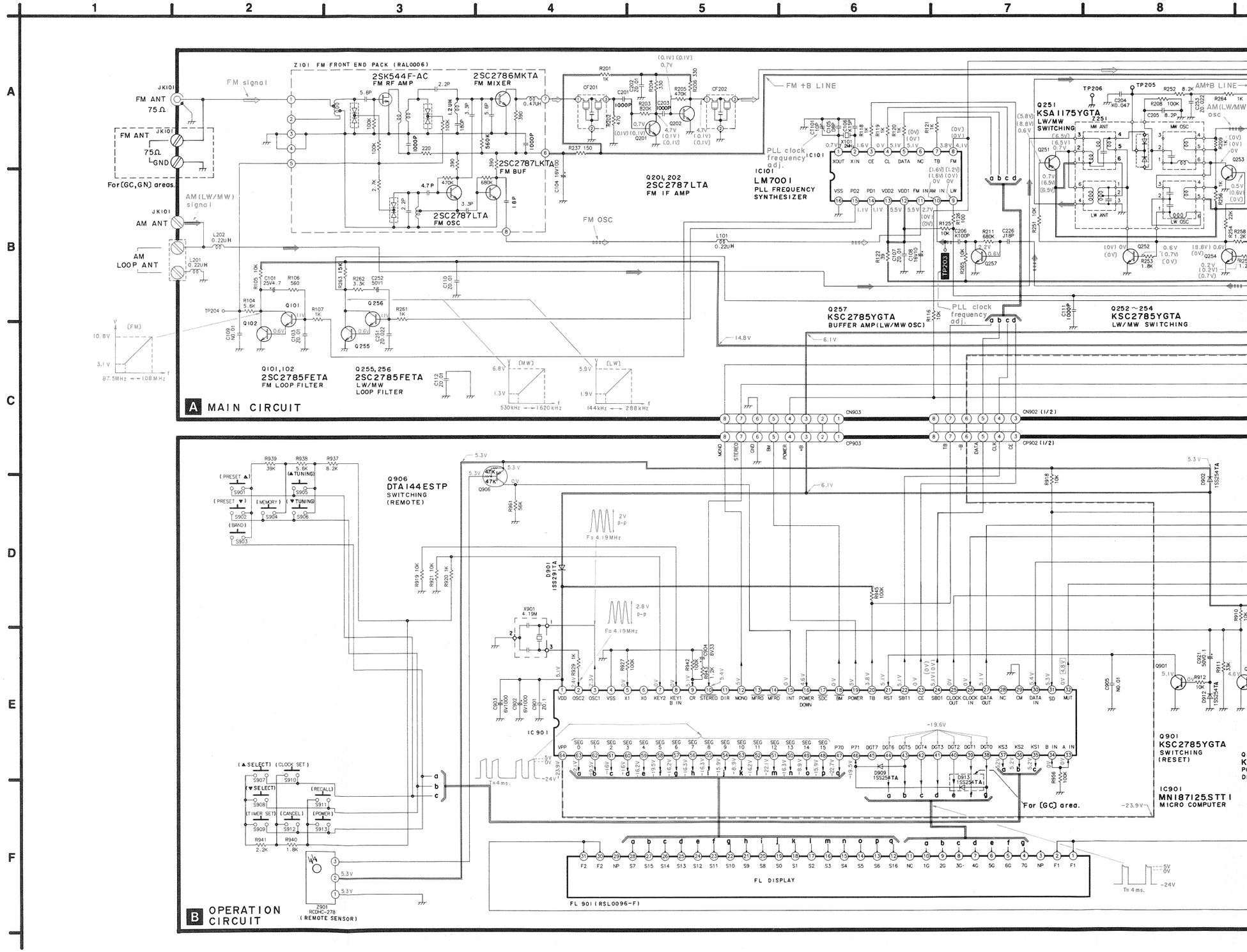

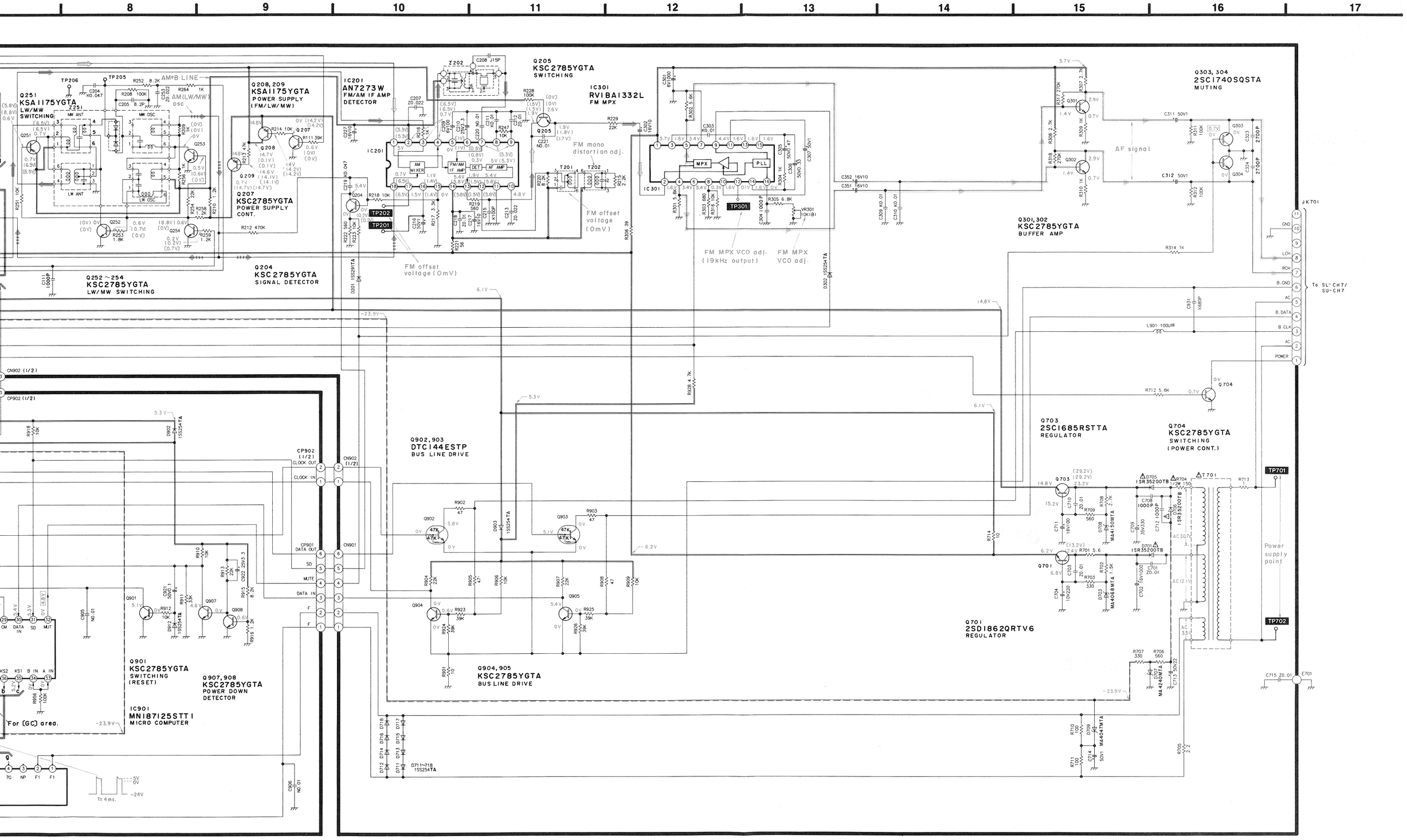
8
9
10
11
12
13
14
15
16
17
Q251
KSA1175YGTA
LW/MW SWITCHING
Q252~254
KSC2785YGTA
LW/MW SWITCHING
Q208, 209
KSA1175YGTA
POWER SUPPLY (FM/LW/MW)
Q207
KSC2785YGTA
POWER SUPPLY CONT.
Q204
KSC2785YGTA
SIGNAL DETECTOR
IC201
AN7273W
FM/AM IF AMP DETECTOR
Q205
KSC2785YGTA
SWITCHING
IC301
RVIBA1332L
FM MPX
FM mono distortion adj.
FM offset voltage (OmV)
FM MPX VCO adj. (19kHz output)
FM MPX VCO adj.
Q303, 304
2SC1740SQSTA
MUTING
AF signal
Q301, 302
KSC2785YGTA
BUFFER AMP
JK701
To SL-CH7/ SU-CH7
Q902, 903
DTC144ESTP
BUS LINE DRIVE
Q904, 905
KSC2785YGTA
BUS LINE DRIVE
Q901
KSC2785YGTA
SWITCHING (RESET)
Q907, 908
KSC2785YGTA
POWER DOWN DETECTOR
IC901
MN187125STT1
MICRO COMPUTER
For (GC) area.
Q703
2SC1685RSTTA
REGULATOR
Q704
KSC2785YGTA
SWITCHING (POWER CONT.)
Q701
2SD1862QRTV6
REGULATOR
Power supply point
TP701
TP702
E701

■ PRINTED CIRCUIT BOARDS AND WIRING CONNECTION DIAGRAM

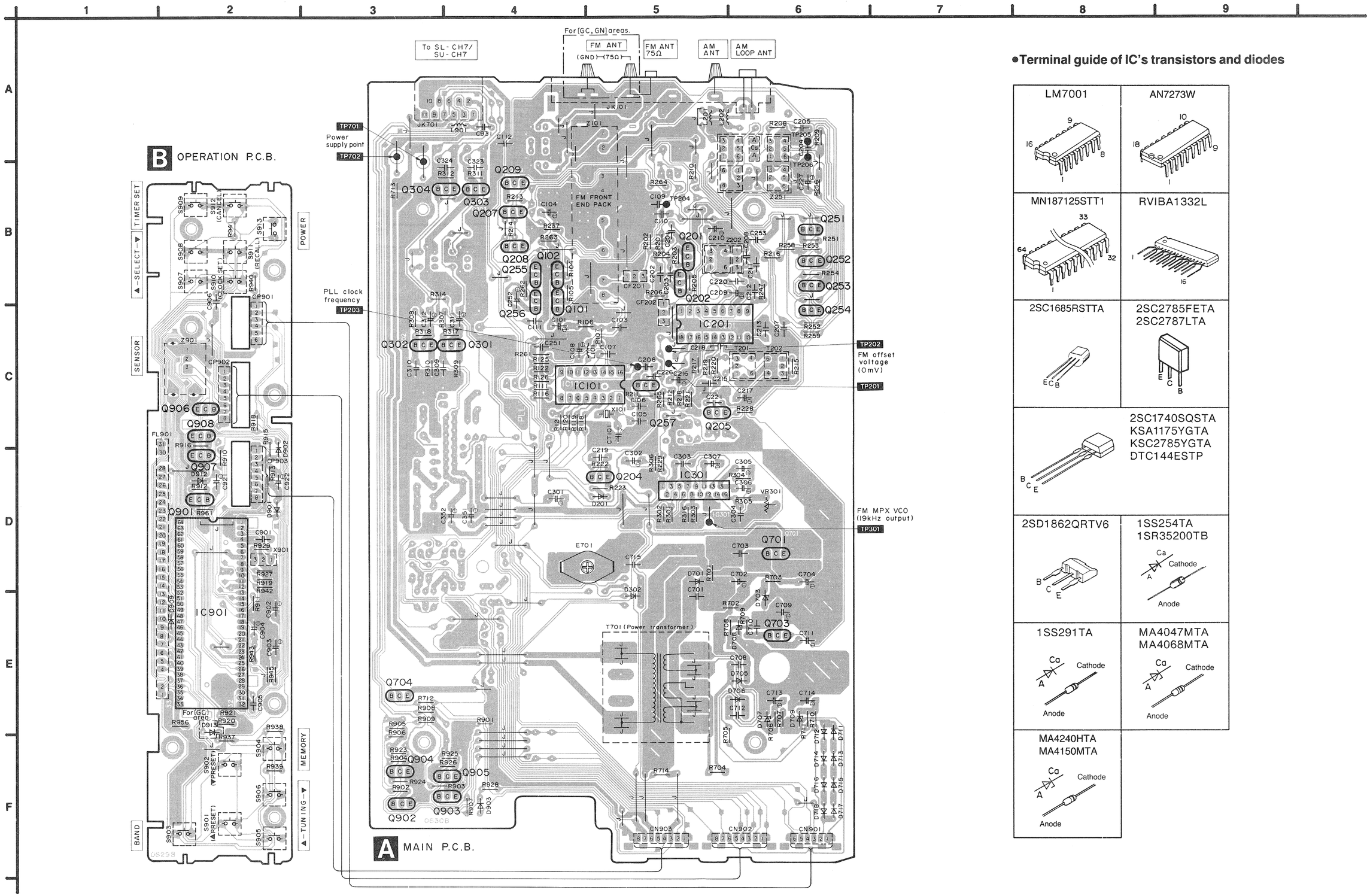

●Terminal guide of IC's transistors and diodes

LM7001	AN7273W
MN187125STT1	RVIBA1332L
2SC1685RSTTA	2SC2785FETA 2SC2787LTA
2SC1740SQSTA KSA1175YGTA KSC2785YGTA DTC144ESTP	
2SD1862QRTV6	1SS254TA 1SR35200TB
1SS291TA	MA4047MTA MA4068MTA
MA4240HTA MA4150MTA	

■ BLOCK DIAGRAM

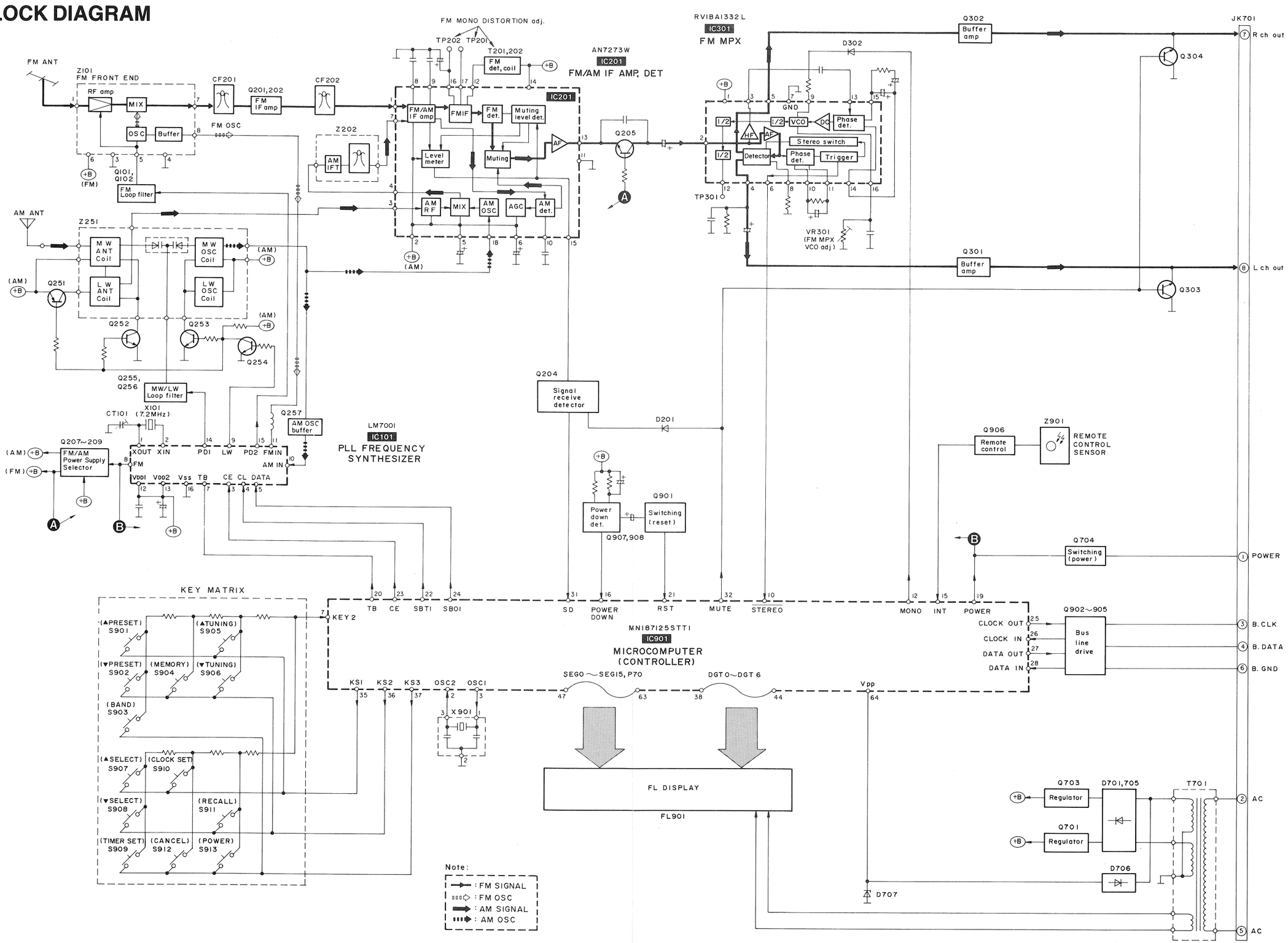

■ REPLACEMENT PARTS LIST

Notes : * Important safety notice:
Components identified by ⚠ mark have special characteristics important for safety. When replacing any of these components use only manufacturer's specified parts.
* The parenthesized indications in the Remarks columns specify the areas. (Refer to the cover page for area.)
Parts without these indications can be used for all areas.

Ref. No.	Part No.	Part Name & Description	Remarks
		INTEGRATED CIRCUIT(S)	
IC101	LM7001	I. C, PLL FREQENCY	
IC201	AN7273W	I. C, FM/AM IF AMP. DET	
IC301	RVIBA1332L	I. C, FM MPX	
IC901	MN187125STT1	I. C, MICRO COMPUTER	
		TRANSISTOR(S)	
Q101, 102	2SC2785FE	TRANSISTOR	
Q201, 202	2SC2787L	TRANSISTOR	
Q204, 205	KSC2785YGTA	TRANSISTOR	
Q207	KSC2785YGTA	TRANSISTOR	
Q208, 209	KSA1175YGTA	TRANSISTOR	
Q251	KSA1175YGTA	TRANSISTOR	
Q252-254	KSC2785YGTA	TRANSISTOR	
Q255, 256	2SC2785FE	TRANSISTOR	
Q257	KSC2785YGTA	TRANSISTOR	
Q301, 302	KSC2785YGTA	TRANSISTOR	
Q303, 304	2SC1740SQ	TRANSISTOR	
Q701	2SD1862QRTV6	TRANSISTOR	
Q703	2SC1685RSTTA	TRANSISTOR	
Q704	KSC2785YGTA	TRANSISTOR	
Q901	KSC2785YGTA	TRANSISTOR	
Q902, 903	DTC144EKT96	TRANSISTOR	
Q904, 905	KSC2785YGTA	TRANSISTOR	
Q906	DTA144ESTP	TRANSISTOR	
Q907, 908	KSC2785YGTA	TRANSISTOR	
		DIODE(S)	
D201	1SS291TA	DIODE	
D302	1SS254TA	DIODE	
D701	1SR35200TB	DIODE	⚠
D703	MA4068M	DIODE	
D705, 706	1SR35200TB	DIODE	⚠
D707	MA4240H	DIODE	
D708	MA4150M	DIODE	
D709	MA4047MTA	DIODE	
D711-718	1SS254TA	DIODE	
D901	1SS291TA	DIODE	
D902, 903	1SS254TA	DIODE	
D909	1SS254TA	DIODE	
D912	1SS254TA	DIODE	
D913	1SS254TA	DIODE	(GC)

Ref. No.	Part No.	Part Name & Description	Remarks
		VARIABLE RESISTOR(S)	
VR301	EVNDXAA00B14	V. R, FM MPX VCO ADJ.	
		COMPONENT COMBINATION(S)	
Z101	RAL0006	COMPONENT COMBINATION	
Z202	RLI2Z003M-T	COMPONENT COMBINATION	
Z251	RLA6Z002M-T	COMPONENT COMBINATION	
Z901	RCDHC-278	REMOTE SENSOR	
		COIL(S)	
L101	ELEXTR22MA9	COIL	
L201, 202	ELESNR22MA	COIL	
L901	ELEXT101KA9	COIL	
		TRANSFORMER(S)	
T201	RLI4B002M-Z	TRANSFORMER	
T202	RLI4B003M-Z	TRANSFORMER	
T701	RFKCTCH7N-K	POWER TRANSFORMER	⚠
		FILTER(S)	
CF201, 202	RLFFETWNA01L	CERAMIC FILTER	
		OSCILLATOR(S)	
X101	SVQ49U722-S	OSCILLATOR	
X901	EF0GC4194T4	OSCILLATOR	
		DISPLAY	
FL901	RSL0096-F	DISPLAY	
		SWITCH(ES)	
S901	EVQ21405R	SW, PRESET UP	
S902	EVQ21405R	SW, PRESET DOWN	
S903	EVQ21405R	SW, BAND	
S904	EVQ21405R	SW, MEMORY	
S905	EVQ21405R	SW, TUNING UP	
S906	EVQ21405R	SW, TUNING DOWN	
S907	EVQ21405R	SW, SELECT UP	
S908	EVQ21405R	SW, SELECT DOWN	
S909	EVQ21405R	SW, TIMER SET	

Ref. No.	Part No.	Part Name & Description	Remarks
S910	EVQ21405R	SW, CLOCK SET	
S911	EVQ21405R	SW, RECALL	
S912	EVQ21405R	SW, CANSEL	
S913	EVQ21405R	SW, POWER	
		CONNECTOR(S)	
CN901	RJU003K006M1	SOCKET(6P)	
CN902, 903	RJU003K008M1	SOCKET(8P)	
CP901	RJT003K006M1	CONNECTOR(6P)	
CP902, 903	RJT003K008M1	CONNECTOR(8P)	
		VARIABLE CAPACITOR	
CT101	RCV10AF1T-S	TRIMMER CAPACITOR	
		JACK(S)	
JK101	RJH4202M	ANT. TERMINAL BOARD	(E)
JK101	RJH4405-1M	ANT. TERMINAL BOARD	(GC, GN)
JK701	RJT055K011-1	CONTROL TERMINAL	

Notes : * Capacity valuse are in microfarads (uF) unless specified otherwise, P=Pico-farads(pF) F=Farads(F)
* Resistance values are in ohms, unless specified otherwise, 1K=1,000(OHM) , 1M=1,000k(OHM)

Ref. No.	Part No.	Values & Remarks
		RESISTORS
R104	ERDS2TJ562	1/4W 5.6K
R105	ERDS2TJ103	1/4W 10K
R106	ERDS2TJ561	1/4W 560
R107	ERDS2TJ102	1/4W 1K
R111	ERDS2TJ393	1/4W 39K
R116	ERDS2TJ103	1/4W 10K
R118-121	ERDS2TJ102	1/4W 1K
R122	ERDS2TJ390	1/4W 39
R125	ERDS2TJ103	1/4W 10K
R126	ERDS2TJ101	1/4W 100
R201	ERDS2TJ102	1/4W 1K
R202	ERDS2TJ471	1/4W 470
R203	ERDS2TJ824	1/4W 820K
R204	ERDS2TJ331	1/4W 330
R205	ERDS2TJ474	1/4W 470K
R206	ERDS2TJ331	1/4W 330
R208	ERDS2TJ104	1/4W 100K
R209	ERDS2TJ102	1/4W 1K
R210	ERDS2TJ122	1/4W 1.2K
R211	ERDS2TJ684	1/4W 680K
R212	ERDS2TJ474	1/4W 470K
R213	ERDS2TJ473	1/4W 47K
R214	ERDS2TJ103	1/4W 10K
R215	ERDS2TJ222	1/4W 2.2K
R216	ERDS2TJ102	1/4W 1K
R217	ERDS2TJ332	1/4W 3.3K
R218	ERDS2TJ103	1/4W 10K
R219	ERDS2TJ561	1/4W 560
R220	ERDS2TJ822	1/4W 8.2K
R221	ERDS2TJ560T	1/4W 56
R222	ERDS2TJ561	1/4W 560
R223	ERDS2TJ103	1/4W 10K
R228	ERDS2TJ104	1/4W 100K
R229	ERDS2TJ223	1/4W 22K
R237	ERDS2TJ151	1/4W 150
R247	ERDS2TJ103	1/4W 10K
R251	ERDS2TJ103	1/4W 10K
R252	ERDS2TJ822	1/4W 8.2K
R253	ERDS2TJ182	1/4W 1.8K
R254	ERDS2TJ223	1/4W 22K
R256	ERDS2TJ102	1/4W 1K
R258, 259	ERDS2TJ122	1/4W 1.2K
R261	ERDS2TJ102	1/4W 1K
R262	ERDS2TJ332	1/4W 3.3K
R263	ERDS2TJ153	1/4W 15K
R264	ERDS2TJ102	1/4W 1K

Ref. No.	Part No.	Values & Remarks
R265	ERDS2TJ103	1/4W 10K
R301, 302	ERDS2TJ562	1/4W 5.6K
R303	ERDS2TJ681	1/4W 680
R304	ERDS2TJ102	1/4W 1K
R305	ERDS2TJ682T	1/4W 6.8K
R306	ERDS2TJ390	1/4W 39
R307, 308	ERDS2TJ272T	1/4W 2.7K
R309, 310	ERDS2TJ102	1/4W 1K
R311, 312	ERDS2TJ104	1/4W 100K
R314	ERDS2TJ102	1/4W 1K
R316	ERDS2TJ103	1/4W 10K
R317, 318	ERDS2TJ274	1/4W 270K
R701	ERDS2TJ5R6	1/4W 5.6
R702	ERDS2TJ152	1/4W 1.5K
R703	ERDS2TJ331	1/4W 330
R704	ERDS1FVJ151T	1/2W 150 ⚠
R705	ERDS2TJ2R2T	1/4W 2.2
R706	ERDS2TJ561	1/4W 560
R707	ERDS2TJ331	1/4W 330
R708	ERDS2TJ272T	1/4W 2.7K
R709	ERDS2TJ561	1/4W 560
R710, 711	ERDS2TJ101	1/4W 100
R712	ERDS2TJ562	1/4W 5.6K
R713	ERDS2TJ1R0	1/4W 1.0
R714	ERDS2TJ100	1/4W 10
R901	ERDS2TJ100	1/4W 10
R902, 903	ERDS2TJ470	1/4W 47
R904	ERDS2TJ223	1/4W 22K
R905	ERDS2TJ470	1/4W 47
R906	ERDS2TJ103	1/4W 10K
R907	ERDS2TJ223	1/4W 22K
R908	ERDS2TJ470	1/4W 47
R909, 910	ERDS2TJ103	1/4W 10K
R911	ERDS2TJ333	1/4W 33K
R912	ERDS2TJ103	1/4W 10K
R913	ERDS2TJ223	1/4W 22K
R915	ERDS2TJ822	1/4W 8.2K
R916	ERDS2TJ122	1/4W 1.2K
R918, 919	ERDS2TJ103	1/4W 10K
R920	ERDS2TJ102	1/4W 1K
R921	ERDS2TJ103	1/4W 10K
R923-926	ERDS2TJ393	1/4W 39K
R927	ERDS2TJ104	1/4W 100K
R928	ERDS2TJ472	1/4W 4.7K
R929	ERDS2TJ102	1/4W 1K
R937	ERDS2TJ822	1/4W 8.2K
R938	ERDS2TJ562	1/4W 5.6K
R939	ERDS2TJ393	1/4W 39K
R940	ERDS2TJ182	1/4W 1.8K

Ref. No.	Part No.	Values & Remarks
R941	ERDS2TJ222	1/4W 2.2K
R942	ERDS2TJ104	1/4W 100K
R943	ERDS2TJ122	1/4W 1.2K
R945	ERDS2TJ104	1/4W 100K
R956	ERDS2TJ104	1/4W 100K
R961	ERDS2TJ563	1/4W 56K
		CAPACITORS
C101	ECEA1EK4R7	25V 4.7U
C103	ECKR1H103ZF5	50V 0.01U
C104	ECEA1CU101	16V 100U
C105	ECCR1H080DC5	50V 8P
C106	ECCR1H150KC5	50V 15P
C107	ECKR1H103ZF5	50V 0.01U
C108	ECEA1CK100B	16V 10U
C109	ECBT1C103NS5	16V 0.01U
C110	ECKR1H103ZF5	50V 0.01U
C111	ECBT1H102KB5	50V 1000P
C112	ECKR1H103ZF5	50V 0.01U
C201	ECBT1H102KB5	50V 1000P
C202	ECKR1H103ZF5	50V 0.01U
C203	ECBT1H102KB5	50V 1000P
C204	ECFR1E473KR	25V 0.047U
C205	ECBT1H8R2KC5	50V 8.2P
C206	ECCR1H101K5	50V 100P
C207	ECKT1H223ZF	50V 0.022U
C208	ECBT1H150JC5	50V 15P
C209	ECEA0JU101B	6.3V 100U
C210	ECEA1EK3R3B	25V 3.3U
C211	ECFR1E103KR	25V 0.01U
C212	ECKR1H103ZF5	50V 0.01U
C213	ECKT1H223ZF	50V 0.022U
C215	ECCR1H101K5	50V 100P
C216	ECEA1HK010B	50V 1U
C217	ECEA1CK100B	16V 10U
C218	ECKR1H103ZF5	50V 0.01U
C219	ECFR1E473KR	25V 0.047U
C220, 221	ECBT1C103NS5	16V 0.01U
C226	ECBT1H180JC5	50V 18P
C227	ECEA1CK100B	16V 10U
C251	ECBT1E223ZF	25V 0.022U
C252	ECEA1HK010B	50V 1U
C253	ECBT1E223ZF	25V 0.022U
C301	ECEA0JU102	6.3V 1000U
C302	ECEA1CK100B	16V 10U
C303	ECFR1E103KR	25V 0.01U
C304	ECQG1H102KZT	50V 1000P
C305	ECEA1HKR47	50V 0.47U

Ref. No.	Part No.	Values & Remarks
C306	ECEA1HKR33	50V 0.33U
C307	ECEA1HK010B	50V 1U
C309, 310	ECFR1E103KR	25V 0.01U
C311, 312	ECEA1HK010B	50V 1U
C323, 324	ECFR1E272KR	25V 2700P
C351, 352	ECEA1CK100B	16V 10U
C701	ECKR1H103ZF5	50V 0.01U
C702	ECEA1CU102B	16V 1000U
C703	ECKR1H103ZF5	50V 0.01U
C704	ECEA1AU221	10V 220U
C708	ECKR2H102ZF5	500V 1000P
C709	ECEA1VU331B	35V 330U
C710	ECKR1H103ZF5	50V 0.01U
C711	ECEA1CU101	16V 100U
C712	ECKR2H102ZF5	500V 1000P
C713	ECEA1HU220	50V 22U
C714	ECEA1HK010B	50V 1U
C715	ECKR1H103ZF5	50V 0.01U
C901	ECFR1H104ZF	50V 0.1U
C902, 903	ECEA0JU102	6.3V 1000U
C904	ECEA0JK330	6.3V 33U
C905, 906	ECBT1C103NS5	16V 0.01U
C921	ECEA1HK0R1	50V 0.1U
C922	ECEA1EK3R3B	25V 3.3U
C931	ECBA1H681KB5	50V 680P

Ref. No.	Part No.	Part Name & Description	Remarks
		CABINET PARTS	
1	RHD30007	SCREW	
2	RKM0158-K	CABINET	
3	RGR0116A-C	REAR PANEL	(E)
3	RGR0116A-D1	REAR PANEL	(GC, GN)
4	RMR0427	HOLDER	
5	SHE170-2	SPACER	
6	XTBS26+8J	SCREW	
7	XTBS3+8JFZ1	SCREW	
8	XTB3+12JFZ	SCREW	

Ref. No.	Part No.	Part Name & Description	Remarks
9	RFKJTCH7LE-K	CASSIS ASS'Y	
9-1	SHG1654	FOOT	
10	RGU0553-K	BUTTON, PRESET	
11	RGU0554-K	BUTTON, TUNING	
12	RGU0555-A	BUTTON, TIMER	
13	RGU0556-K	BUTTON, POWER	
14	RGU0557-K	BUTTON, BAND SELECT	
15	RFKGTCH7LE-K	FRONT PANEL ASS'Y	(E)
15	RFKGTCH7LGCK	FRONT PANEL ASS'Y	(GC, GN)
16	RMN0123	FL HOLDER	
17	XTB3+8JFZ	SCREW	

■ CABINET PARTS LOCATION

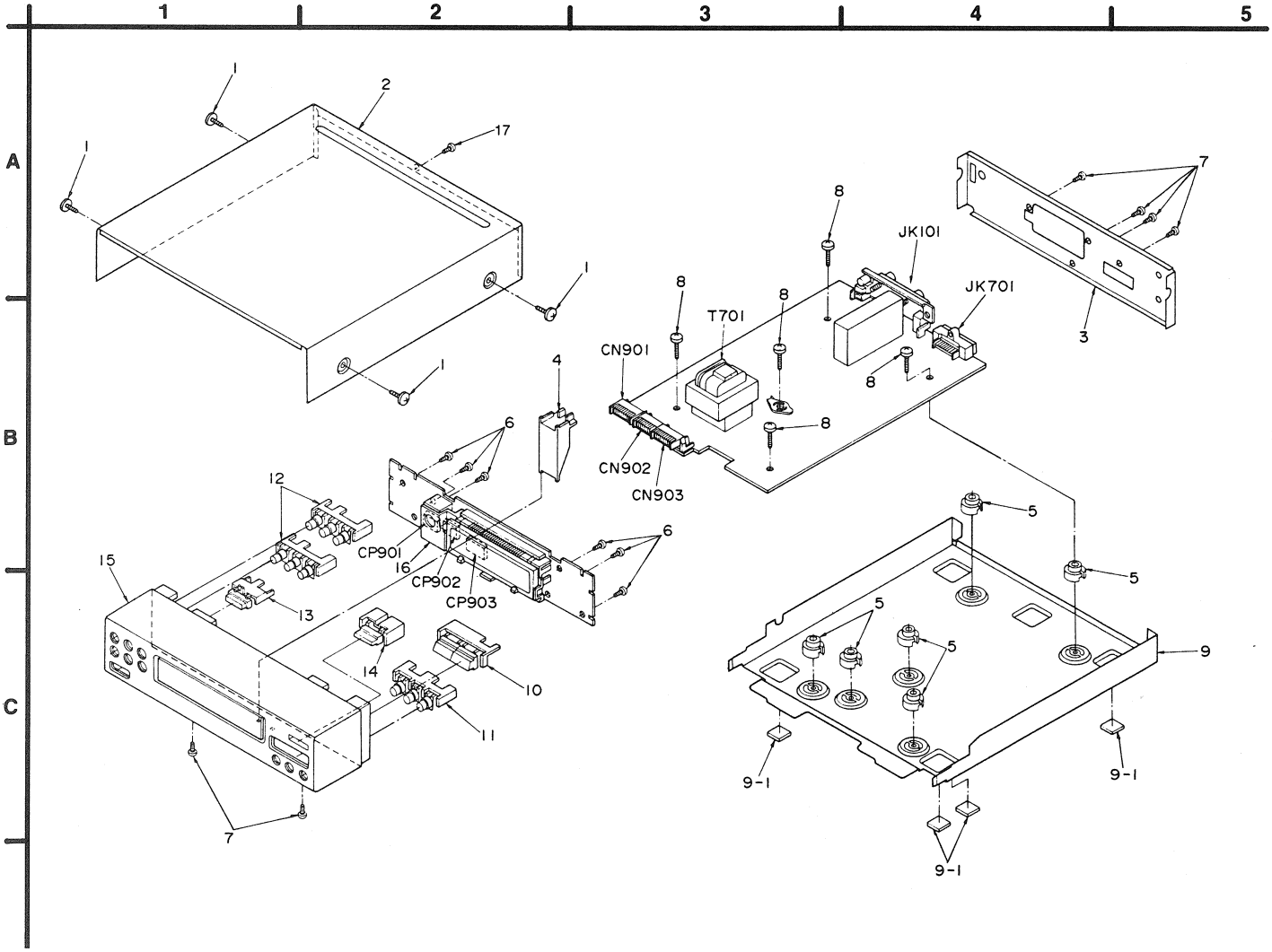

Printed in Japan
F910410300FF/HH/KK/MT