PSG1301016CE
A6

Service Manual

Compact Stereo System

Model No. SC-HC38P

Product Color: (K)...Black Type

⚠ WARNING

This service information is designed for experienced repair technicians only and is not designed for use by the general public.
It does not contain warnings or cautions to advise non-technical individuals of potential dangers in attempting to service a product.
Products powered by electricity should be serviced or repaired only by experienced professional technicians. Any attempt to service or repair the product or products dealt with in this service information by anyone else could result in serious injury or death.

IMPORTANT SAFETY NOTICE

There are special components used in this equipment which are important for safety. These parts are marked by ⚠ in the Schematic Diagrams, Circuit Board Diagrams, Exploded Views and Replacement Parts List. It is essential that these critical parts should be replaced with manufacturer's specified parts to prevent shock, fire or other hazards. Do not modify the original design without permission of manufacturer.

TABLE OF CONTENTS

	PAGE
1 Safety Precautions	**3**
1.1. General Guidelines	3
1.2. Before Repair and Adjustment	4
1.3. Protection Circuitry	4
1.4. Caution For Fuse Replacement	4
1.5. Safety Part Information	4
2 Warning	**5**
2.1. Prevention of Electrostatic Discharge (ESD) to Electrostatically Sensitive (ES) Devices	5
2.2. Precaution of Laser Diode	6
2.3. Service caution based on Legal restrictions	7
2.4. Handling Precaution for Traverse Unit	8
3 Service Navigation	**9**
3.1. Service Information	9
4 Specifications	**10**
4.1. Others (Licenses)	10
5 General/Introduction	**11**
5.1. Inserting media	11
5.2. Media playback operations	12
5.3. Bluetooth® operations	13
6 Location of Controls and Components	**14**
6.1. Main Unit & Remote Control Key Button Operations	14
7 Installation Instructions	**15**
7.1. Connections	15
8 Service Mode	**16**

Panasonic®

© Panasonic Corporation 2013. All rights reserved. Unauthorized copying and distribution is a violation of law.

8.1. Self Diagnostic Mode---------- 16
8.2. Self Diagnostic Function Error Code ---------- 18
8.3. Doctor Mode Table---------- 20
8.4. Sliding Door Operation ---------- 27
9 Service Fixture & Tools ---------- 28
10 Disassembly and Assembly Instructions ---------- 29
10.1. Disassembly flow chart ---------- 30
10.2. Types of Screws---------- 31
10.3. Main Parts Location Diagram ---------- 31
10.4. Disassembly of Base Stand Assembly ---------- 32
10.5. Replacement of Door Assembly---------- 33
10.6. Replacement of Front Ornament Unit (L) & (R)--- 35
10.7. Disassembly of Front Panel Block ---------- 36
10.8. Replacement of iPhone Block ---------- 38
10.9. Disassembly of Interlock Switch P.C.B.---------- 45
10.10. Disassembly of Remote Sensor P.C.B.---------- 47
10.11. Replacement of Gear Box Assembly ---------- 50
10.12. Disassembly of Motor P.C.B. ---------- 52
10.13. Disassembly of Belt & Pulley Gear ---------- 53
10.14. Disassembly of Motor Assembly ---------- 53
10.15. Disassembly of Centering Spring & Centering Stopper---------- 54
10.16. Disassembly of Lever Spring, Trigger Lever & Driver Gear A ---------- 56
10.17. Disassembly of SW Lever, Relay Gear & Driver Gear B ---------- 57
10.18. Disassembly of Shutter & Shutter Spring ---------- 59
10.19. Disassembly of Upper Guide Rail & Top Ornament---------- 60
10.20. Disassembly of Bottom Ornament ---------- 61
10.21. Disassembly of Lower Guide Rail---------- 62
10.22. Disassembly of SMPS P.C.B. ---------- 63
10.23. Replacement of Diode (D1700) ---------- 67
10.24. Replacement of Switching Regulator IC (IC1700) ---------- 68
10.25. Disassembly of Panel P.C.B. & Button Ornament Unit ---------- 70
10.26. Disassembly of Button P.C.B. ---------- 71
10.27. Disassembly of Button Ornament---------- 72
10.28. Disassembly of CD Mechanism ---------- 73
10.29. Disassembly of CD Servo P.C.B.---------- 74
10.30. Disassembly of Jack Lid---------- 76
10.31. Disassembly of Main P.C.B. ---------- 77
10.32. Disassembly of Front Speaker (SP1) ---------- 79
10.33. Disassembly of Front Speaker (SP2) ---------- 82
10.34. Disassembly of Passive Radiator Unit (SP3 & SP4) ---------- 84
11 Service Position ---------- 85
11.1. Checking & Repairing of SMPS P.C.B. ---------- 85
11.2. Checking & Repairing of Panel P.C.B. ---------- 86
11.3. Checking & Repairing of CD Servo P.C.B.--------- 88
11.4. Checking & Repairing of Main P.C.B. (Side B) --- 90
11.5. Checking & Repairing of Main P.C.B. (Side A) --- 91
12 Block Diagram ---------- 93
12.1. SERVO & SYSTEM CONTROL (1/2) BLOCK DIAGRAM---------- 93
12.2. SERVO & SYSTEM CONTROL (2/2) BLOCK DIAGRAM---------- 94
12.3. IC TERMINAL CHART---------- 95
12.4. AUDIO BLOCK DIAGRAM ---------- 96
12.5. POWER SUPPLY (1/2) BLOCK DIAGRAM ------- 97
12.6. POWER SUPPLY (2/2) BLOCK DIAGRAM------- 98
13 Wiring Connection Diagram ---------- 99
14 Schematic Diagram ---------- 101
14.1. Schematic Diagram Notes ---------- 101
14.2. CD SERVO CIRCUIT (1/2)---------- 103
14.3. CD SERVO CIRCUIT (2/2)---------- 104
14.4. MAIN (MICON) CIRCUIT (1/4) ---------- 105
14.5. MAIN (MICON) CIRCUIT (2/4) ---------- 106
14.6. MAIN (MICON) CIRCUIT (3/4) ---------- 107
14.7. MAIN (MICON) CIRCUIT (4/4) ---------- 108
14.8. MAIN (SUPPLY) CIRCUIT (1/2) ---------- 109
14.9. MAIN (SUPPLY) CIRCUIT (2/2) ---------- 110
14.10. MAIN (TUNER) CIRCUIT---------- 111
14.11. REMOTE SENSOR CIRCUIT ---------- 112
14.12. PANEL, INTERLOCK SWITCH & MOTOR CIRCUIT ---------- 113
14.13. BUTTON CIRCUIT ---------- 114
14.14. SMPS CIRCUIT ---------- 115
15 Printed Circuit Board---------- 116
15.1. CD SERVO P.C.B.---------- 116
15.2. MAIN P.C.B. (Side A) ---------- 117
15.3. MAIN P.C.B. (Side B) ---------- 118
15.4. REMOTE SENSOR, PANEL, INTERLOCK SWITCH & MOTOR P.C.B.---------- 119
15.5. BUTTON P.C.B. ---------- 120
15.6. SMPS P.C.B.---------- 121
16 Appendix Information of Schematic Diagram ------- 123
16.1. Voltage Measurement & Waveform Chart-------- 123
16.2. Illustration of IC's, Transistors and Diodes------- 129
16.3. Terminal Function of IC's ---------- 130
17 Exploded View and Replacement Parts List---------- 131
17.1. Exploded View and Mechanical replacement Parts List---------- 131
17.2. Electrical Replacement Parts List ---------- 137

1 Safety Precautions

1.1. General Guidelines

1. **IMPORTANT SAFETY NOTICE**

   There are special components used in this equipment which are important for safety. These parts are marked by ⚠ in the Schematic Diagrams, Circuit Board Layout, Exploded Views and Replacement Parts List. It is essential that these critical parts should be replaced with manufacturer's specified parts to prevent X-RADIATION, shock, fire, or other hazards. Do not modify the original design without permission of manufacturer.
2. An Isolation Transformer should always be used during the servicing of AC Adaptor whose chassis is not isolated from the AC power line. Use a transformer of adequate power rating as this protects the technician from accidents resulting in personal injury from electrical shocks. It will also protect AC Adaptor from being damaged by accidental shorting that may occur during servicing.
3. When servicing, observe the original lead dress. If a short circuit is found, replace all parts which have been overheated or damaged by the short circuit.
4. After servicing, see to it that all the protective devices such as insulation barriers, insulation papers shields are properly installed.
5. After servicing, make the following leakage current checks to prevent the customer from being exposed to shock hazards.

1.1.1. Leakage Current Cold Check

1. Unplug the AC cord and connect a jumper between the two prongs on the plug.
2. measure the resistance value, with an ohmmeter between the jumpered AC plug and each exposed metallic cabinet part on the equipment such as screwheads, connectors, control shafts, etc. When the exposed metallic part has a return path to the chassis, the reading should be between 1MΩ and 5.2MΩ. When the exposed metal does not have a return path to the chassis, the reading must be ∞

1.1.2. Leakage Current Hot Check

1. Plug the AC cord directly into the AC outlet. Do not use an isolation transformer for this check.
2. Connect a 1.5kΩ, 10 watts resistor, in parallel with a 0.15μF capacitors, between each exposed metallic part on the set and a good earth ground such as a water pipe, as shown in Figure 1-1.
3. Use an AC voltmeter, with 1000 ohms/volt or more sensitivity, to measure the potential across the resistor.
4. Check each exposed metallic part, and measure the voltage at each point.
5. Reverse the AC plug in the AC outlet and repeat each of the above measurements.
6. The potential at any point should not exceed 0.75 volts RMS. A leakage current tester (Simpson Model 229 or equivalent) may be used to make the hot checks, leakage current must not exceed 1/2 milliamp. In case a measurement is outside of the limits specified, there is a possibility of a shock hazard, and the equipment should be repaired and rechecked before it is returned to the customer.

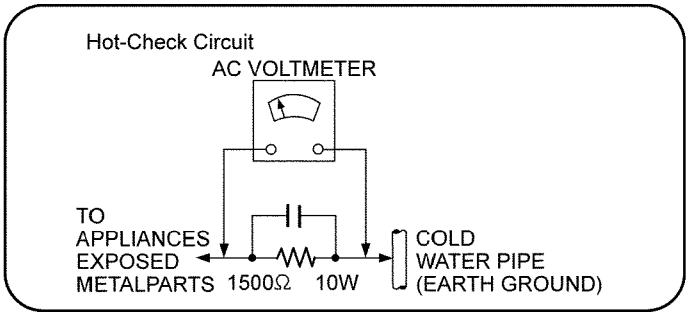

Figure. 1-1

1.2. Before Repair and Adjustment

Disconnect AC power, discharge unit AC Capacitors (C1702, C1710, C1725, C1727, and C1728) through a 10W, 1W resistor to ground.
Caution : DO NOT SHORT-CIRCUIT DIRECTLY (with a screwdriver blade, for instance), as this may destroy solid state devices.
After repairs are completed, restore power gradually using a variac, to avoid overcurrent.

- Current consumption at AC 120V, at 60Hz in NO SIGNAL mode (at volume min in FM Tuner mode) should be ~200 mA.

1.3. Protection Circuitry

The protection circuitry may have operated if either of the following conditions are noticed:
- No sound is heard when the power is turned on.
- Sound stops during a performance.

The function of this circuitry is to prevent circuitry damage if, for example, the positive and negative speaker connection wires are "shorted", or if speaker systems with an impedance less than the indicated rated impedance of the amplifier are used.
If this occurs, follow the procedure outlines below:
1. Turn off the power.
2. Determine the cause of the problem and correct it.
3. Turn on the power once again after one minute.

Note:
When the protection circuitry functions, the unit will not operate unless the power is first turned off and then on again.

1.4. Caution For Fuse Replacement

CAUTION:

Replace with the same type fuse:
(Manufacturer: Skygate, Type: SCT, F1, T2A, 250V)

1.5. Safety Part Information

Safety Parts List:

There are special components used in this equipment which are important for safety.
These parts are marked by ⚠ in the Schematic Diagrams, Exploded View & Replacement Parts List. It is essential that these critical parts should be replaced with manufacturer's specified parts to prevent shock, fire or other hazards. Do not modify the original design without permission of manufacturer.

Safety	Ref. No.	Part No.	Part Name & Description	Remarks
⚠	50	RGP1639-K	REAR CANINET	
⚠	64	RMV0410	SMPS INSULATOR SHEET C	
⚠	65	RMV0415	SMPS INSULATOR SHEET B	
⚠	68	RSC1197	SMPS BRACKET	
⚠	69	RSC1198	SMPS SHIELD PLATE	
⚠	301	RAE5301Z-V	TRAVERSE UNIT	
⚠	A1	N2QAYC000082	REMOTE CONTROL	
⚠	A2	K2CB2CB00022	AC CORD	
⚠	A3	RQT9742-P	O/I BOOK (En)	
⚠	C1702	F0CAF224A105	0.22uF	
⚠	C1710	F1BAF471A013	470pF	
⚠	C1725	F0CAF104A105	0.1uF	
⚠	C1727	F1BAF1020020	1000pF	
⚠	C1728	F1BAF1020020	1000pF	
⚠	F1	K5G202Y00006	FUSE	
⚠	L1702	G0B922G00002	LINE FILTER	
⚠	P1751	K2AB2B000007	AC INLET	
⚠	PC1702	B3PBA0000579	PHOTO COUPLER	
⚠	PCB5	REP4871BA	SMPS P.C.B.	(RTL)
⚠	R1724	ERJ12YJ105U	1M 1/2W	
⚠	R1726	ERJ12YJ105U	1M 1/2W	
⚠	T1700	G4DYZ0000071	TRANSFORMER	
⚠	Z1752	ERZV10V511CS	ZNR	(E.S.D)

2 Warning

2.1. Prevention of Electrostatic Discharge (ESD) to Electrostatically Sensitive (ES) Devices

Some semiconductor (solid state) devices can be damaged easily by static electricity. Such components commonly are called Electrostatically Sensitive (ES) Devices.

Examples of typical ES devices are IC (integrated circuits) and some field-effect transistors and semiconductor "chip" components.

The following techniques should be used to help reduce the incidence of component damage caused by electrostatic discharge (ESD).

1. Immediately before handling any semiconductor component or semiconductor-equipped assembly, drain off any ESD on your body by touching a known earth ground. Alternatively, obtain and wear a commercially available discharging ESD wrist strap, which should be removed for potential shock reasons prior to applying power to the unit under test.
2. After removing an electrical assembly equipped with ES devices, place the assembly on a conductive surface such as aluminum foil, to prevent electrostatic charge buildup or exposure of the assembly.
3. Use only a grounded-tip soldering iron to solder or unsolder ES devices.
4. Use only an anti-static solder removal device. Some solder removal devices not classified as “anti-static (ESD protected)” can generate electrical charge sufficient to damage ES devices.
5. Do not use freon-propelled chemicals. These can generate electrical charges sufficient to damage ES devices.
6. Do not remove a replacement ES device from its protective package until immediately before you are ready to install it. (Most replacement ES devices are packaged with leads electrically shorted together by conductive foam, aluminum foil or comparable conductive material).
7. Immediately before removing the protective material from the leads of a replacement ES device, touch the protective material to the chassis or circuit assembly into which the device will be installed.
   CAUTION:
   Be sure no power is applied to the chassis or circuit, and observe all other safety precautions.
8. Minimize bodily motions when handling unpackaged replacement ES devices. (Otherwise harmless motion such as the brushing together of your clothes fabric or the lifting of your foot from a carpeted floor can generate static electricity (ESD) sufficient to damage an ES device).

IMPORTANT SAFETY NOTICE

There are special components used in this equipment which are important for safety. These parts are marked by ⚠ in the Schematic Diagrams, Circuit Board Diagrams, Exploded Views and Replacement Parts List. It is essential that these critical parts should be replaced with manufacturer's specified parts to prevent shock, fire or other hazards. Do not modify the original design without permission of manufacturer.

2.2. Precaution of Laser Diode

CAUTION!
THIS PRODUCT UTILIZES A LASER.
USE OF CONTROLS OR ADJUSTMENTS OR PERFORMANCE OF PROCEDURES OTHER THAN THOSE SPECIFIED HEREIN MAY RESULT IN HAZARDOUS RADIATION EXPOSURE.

Caution:

This product utilizes a laser diode with the unit turned "on", invisible laser radiation is emitted from the pickup lens.
Wavelength: 790 nm (CD)
Maximum output radiation power from pickup: 100 μW/VDE
Laser radiation from the pickup unit is safety level, but be sure the followings:

1. Do not disassemble the pickup unit, since radiation from exposed laser diode is dangerous.
2. Do not adjust the variable resistor on the pickup unit. It was already adjusted.
3. Do not look at the focus lens using optical instruments.
4. Recommend not to look at pickup lens for a long time.

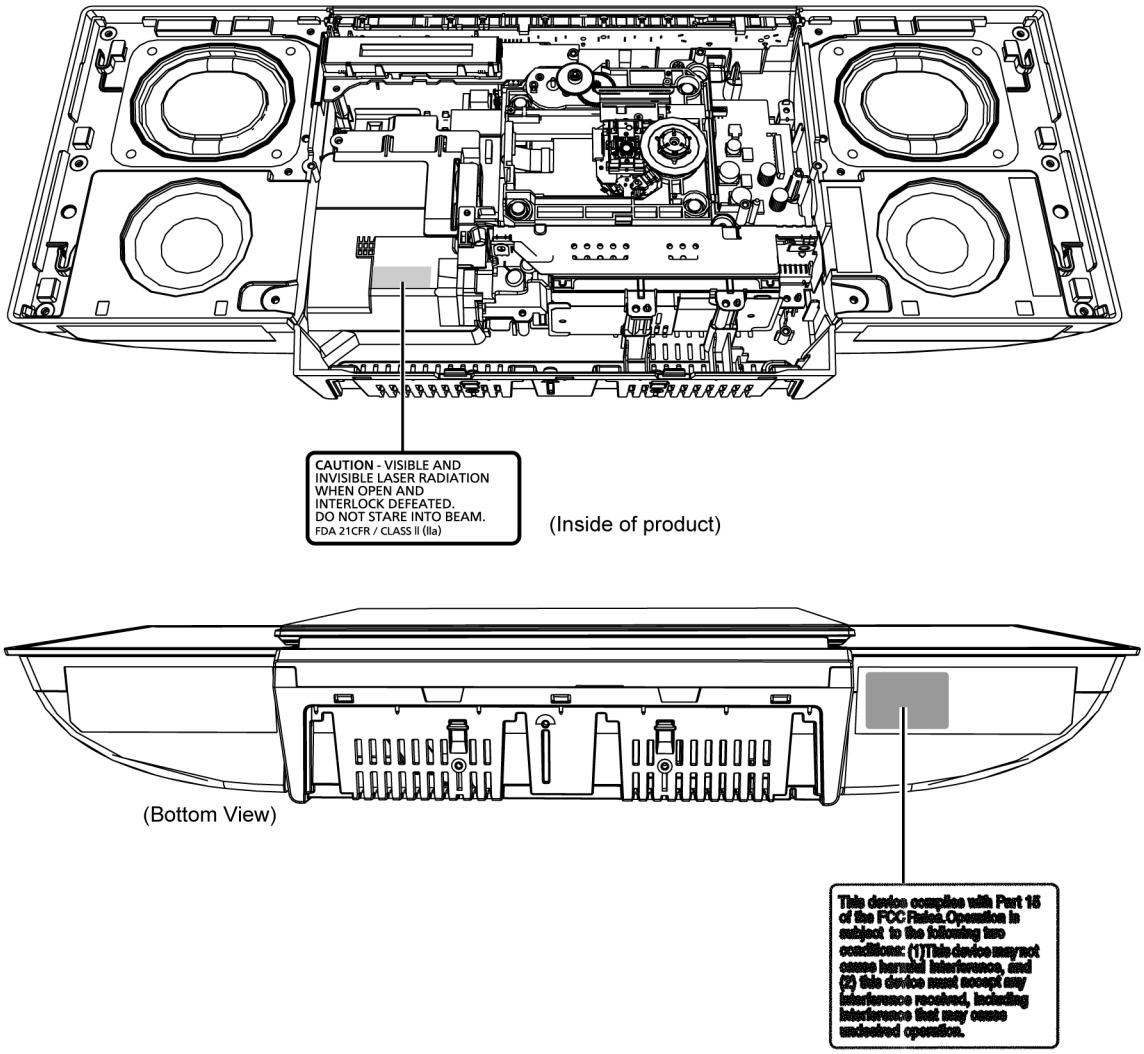

2.3. Service caution based on Legal restrictions

2.3.1. General description about Lead Free Solder (PbF)

The lead free solder has been used in the mounting process of all electrical components on the printed circuit boards used for this equipment in considering the globally environmental conservation.

The normal solder is the alloy of tin (Sn) and lead (Pb). On the other hand, the lead free solder is the alloy mainly consists of tin (Sn), silver (Ag) and Copper (Cu), and the melting point of the lead free solder is higher approx.30 degrees C (86°F) more than that of the normal solder.

Definition of PCB Lead Free Solder being used

The letter of “PbF” is printed either foil side or components side on the PCB using the lead free solder. (See right figure)	PbF

Service caution for repair work using Lead Free Solder (PbF)

- The lead free solder has to be used when repairing the equipment for which the lead free solder is used.
  (Definition: The letter of “PbF” is printed on the PCB using the lead free solder.)
- To put lead free solder, it should be well molten and mixed with the original lead free solder.
- Remove the remaining lead free solder on the PCB cleanly for soldering of the new IC.
- Since the melting point of the lead free solder is higher than that of the normal lead solder, it takes the longer time to melt the lead free solder.
- Use the soldering iron (more than 70W) equipped with the temperature control after setting the temperature at 350±30 degrees C (662±86°F).

Recommended Lead Free Solder (Service Parts Route.)

- The following 3 types of lead free solder are available through the service parts route.
  RFKZ03D01K----------(0.3mm 100g Reel)
  RFKZ06D01K----------(0.6mm 100g Reel)
  RFKZ10D01K----------(1.0mm 100g Reel)

Note

* Ingredient: Tin (Sn), 96.5%, Silver (Ag) 3.0%, Copper (Cu) 0.5%, Cobalt (Co) / Germanium (Ge) 0.1 to 0.3%

2.4. Handling Precaution for Traverse Unit

The laser diode in the optical pickup unit may break down due to static electricity of clothes or human body. Special care must be taken avoid caution to electrostatic breakdown when servicing and handling the laser diode in the Traverse Unit.

2.4.1. Cautions to Be Taken in Handling the Optical Pickup Unit

The laser diode in the optical pickup unit may be damaged due to electrostatic discharge generating from clothes or human body. Special care must be taken avoid caution to electrostatic discharge damage when servicing the laser diode.

1. Do not give a considerable shock to the optical pickup unit as it has an extremely high-precise structure.
2. To prevent the laser diode from the electrostatic discharge damage, the flexible cable of the optical pickup unit removed should be short-circuited with a short pin or a clip.
3. The flexible cable may be cut off if an excessive force is applied to it. Use caution when handling the flexible cable.
4. The antistatic FPC is connected to the new optical pickup unit. After replacing the optical pickup unit and connecting the flexible cable, cut off the antistatic FPC.

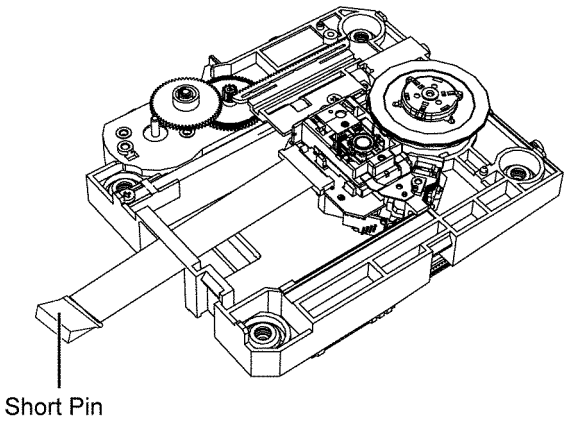

[Caution]
Ground the cable with a clip or a short pin.

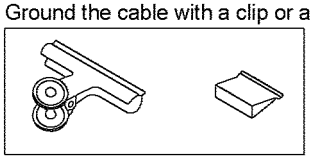

Clip or Short Pin

2.4.2. Grounding for electrostatic breakdown prevention

Some devices such as the CD player use the optical pickup (laser diode) and the optical pickup will be damaged by static electricity in the working environment. Proceed servicing works under the working environment where grounding works is completed.

2.4.2.1. Worktable grounding

1. Put a conductive material (sheet) or iron sheet on the area where the optical pickup is placed, and ground the sheet.

2.4.2.2. Human body grounding

1. Use the anti-static wrist strap to discharge the static electricity form your body.

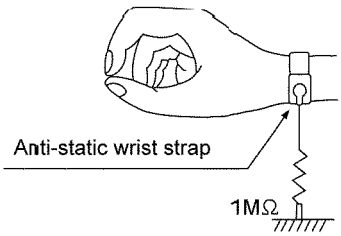

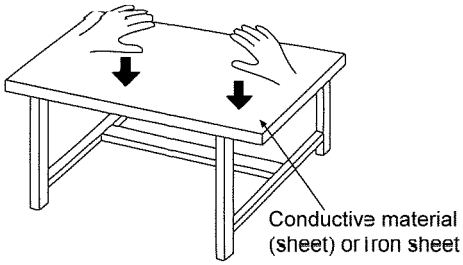

3 Service Navigation

3.1. Service Information

This service manual contains technical information which will allow service personnel's to understand and service this model. Please place orders using the parts list and not the drawing reference numbers.

If the circuit is changed or modified, this information will be followed by supplement service manual to be filed with original service manual.

- **Micro-processor:**

1) The following components are supplied as an assembled part.
   - Micro-processor IC, (IC6002) (RFKWMHC38PM)

4 Specifications

■ General	
Power consumption	34 W
Power consumption in standby mode	Approx. 0.1 W
Power consumption in standby mode (With the iPod dock open)	Approx. 0.4 W
Power supply	AC 120 V, 60 Hz
Dimensions (W x H x D)	500 mm x 204 mm x 84 mm (19 11/16” x 8 1/32” x 3 5/16”) (Depth without stand: 75 mm (3”))
Mass (weight)	Approx. 2.6 kg (5.7 lbs)
Operating temperature range	0 °C to +40 °C (+32 °F to +104 °F)
Operating humidity range	35% to 80 % RH (no condensation)
■ Amplifier Section	
Output power:	
RMS Output Power Stereo Mode	
Front Ch (both ch driven)	20 W per channel (6 Ω), 1 kHz, 10% THD
Total RMS Stereo mode power	40 W
FTC Output Power Stereo mode	
Front Ch (both ch driven)	15 W per channel (6 Ω), 20 Hz to 20 kHz, 1 % THD
Total FTC stereo mode power	30 W
■ Tuner section	
Preset Memory	FM 30 stations
Frequency modulation (FM)	
Frequency range	87.9 MHz to 107.9 MHz (200 kHz step) 87.5 MHz to 108.0 MHz (100 kHz step)
Antenna terminals	75 Ω (unbalanced)
■ Disc Section	
Disc played [8 cm (3”) or 12 cm (5”)]	CD, CD-R/RW (CD-DA)
Pick up	
Wavelength	790 nm (CD)
Audio output (Disc)	
Number of channels	2 ch (FL, FR)
■ Speaker System Section	
Type	1 way, 1 speaker system (Passive Radiator)
Speaker unit(s)	
Full range	6.5 cm (2 1/2”) Cone type x 1 per channel
Passive Radiator	8 cm (3 1/8”) x 2 per channel
Impedance	6 Ω
■ Terminal Section	
“IPOD_DOCK” connection	DC OUT 5 V, 1.0 A MAX
“IPOD_PORT” connection	DC OUT 5 V, 2.1 A MAX
■ Bluetooth Section	
Bluetooth® system specification	V 3.0
Wireless equipment classification	Class 2
Supported profiles	A2DP, AVRCP, GAVDP
Frequency band	2402 MHz to 2480 MHz (Adaptive Frequency Hopping)
Driving distance	10 m (33 ft) Line of sight

- Specifications are subject to change without notice. Mass and dimensions are approximate.
- Total harmonic distortion is measured by the digital spectrum analyzer.

4.1. Others (Licenses)

Made for iPod iPhone iPad

“Made for iPod”, “Made for iPhone”, and “Made for iPad” mean that an electronic accessory has been designed to connect specifically to iPod, iPhone, or iPad, respectively, and has been certified by the developer to meet Apple performance standards.

Apple is not responsible for the operation of this device or its compliance with safety and regulatory standards.

Please note that the use of this accessory with iPod, iPhone, or iPad may affect wireless performance.

iPad, iPhone, iPod, iPod classic, iPod nano, and iPod touch are trademarks of Apple Inc., registered in the U.S. and other countries.

The Bluetooth® word mark and logos are owned by the Bluetooth SIG, Inc. and any use of such marks by Panasonic Corporation is under license.
Other trademarks and trade names are those of their respective owners.

5 General/Introduction

5.1. Inserting media

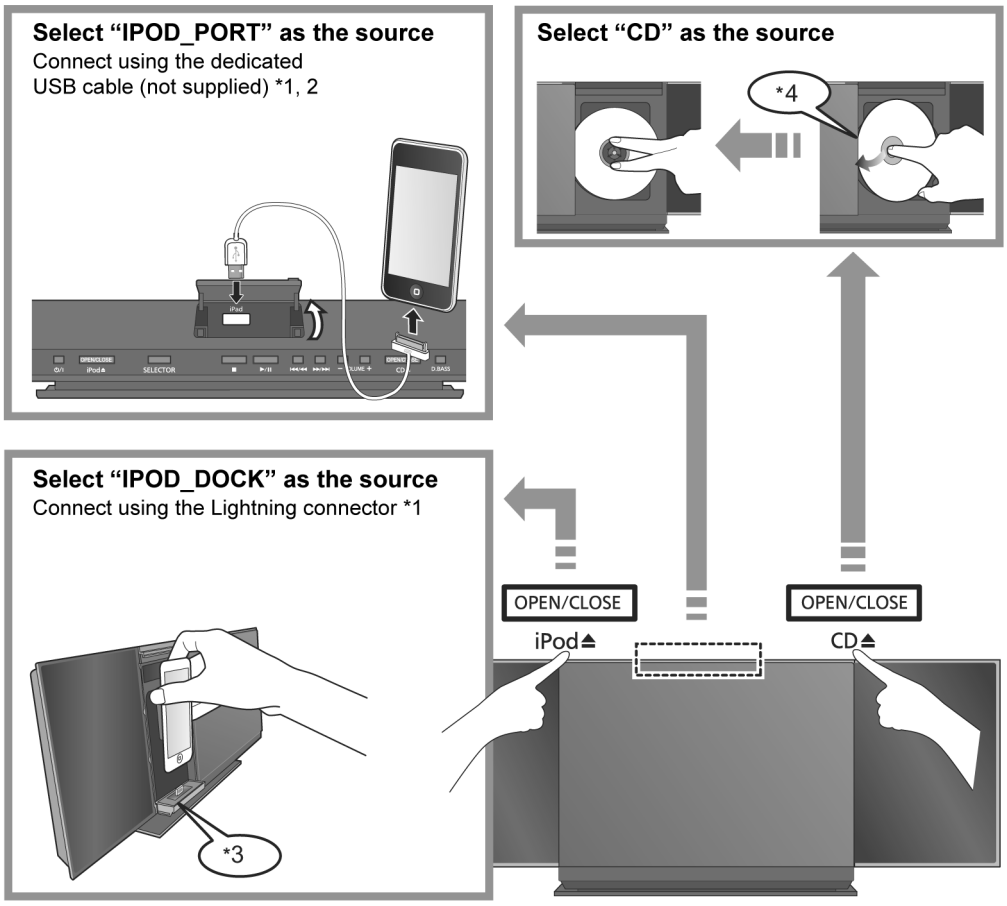

*1: Refer to “Playable media” for compatible models.

*2: When using the “IPOD_PORT” connection, do not connect the following models to this unit:
– iPod classic®, iPod [4th (color display), and 5th (video) generation]
Unexpected behavior may occur.

*3: When using the “IPOD_DOCK” connection:
- Be sure to remove the iPod/iPhone from its case.
- Do not push or pull the dock manually.
- Make sure that the iPod/iPhone is fully inserted and its back is resting against the cushion pad.
- Make sure to hold the dock when removing the iPod/iPhone.

*4: Make sure to tilt the disc so as not to touch the sliding door.

- Do not open the sliding door manually.
- Make sure that the unit does not fall when inserting or removing media.
- When moving this unit, be sure to remove all media and turn this unit to standby mode.

Charging an iPod/iPhone/iPad

Charging starts when an iPod*2/iPhone/iPad is connected to this unit.

- During standby mode, charging will not start from the “IPOD_PORT” connection, however it will start as usual from the “IPOD_DOCK” connection.
  – To charge from the “IPOD_PORT” connection, start the charging before turning this unit to standby mode.

- Check the iPod/iPhone/iPad to see if the battery is fully charged. (Once fully recharged, additional recharging will not occur.)
- If this unit is switched to standby mode “IPOD CHARGING” is shown on the unit’s display.

5.2. Media playback operations

The following marks indicate the availability of the feature.

CD : CD audio in CD-DA format
iPod : Compatible iPod/iPhone/iPad
Bluetooth : Connected Bluetooth® device

Preparation

- Turn the unit on.
- Insert the media or connect the Bluetooth® device.
- Press [CD], [iPod] or [ᛒ] to select the audio source.

Basic play (CD, iPod, Bluetooth)

Play	Press [▶/❚❚].
Stop	Press [■].
Pause	Press [▶/❚❚]. Press again to restart play.
Skip	Press [|◀◀/◀◀] or [▶▶/▶▶|] to skip track.
Search	During play or pause Press and hold [|◀◀/◀◀] or [▶▶/▶▶|]. ● iPod : Backwards search is only within the current track.

CD Bluetooth To display information

Press [DISPLAY] repeatedly.

- To use this unit's remote control with a Bluetooth® device, the Bluetooth® device must support AVRCP (Audio Video Remote Control Profile).
  Depending on the device or the status of the device, some operations may not work.

iPod To navigate through the iPod/iPhone menu

- Open the Music App to use this feature with iPod touch®/iPhone.

– [▲, ▼]: To navigate menu items.
– [OK]: To go to the next menu.
– [iPod MENU]: To return to the previous menu.

- To view the operation, open the sliding door.
- The operation may vary among iPod/iPhone/iPad models.
- Depending on the model (e.g., iPod nano® 7th generation, etc.) it may be necessary to select the album, artist, etc. on the iPod/iPhone/iPad.

Playback modes (CD)

Select the playback mode.

1 Press [PLAY MENU] to select "PLAYMODE" or "REPEAT".

2 Press [▲, ▼] to select the setting and then press [OK].

PLAYMODE	
OFF PLAYMODE	Select to cancel the play mode setting.
1-TRACK	Only plays the selected track. ● "1, ♪" is displayed. (Skip to the desired track)
RANDOM	Plays the contents randomly. ● "RND" is displayed.
REPEAT	
ON REPEAT	Turn on repeat mode. ● " ↻ " is displayed.
OFF REPEAT	Turn off repeat mode.

- When using an iPod/iPhone/iPad or Bluetooth® device, use the setting on the device, if available.
- During random play, you cannot skip to the previous track.
- The mode is canceled when you open the sliding door for discs.

Compatibility CD, iPod/iPhone/iPad, Bluetooth®

• For compatibility of CD, iPod/iPhone/iPad, Bluetooth® please refer to Operating Instructions.

5.3. Bluetooth® operations

Pairing Bluetooth® devices

Preparation

- Turn on the Bluetooth® feature of the device and place the device near this unit.
- If this unit is already connected to a Bluetooth® device, disconnect it.

1 Press [ ] to select "BLUETOOTH".

- If "PAIRING" is indicated on the display, go to step 3.

2 Press [PLAY MENU] to select "NEW DEV." and then press [OK].

↳ "PAIRING" is indicated on the display.

3 Select "SC-HC38" from the Bluetooth® device's Bluetooth® menu.

4 Start play on the Bluetooth® device.

- Refer to the operating instructions of the Bluetooth® device for details.
  If prompted for the passkey, input "0000".
- You can register up to 8 devices with this unit. If a 9th device is paired, the device that has not been used for the longest time will be replaced.

Connecting a paired Bluetooth® device

Preparation

- Turn on the Bluetooth® feature of the device and place the device near this unit.
- If this unit is already connected to a Bluetooth® device, disconnect it.

1 Press [ ] to select "BLUETOOTH".

↳ "READY" is indicated on the display.

2 Select "SC-HC38" from the Bluetooth® device's Bluetooth® menu.

↳ The name of the connected device is indicated on the display for 2 seconds.

3 Start play on the Bluetooth® device.

- This unit can only be connected to one device at a time.
- When "BLUETOOTH" is selected as the source, this unit will automatically try and connect to the last connected Bluetooth® device. The Bluetooth® device will be disconnected if a different audio source (e.g., [CD]) is selected.

Bluetooth® transmission mode

You can change the transmission speed to prioritize transmission quality or sound quality.

Preparation

- Press [ ] to select "BLUETOOTH".
- If a Bluetooth® device is already connected, disconnect it.

1 Press [PLAY MENU] repeatedly to select "LINK MODE".

2 Press [▲, ▼] to select the mode and then press [OK].

MODE 1: Emphasis on connectivity
MODE 2: Emphasis on sound quality

- The default setting is "MODE 1".

Bluetooth® input level

If the sound input level of the Bluetooth® transmission is too low, change the input level setting.

Preparation

- Connect a Bluetooth® device.

1 Press [PLAY MENU] repeatedly to select "INPUT LEVEL".

2 Press [▲, ▼] to select the level and then press [OK].

"LEVEL 0" ↔ "LEVEL +1" ↔ "LEVEL +2"

- Select "LEVEL 0" if the sound is distorted.
- The default setting is "LEVEL 0".

Disconnecting a Bluetooth® device

1 While a Bluetooth® device is connected: Press [PLAY MENU] to select "DISCONNECT?".

2 Press [▲, ▼] to select "OK? YES" and then press [OK].

Compatibility Bluetooth®

- For compatibility of Bluetooth® please refer to Operating Instructions.

6 Location of Controls and Components

6.1. Main Unit & Remote Control Key Button Operations

Unless otherwise indicated, operations are described using the remote control.

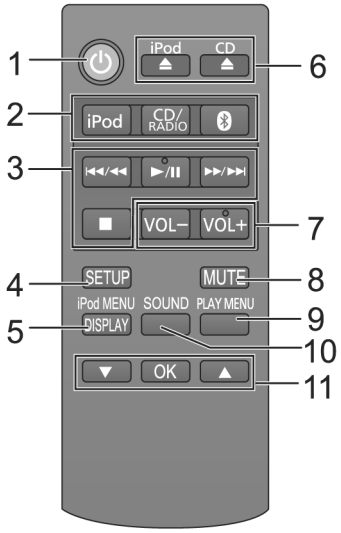

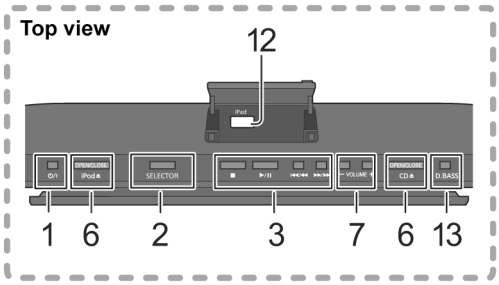

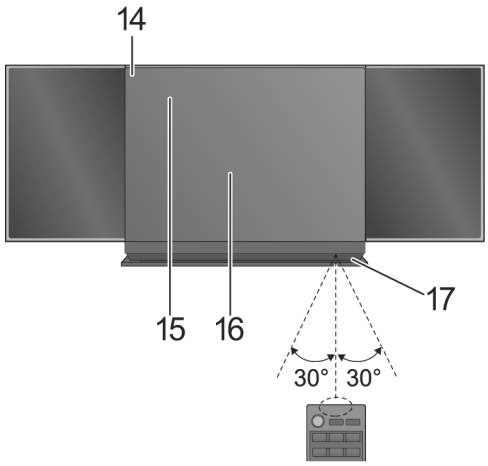

1 Standby/on switch [⏻/I] (⏻)
Press to switch the unit from on to standby mode or vice versa.
In standby mode, the unit is still consuming a small amount of power.

2 Select the audio source
On the remote control
[iPod]: “IPOD_DOCK” ↔ “IPOD_PORT”
[CD/RADIO]: “CD” ↔ “FM”
[✱]: “BLUETOOTH”
On this unit:
“CD” → “FM” → “BLUETOOTH” → “IPOD_DOCK” → “IPOD_PORT” → “CD”

3 Basic playback control buttons

4 Enter setup menu

5 Enter the iPod®/iPhone® menu / Change displayed information

6 Open or close the sliding door

7 Adjust the volume (0 (min) to 50 (max))

8 Mute the sound
Mutes the sound. Press again to cancel.
“MUTE” is also canceled when the volume is adjusted or the unit is turned off.

9 Enter playback menu

10 Enter sound menu

11 Selection/OK

12 “IPOD_PORT” for iPod/iPhone/iPad®

13 Dynamic Bass sound effect selector

14 Power on indicator

15 Display

16 Sliding door

17 Remote control signal sensor
Distance:
Within approx. 7 m (23 ft) directly in front.
- To avoid interference, please do not put any objects in front of signal sensor.

■ Before using for the first time

Remove the insulation sheet Ⓐ.

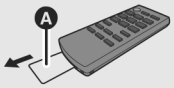

■ To replace a button-type battery

Battery type: CR2025 (Lithium battery)

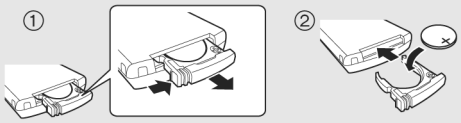

- Set the button-type battery with its (+) mark facing upward.
- Keep the button-type battery out of reach of children to prevent swallowing.

7 Installation Instructions

7.1. Connections

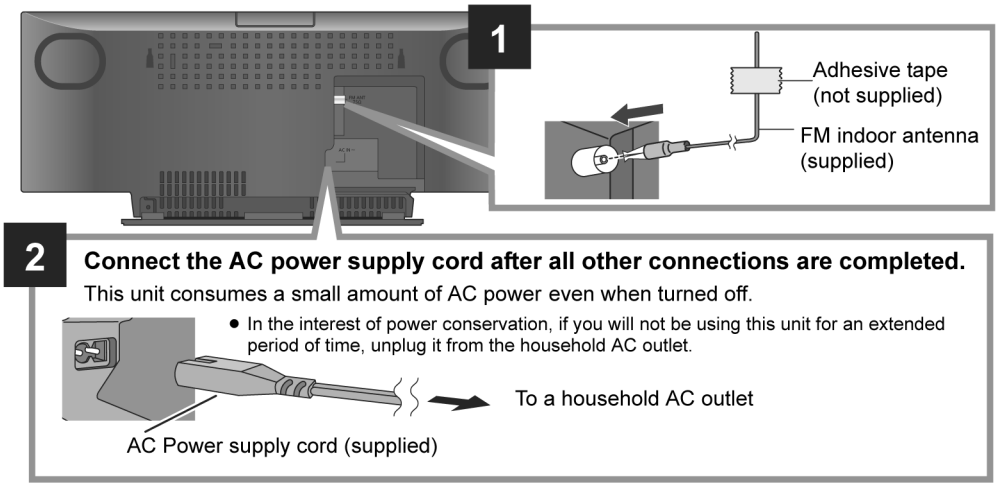

8 Service Mode

This unit is equipped with features of self diagnostic & doctor mode setting for checking the functions & reliability.

8.1. Self Diagnostic Mode

Here is the procedures to enter into Self Diagnostic Mode.
Step 1 : Turn on the unit.
Step 2 : Select CD mode.
Step 3 : Press and hold [■] button for 2 seconds follow by [▶▶/▶▶|] on the unit.
Step 4 : The display show as follow.

SERVICE

To exit the Self Diagnostic Mode

Use either one of the following methods to cancel the Self Diagnostic Mode.

- Press the power button on the main unit or using the remote control.
- Unplug the AC cord.

8.1.1. Self Diagnostic Table 1

Item		FL display	Key operation
Mode name	**Description**		
Self Diagnostic Mode	To enter into self diagnostic checking	SERVICE	Step 1 : Select CD mode (Ensure no disc is inserted). Step 2 : Press and hold [■] follow by [▶▶/▶▶|] on main unit for 2 second .
Error code information	System will perform a check on any unusual/error code from the memory	Example: E F26	Step 1 : In self diagnostic mode, Press [STOP] on main unit. To exit, press [⏻/I] on main unit or remote control.
Delete Error code	To clear the stored in memory (EEPROM IC)	CLEAR	Step 1 : In self diagnostic mode, Press [0] on remote control. To exit, press [⏻/I] on main unit or remote control.

8.1.2. Self Diagnostic Table 2

Item		FL Display	Key Operation
Mode Name	**Description**		**Front Key**
Opecon version	opecon firmware version	(Display 1) 3AB YYY (Display 2) SUME No Rom correction	Press [DISPLAY] button on the remote control for next version display. To exit Service Mode, press [⏻/I] button on main unit or remote control.
LSI version	CD-LSI firmware version	(Display 1) 13C YYY (Display 2) SUM	Press [DISPLAY] button on the remote control for next version display. To exit Service Mode, press [⏻/I] button on main unit or remote control.
Yamaha DSP	DSP firmware version	DSP XXYY firmware mode firmware version number	Press [DISPLAY] button on the remote control for next version display. To exit Service Mode, press [⏻/I] button on main unit or remote control.
Bluetooth module	Bluetooth firmware version	(Display 1) BT version BT YXY flash version flash sub version control version (Display 2) BT EEPROM Version EP0 XXYY EEPROM version EEPROM sub version	Press [DISPLAY] button on the remote control for next version display. To exit Service Mode, press [⏻/I] button on main unit or remote control.

8.2. Self Diagnostic Function Error Code

8.2.1. CD Mechanism Error Code Table

Error Code	Diagnostic Contents	Description of error	Automatic FL Display	Remarks
CD H15	CD Open Abnormal	During operation POS_SW_R On fail to be detected within 4 sec. Error No. shall be clear by force or during cold start.	CD H15	Press [■] on main unit for next error.
CD H16	CD Closing Abnormal	During operation POS_SW_CEN On fail to be detected within 4 sec. Error No. shall be clear by force or during cold start.	CD H16	Press [■] on main unit for next error.
F26	Communication between CD servo LSI and micro-p abnormal.	During switch to CD function, if SENSE = “L” within failsafe time of 20ms.	F26	Press [■] on main unit for next error.

8.2.2. Power Amp Error Code Table

Error Code	Diagnostic Contents	Description of error	Automatic FL Display	Remarks
F61/F76	Power Amp IC output abnormal	During power-on, PDET1, PDET2 & MAINV_DET / TEMP_DET is “L” after 1 sec.	F61 F76	Press [■] on main unit for next error.
SMPS NG	Checking SMPS Type	SMPS type and REGION not match. The unit will shutdown.	SMPS NG	Press [■] on main unit for next error.

8.2.3. iPod Error Code Table

Error Code	Diagnostic Contents	Description of error	Automatic FL Display	Remarks
IPD H15	iPod Open Abnormal	During operation POS_SW_L On fail to be detected within 3 sec. Error No. shall be clear by force or during cold start.	IPD H15	Press [■] on main unit for next error.
IPD H16	iPod Closing Abnormal	During operation POS_SW_CEN On fail to be detected within 3 sec. Error No. shall be clear by force or during cold start.	IPD H16	Press [■] on main unit for next error.

8.2.4. Sliding Door Operation Error Code Table

Error Code	Diagnostic Contents	Description of error	Automatic FL Display	Remarks
ILLEGAL OPEN	Sliding Door Open/Close Abnormal Refer to 8.4 for more information	During Operation 1. Motor set to FREE RUN condition after 2 retry fail to detect any POS_SW. 2. Sliding Door Stop from neutral to iPod open and position sensor could not be detected.	ILLEGAL OPEN	Press [■] on main unit for next error.

8.2.5. Bluetooth Error Code Table

Error Code	Diagnostic Contents	Description of error	Automatic FL Display	Remarks
F70	Bluetooth Communication	Communication between module and micro-p abnormal	F-70	Press [■] on main unit for next error.

8.3. Doctor Mode Table

Note : To enter the Doctor Mode, please use HC35 remote control.
Here is the procedures to enter into Doctor Mode.

Step 1 : Turn on the unit.

Step 2 : Select CD mode.

Step 3 : Pressing and hold [■] on main unit then press [4] follow by [7] using the remote control.

Step 4 : The display show as follow.

To exit the Doctor mode

Use either one of the following methods to cancel the Doctor mode.

- Press the power button of the unit or using the remote control.
- Unplug the AC cord.

8.3.1. Doctor Mode Table 1

Item		FL Display	Key Operation
Mode Name	**Description**		**Front Key**
Doctor Mode	To enter into Doctor Mode for checking of various items and displaying EEPROM and firmware version. Note: The micro-processor version as shown is an example. It will be revise when there is an updates. FL Display sequence Display 1 → 2	(Display 1) 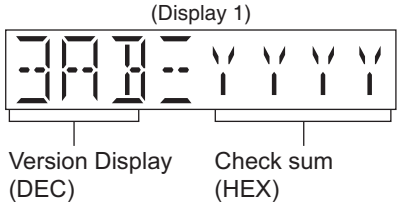 Version Display (DEC) Check sum (HEX) Checksum : (Condition 1) 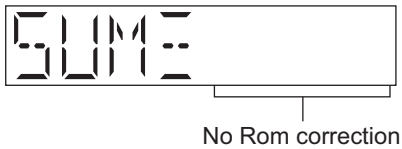 No Rom correction (Display 2) The Checksum of EEPROM and firmware version will be display for 2 sec.	In any mode: Press [■] button on main unit follow by [4] & then [7] on the remote control of HC35. To exit Doctor Mode, press [⏻/I] button on main unit or on the remote control of HC35.

8.3.2. Doctor Mode Table 2

Item		FL Display	Key Operation
Mode Name	**Description**		**Front Key**
FL Display Test	To check the FL segments display (All segments will light up)		In Doctor Mode: Press [1] button on the remote control of HC35. To cancel, press [0] button on remote control. It returns Doctor Mode. To exit Doctor Mode, press [⏻/I] button on main unit or on the remote control of HC35.
Volume Setting	To check for preset volume setting Note : In tuner mode this function is not possible	 The [NO DISC] display will appear after 3s, 	In Doctor Mode: Press [7] button on the remote control of HC35. To cancel, press [0] button on remote control. It returns Doctor Mode. To exit Doctor Mode, press [⏻/I] button on main unit or on the remote control of HC35.
		 The [NO DISC] display will appear after 3s, 	In Doctor Mode: Press [8] button on the remote control of HC35. To cancel, press [0] button on remote control. It returns Doctor Mode. To exit Doctor Mode, press [⏻/I] button on main unit or on the remote control of HC35.
		 The [NO DISC] display will appear after 3s, 	In Doctor Mode: Press [9] button on the remote control of HC35. To cancel, press [0] button on remote control. It returns Doctor Mode. To exit Doctor Mode, press [⏻/I] button on main unit or on the remote control of HC35.
Mecha Sliding Panel Reliability	To check the operation of sliding Panel. Sequence as follow : 1. CD Door set to CLOSE position. 2. CD Door move to the left (CD Open direction) and stop at LEFT position for 1 sec. 3. CD Door move to the right (CD Close direction) and stop at CLOSE position for 1 sec. 4. All the process above is considered as 1 cycle. Step (2) ~ (3) will repeat; Cycle Counter display increase every 1 cycle completed.	 ↓ 	In Doctor Mode: Press [≧10] follow by [2] & then [1] button on the remote control of HC35. To cancel, press [0] button on remote control. It returns Doctor Mode. To exit Doctor Mode, press [⏻/I] button on main unit or on the remote control of HC35.

8.3.3. Doctor Mode Table 3

Item		FL Display	Key Operation
Mode Name	**Description**		**Front Key**
CD Traverse Test Mode	To check for the traverse unit operation. In this mode, the first & last track is access & read. (TOC). It fails when TOC is not completed by 10s or the traverse is out of focus. for more than 2s Refer to 8.3.6 for more information	00000001 The counter will increment by 1 until reach 99999999 ↓ 99999999	In Doctor Mode: Press [≧10] follow by [1] & then [2] button on the remote control of HC35. To cancel, press [0] button on remote control. It returns Doctor Mode. To exit Doctor Mode, press [⏻/I] button on main unit or on the remote control of HC35.
CD Self-Adjusment Display	To display result of self adjustment for CD.	E--0E The [NO DISC] display will appear after 3s, NO DISC	In Doctor Mode: Press [≧10] follow by [1] & then [4] button on the remote control of HC35. To cancel, press [0] button on remote control. It returns Doctor Mode. To exit Doctor Mode, press [⏻/I] button on main unit or on the remote control of HC35.
CD Combination Test	To check the open/close operation & inner outer disc access operation. 1. It fails when CD open/close is not completed by 4s. 2. The disc access fails in 10s. 3. The traverse is out of focus for more than 2s. Refer to 8.3.7 for more information	00000001	In Doctor Mode: Press [≧10] follow by [1] & then [5] button on the remote control of HC35. To cancel, press [0] button on remote control. It returns Doctor Mode. To exit Doctor Mode, press [⏻/I] button on main unit or on the remote control of HC35.
Cold Start	To activate cold start upon next power up. (Backup data are initialized)	-- -- -- -- -- -- -- -- The [NO DISC] display will appear after 2s, NO DISC	In Doctor Mode: Press [SLEEP] button on remote control. To cancel, press [0] button on remote control. It returns Doctor Mode. To exit Doctor Mode, press [⏻/I] button on main unit or on the remote control of HC35.
EEPROM Checksum	To check sum of EEPROM for a simplifield ROM correction. 1. When EEPROM is not detected, the only micro-p's version shall be displayed without an EEPROM's check sum	3AB-YYYY Version Display (DEC) Check sum (HEX) EEPROM not detected only firmware is display SUME	In any mode: Press [■] button on main unit follow by [4] & then [7] on the remote control of HC35. To cancel, press [0] button on remote control. It returns Doctor Mode. To exit Doctor Mode, press [⏻/I] button on main unit or on the remote control of HC35.

8.3.4. Doctor Mode Table 4

Item		FL Display	Key Operation
Mode Name	**Description**		**Front Key**
Region Checking	To check Region setting of unit. Refer to 8.3.8 for the Region Setting destination	REGION Y Region Setting destination	In Doctor Mode: Press [≧10] follow by [1] & then [6] button on the remote control of HC35. To cancel, press [0] button on remote control. It returns Doctor Mode. To exit Doctor Mode, press [⏻/I] button on main unit or on the remote control of HC35.
CD LSI 947 Version Check	To check CD LSI Version No. & checksum correction	13C-YYYY Year of sales ROM type Running version number The display will appear after 2s, SUM-YYYY Check sum display (HEX) The [NO DISC] display will appear after 2s, NO DISC	In Doctor Mode: Press [4] button on the remote control of HC35. To cancel, press [0] button on remote control. It returns Doctor Mode. To exit Doctor Mode, press [⏻/I] button on main unit or on the remote control of HC35.
Yamaha DSP Version Check	To check DSP Firmware mode & Version No.	DSP-XXYY Firmware Version No (00~FF) Firmware Mode (00~FF) The [NO DISC] display will appear after 5s, NO DISC	In Doctor Mode: Press [6] button on the remote control of HC35. To cancel, press [0] button on remote control. It returns Doctor Mode. To exit Doctor Mode, press [⏻/I] button on main unit or on the remote control of HC35.
Model setting	To check Model Setting.	LSI-REGX Model Setting	In Doctor Mode: Press [≧10] follow by [1] & then [8] button on the remote control of HC35. To cancel, press [0] button on remote control. It returns Doctor Mode. To exit Doctor Mode, press [⏻/I] button on main unit or on the remote control of HC35.

8.3.5. Doctor Mode Table 5

Item		FL Display	Key Operation
Mode Name	**Description**		**Front Key**
Forced Sound setting	To check for preset sound setting.	FLAT The display will appear after 2s, HEAVY The [NO DISC] display will appear after 2s, NO DISC	In Doctor Mode: Press [SOUND] button on the remote control of HC35. To cancel, press [0] button on remote control. It returns Doctor Mode. To exit Doctor Mode, press [⏻/I] button on main unit or on the remote control of HC35.
		ON D.BAS The display will appear after 2s, OFF D.BA The [NO DISC] display will appear after 2s, NO DISC	In Doctor Mode: Press [D.BASS] button on the remote control of HC35. To cancel, press [0] button on remote control. It returns Doctor Mode. To exit Doctor Mode, press [⏻/I] button on main unit or on the remote control of HC35.
Clock Setting	To check for Clock setting	PM 12:00	In Doctor Mode: Press [CLOCK/TIMER] button on the remote control of HC35. To cancel, press [0] button on remote control. It returns Doctor Mode. To exit Doctor Mode, press [⏻/I] button on main unit or on the remote control of HC35.
DAMP Safety Test	DSP Safety test setting Refer to 8.3.9 for the Model Setting	SAFETY The [NO DISC] display will appear after 5s, NO DISC	In Doctor Mode: Press [≧10] follow by [2] & then [3] button on the remote control of HC35. To cancel, press [0] button on remote control. It returns Doctor Mode. To exit Doctor Mode, press [⏻/I] button on main unit or on the remote control of HC35.
DAMP Aging Test	MAS-P4-016 power amplifier life test standard	0:XXYY	In Doctor Mode: Press [≧10] follow by [2] & then [4] button on the remote control of HC35. To cancel, press [0] button on remote control. It returns Doctor Mode. To exit Doctor Mode, press [⏻/I] button on main unit or on the remote control of HC35.

8.3.6. CD Traverse Test (For CD)

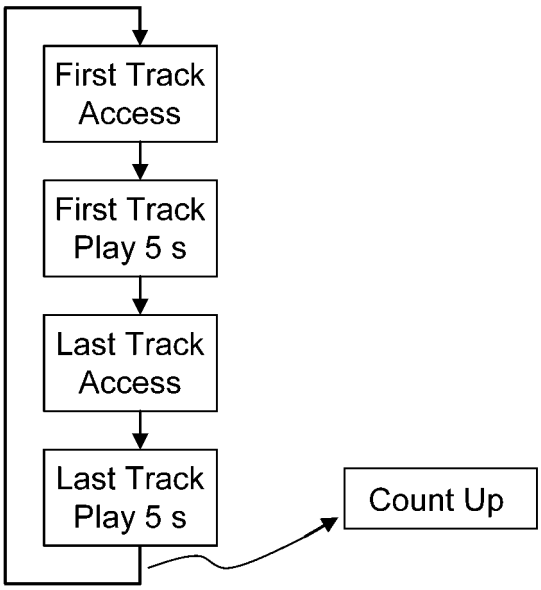

8.3.7. CD Combination Test (For CD)

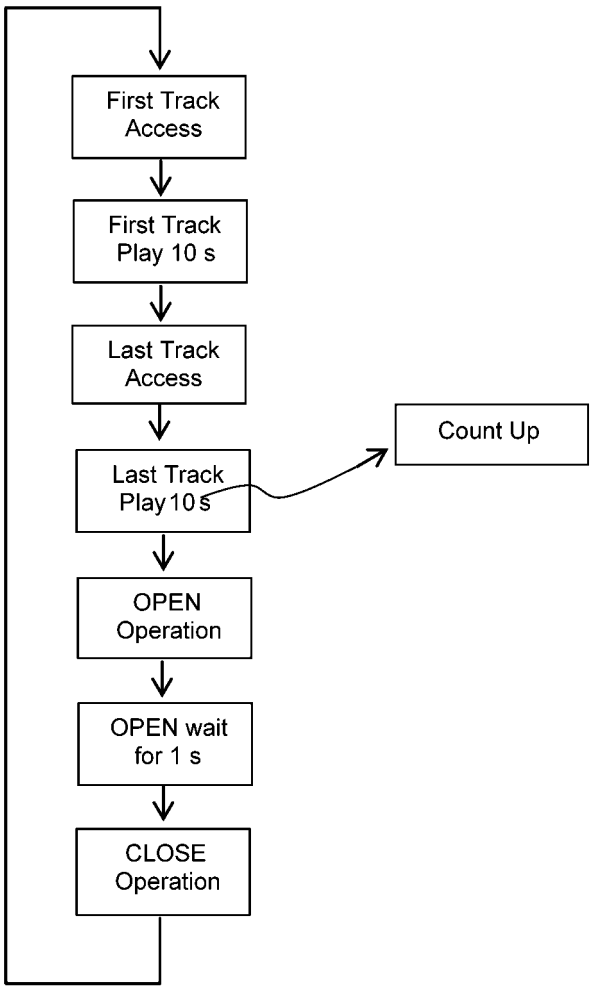

8.3.8. Region Check Table

Model	Region Setting	Series	Country	SMPS ID
HC38	S0	P	North America, Latin America	S1
	S1	Japan	Japan	S3
	S2	GT	Asia Oceania	S3
	S3	EC/EE/EF/EG	Eastern Europe, Europe	S0
	S4	DBEB	UK	S0
	S5	DBEG	Europe	S0
	S6	GN/GK	Asia Oceania, China	S0
	S7	GS	Middle East	S0
	S8	DBGN	Asia Oceania	S0

Note : Please refer to Section 15 (Printed Circuit Board Diagrams) for the SMPS P.C.B and Main P.C.B. part number.

8.3.9. Setting for Special Firm for Temperature Test

Controls		Microprocessor Access
S3D	Effect OFF	WRITE 4130 4000 0000
HE	Effect OFF	WRITE 4173 4000 0000
Helios	Effect OFF	WRITE 4042 4000 0000 WRITE 43F9 4000 0000
SV (Loudness)	Effect OFF	WRITE 4050 0000 4000
Limiter	Effect OFF	WRITE 408D 4000 0000 4000 0000 0000
CF	Effect OFF	WRITE 4069 0000 4000 0000 4000
PEQ	Effect OFF	WRITE 4042 4000 0000

Set off in the end of initial setting, and never turn on according to other setting

8.4. Sliding Door Operation

8.4.1. Basic Operation

1. The sliding open and close operation of the electric panel is done with [CD OPEN/CLOSE] key & [iPod OPEN/CLOSE] key on the main set or remote control.
2. The [CD OPEN/CLOSE] key & [iPod OPEN/CLOSE] key valid during standby condition.
3. When in iPod OPEN condition, the door does not move by pressing [CD OPEN/CLOSE] key.
   Note : Same behaviors during closing/opening.
4. When in CD OPEN condition, the door does not move by pressing [iPod OPEN/CLOSE] key.
   Note : Same behaviors during closing/opening.
5. During playback CD, open the door after stopping playback
6. If the door is pushed in the direction from CD open to neutral, the door is closed. It is equivalent to pressing [CD OPEN/CLOSE] key.
7. CD/iPod [OPEN/CLOSE] key is detected based on trigger up (key release) timing.

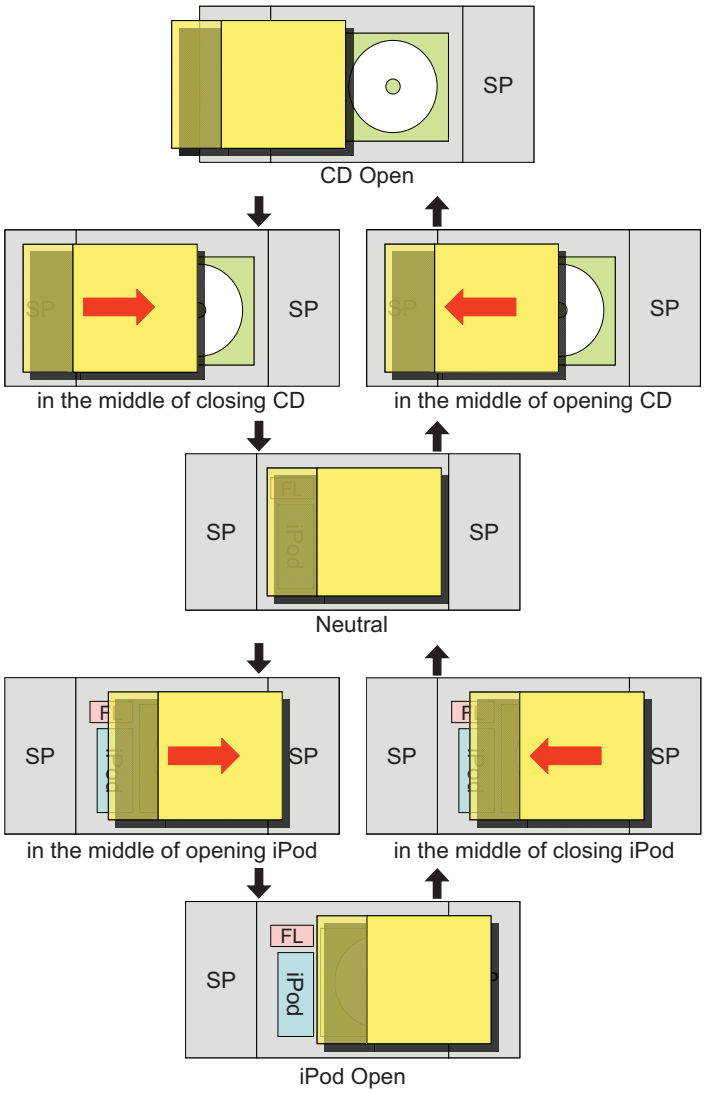

9 Service Fixture & Tools

Prepare service tools before process service position.

Ref. No.	Service Tools		Remarks
SFT1	Main P.C.B. (CN6006) - CD Servo P.C.B. (CN7002)	REE1712 (30P FFC)	
SFT2	Main P.C.B. (CN1100) - SMPS P.C.B. (P1700)	REX1538 (7P Wire)	

10 Disassembly and Assembly Instructions

Caution Note:

- **This section describes the disassembly and/or assembly procedures for all major printed circuit boards & main components for the unit. (You may refer to the section of “Main components and P.C.B Locations” as described in the service manual)**
- **Before carrying out the disassembly process, please ensure all the safety precautions & procedures are followed.**
- **During the disassembly and/or assembly process, please handle with care as there may be chassis components with sharp edges.**
- **Avoid touching heatsinks due to its high temperature after prolong use. (See caution as described below)**

CAUTION: HOT!!
PLEASE DO NOT
TOUCH THE HEAT SINK

- **During disassembly and assembly, please ensure proper service tools, equipments or jigs is being used.**
- **During replacement of component parts, please refer to the section of “Replacement Parts List” as described in the service manual.**
- **Select items from the following indexes when disassembly or replacement are required.**

- **Disassembly of Base Stand Assembly**
- **Replacement of Door Assembly**
- **Replacement of Front Ornament Unit (L) & (R)**
- **Disassembly of Front Panel Block**
- **Replacement of iPhone Block**
- **Disassembly of Interlock Switch P.C.B.**
- **Disassembly of Remote Sensor P.C.B.**
- **Replacement of Gear Box Assembly**
- **Disassembly of Motor P.C.B.**
- **Disassembly of Belt & Pulley Gear**
- **Disassembly of Motor Assembly**
- **Disassembly of Centering Spring & Centering Stopper**
- **Disassembly of Lever Spring, Trigger Lever & Driver Gear A**
- **Disassembly of SW Lever, Relay Gear & Driver Gear B**
- **Disassembly of Shutter & Shutter Spring**
- **Disassembly of Upper Guide Rail & Top Ornament**
- **Disassembly of Bottom Ornament**
- **Disassembly of Lower Guide Rail**
- **Disassembly of SMPS P.C.B.**
- **Replacement of Diode (D1700)**
- **Replacement of Switching Regulator IC (IC1700)**
- **Disassembly of Panel P.C.B. & Button Ornament Unit**
- **Disassembly of Button P.C.B.**
- **Disassembly of Button Ornament**
- **Disassembly of CD Mechanism**
- **Disassembly of CD Servo P.C.B.**
- **Disassembly of Jack Lid**
- **Disassembly of Main P.C.B.**
- **Disassembly of Front Speaker (SP1)**
- **Disassembly of Front Speaker (SP2)**
- **Disassembly of Passive Radiator Unit (SP3 & SP4)**

10.1. Disassembly flow chart

The following chart is the procedure for disassembling the casing and inside parts for internal inspection when carrying out the servicing.
To assemble the unit, reverse the steps shown in the chart below.

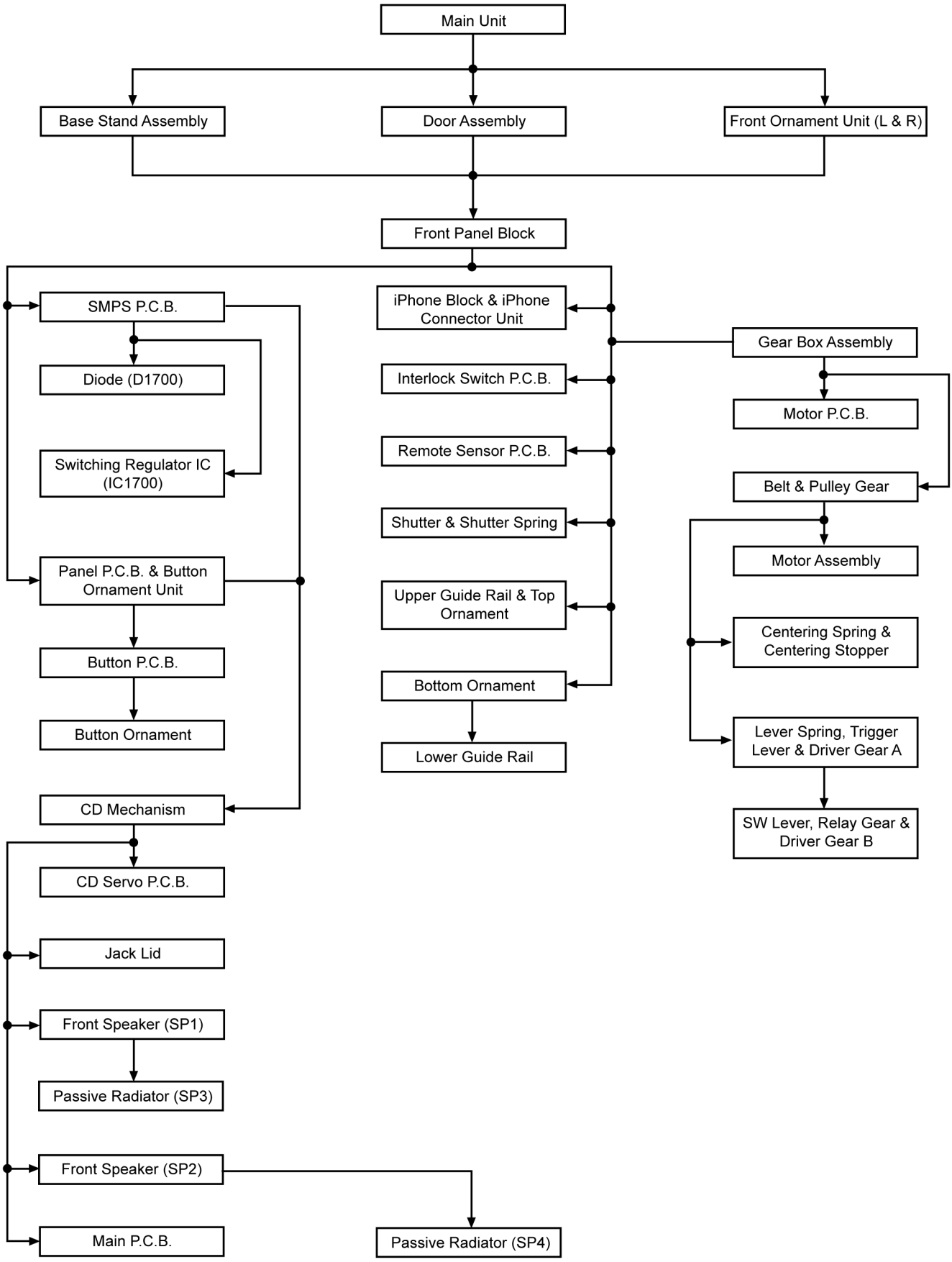

10.2. Types of Screws

CAUTION NOTE:
Please use original screw and at correct locations.

Below shown is part no. of different screw types used:

- ⓐ : RHD26046-K
- ⓑ : VHD1224-1A
- ⓒ : RHD26046
- ⓓ : XTB3+10JFJK
- ⓔ : RHD26043-1
- ⓕ : RHD30092-1
- ⓖ : XTB3+8JFJ-J
- ⓗ : XTN2+6GFJ
- ⓘ : RHD20089

10.3. Main Parts Location Diagram

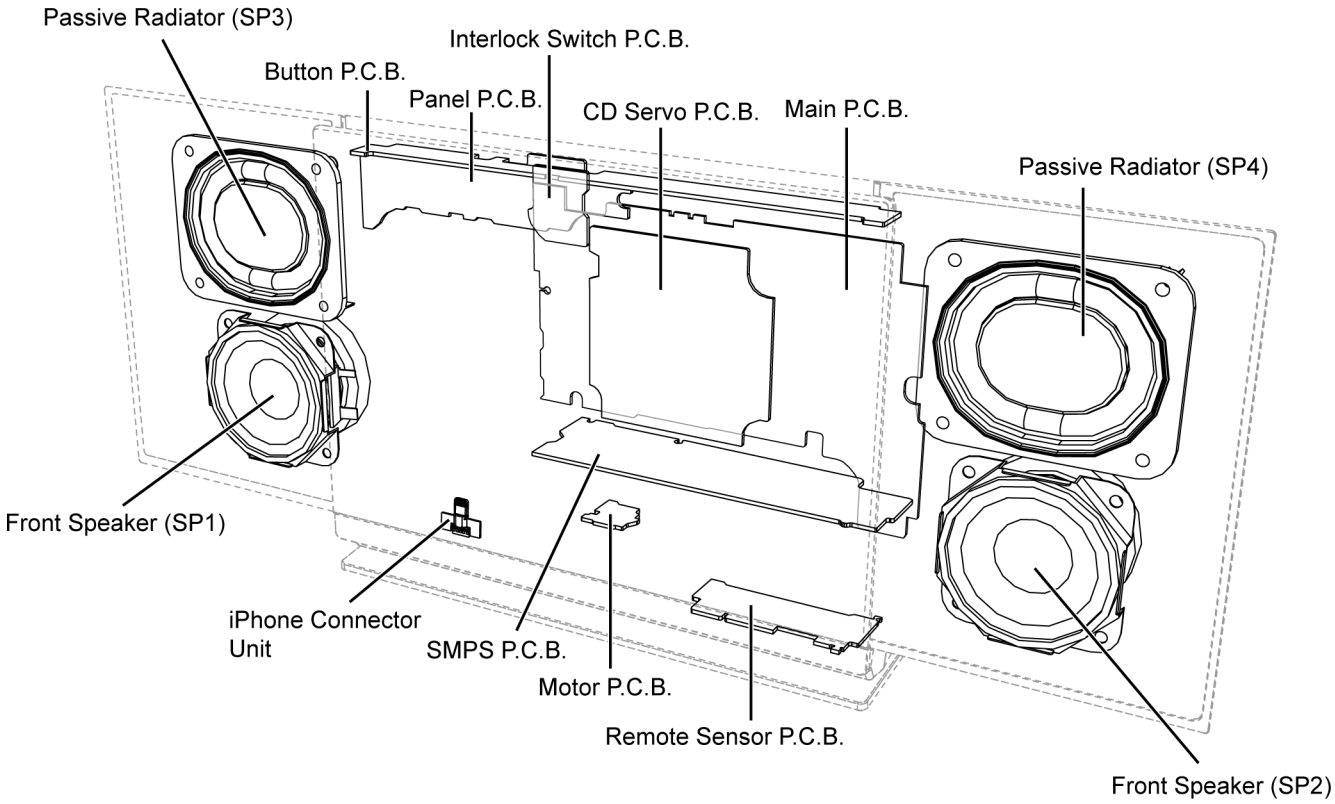

10.4. Disassembly of Base Stand Assembly

Step 1 : Remove 2 screws.

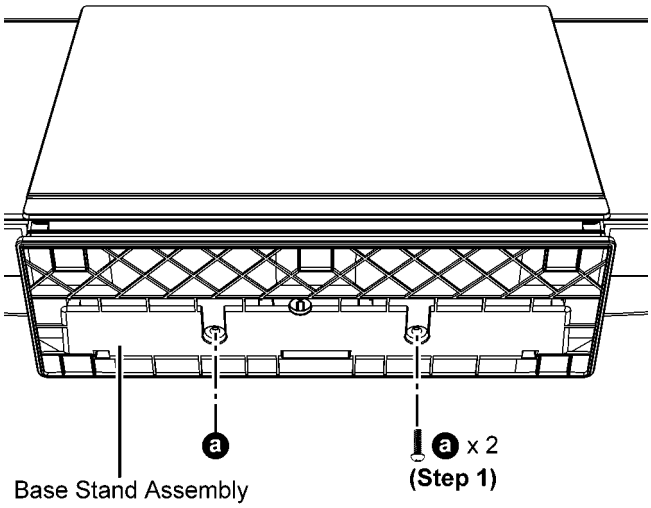

Step 2 : Remove the Base Stand Assembly.

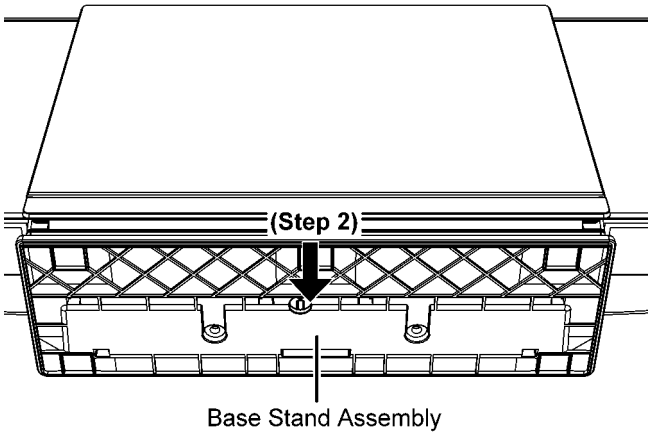

Caution : During assembling, ensure a "tack" Sound is heard when the Base Stand Assembly is fully catch onto the Rear Cabinet Assembly.

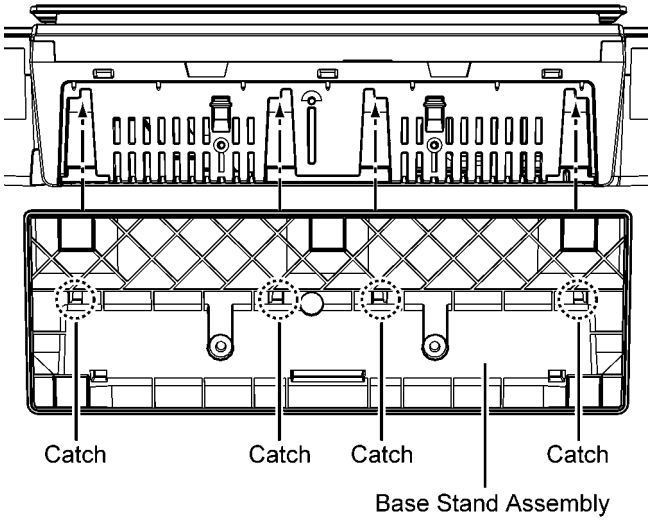

10.5. Replacement of Door Assembly

10.5.1. Disassembly of Door Assembly

Step 1 : Gently push the Door Assembly until it is fully open.

Caution : Do not use strong force during pushing of the Door Assembly.

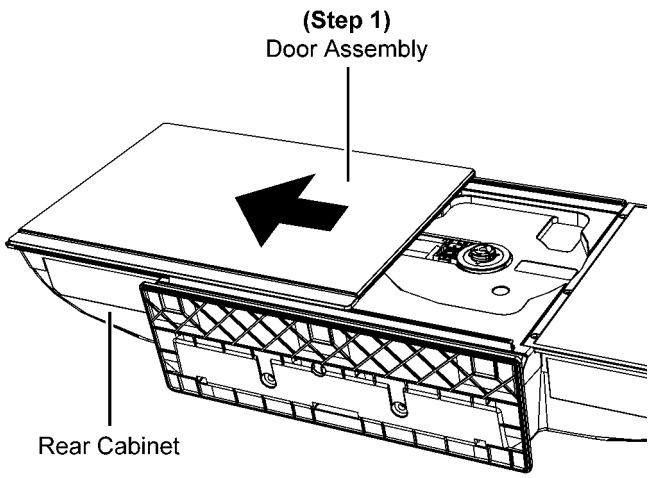

Step 2 : Lift up the Door Assembly as arrow shown in order of sequences (1) to (2).

Step 3 : Gently push the Door Assembly to remove it.

Caution : During disassembling, avoid touching the surface of the OPU lens.

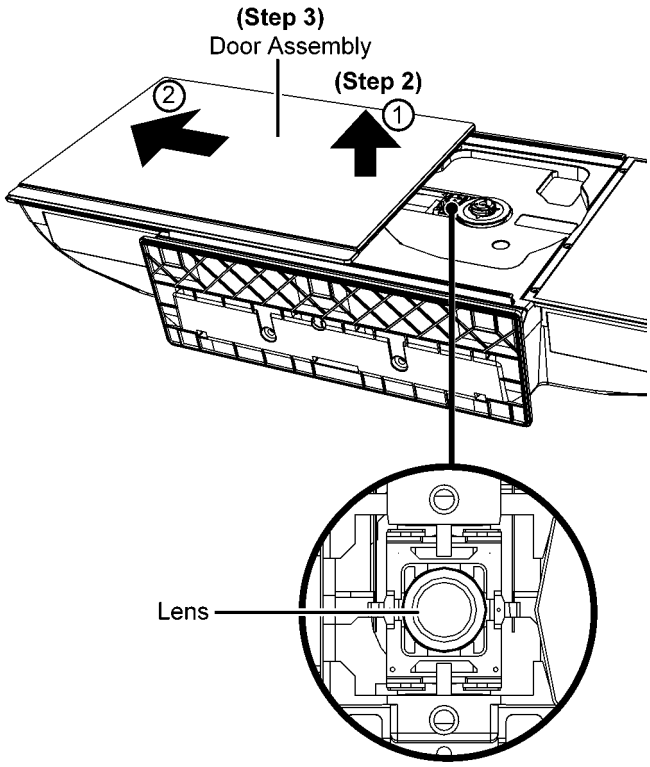

10.5.2. Assembly of Door Assembly

Step 1 : Align the Door Assembly with the (upper & lower guiding rib), guide reel (A & B) on the front panel.

Step 2 : Gently slide the Door Assembly to close it.

Caution : Avoid using strong force, ensure the Door Assembly move smoothly. Remove the Door Assembly & repeat step 1 & step 2 when it stops.

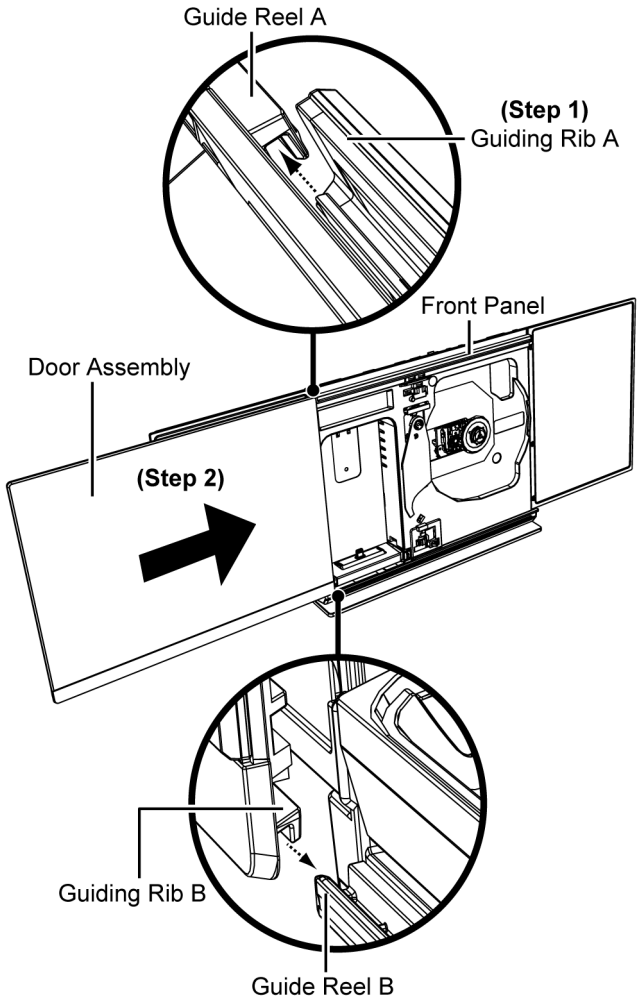

10.5.3. Disassembly of Idling Rack

- Refer to “Disassembly of Door Assembly”

Step 1 : Slide the Idling Rack until it come to a stop.

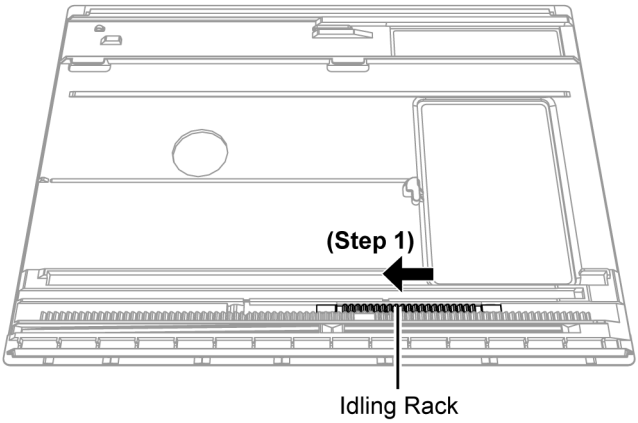

Step 2 : Gently using a Screwdriver to lift up the Idling Rack.
Step 3 : Remove the Idling Rack as arrow shown.

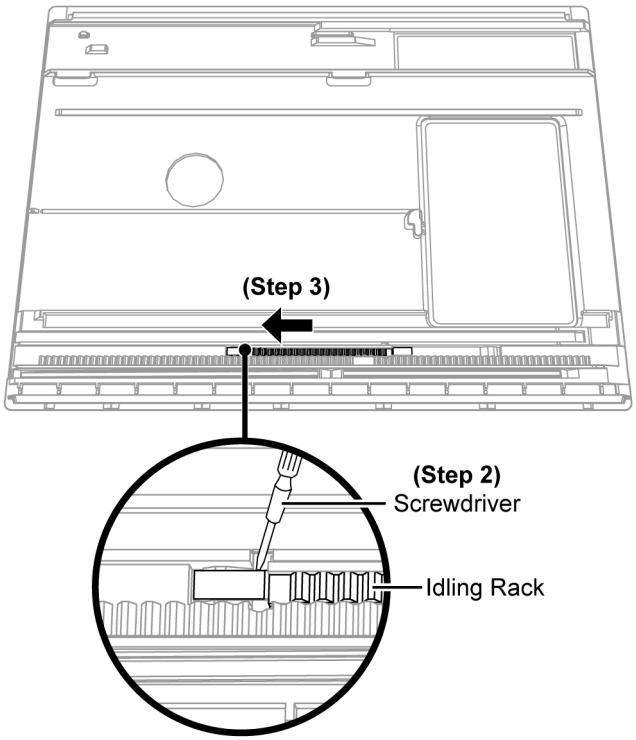

Caution : During assembling, insert the Idling Rack & ensure it is fully catched to the Door Assembly.

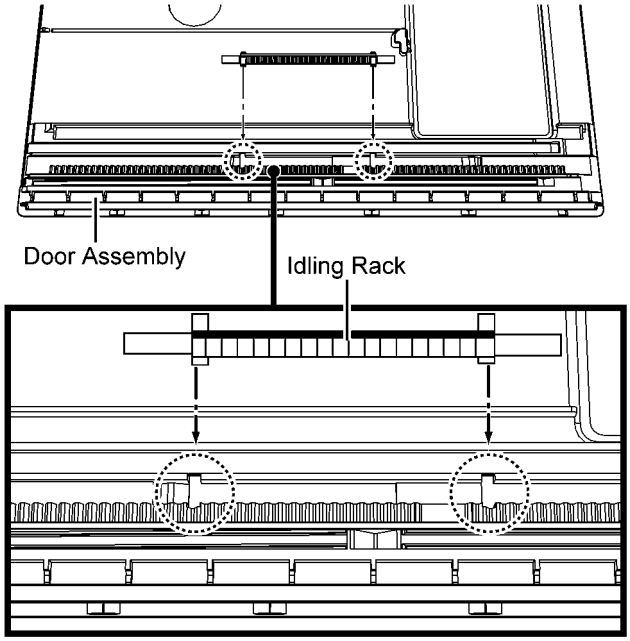

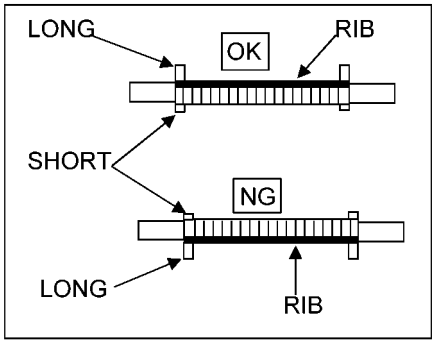

10.6. Replacement of Front Ornament Unit (L) & (R)

Note : Front Ornament Unit (L) & (R) have the same mechanical structure. For disassembling/assembly of Front Ornament Unit (R), repeat the (Step 1) to (Step 3) of 10.6.1./10.6.2.
Below illustrated Front Ornament Unit (L)

- Refer to “Disassembly of Door Assembly”

10.6.1. Disassembly of Front Ornament Unit (L)

Step 1 : Remove 3 screws.
Step 2 : Push the Front Ornament Unit (L) upwards.

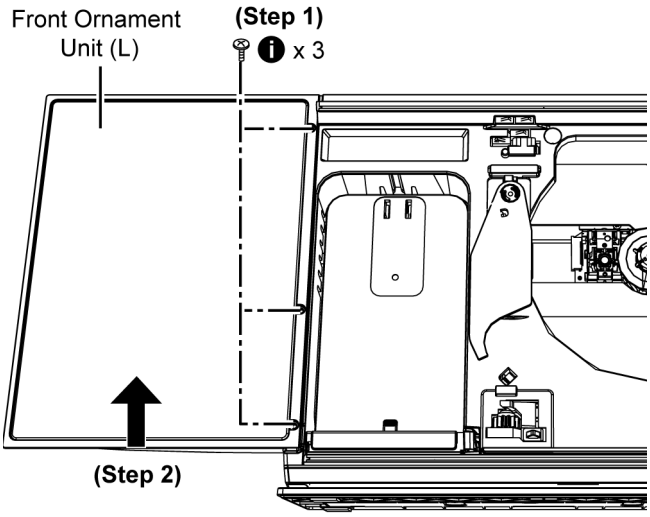

Step 3 : Remove the Front Ornament Unit (L).

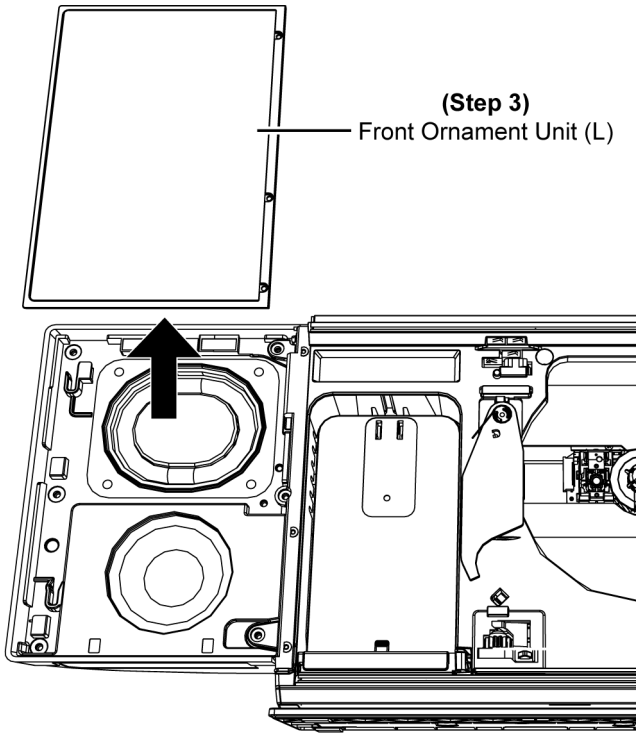

10.6.2. Assembly of Front Ornament Unit (L)

Step 1 : Place the Front Ornament Unit (L) into the Speaker Cabinet Assembly (L).
Caution : During assembling, ensure the Front Ornament Unit (L) is fully catched and inserted into the Speaker Cabinet Assembly (L).

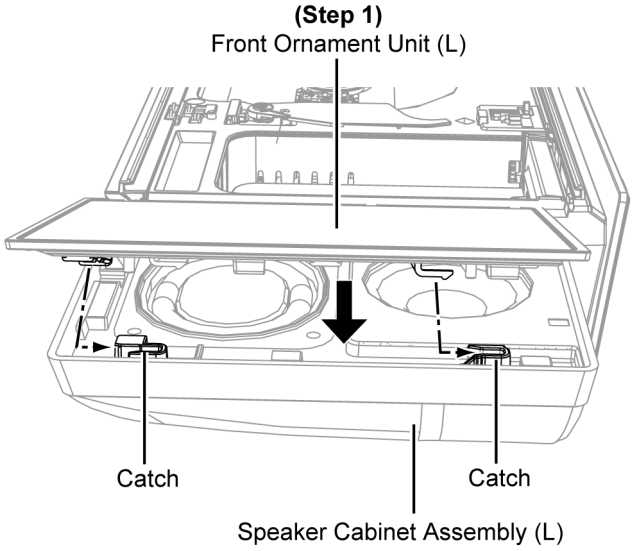

Step 2 : Align the Front Ornament Unit (L) into the Front Speaker Assembly (L) with the bottom end positioned at the dotted line.
Step 3 : Push down Front Ornament Unit (L) to fix it.
Caution : A “click” sound is heard when the Front Ornament Unit (L) is fully catched.

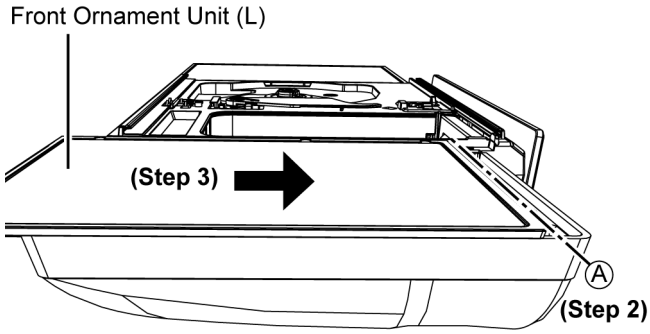

Step 4 : Fix 3 screws.

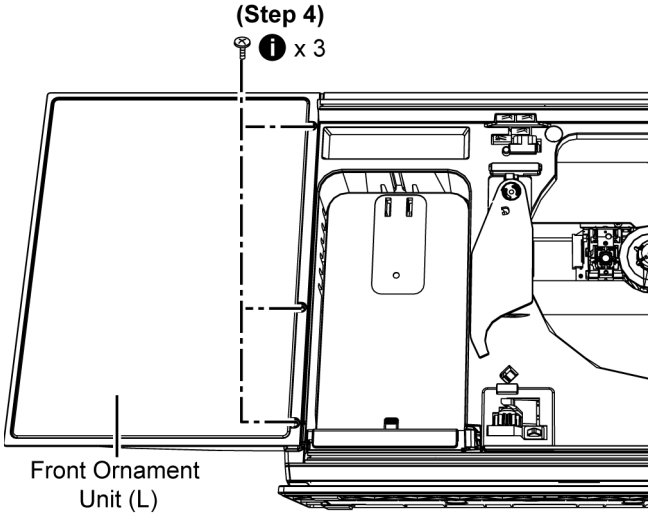

10.7. Disassembly of Front Panel Block

- Refer to “Disassembly of Base Stand Assembly”
- Refer to “Disassembly of Door Assembly”
- Refer to “Disassembly of Front Ornament Unit”

Step 1 : Remove 8 screws.

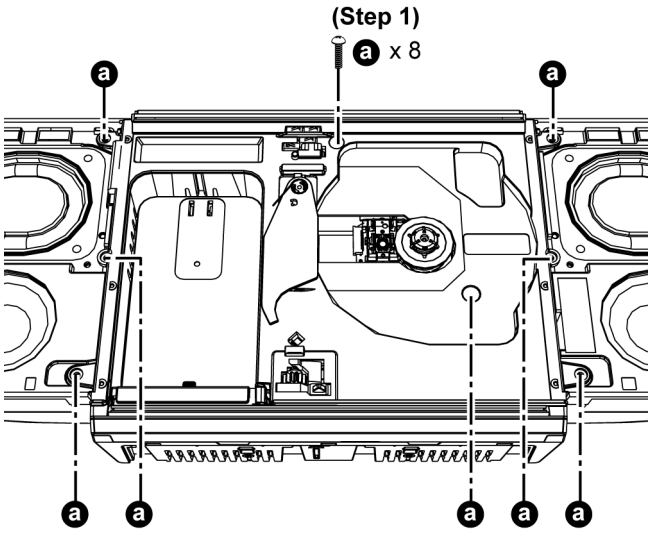

Step 2 : Release 3 catches on the Front Panel Block.

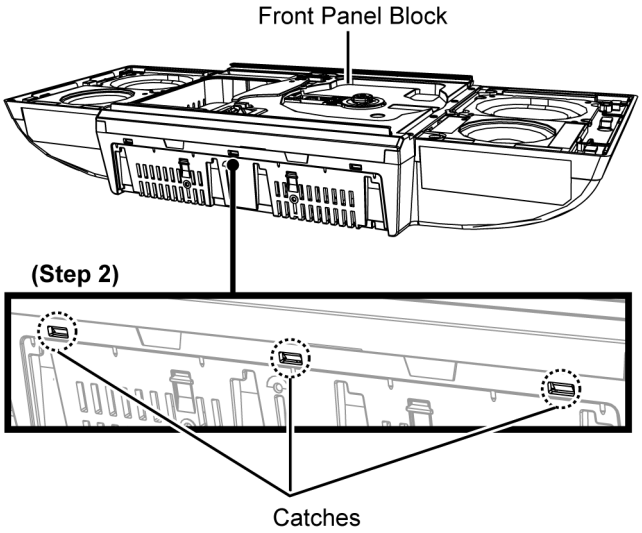

Step 3 : Slightly lift up the Front Panel Block.

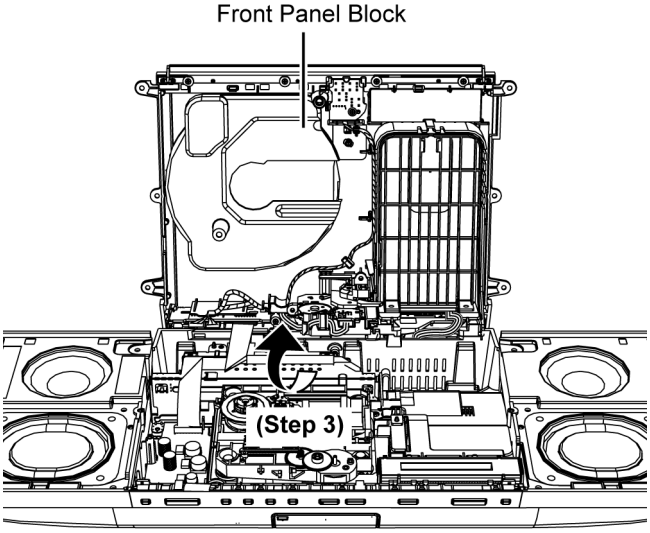

Step 4 : Detach 16P FFC at the connector (CN941) on the Remote Sensor P.C.B..

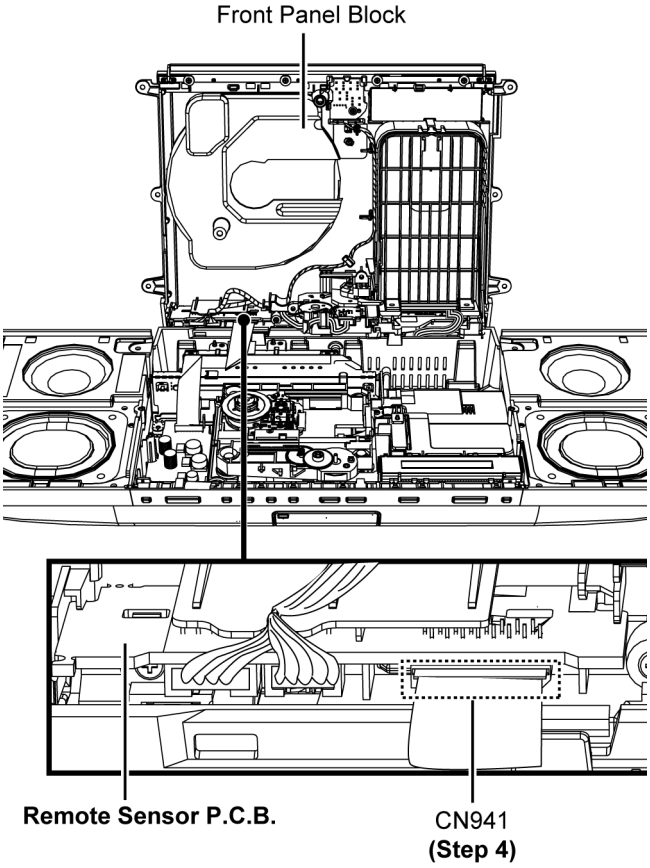

Step 5 : Remove the Front Panel Block.

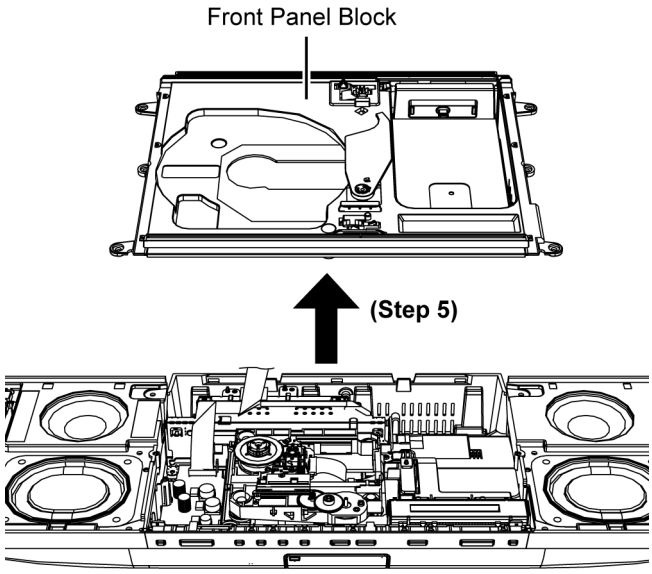

10.8. Replacement of iPhone Block

- Refer to “Disassembly of Base Stand Assembly”
- Refer to “Disassembly of Door Assembly”
- Refer to “Disassembly of Front Ornament Unit”
- Refer to “Disassembly of Front Panel Block”

10.8.1. Disassembly of iPhone Block

Step 1 : Slightly lift up and remove the Slide Guide Pin as shown.

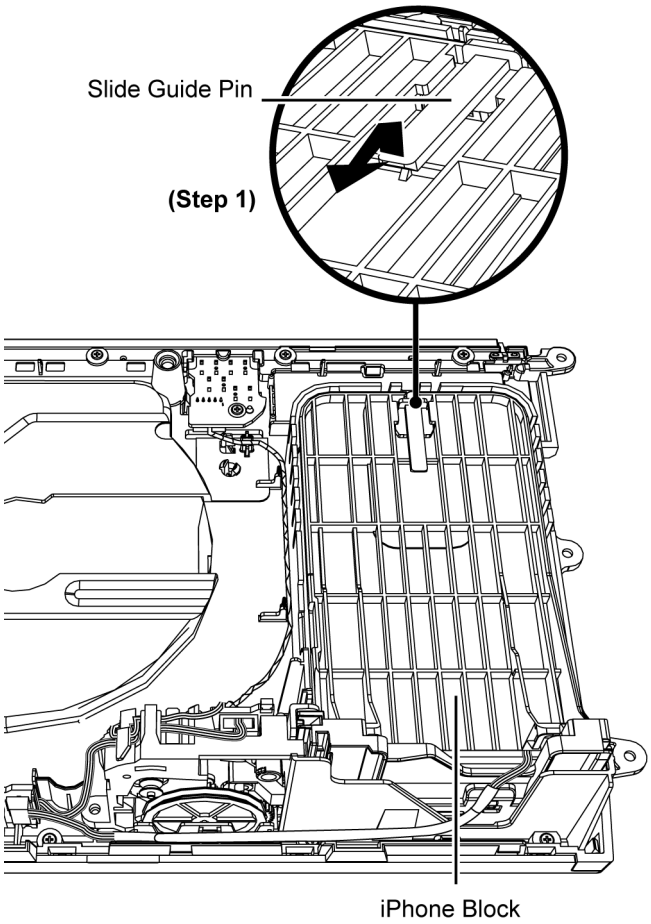

Step 2 : Release the 5P Wire.
Step 3 : Detach 5P wire at the connector (P945) on the Remote Sensor P.C.B..

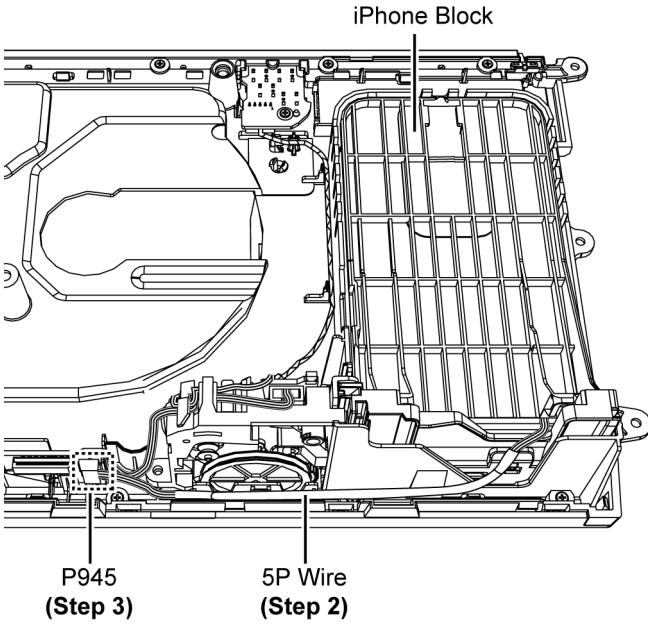

Step 4 : Push the iPhone Block forward until it come to a stop.

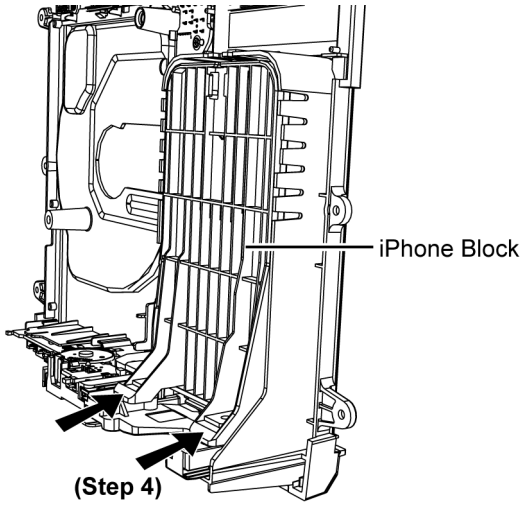

Step 5 : Slightly lift up the iPhone Block from Stopper area as shown and push forward.

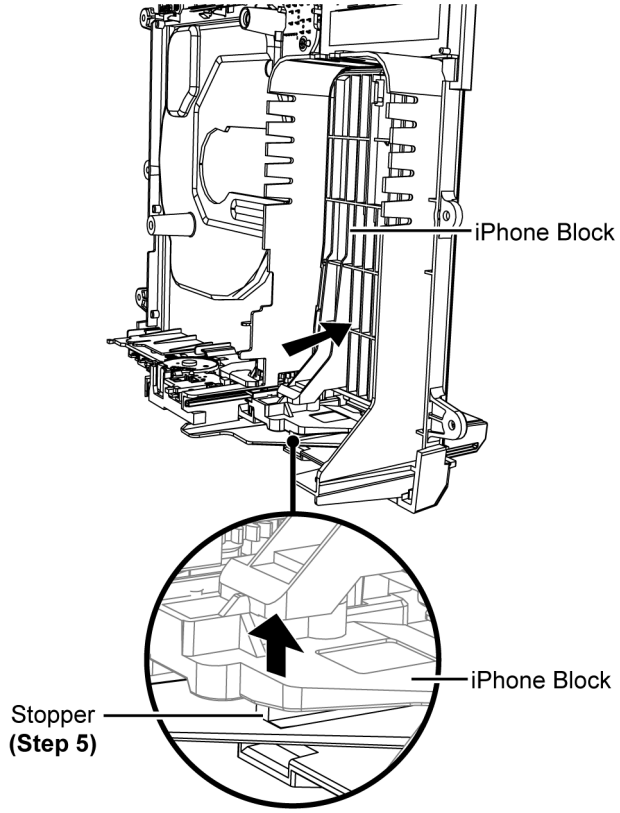

Step 6 : Remove the iPhone Block.

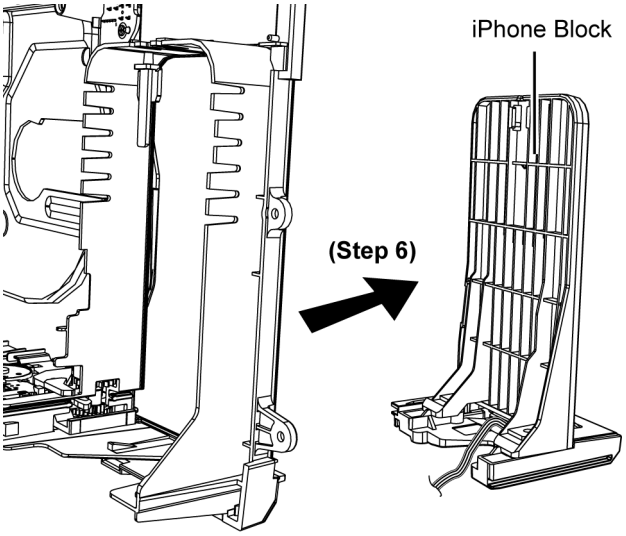

10.8.2. Assembly of iPhone Block

Step 1 : Align the iPhone Block with the guide on the Front Panel Assembly.
Step 2 : Gently push the iPhone Block until it is fully fixed.

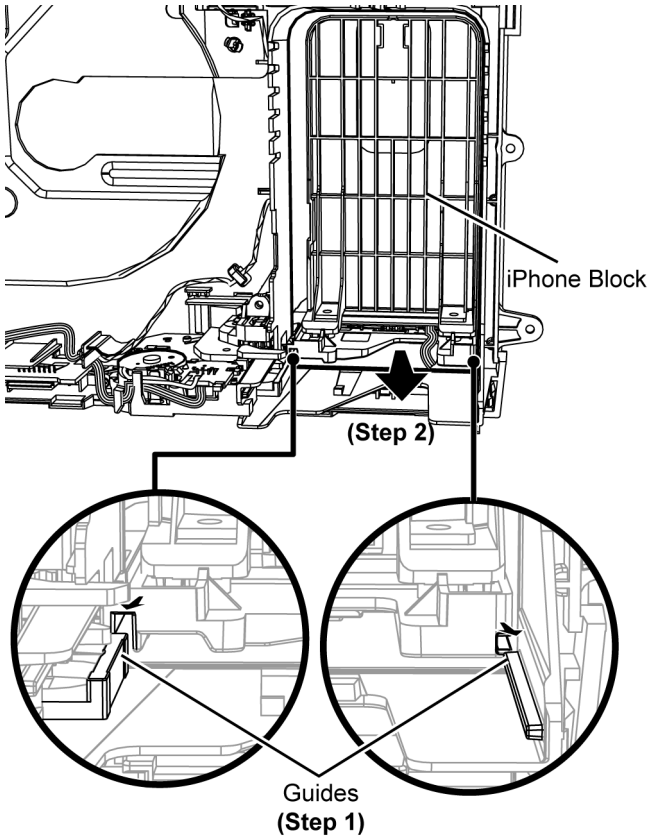

Step 3 : Connect 5P wire at the connector (P945) on the Remote Sensor P.C.B..

Caution : During assembling, dressed the 5P wire into the ribs of the Front Panel Block.

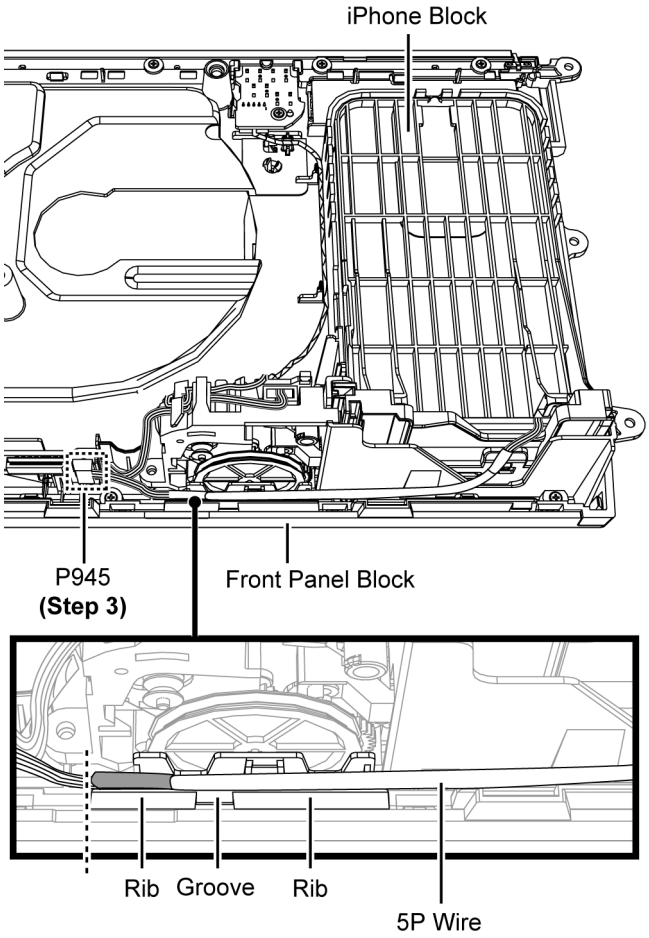

Step 4 : Gently push the Slide Guide Pin upwards. A “click” sound is heard when the Slide Guide Pin is fully catched.

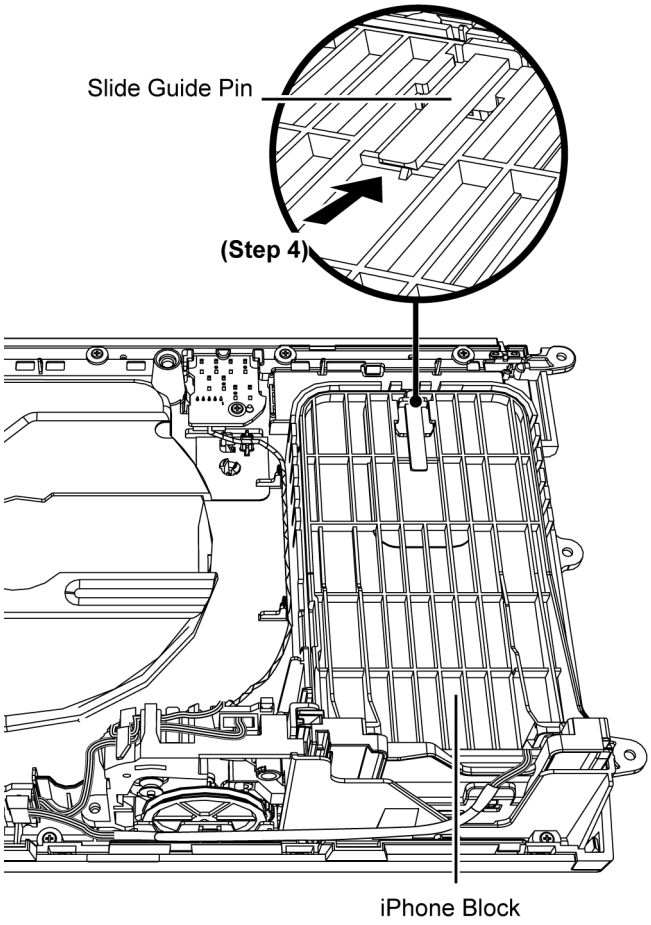

10.8.3. Disassembly of iPhone Support

- Refer to “Disassembly of iPhone Block”

Step 1 : Remove 2 screws.

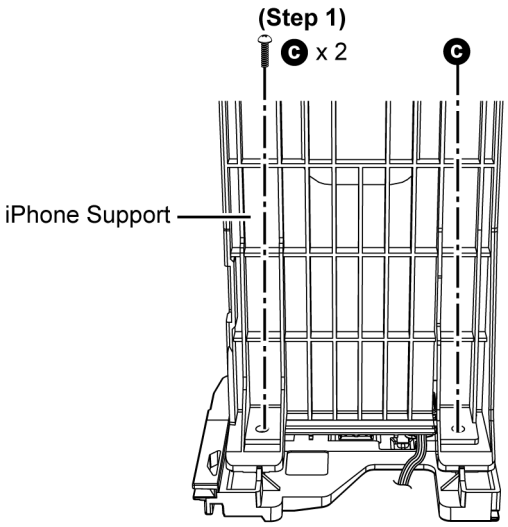

Step 2 : Remove iPhone Support as shown.

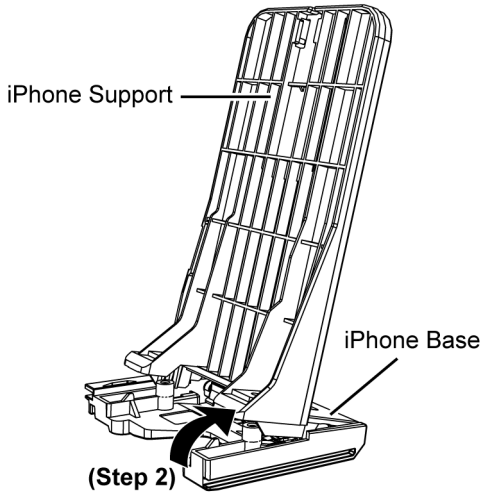

Caution : During assembling, ensure that the iPhone Support is properly catch & fix to the iPhone Base.

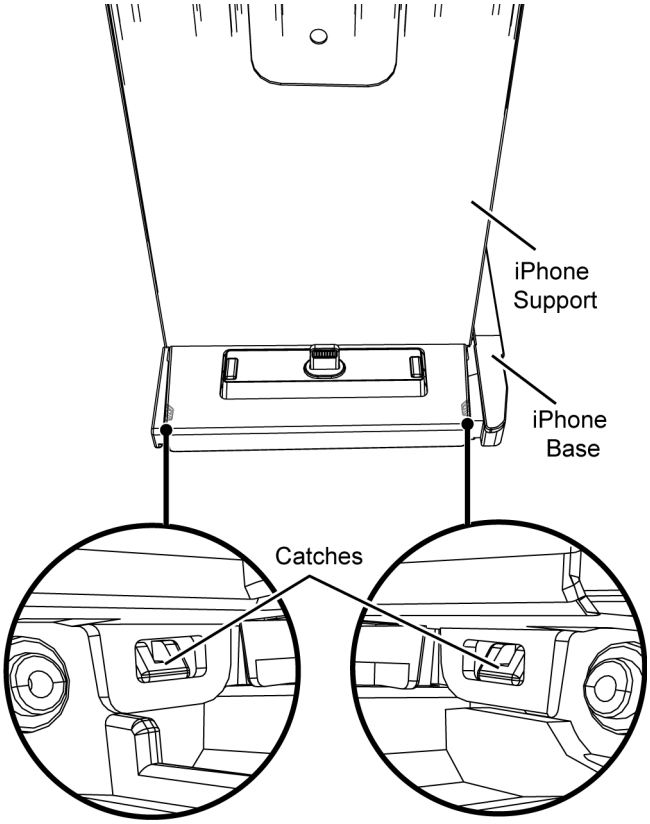

10.8.4. Disassembly of iPhone Base

- Refer to “Disassembly of iPhone Block”
- Refer to “Disassembly of iPhone Support”

Step 1 : Insert a flathead screwdriver below the iPhone Base as shown.
Step 2 : Push outwards and lift up the screwdriver to release the pivot of the iPhone Base.

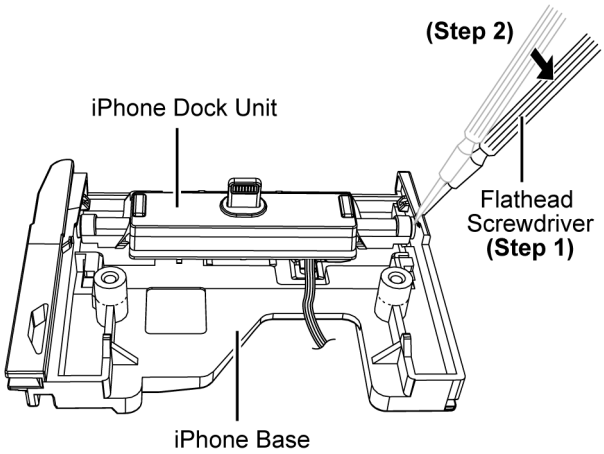

Step 3 : Lift up the iPhone Dock Unit.
Caution : During assembling, A “click” sound is heard when the iPhone Dock Unit is properly fixed.

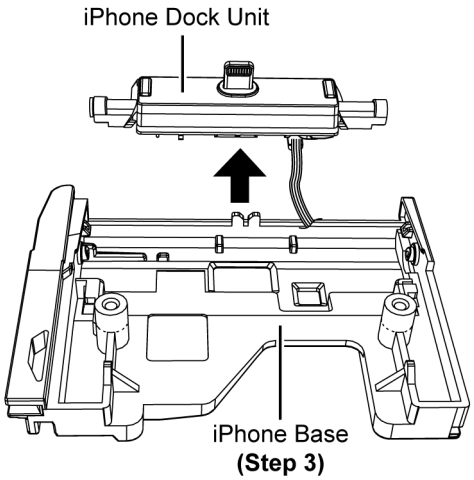

10.8.5. Disassembly of iPhone Support Spring

- Refer to “Disassembly of iPhone Block”
- Refer to “Disassembly of iPhone Support”
- Refer to “Disassembly of iPhone Base”

Step 1 : Release the iPhone Support Spring as shown.
Caution : During assembling, ensure iPhone Support Spring is properly fix under the rib at iPhone Dock.

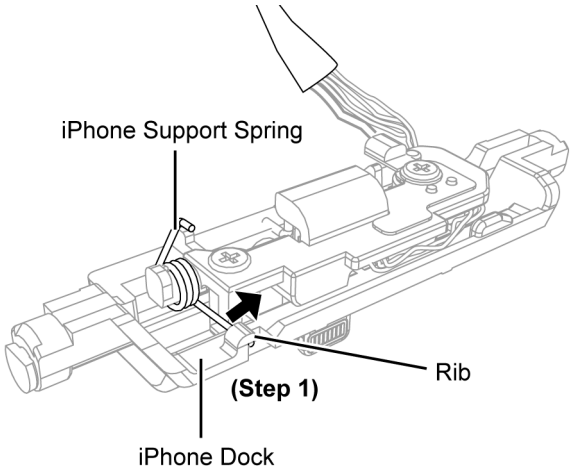

Step 2 : Remove the iPhone Support Spring as shown.
Caution : Keep the iPhone Support Spring in safe place and place them back during assembling.

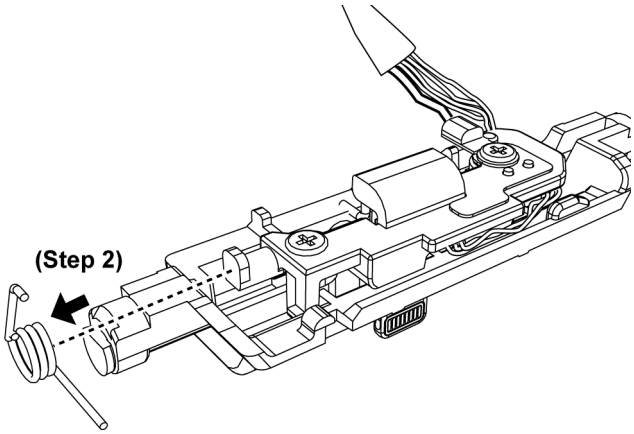

10.8.6. Disassembly of iPhone Dock

- Refer to “Disassembly of iPhone Block”
- Refer to “Disassembly of iPhone Support”
- Refer to “Disassembly of iPhone Base”
- Refer to “Disassembly of iPhone Support Spring”

Step 1 : Remove 2 screws.

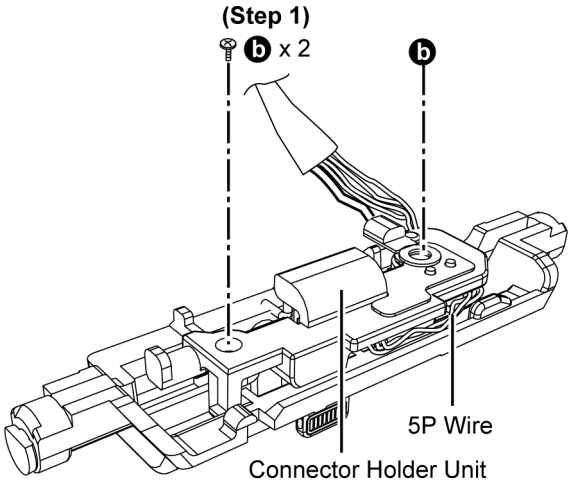

Step 2 : Lift up the Connector Holder Unit.

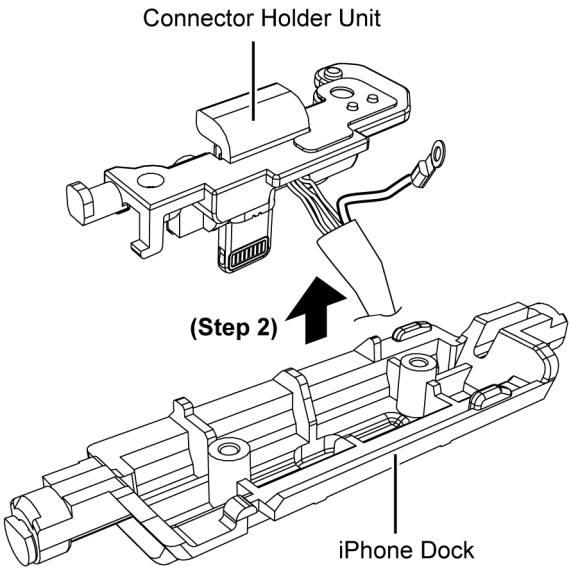

Caution 1 : Dress the 5P wire below Connector Holder Unit as shown.
Caution 2 : During assembling, ensure grounding wire fix correctly & Wire Lug must be straight.

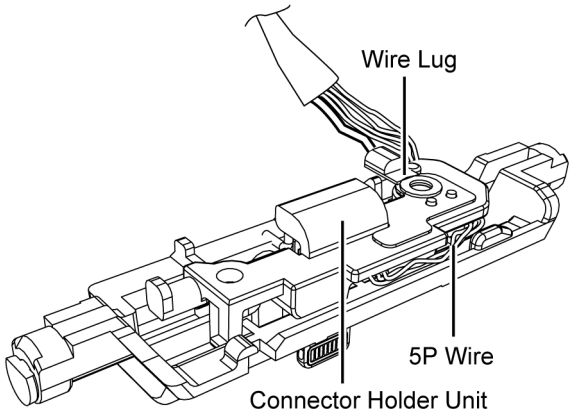

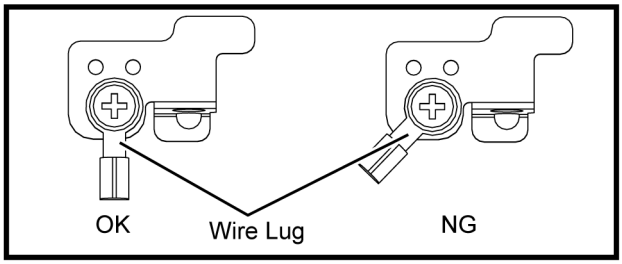

10.8.7. Disassembly of iPhone Connector Unit

- Refer to “Disassembly of iPhone Block”
- Refer to “Disassembly of iPhone Support”
- Refer to “Disassembly of iPhone Base”
- Refer to “Disassembly of iPhone Support Spring”
- Refer to “Disassembly of iPhone Dock”

Step 1 : Remove 2 screws.

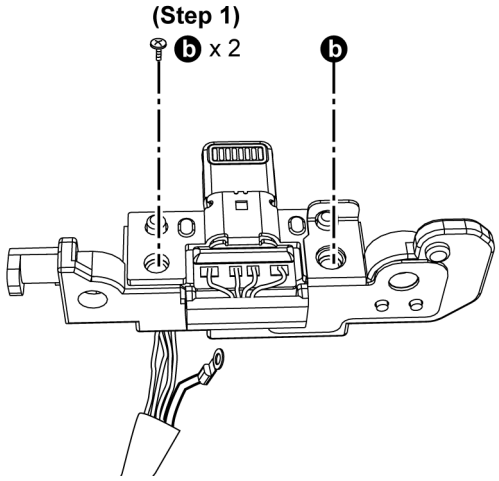

Step 2 : Remove the Shield Plate.

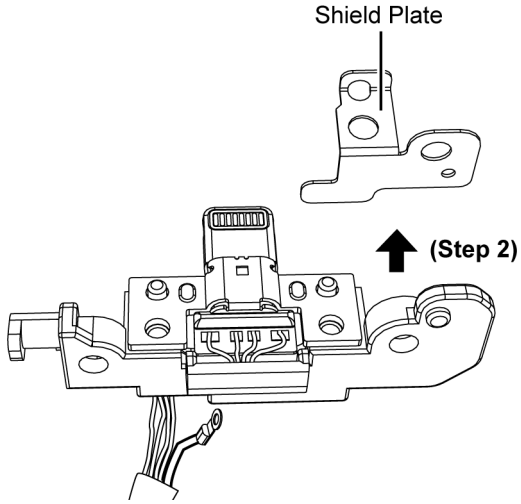

Step 3 : Remove the iPhone Connector Unit.

Caution : During assembling, ensure that the iPhone Connector Unit is properly seated onto the 2 locators.

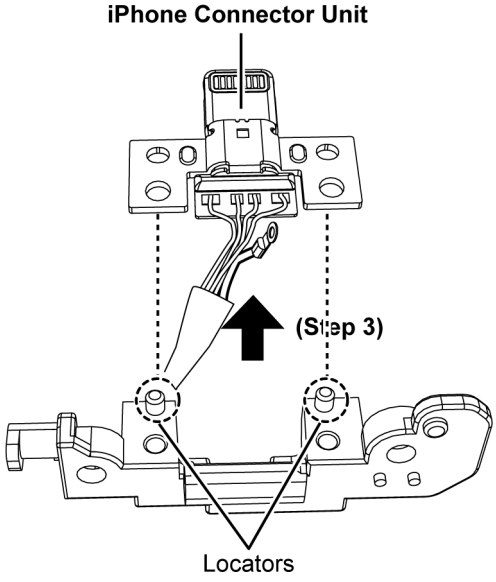

Caution : During assembling, ensure that the 4P wires face outwards as picture shown.

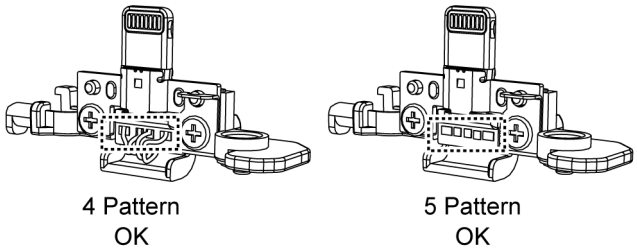

10.9. Disassembly of Interlock Switch P.C.B.

- Refer to “Disassembly of Base Stand Assembly”
- Refer to “Disassembly of Door Assembly”
- Refer to “Disassembly of Front Ornament Unit”
- Refer to “Disassembly of Front Panel Block”

Step 1 : Detach 5P wire at the connector (P941) on the Remote Sensor P.C.B..

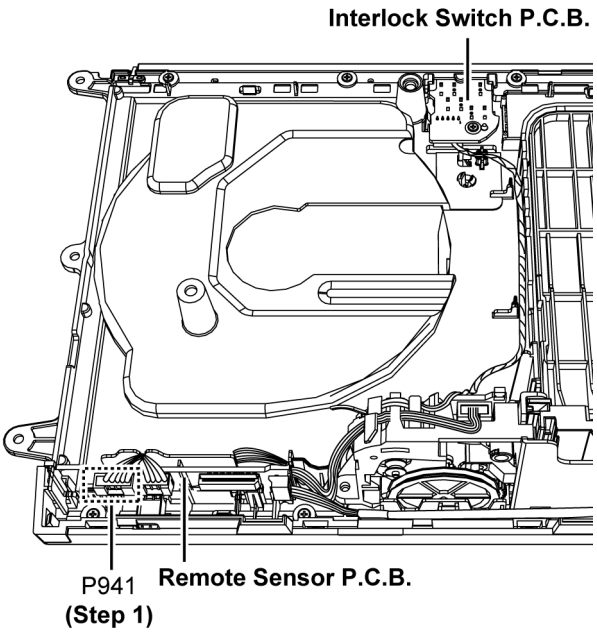

Step 2 : Release the 5P Wire from the slots.

Caution : During assembling, dressed the 5P wire into the slots of the Front Panel Block.

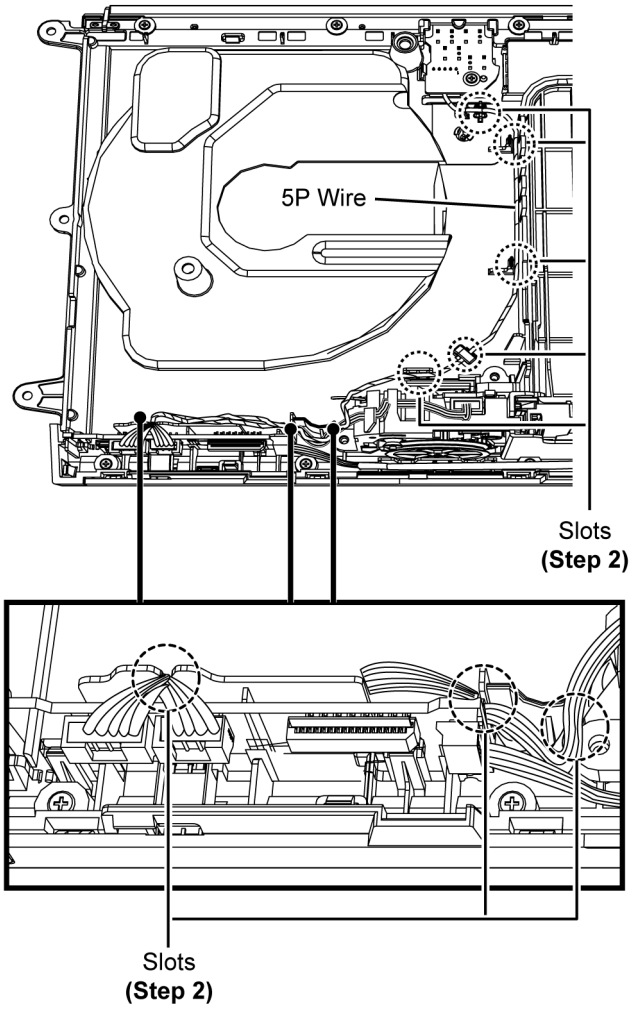

Step 3 : Remove 1 screw.
Step 4 : Release 1 catch.
Step 5 : Lift up the Interlock Switch P.C.B as shown.

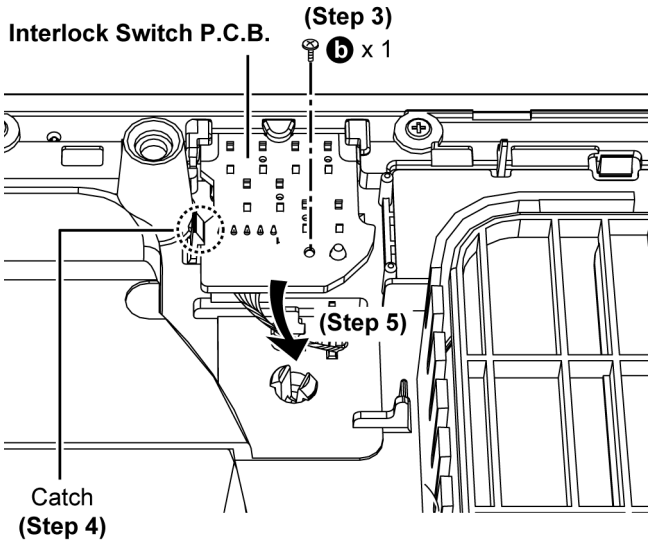

Caution : During assembling, place the Interlock Switch P.C.B. under the rib. Ensure the Interlock Switch P.C.B. is fully catched and properly seated on the locator.

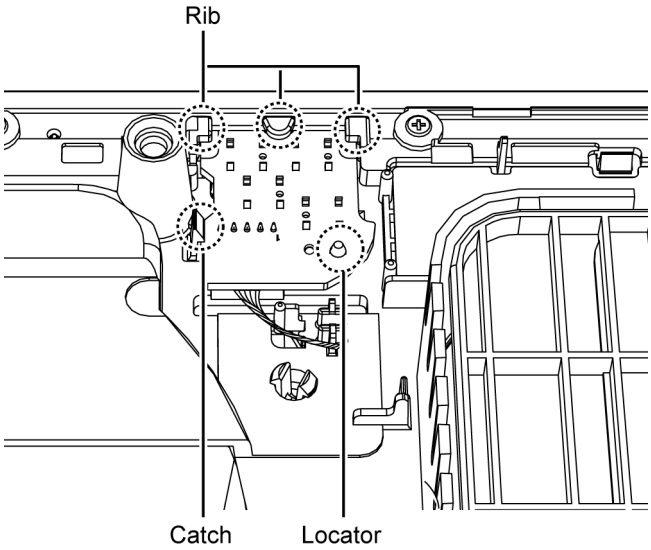

Step 6 : Remove the Interlock Switch P.C.B..

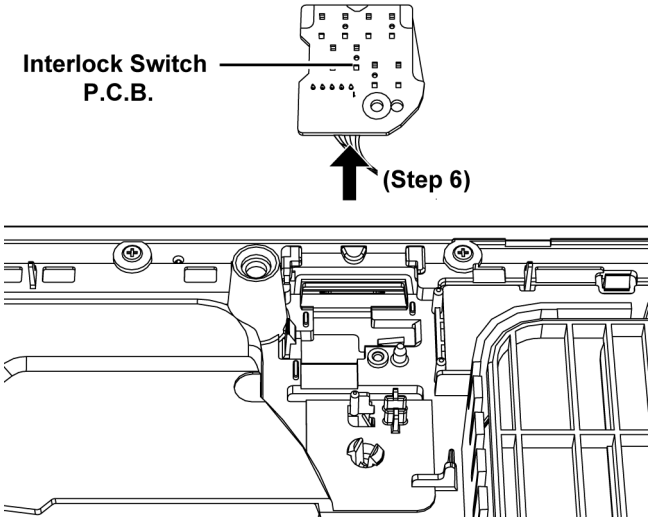

10.10. Disassembly of Remote Sensor P.C.B.

- Refer to “Disassembly of Base Stand Assembly”
- Refer to “Disassembly of Door Assembly”
- Refer to “Disassembly of Front Ornament Unit”
- Refer to “Disassembly of Front Panel Block”

Step 1 : Release the Wires from the slots.

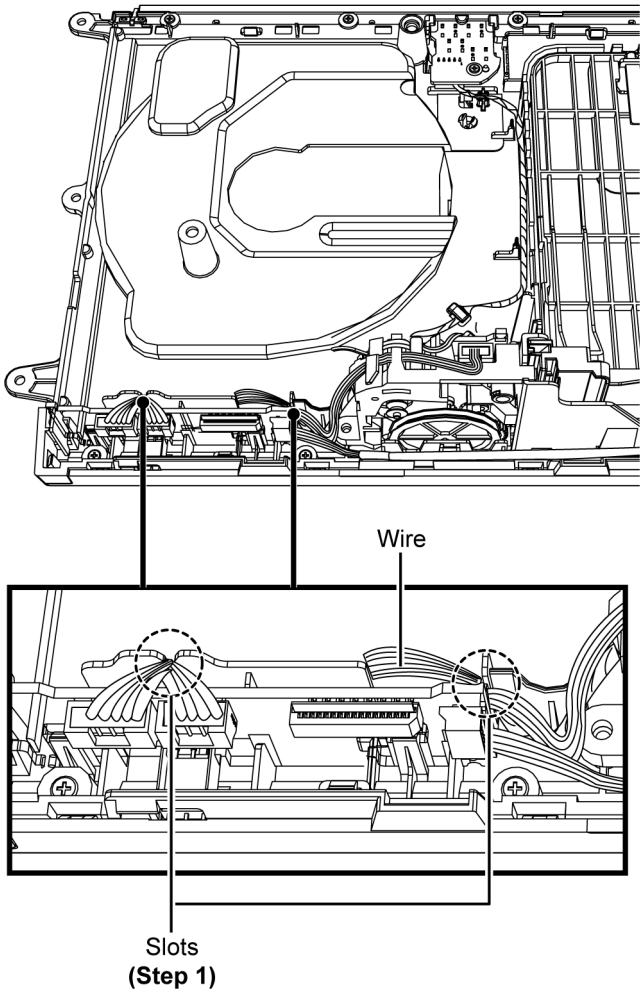

Step 2 : Detach 5P wire at the connector (P941) on the Remote Sensor P.C.B..
Step 3 : Detach 4P wire at the connector (P942) on the Remote Sensor P.C.B..
Step 4 : Detach 5P wire at the connector (P945) on the Remote Sensor P.C.B..

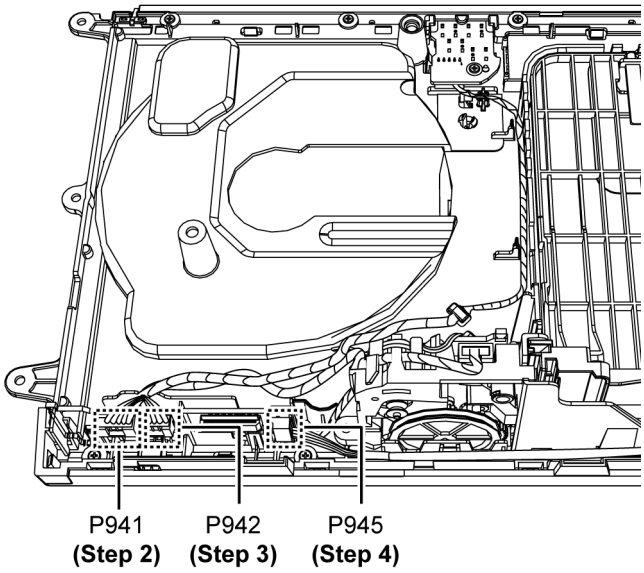

Caution : During assembling, dressed the 4P & 5P wires into the slots respectively.

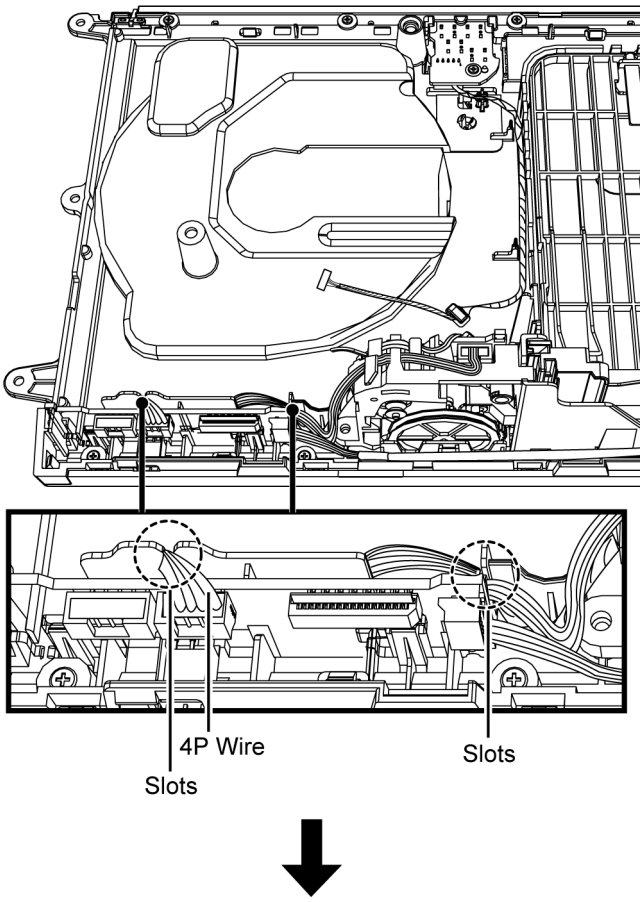

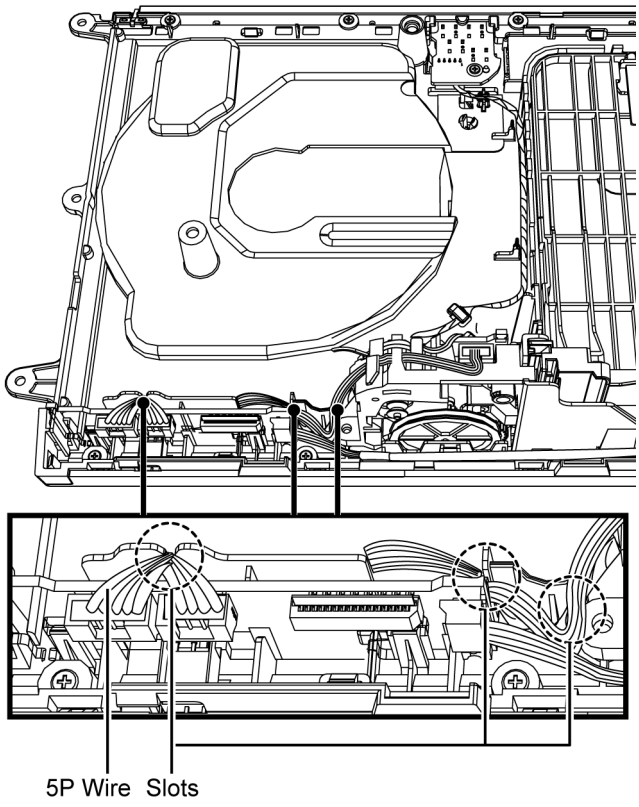

Step 4 : Use a Screwdriver to release 2 catches.
Step 5 : Lift up & remove the Remote Sensor P.C.B..

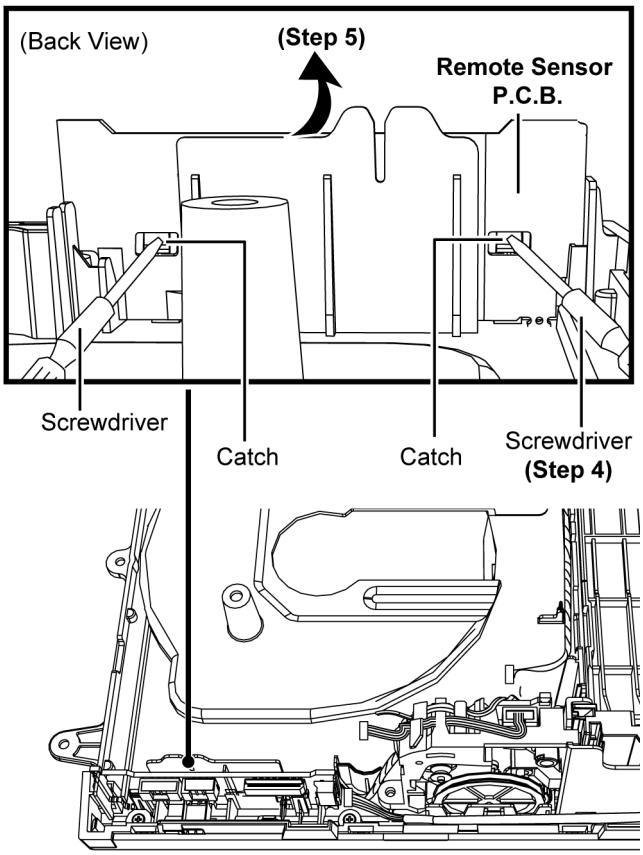

Caution : During assembling, align the Remote Sensor P.C.B. (with white masking) facing outwards & inserted into the Front Panel Block.

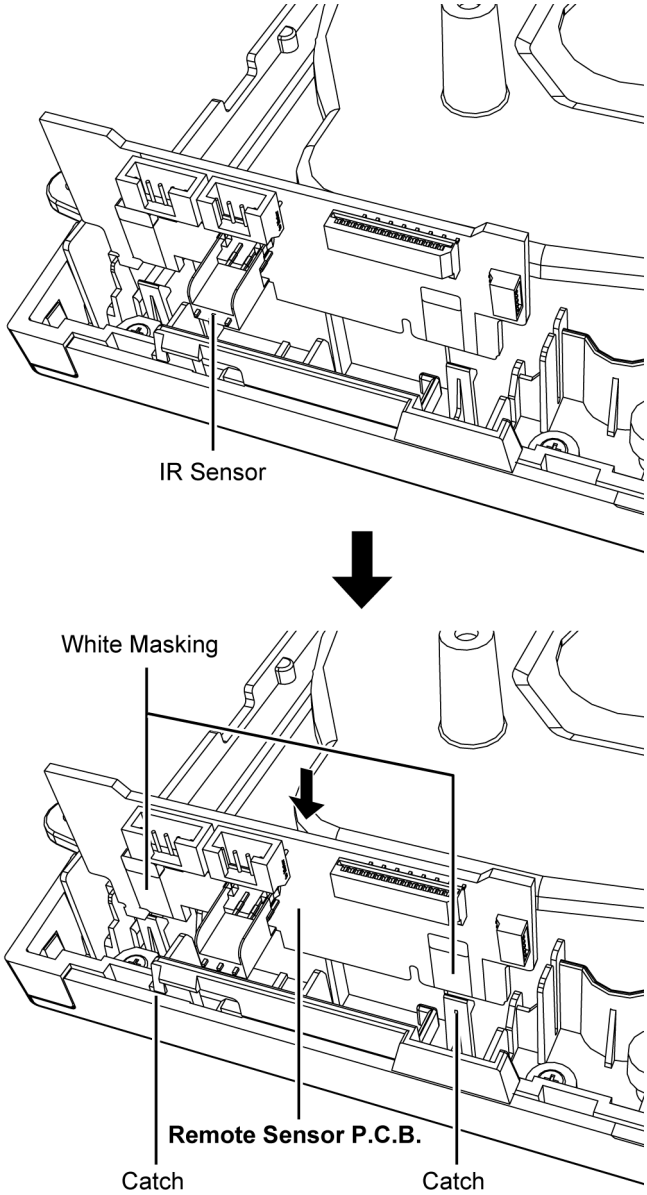

Caution : During assembling, ensure the Remote Sensor P.C.B. is seated properly and fully catched.

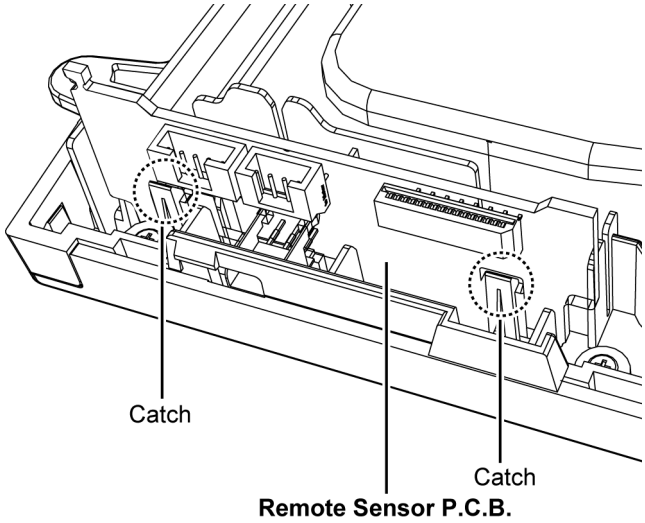

10.11. Replacement of Gear Box Assembly

- Refer to “Disassembly of Base Stand Assembly”
- Refer to “Disassembly of Door Assembly”
- Refer to “Disassembly of Front Ornament Unit”
- Refer to “Disassembly of Front Panel Block”
- Refer to “Disassembly of iPhone Block”

10.11.1. Disassembly of Gear Box Assembly

Step 1 : Remove 2 screws.

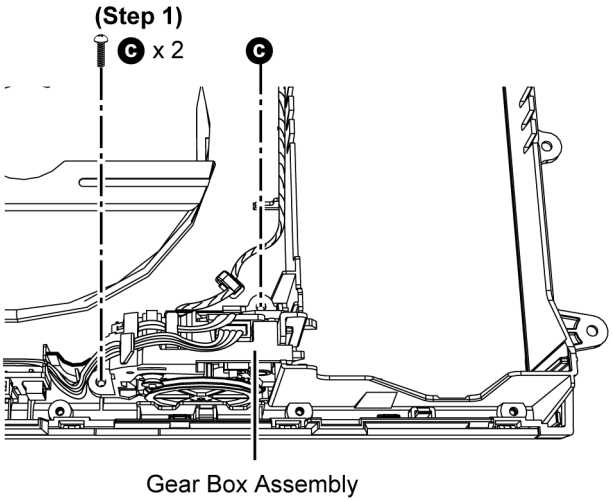

Step 2 : Release the 4P Wire from the slot.

Step 3 : Detach 4P wire at the connector (CN931) on the Motor P.C.B..

Caution : During assembling, dressed the 4P wire into the slot.

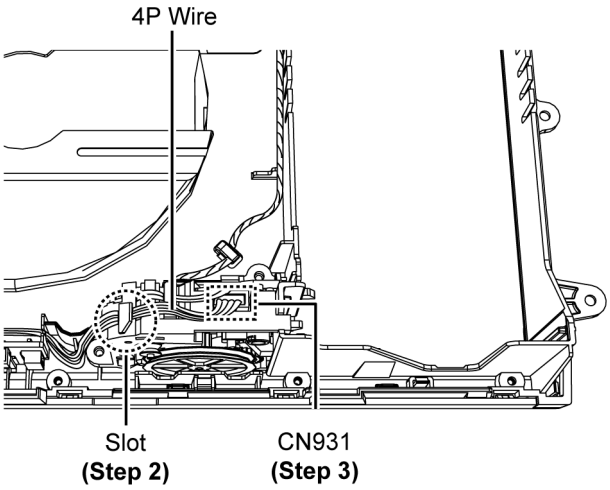

Step 4 : Remove the Gear Box Assembly as shown.

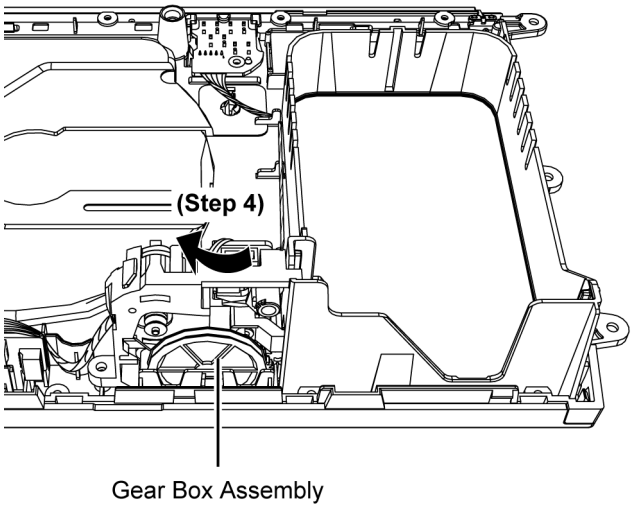

10.11.2. Assembly of Gear Box Assembly

Step 1 : Align the catch of the Gear Box Assembly with the guide on the Front Panel Block as shown.

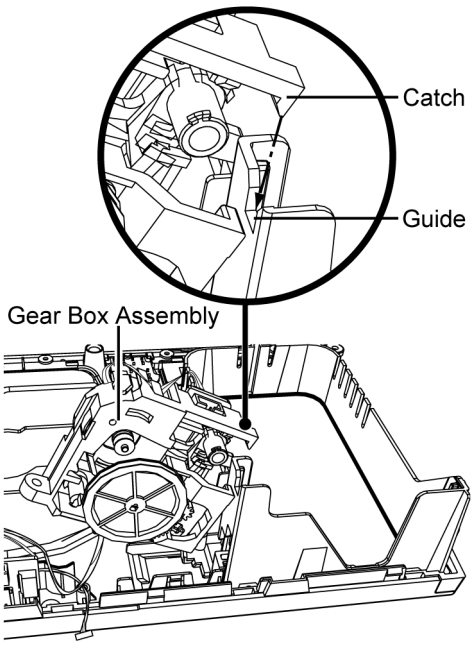

Step 2 : Slighly insert the Gear Box Assembly into the Front Panel Block as shown.

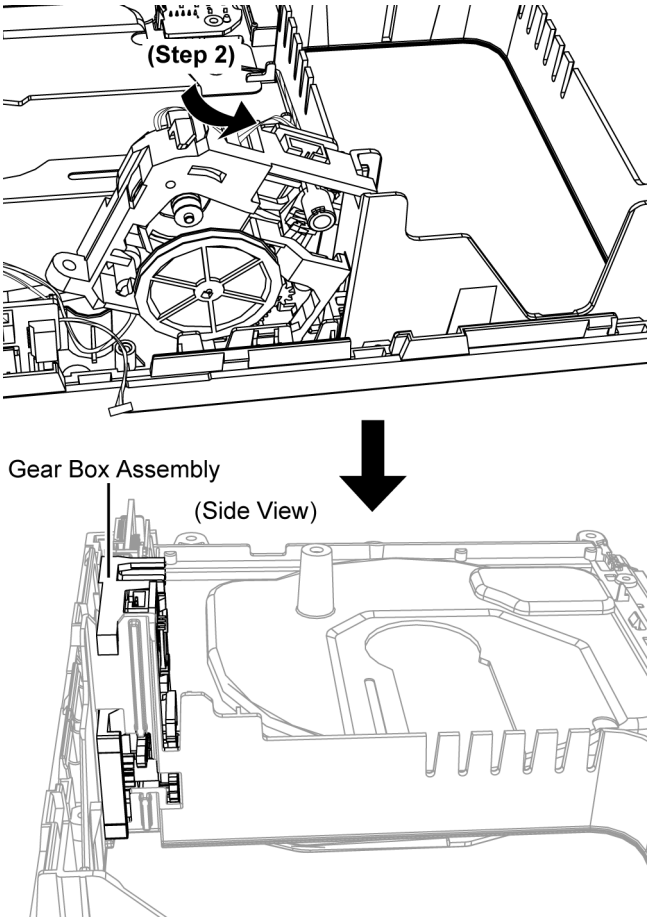

Step 3 : Connect 4P wire at the connector (CN931) on the Motor P.C.B..

Step 4 : Dress the 4P Wire into the slot.

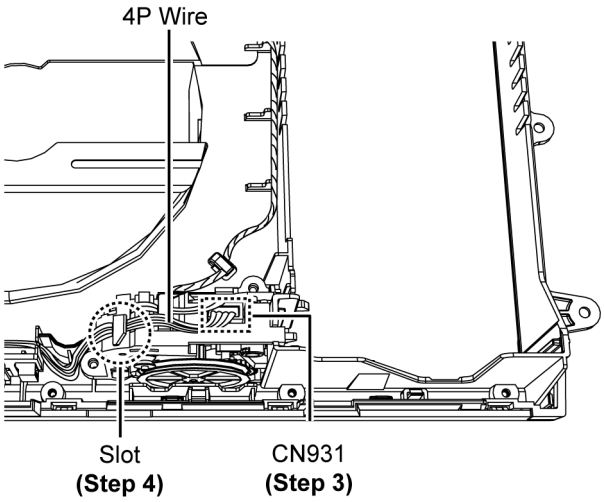

Step 5 : Fix 2 screws.

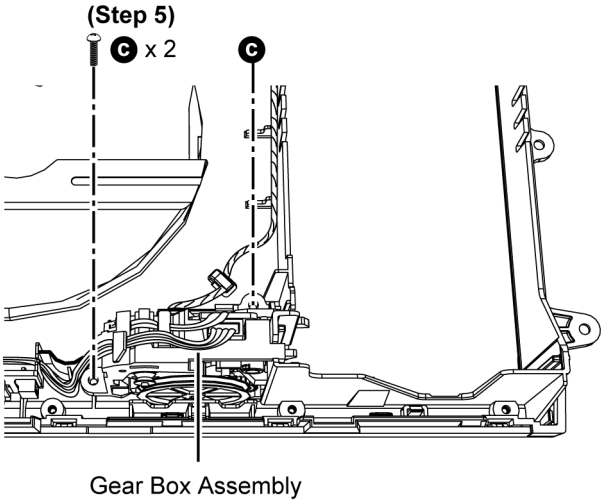

10.12. Disassembly of Motor P.C.B.

- Refer to “Disassembly of Gear Box Assembly”

Step 1 : Release 1 catch.
Step 2 : Remove the Motor P.C.B..

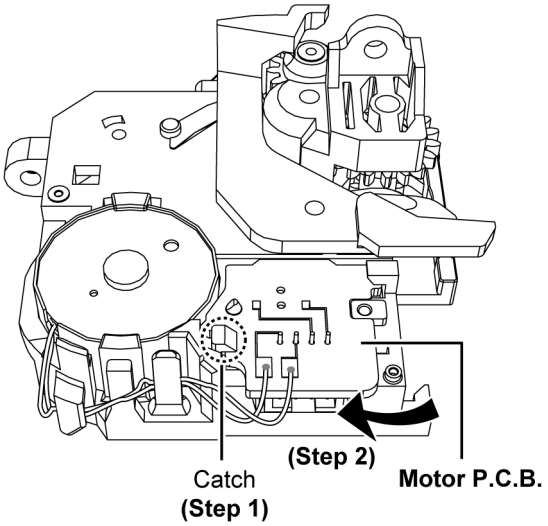

Caution 1 : During assembling, insert the Motor P.C.B. underneath the rib.
Caution 2 : During assembling, ensure the Motor P.C.B. is fully catched and seated on the locator.

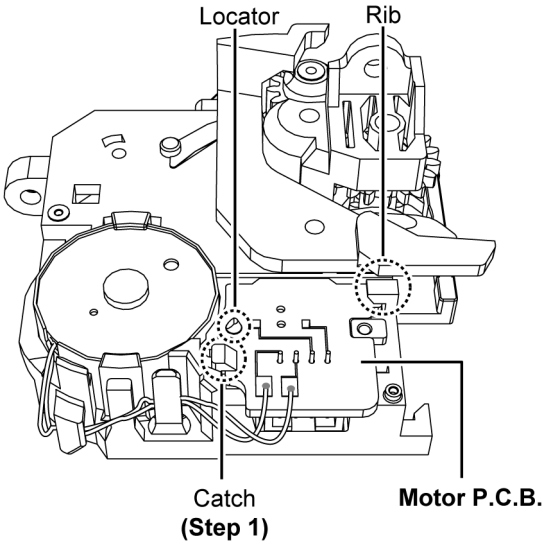

Step 3 : Release the 2P Wire from the slots.
Caution : During assembling, dressed the 2P wire into the slots.

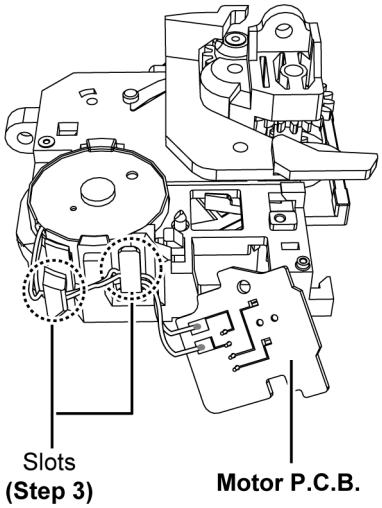

Step 4 : Desolder pins on the solder side of the Motor P.C.B. and remove the Motor P.C.B..

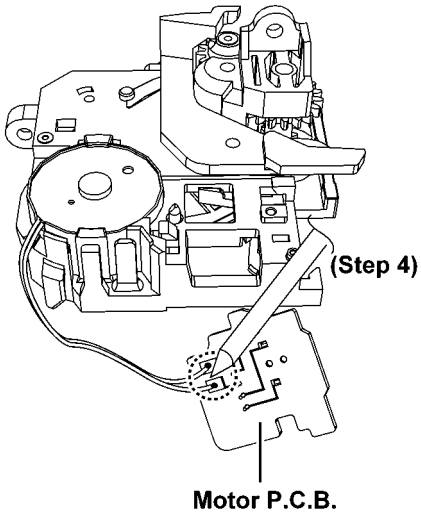

10.13. Disassembly of Belt & Pulley Gear

- Refer to “Disassembly of Gear Box Assembly”

Step 1 : Remove the Belt.

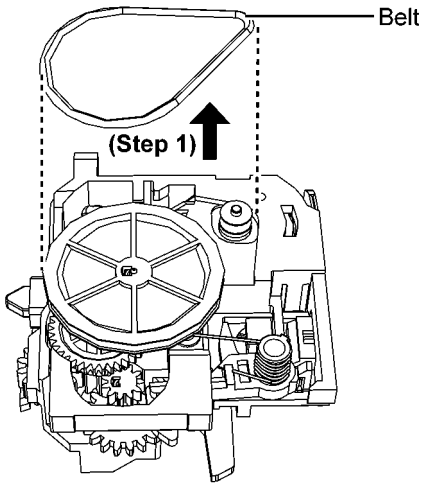

Step 2 : Remove the Pulley Gear.

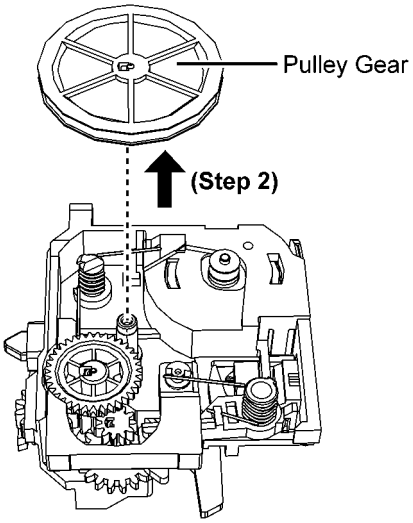

10.14. Disassembly of Motor Assembly

- Refer to “Disassembly of Gear Box Assembly”
- Refer to “Disassembly of Motor P.C.B.”
- Refer to (Step 1) of item 10.13.

Step 1 : Release 2 catches.

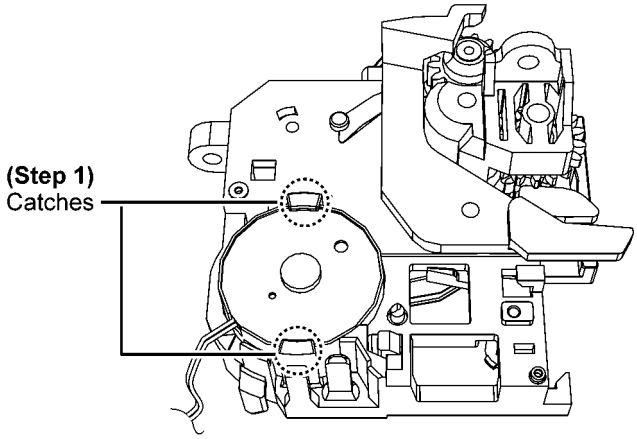

Step 2 : Remove the Motor Assembly.

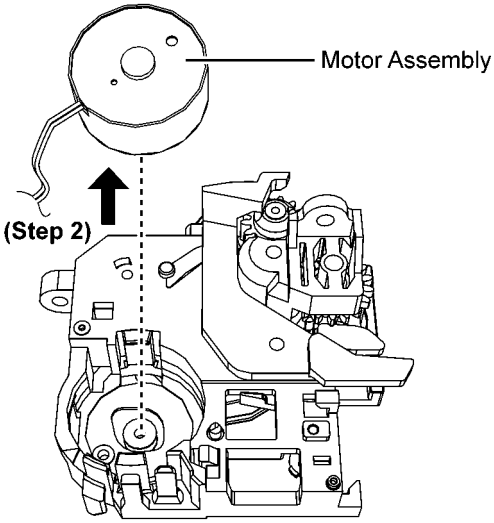

Caution 1 : During assembling, position & align the Motor wire with the indicated arrow on the Gear Box Assembly.
Caution 2 : During assembling, ensure the Motor Assembly is fully catched & seated properly.

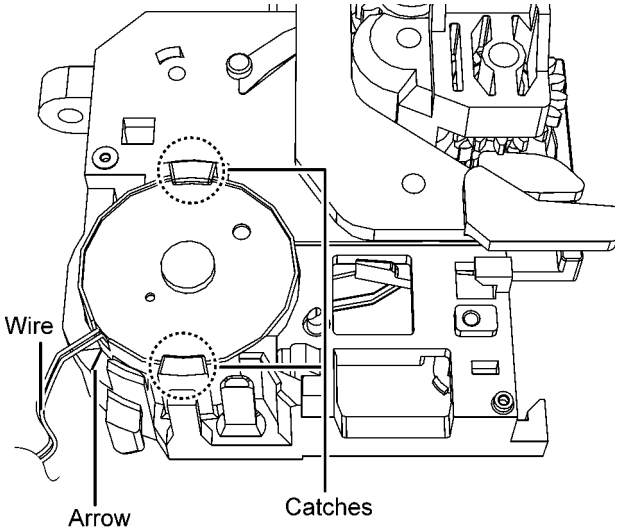

10.15. Disassembly of Centering Spring & Centering Stopper

- Refer to “Disassembly of Gear Box Assembly”
- Refer to “Disassembly of Belt & Pulley Gear”

Step 1 : Release the Centering Spring as shown.

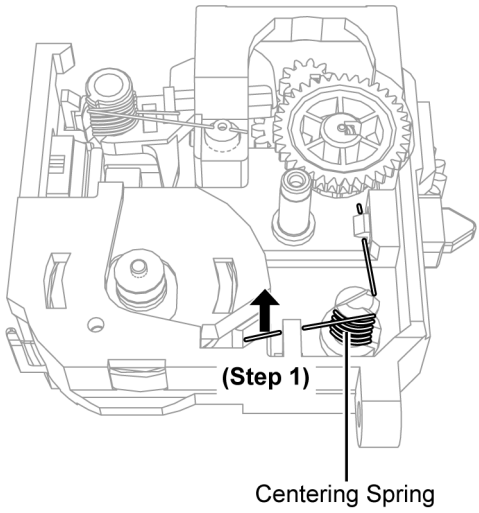

Caution : During assembling, placed the Centering Spring underneath the rib of the Centering Stopper.

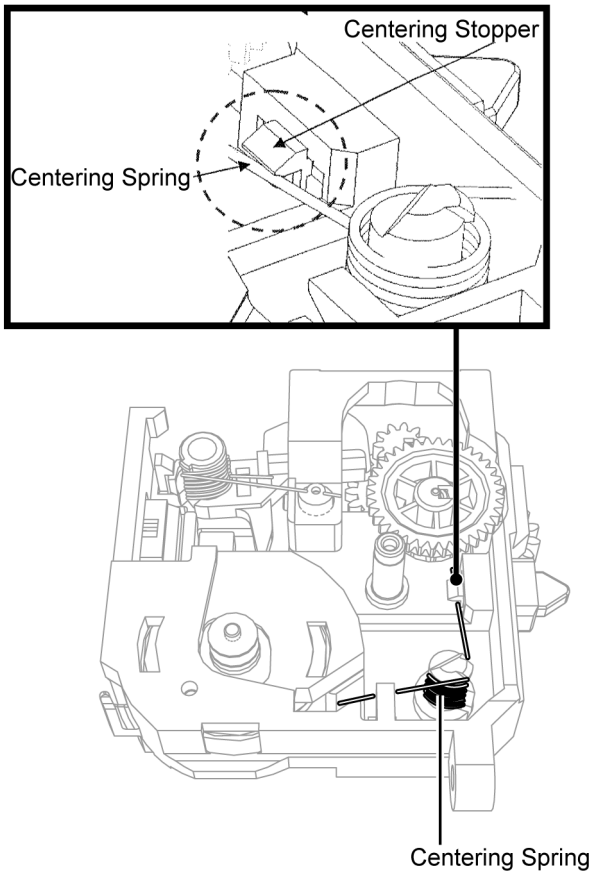

Caution : During assembling, placed the Centering Spring underneath the hook of the gear box assembly.

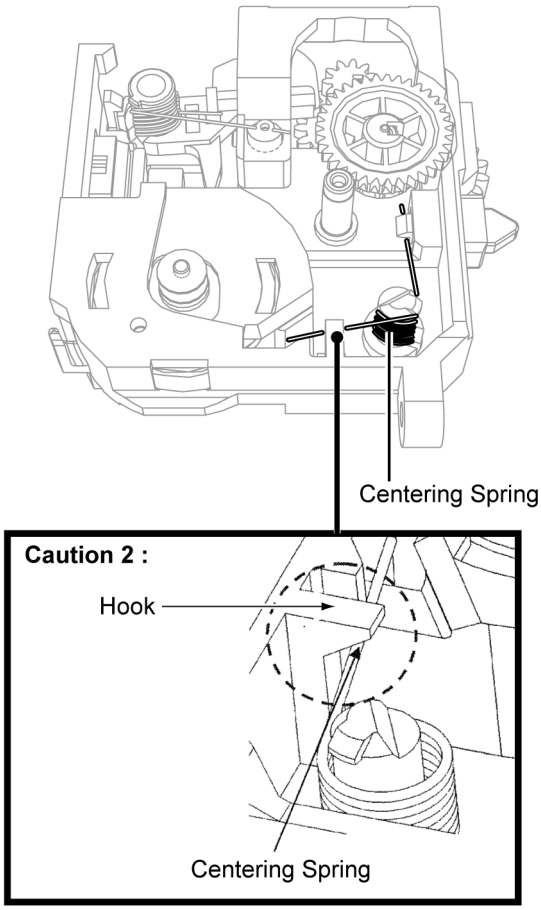

Step 2 : Remove the Centering Spring.

Caution : Keep the Centering Spring in safe place and place them back during assembling.

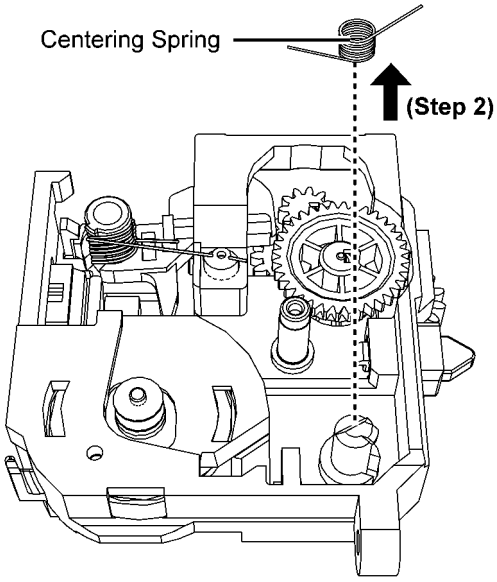

Step 3 : Press to release 1 catch as shown.

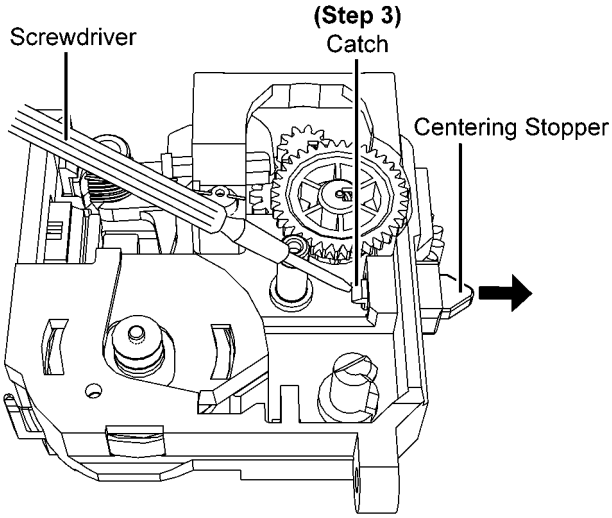

Step 4 : Remove the Centering Stopper.

Caution : During assembling, insert the Centering Stopper with flat surface facing upwards as shown below. A "click" sound will be heard when it its properly catched.

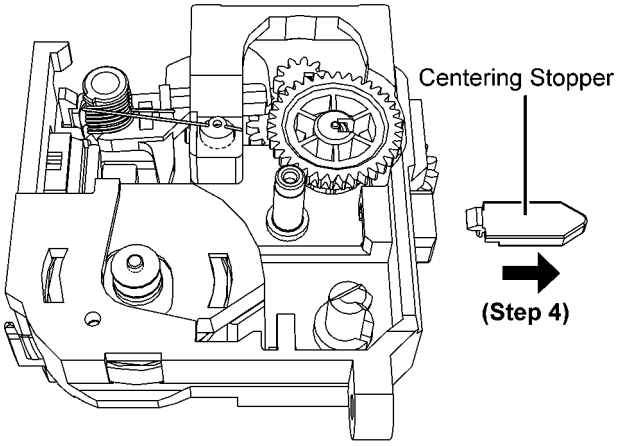

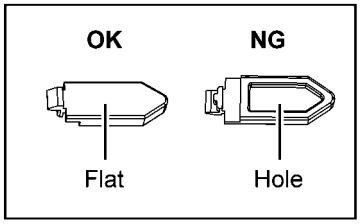

10.16. Disassembly of Lever Spring, Trigger Lever & Driver Gear A

- Refer to “Disassembly of Gear Box Assembly”
- Refer to “Disassembly of Belt & Pulley Gear”

Step 1 : Release the Lever Spring as shown.

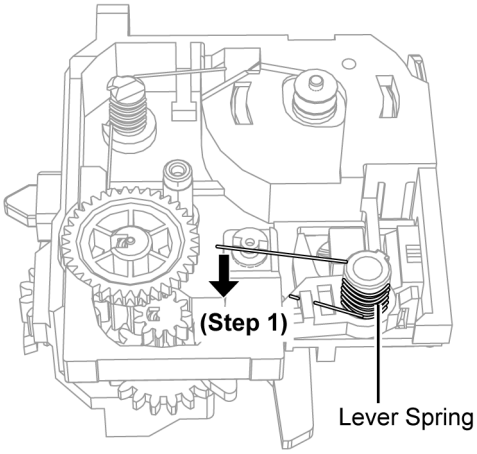

Caution : During assembling, placed the Lever Spring underneath Trigger Lever Hook.

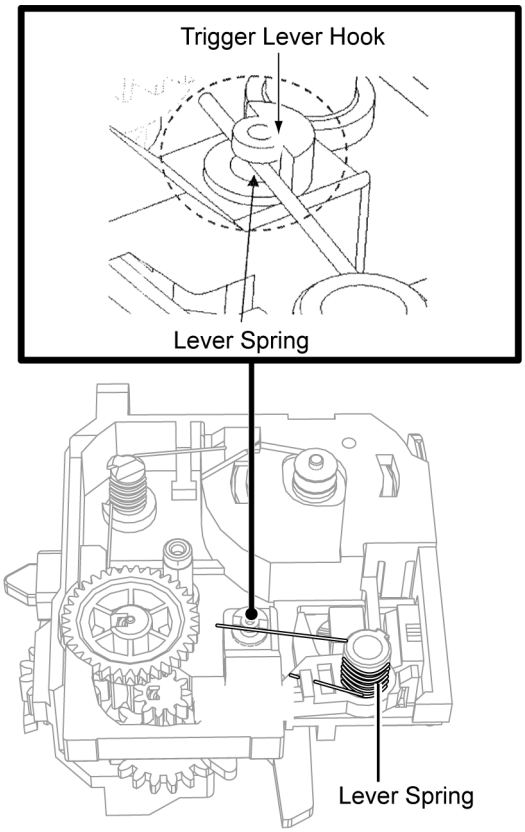

Caution : During assembling, placed the Lever Spring underneath SW Lever Hook.

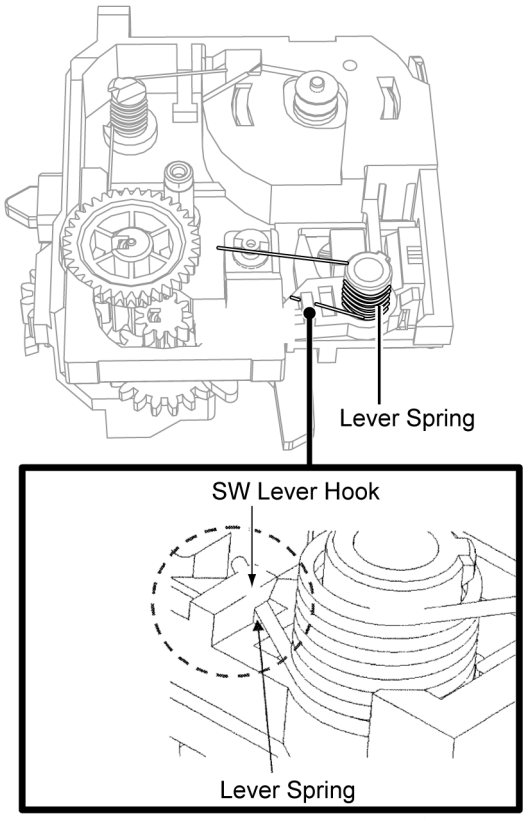

Step 2 : Remove the Lever Spring.

Caution : Keep the Lever Spring in safe place and place them back during assembling.

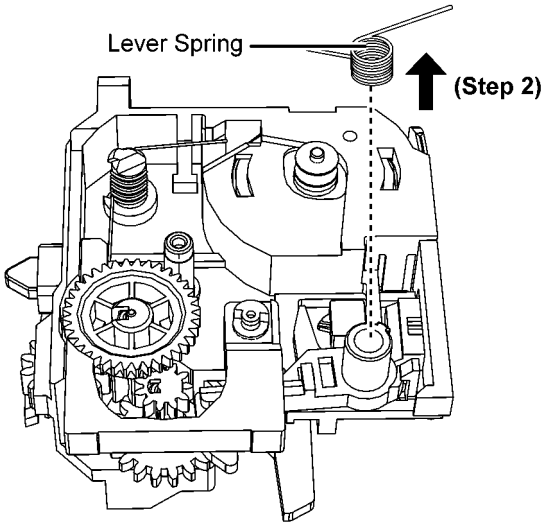

Step 3 : Upset the Gear Box Assembly.
Step 4 : Remove the Trigger Lever.

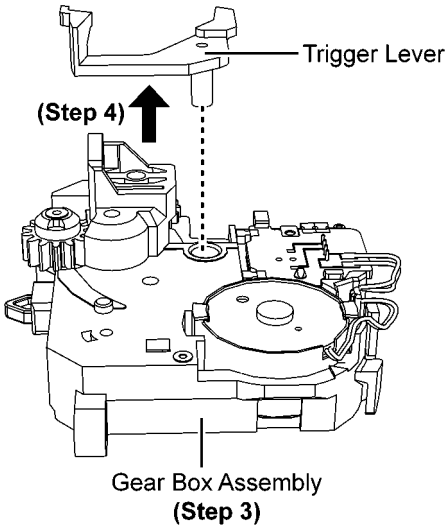

Step 5 : Remove the Driver Gear A.

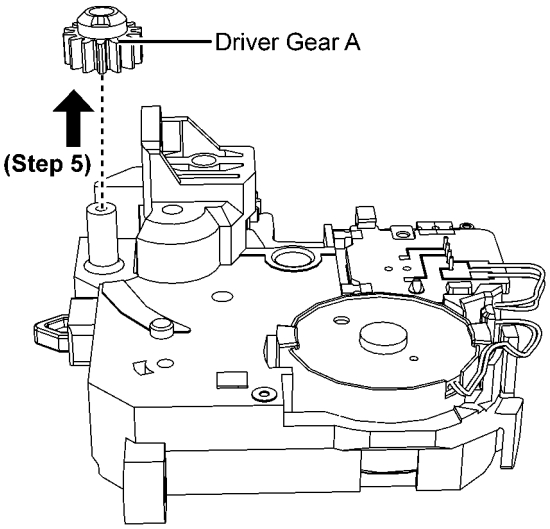

10.17. Disassembly of SW Lever, Relay Gear & Driver Gear B

- Refer to “Disassembly of Gear Box Assembly”
- Refer to “Disassembly of Belt & Pulley Gear”
- Refer to “Disassembly of Lever Spring, Trigger Lever & Driver Gear A”

Step 1 : Release 1 catch as shown.
Step 2 : Lift up the SW Lever as shown.

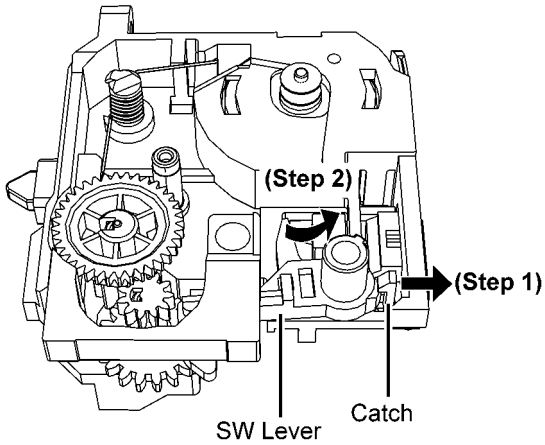

Step 3 : Remove the SW Lever.

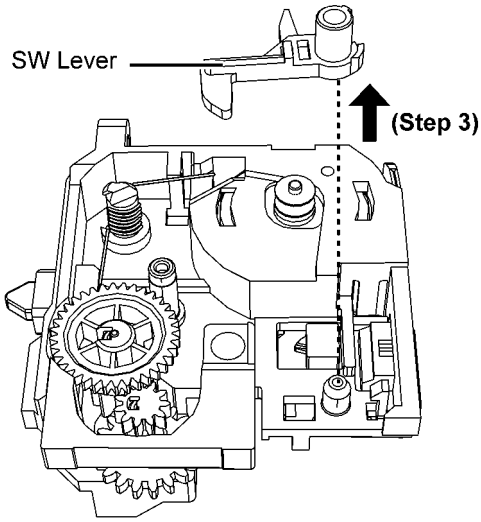

Caution : During assembling, a “click” sound could be heard when the SW Lever is fully catched.

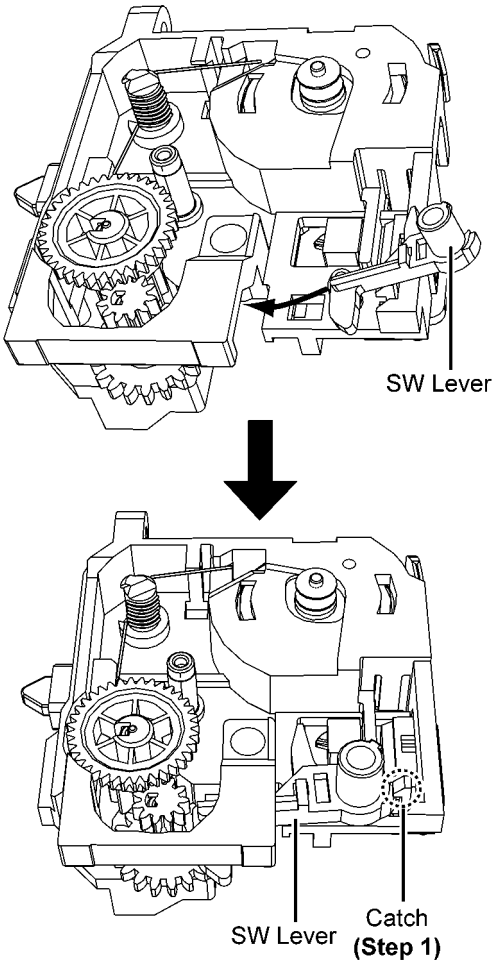

Step 4 : Remove the Relay Gear.

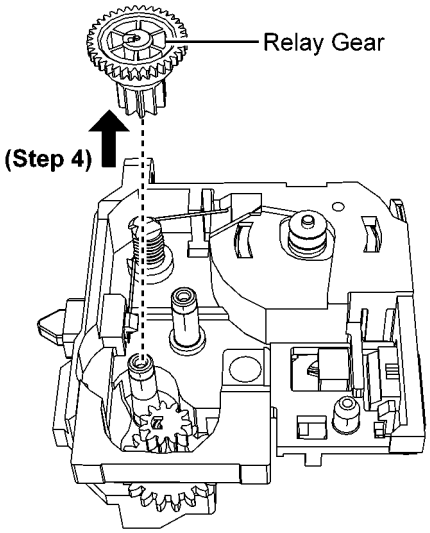

Step 5 : Remove the Driver Gear B.

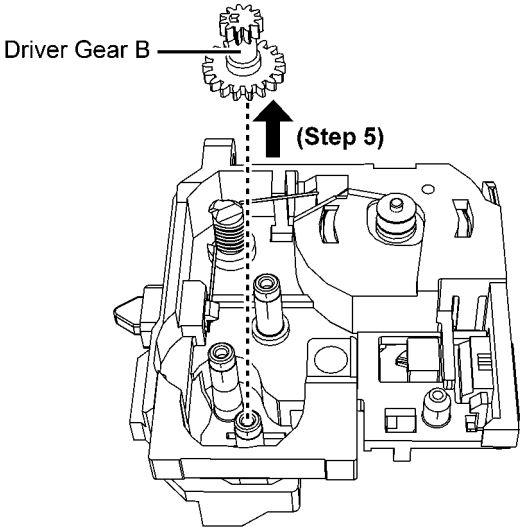

10.18. Disassembly of Shutter & Shutter Spring

- Refer to “Disassembly of Base Stand Assembly”
- Refer to “Disassembly of Door Assembly”
- Refer to “Disassembly of Front Ornament Unit”
- Refer to “Disassembly of Front Panel Block”

Step 1 : Press the catches inwards and push the Shutter downwards in order of sequences (1) to (2).

Caution : During assembling, ensure the Shutter is fully catched.

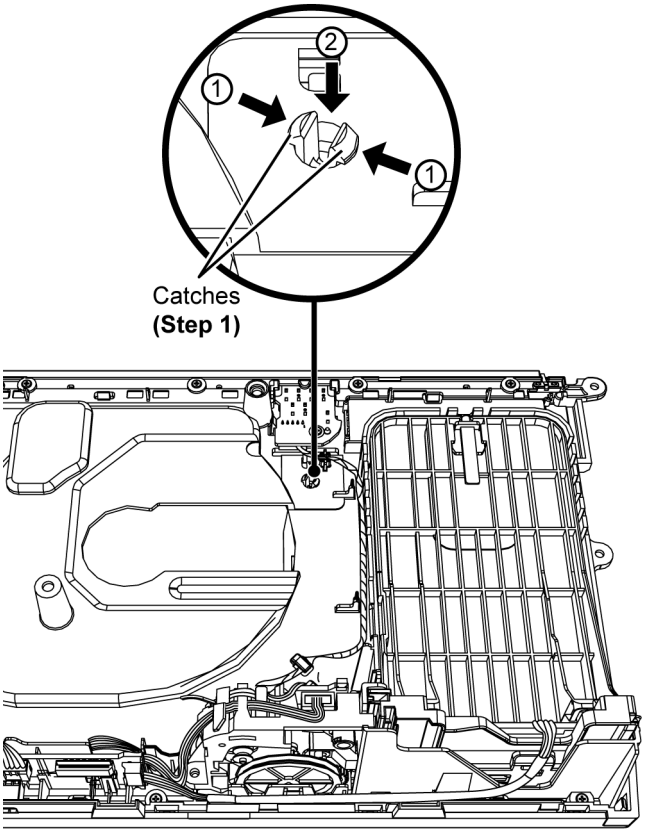

Step 2 : Upset the Front Panel Block.

Step 3 : Remove the Shutter & Shutter Spring.

Caution : Keep the Shutter Spring in safe place and place them back during assembling.

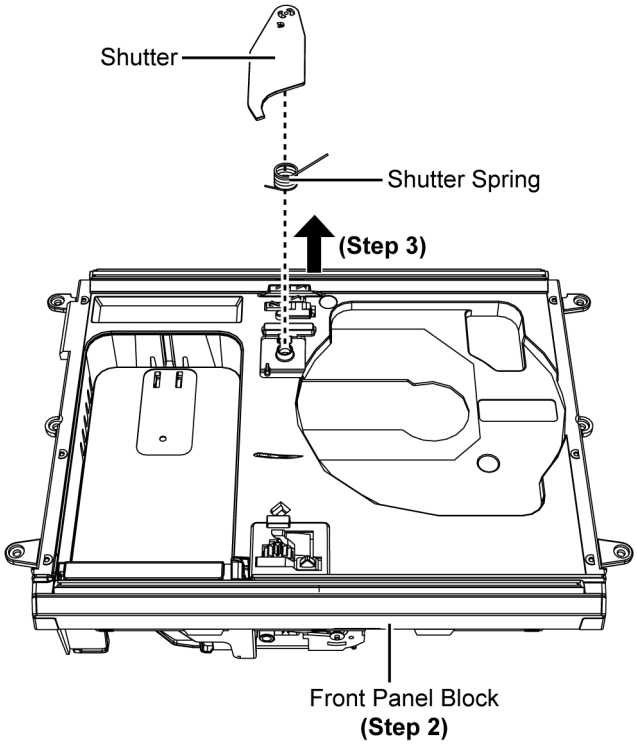

10.19. Disassembly of Upper Guide Rail & Top Ornament

- Refer to “Disassembly of Base Stand Assembly”
- Refer to “Disassembly of Door Assembly”
- Refer to “Disassembly of Front Ornament Unit”
- Refer to “Disassembly of Front Panel Block”

Step 1 : Lift up & remove the Lighting Pieces as show.

Caution : Keep the Lighting Pieces in safe place and place them back during assembling.

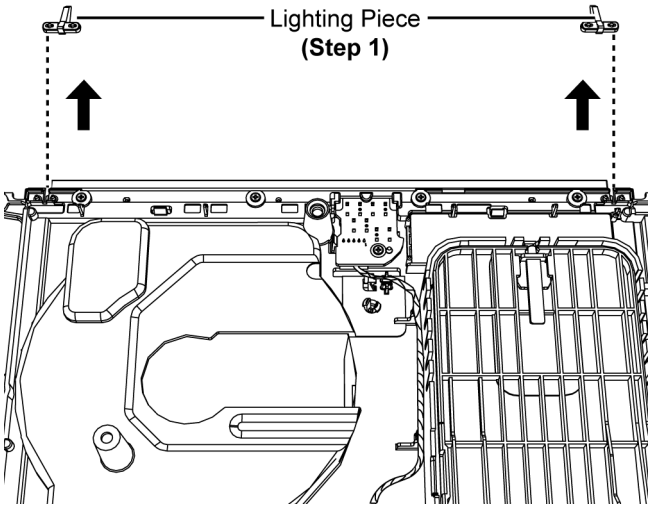

Step 2 : Remove 4 screws.

Step 3 : Release 3 catches.

Caution : During assembling, ensure the Upper Guide Rail is fully catched to the Front Panel Block.

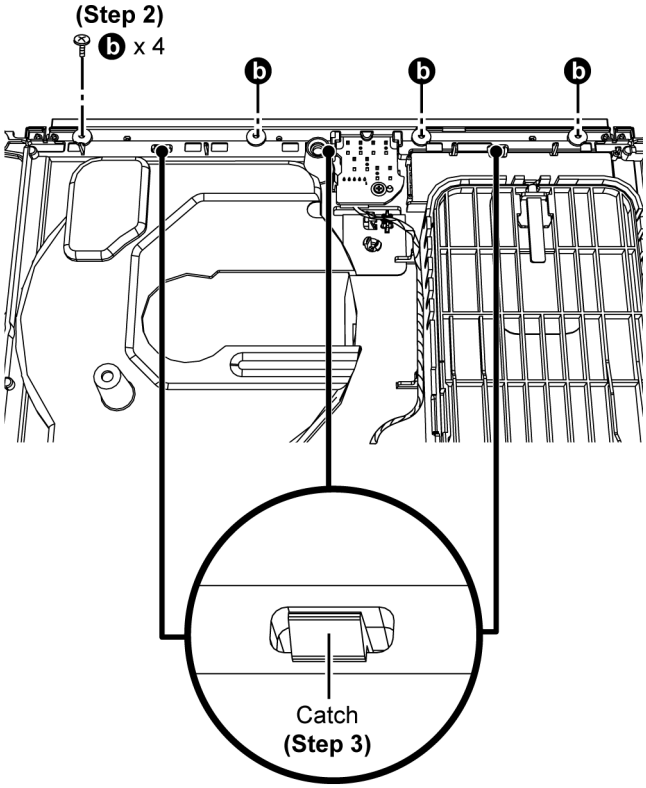

Step 4 : Remove the Upper Guide Rail & the Top Ornament.

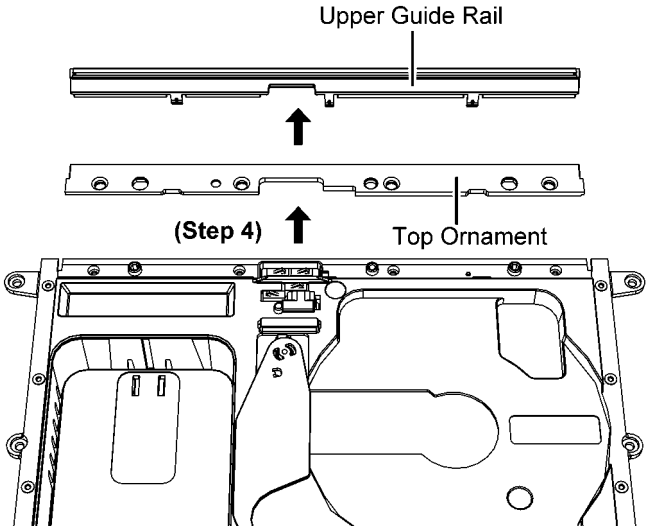

10.20. Disassembly of Bottom Ornament

- Refer to “Disassembly of Base Stand Assembly”
- Refer to “Disassembly of Door Assembly”
- Refer to “Disassembly of Front Ornament Unit”
- Refer to “Disassembly of Front Panel Block”

Step 1 : Release two catches & guide by sequence (1) to (6) as shown.

Caution : During assembling, ensure the Bottom Ornament is fully catched to the Front Panel Block.

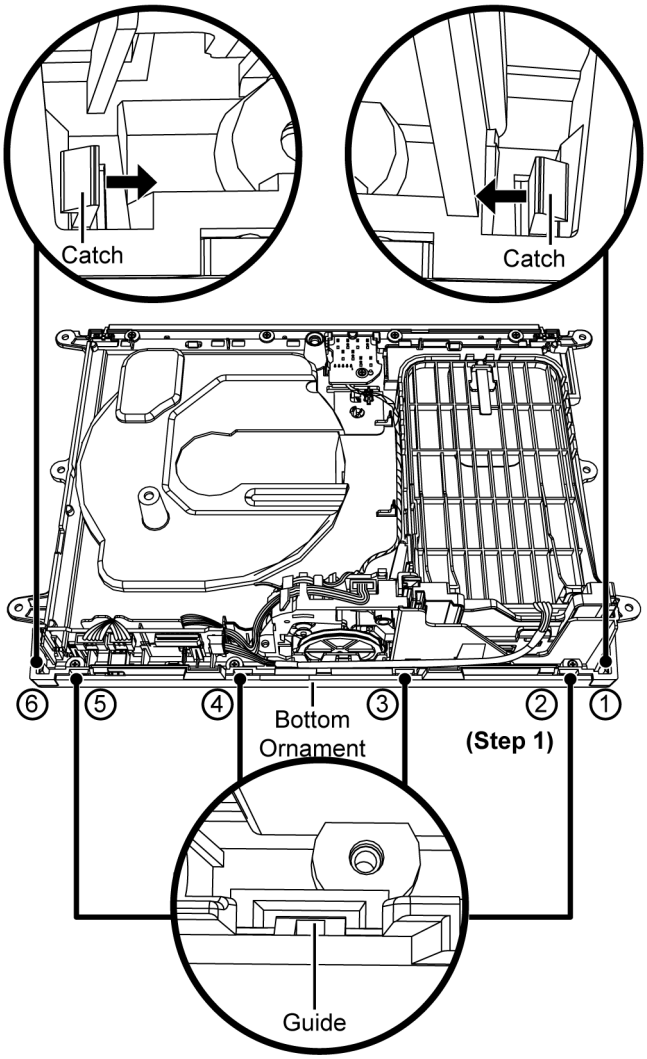

Step 2 : Remove the Bottom Ornament.

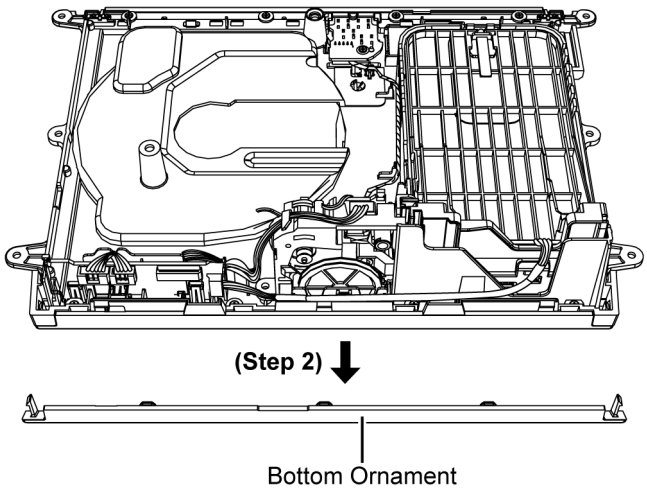

10.21. Disassembly of Lower Guide Rail

- Refer to “Disassembly of Base Stand Assembly”
- Refer to “Disassembly of Door Assembly”
- Refer to “Disassembly of Front Ornament Unit”
- Refer to “Disassembly of Front Panel Block”
- Refer to “Disassembly of Bottom Ornament”

Step 1 : Release the 5P Wire from the groove.

Caution : During assembling, dressed the 5P wire into the ribs of the Front Panel Block.

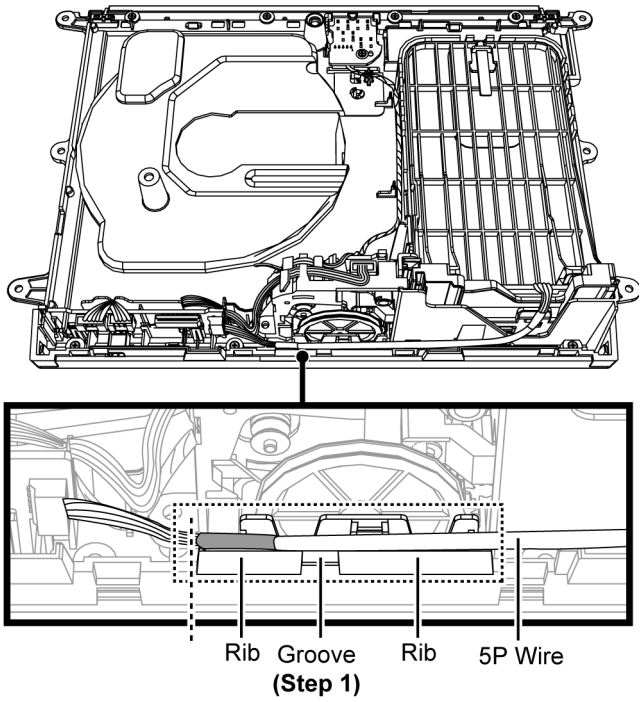

Step 2 : Remove 4 screws.

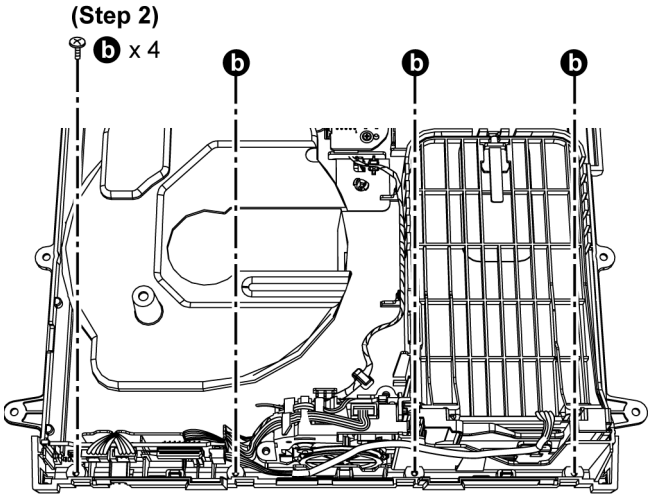

Step 3 : Release 2 catches.

Caution : During assembling, ensure the Lower Guide Rail is fully catched to the Front Panel Block.

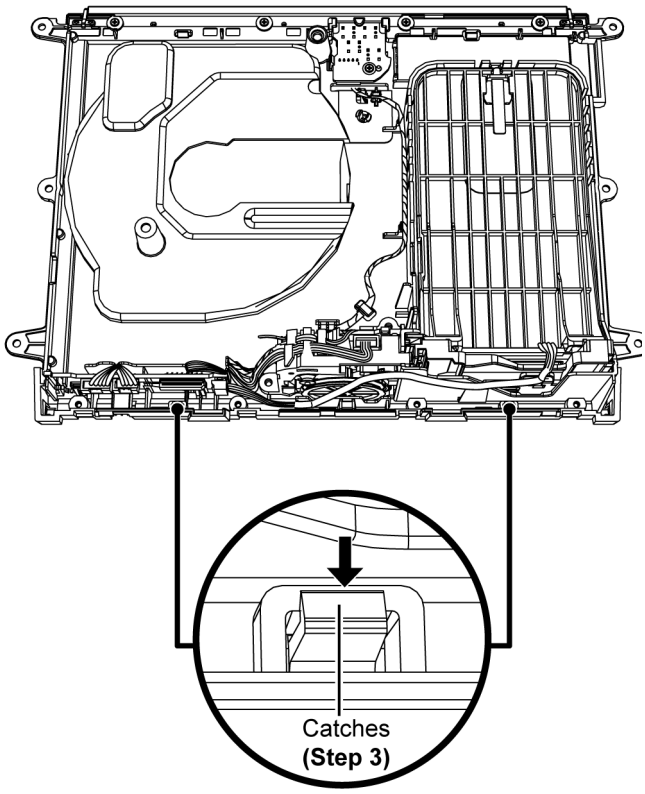

Step 4 : Remove the Lower Guide Rail.

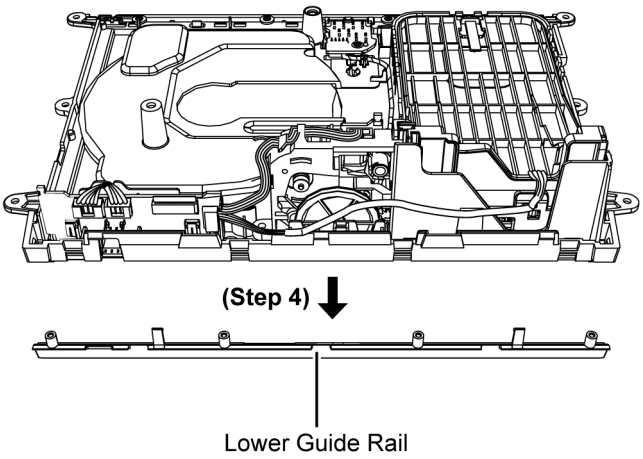

10.22. Disassembly of SMPS P.C.B.

- Refer to “Disassembly of Base Stand Assembly”
- Refer to “Disassembly of Door Assembly”
- Refer to “Disassembly of Front Ornament Unit”
- Refer to “Disassembly of Front Panel Block”

Step 1 : Remove 6 screws.

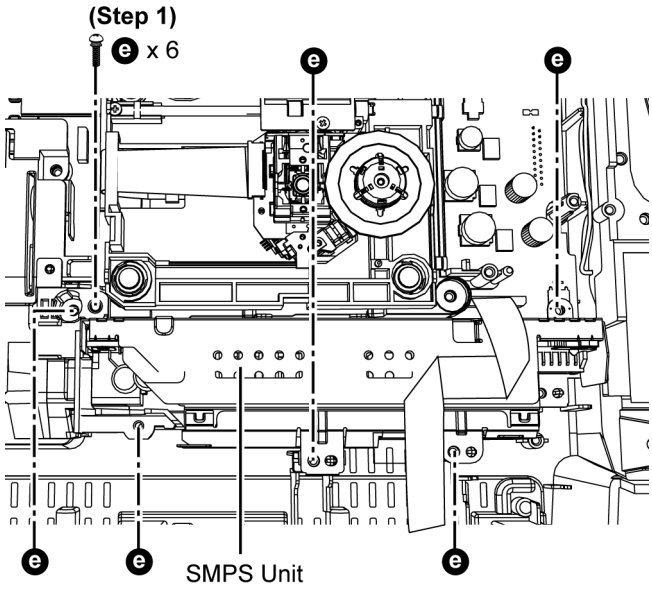

Step 2 : Lift up the 16P FFC taped on SMPS Unit.

Caution : During assembling, replace with new double sided tape if torn.

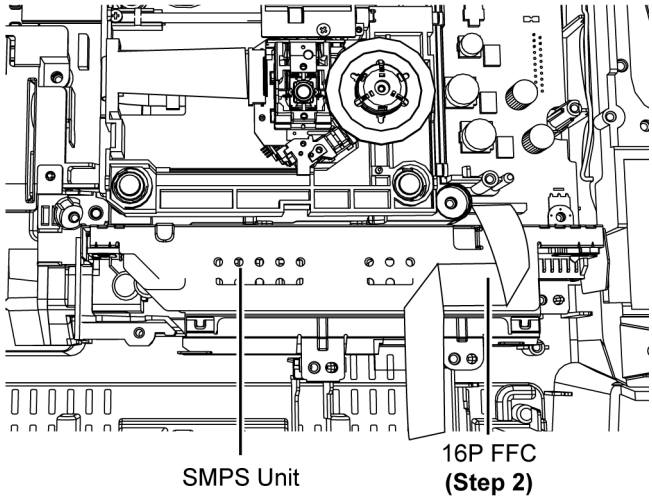

Step 3 : Gently lift up the SMPS Unit.

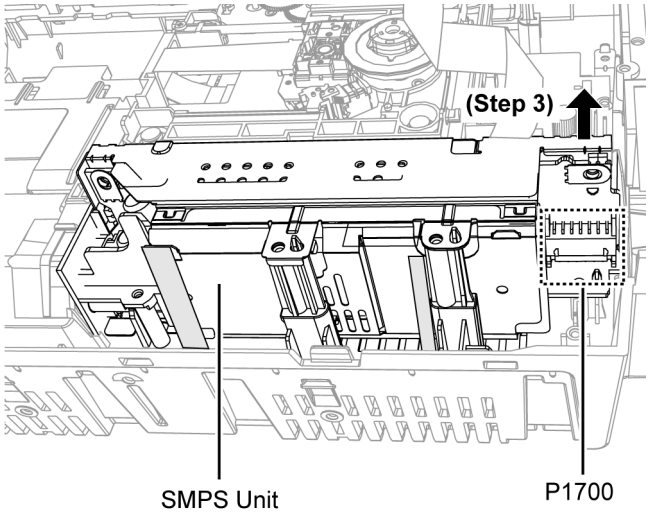

Caution : During assembling, align the SMPS Unit (between P1700 with CN1100). A “click” sound could be heard when the SMPS unit is attached properly to the Main P.C.B..

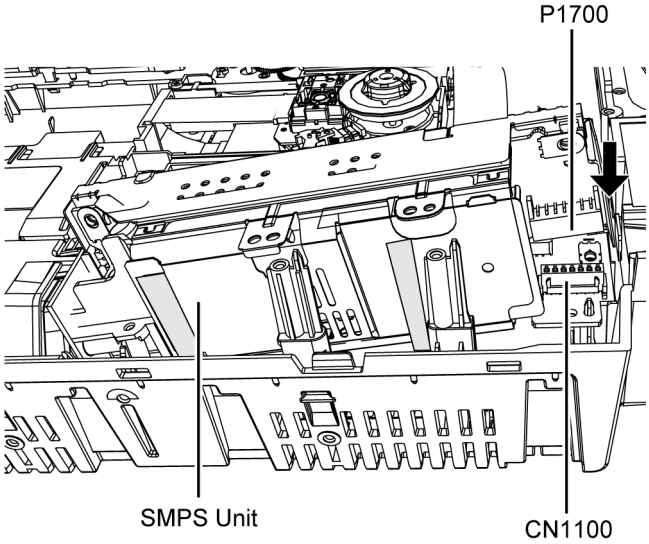

Step 4 : Remove the SMPS Unit.

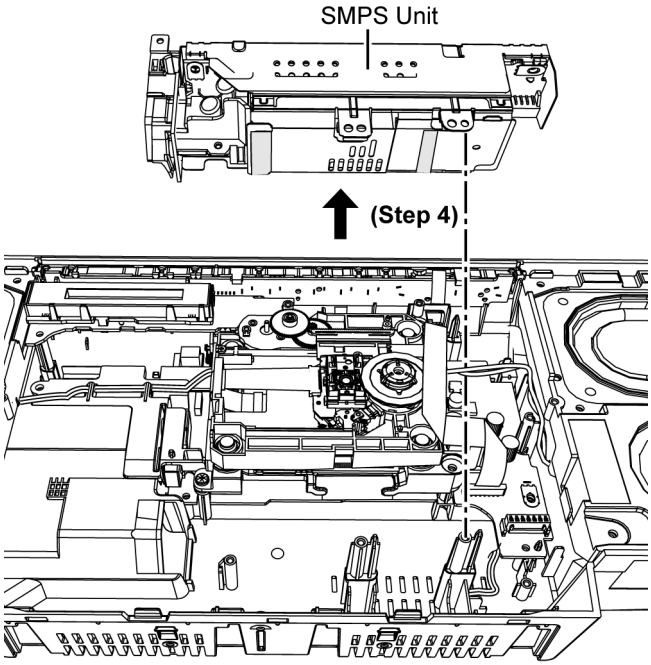

Step 5 : Remove 1 screw.

Step 6 : Upset the SMPS unit.

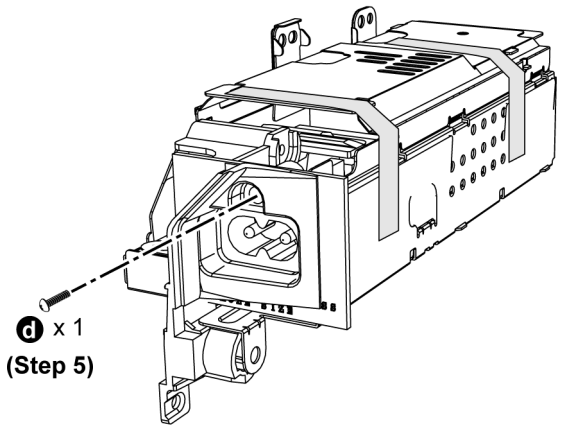

Step 7 : Insert a flathead screwdriver below the AC Inlet Holder.

Step 8 : Slightly lift up the screwdriver to release the catch.

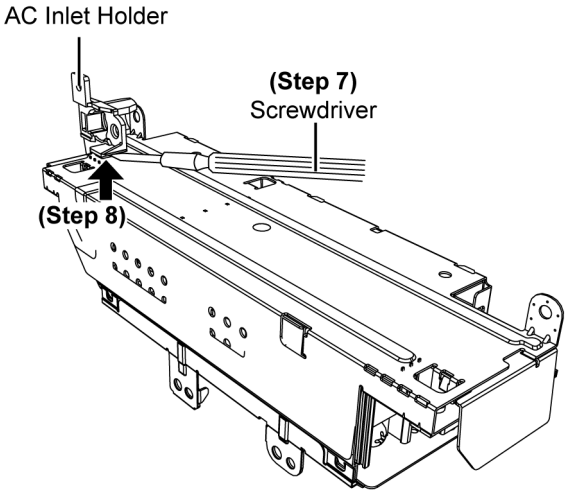

Step 9 : Remove AC Inlet Holder.

Caution : During assembling, ensure the AC Inlet Holder is fully catched to the SMPS Unit. A "click" sound will be heard when fully catched.

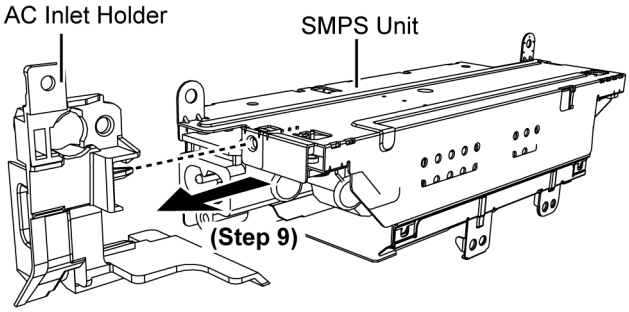

Step 10 : Lift up the Himelons.

Caution : Replace the Himelons if they are torn during disassembling.

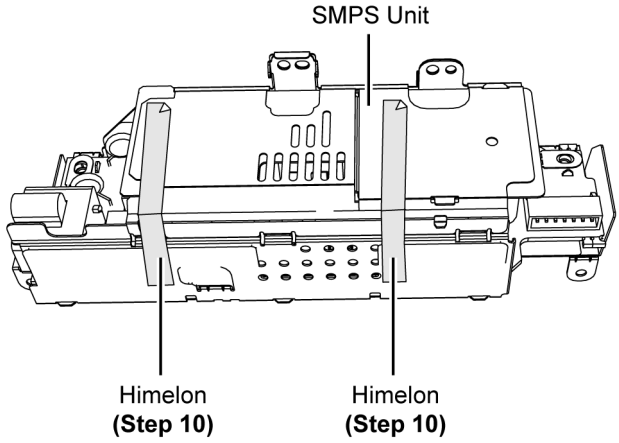

Step 11 : Press to release 2 catches using a screwdriver and gently push up the SMPS Shield Unit.

Caution : During assembling, ensure that the SMPS Shield Unit is catched properly to the SMPS bracket as shown.

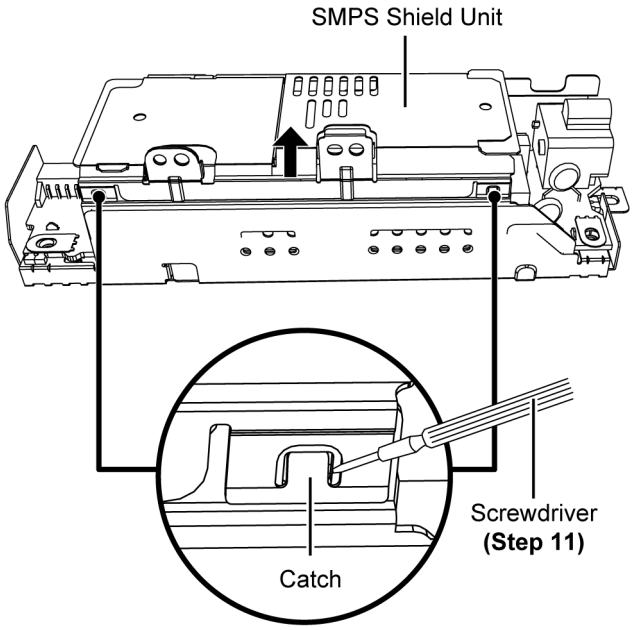

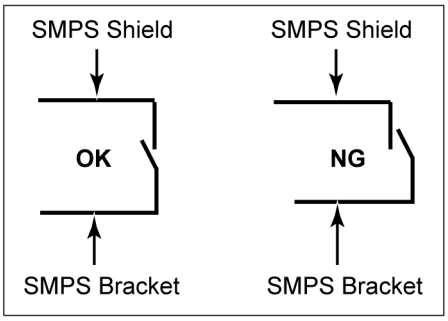

Step 12 : Gently push up the SMPS Shield Unit to release the catches.

Caution : During assembling, ensure that the SMPS Shield Unit is catched properly to the SMPS bracket as shown.

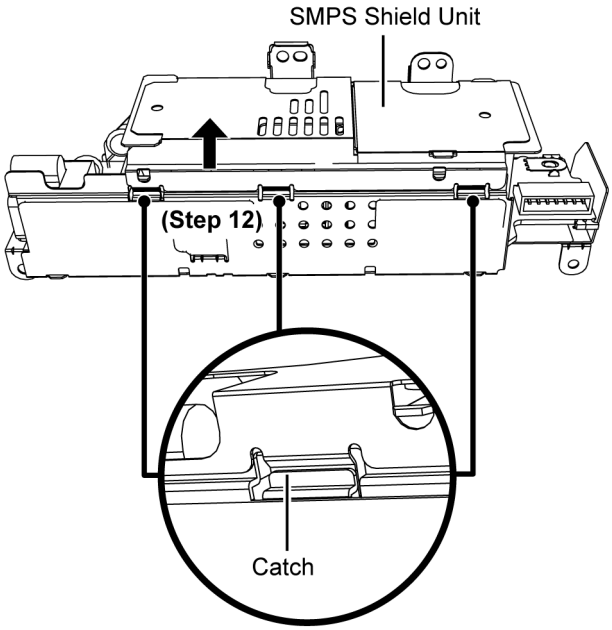

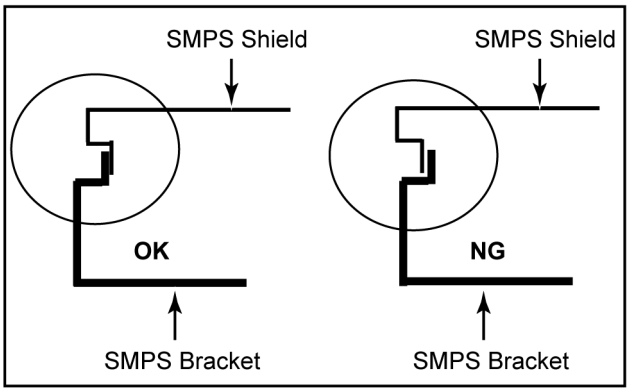

Step 13 : Remove the SMPS Shield Unit.

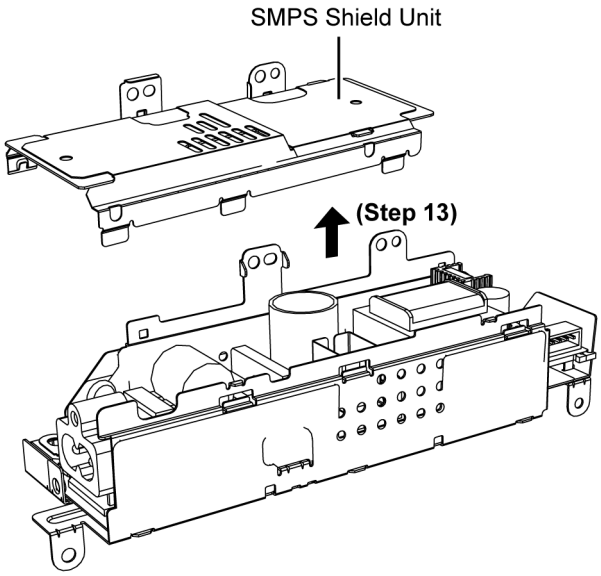

Step 14 : Remove 3 screws.

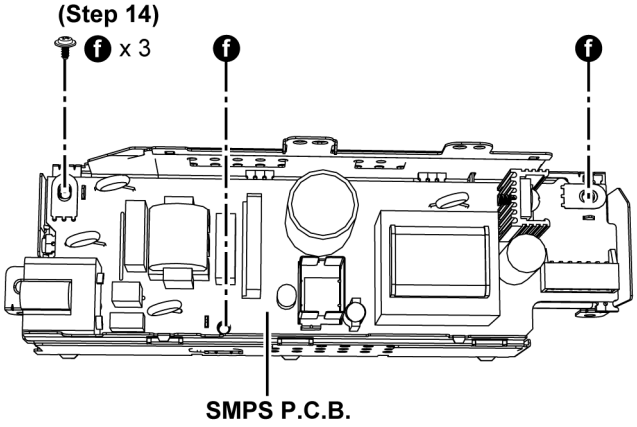

Caution: During assembling, ensure that the SMPS P.C.B. is properly seated on the locators.

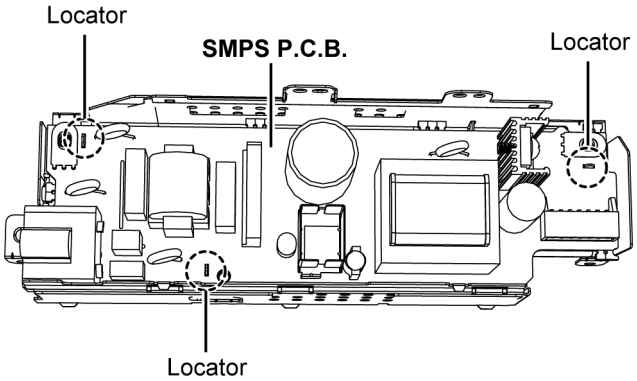

Step 15 : Remove the SMPS P.C.B..

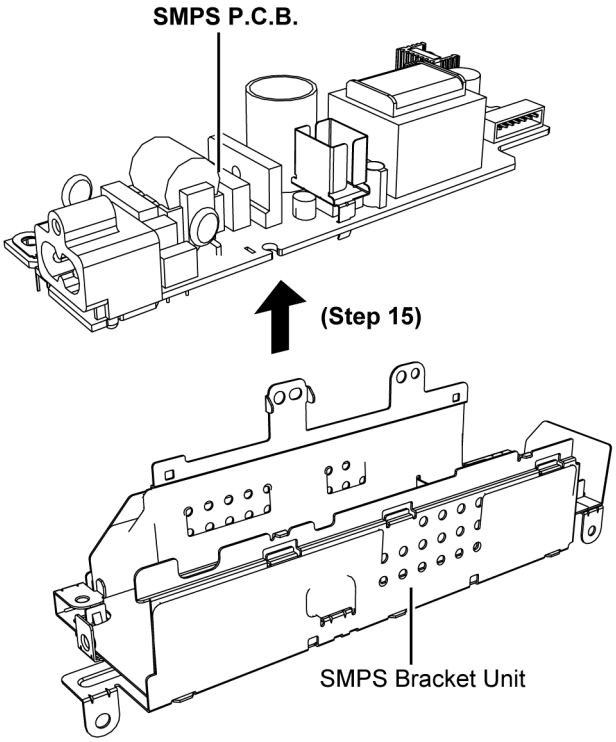

10.23. Replacement of Diode (D1700)

- Refer to “Disassembly of SMPS P.C.B.”

10.23.1. Disassembly of Diode (D1700)

Caution : Avoid touching the heatsink unit and SMPS P.C.B., due to its high temperature after prolonged use. Touching it may lead to injuries.

Step 1 : Desolder pins of the Diode (D1700) on the solder side of SMPS P.C.B..

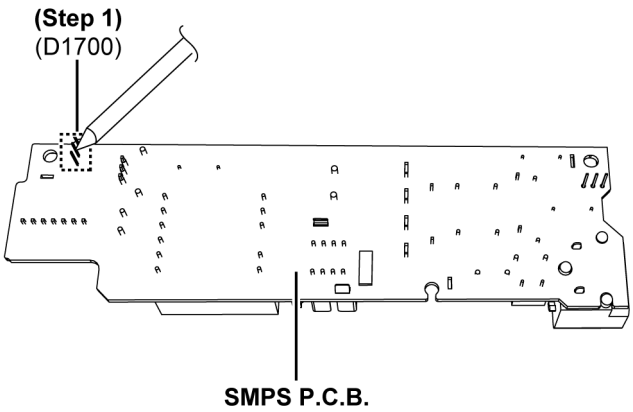

Step 2 : Remove 1 screw.

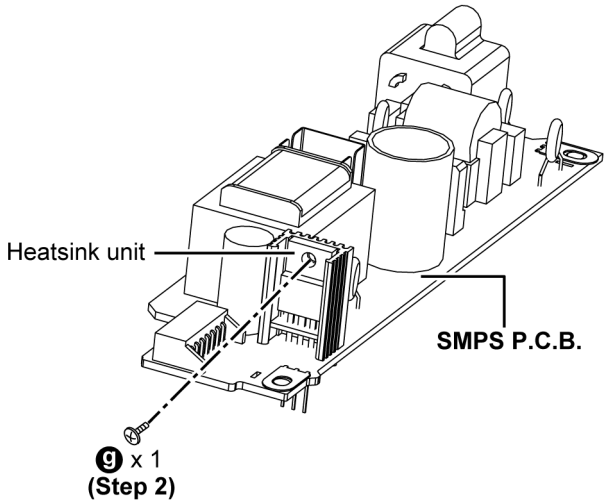

Step 3 : Remove the Diode (D1700).

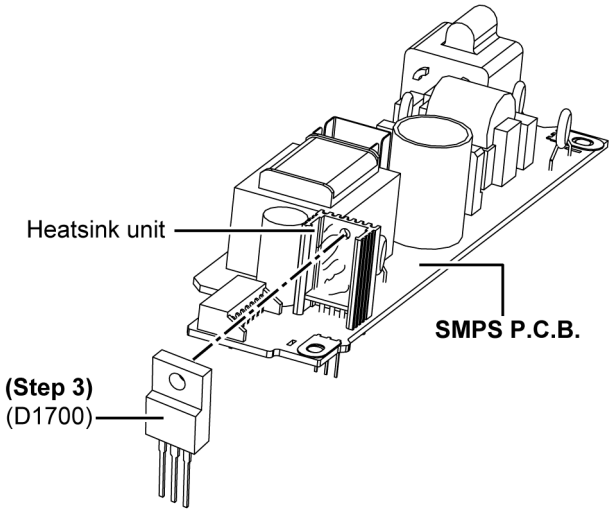

10.23.2. Assembly of Diode (D1700)

Step 1 : Apply grease to the heatsink unit.

Step 2 : Fix the Diode (D1700) onto SMPS P.C.B..

Step 3 : Fix the Diode (D1700) onto the heatsink unit with 1 screw.

Caution : Ensure the Diode (D1700) is fixed properly to the heatsink.

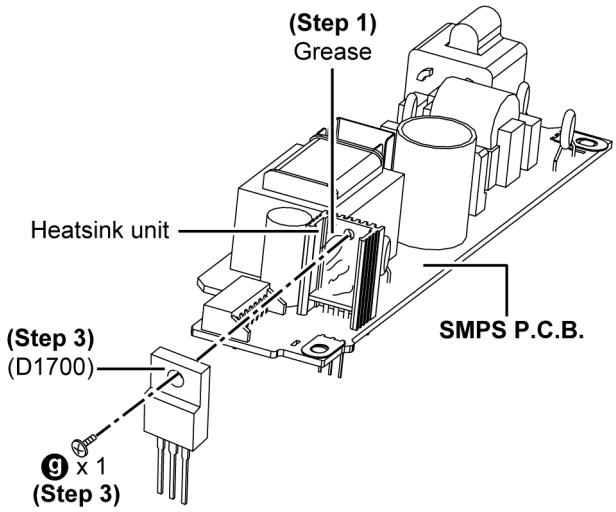

Step 4 : Solder pins of the Diode (D1700).

Caution : Ensure the Diode (D1700) is seated properly onto the SMPS P.C.B. before soldering.

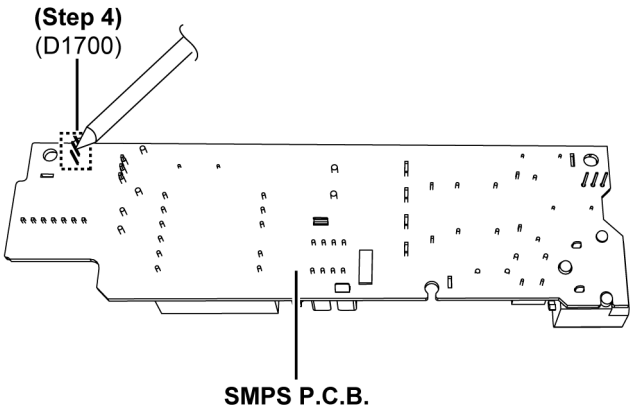

10.24. Replacement of Switching Regulator IC (IC1700)

- Refer to “Disassembly of SMPS P.C.B.”

10.24.1. Disassembly of Switching Regulator IC (IC1700)

Caution : Avoid touching the heatsink unit and SMPS P.C.B., due to its high temperature after prolonged use. Touching it may lead to injuries.

Step 1 : Desolder pins of the Heatsink Plate on the solder side of SMPS P.C.B..

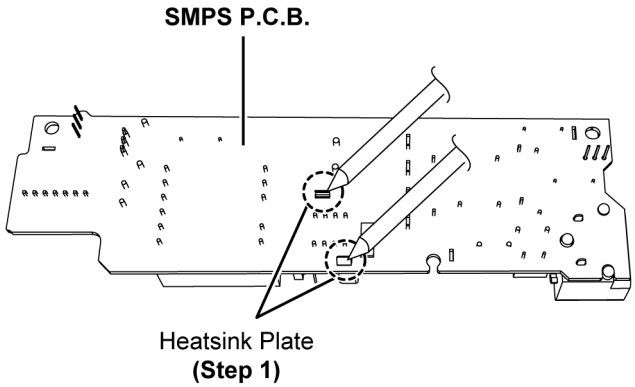

Step 2 : Remove the Heatsink Plate.

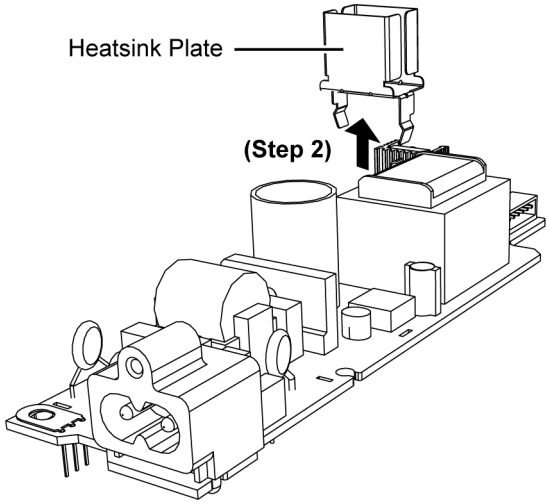

Step 3 : Desolder pins of the Switching Regulator IC (IC1700) on the solder side of SMPS P.C.B..

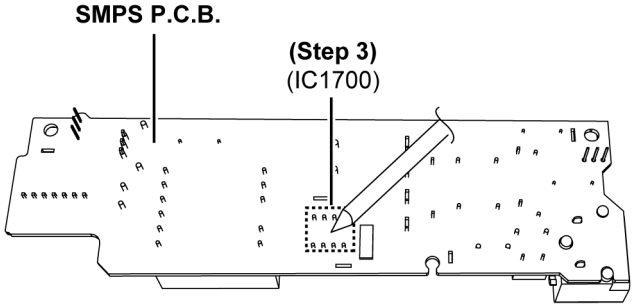

Step 4 : Remove the Switching Regulator IC (IC1700).

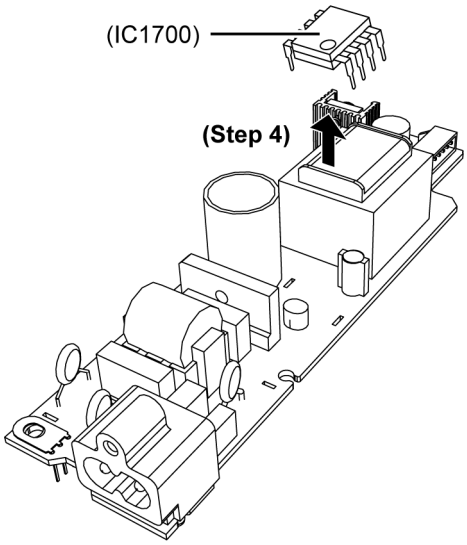

10.24.2. Assembly of Switching Regulator IC (IC1700)

Step 1 : Fix the Switching Regulator IC (IC1700) onto SMPS P.C.B..

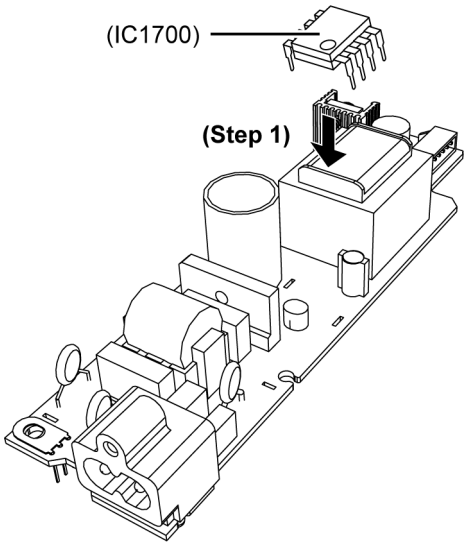

Step 2 : Solder pins of the Switching Regulator IC (IC1700).

Caution : Ensure the Switching Regulator IC (IC1700) is seated properly onto the SMPS P.C.B. before soldering.

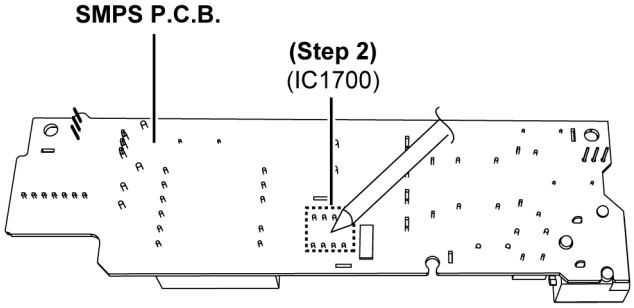

Step 3 : Fix the Heatsink Plate onto SMPS P.C.B..

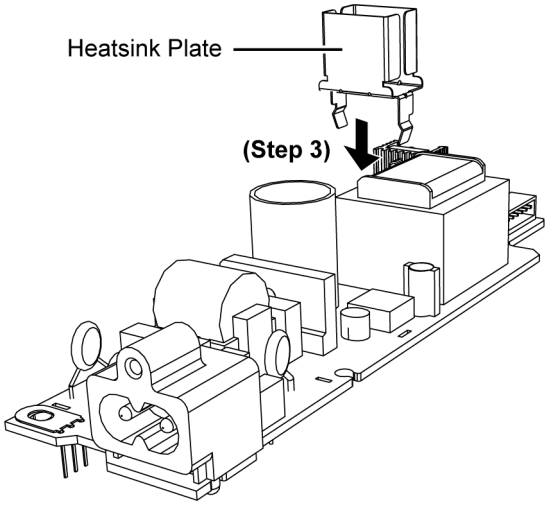

Step 4 : Solder pins of the Heatsink Plate.

Caution : Ensure the Heatsink Plate is seated properly onto the SMPS P.C.B. before soldering.

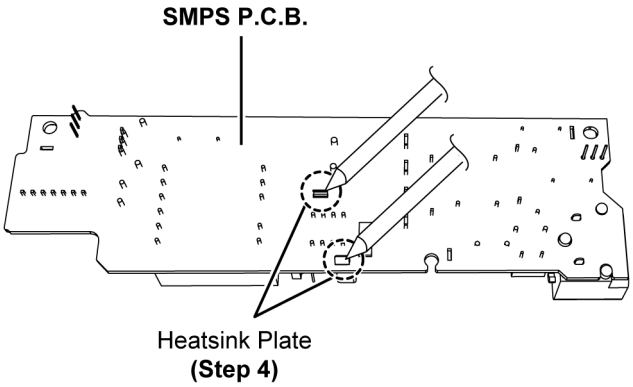

10.25. Disassembly of Panel P.C.B. & Button Ornament Unit

- Refer to “Disassembly of Base Stand Assembly”
- Refer to “Disassembly of Door Assembly”
- Refer to “Disassembly of Front Ornament Unit”
- Refer to “Disassembly of Front Panel Block”

Step 1 : Remove 1 screw.

Step 2 : Lift up the Panel P.C.B. together with Button Ornament Unit as shown.

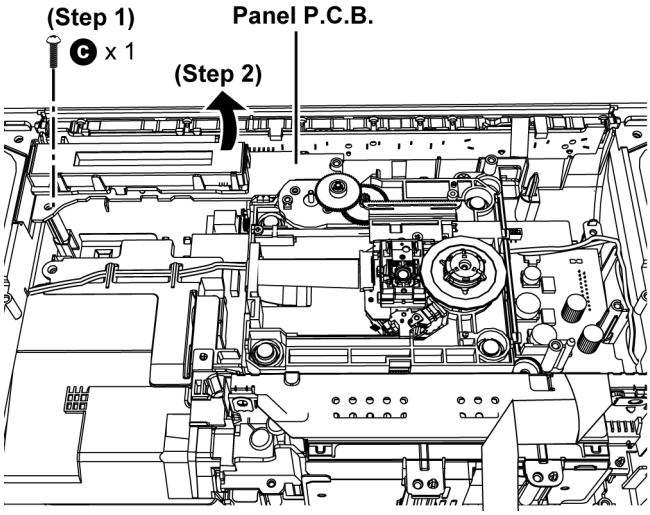

Step 3 : Detach 15P FFC at the connector (CN900) on the Button P.C.B..

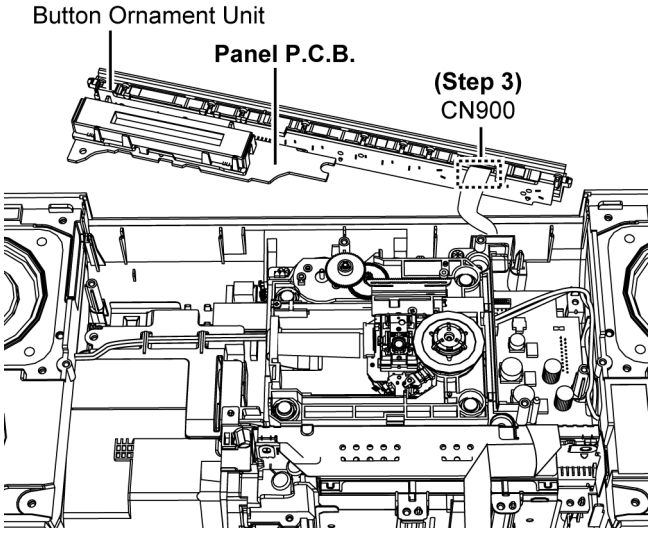

Step 4 : Detach the Panel P.C.B. from the Button Ornament unit.
Step 5 : Remove the Panel P.C.B..

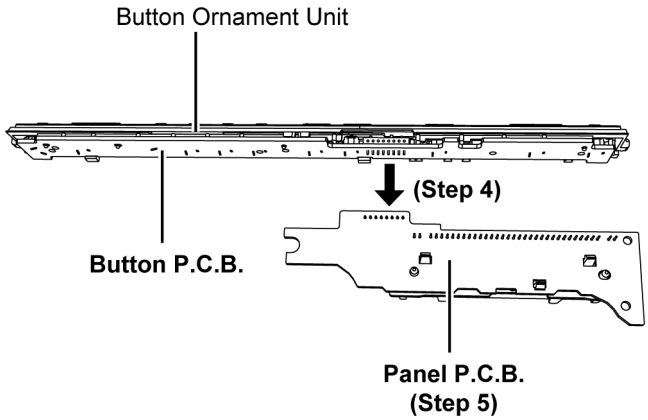

Caution : During assembling, A "click" sound could be heard when the Panel P.C.B. and the Button Ornament P.C.B. is properly connected.

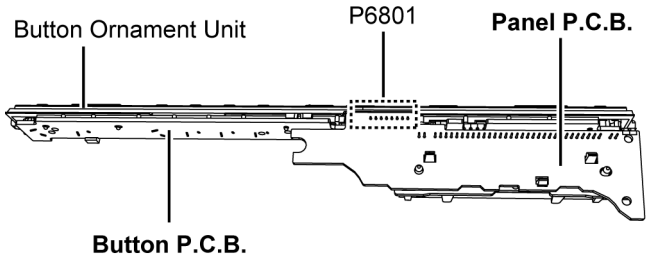

10.26. Disassembly of Button P.C.B.

- Refer to "Disassembly of Base Stand Assembly"
- Refer to "Disassembly of Door Assembly"
- Refer to "Disassembly of Front Ornament Unit"
- Refer to "Disassembly of Front Panel Block"
- Refer to "Disassembly of Panel P.C.B. & Button Ornament Unit"

Step 1 : Remove 3 screws.

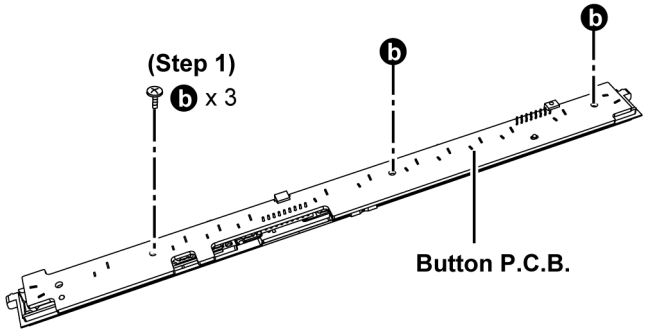

Step 2 : Lift up the Button P.C.B. in order of sequences (1) to (2) as shown.

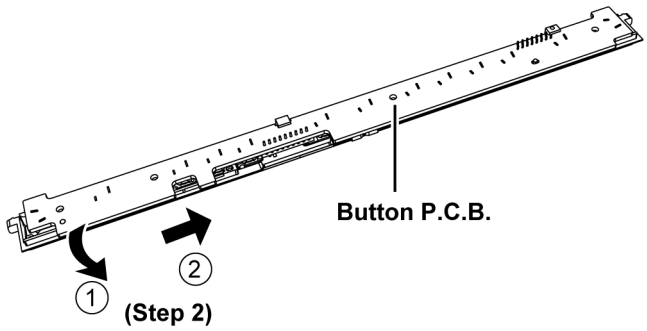

Step 3 : Remove the Button P.C.B..

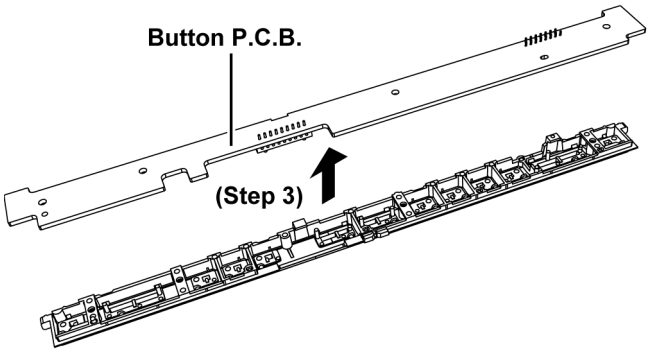

Caution: During assembling, ensure the Button P.C.B. is fully fix into rib and guide by sequence from 1 to 4.

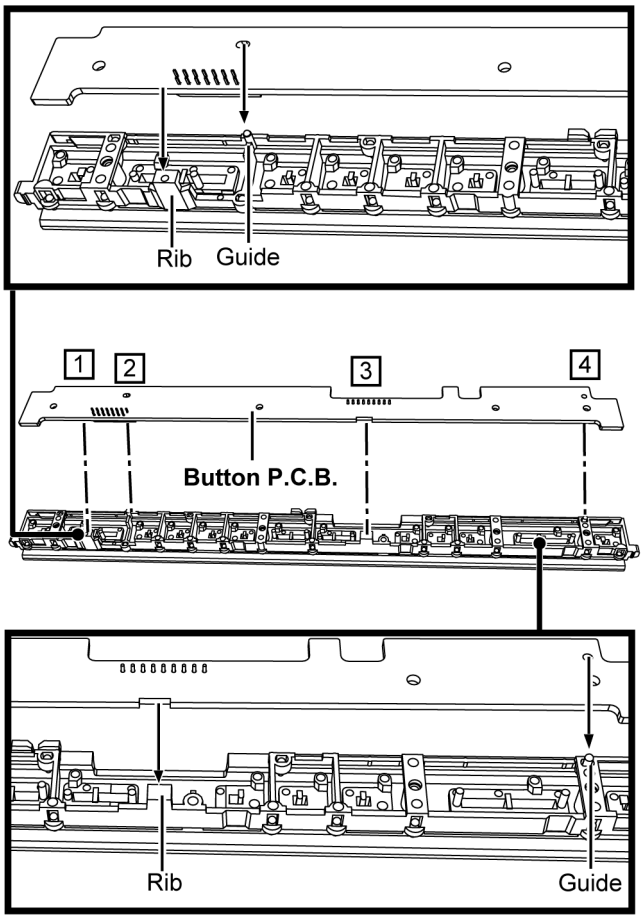

10.27. Disassembly of Button Ornament

- Refer to “Disassembly of Base Stand Assembly”
- Refer to “Disassembly of Door Assembly”
- Refer to “Disassembly of Front Ornament Unit”
- Refer to “Disassembly of Front Panel Block”
- Refer to “Disassembly of Panel P.C.B. & Button Ornament Unit”
- Refer to “Disassembly of Button P.C.B.”

Step 1 : Lift up the Button Ornament in order of sequences (1) to (2) as shown.

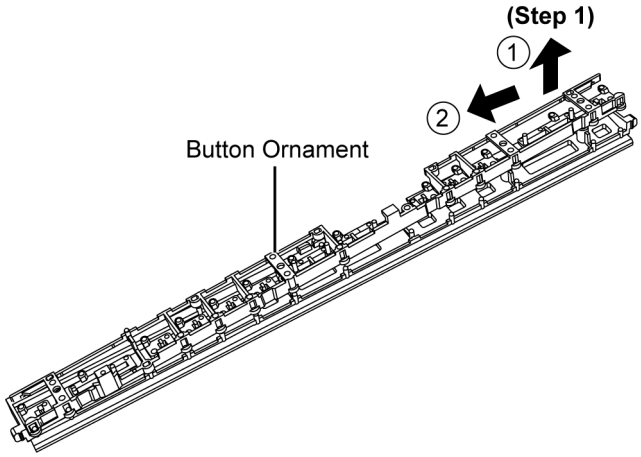

Step 2 : Remove the Button Ornament.

Caution : During assembling, align the holes of the button ornament with the guides of the Top Ornament & press together.

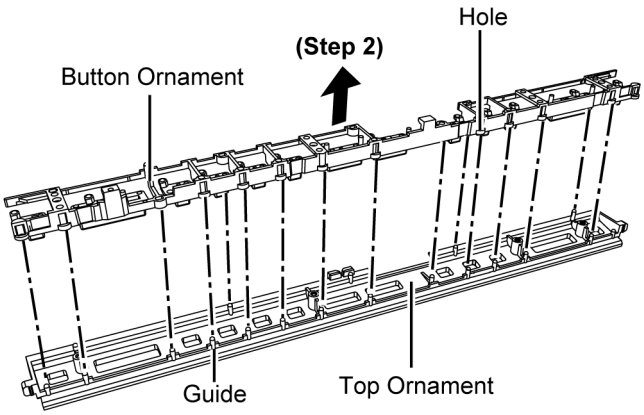

10.28. Disassembly of CD Mechanism

- Refer to “Disassembly of Base Stand Assembly”
- Refer to “Disassembly of Door Assembly”
- Refer to “Disassembly of Front Ornament Unit”
- Refer to “Disassembly of Front Panel Block”
- Refer to (Step 1) - (Step 4) of item 10.22.
- Refer to (Step 1) - (Step 3) of item 10.25.

Step 1 : Remove 2 screws.
Step 2 : Slightly lift up the CD Mechanism.

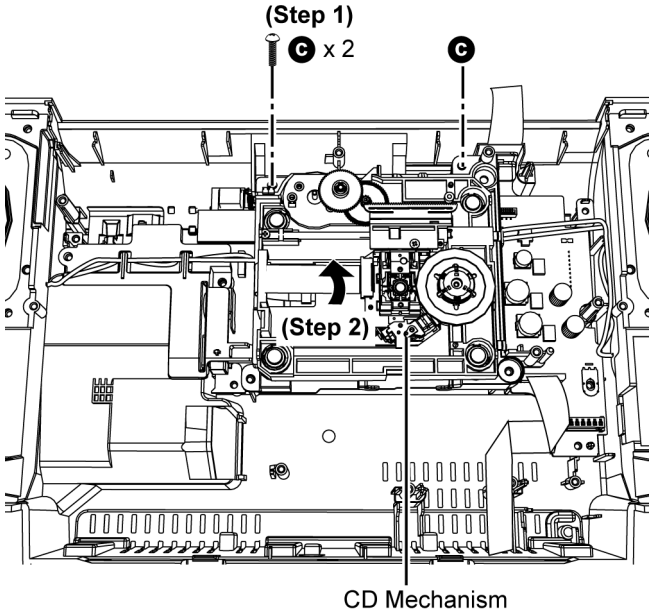

Step 3 : Detach 30P FFC at the connector (CN6006) on the Main P.C.B..

Caution : During assembling, ensure 30P FFC is fix inside the slot at middle chassis as shown.

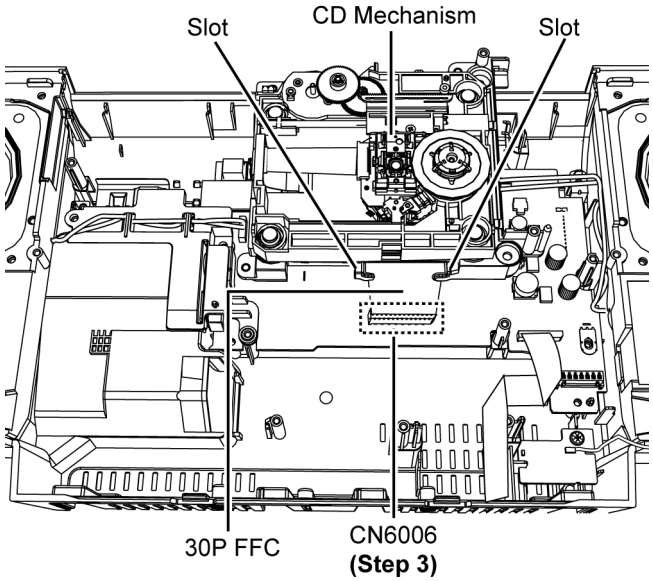

Caution : During assembling, hold the CD Mechanism as shown to fix 30P FFC to Main P.C.B..

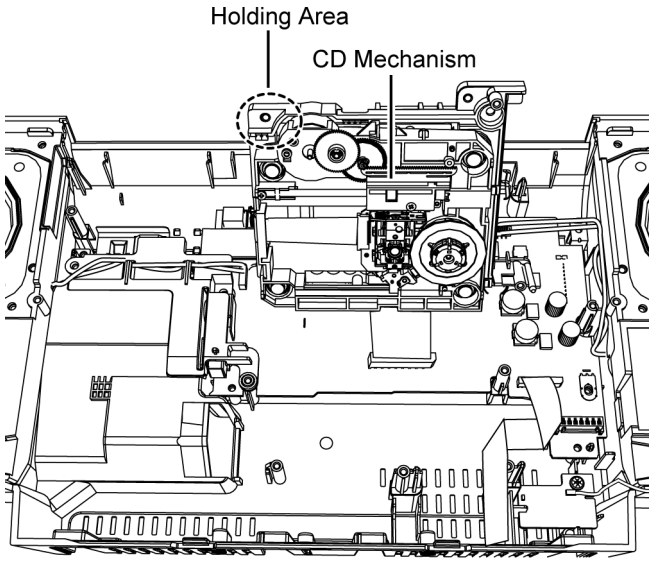

Step 4 : Remove the CD Mechanism.

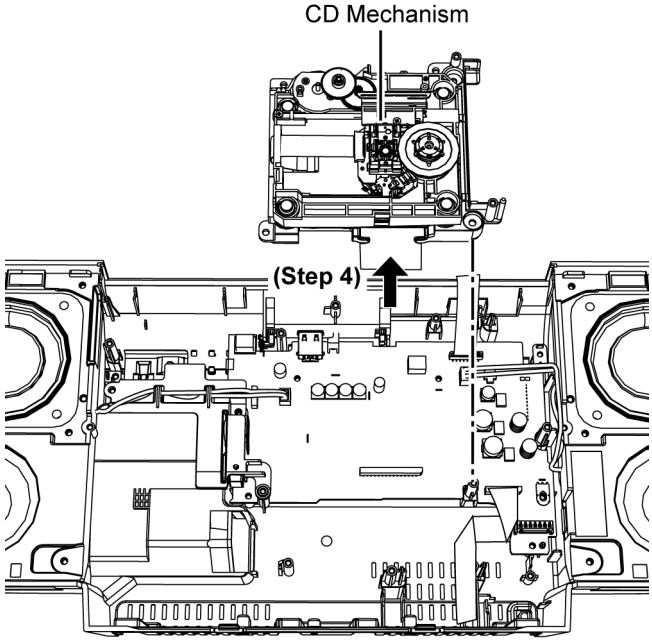

10.29. Disassembly of CD Servo P.C.B.

- Refer to “Disassembly of CD Mechanism”

Step 1 : Release catches and push down the fixed pins as arrow shown.

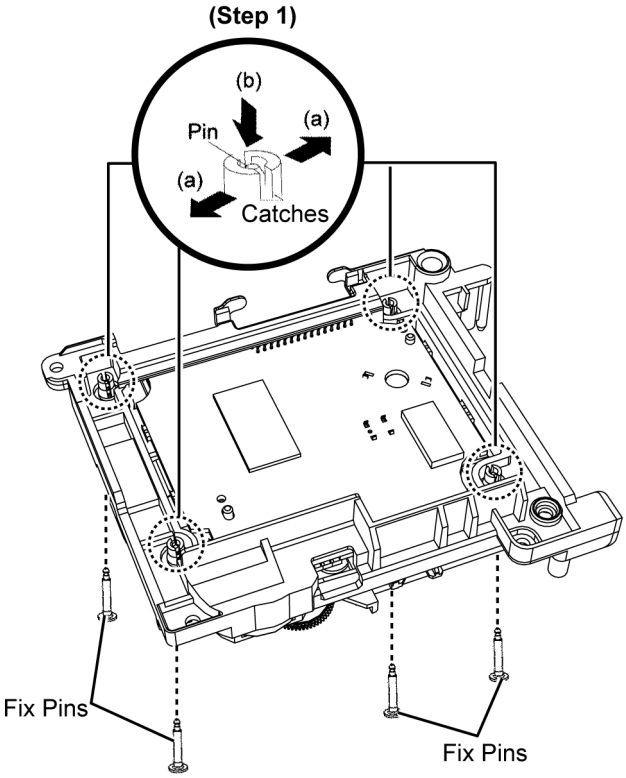

Step 2 : Lift up the Mecha Chassis & remove the Floating Springs.

Caution : Keep the Floating Springs in safe place and place them back during assembling.

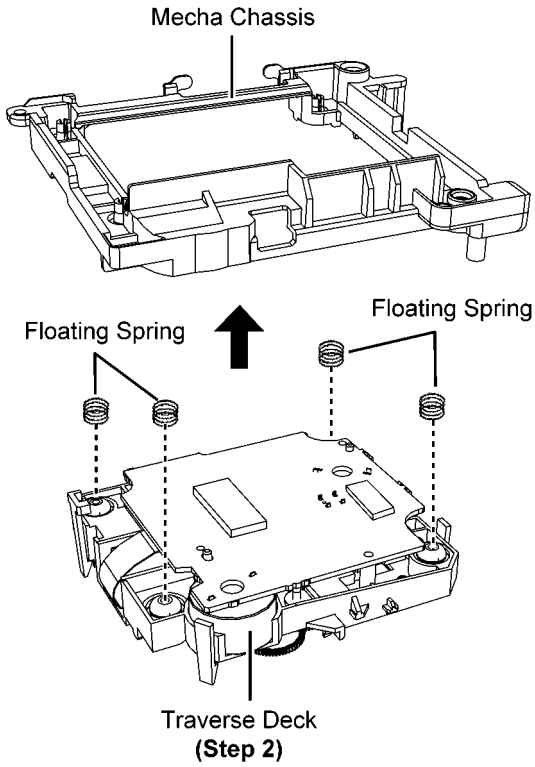

Step 3 : Remove 3 screws.

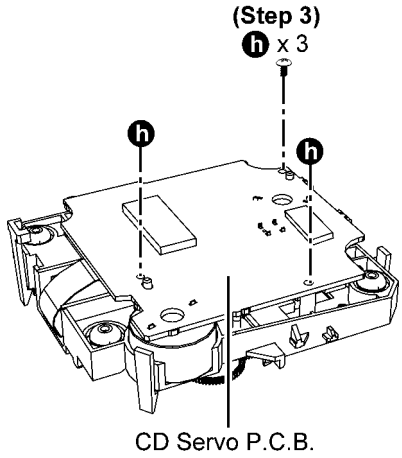

Step 4 : Desolder points on the solder side of the CD Servo P.C.B..

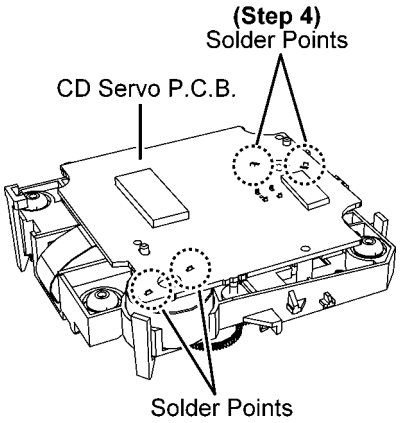

Step 5 : Upset the CD Servo P.C.B..

Step 6 : Lift up the Connector Cover.

Caution : Do not use strong force as it may damage the connector cover.

Step 7 : Detach 24P FFC at the connector (CN7001) from the CD Servo P.C.B..

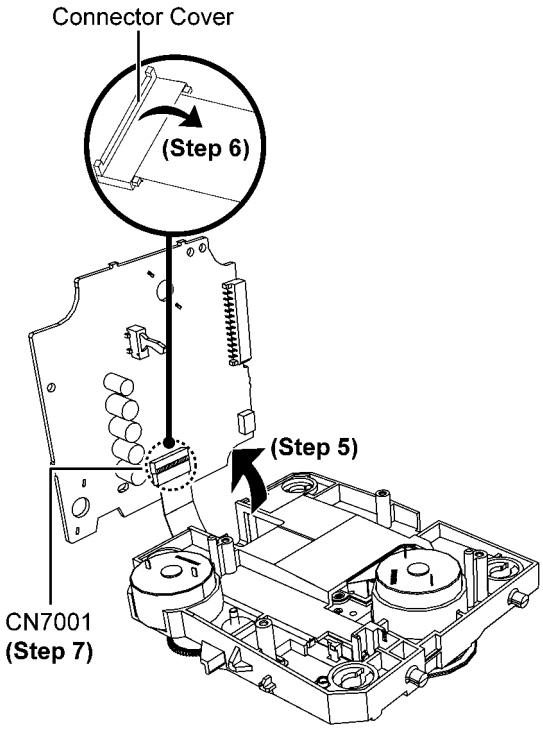

Step 8 : Attach short pin to the 24P FFC of the Traverse Assembly.

Step 9 : Remove the CD Servo P.C.B..

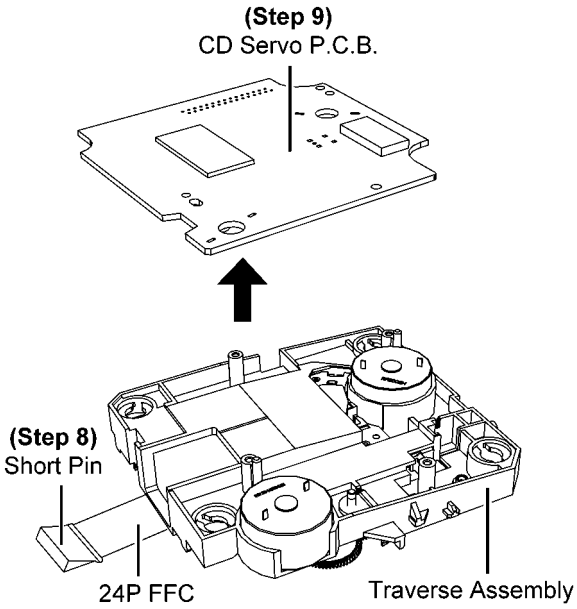

10.30. Disassembly of Jack Lid

- Refer to “Disassembly of Base Stand Assembly”
- Refer to “Disassembly of Door Assembly”
- Refer to “Disassembly of Front Ornament Unit”
- Refer to “Disassembly of Front Panel Block”
- Refer to (Step 1) - (Step 4) of item 10.22.
- Refer to (Step 1) - (Step 3) of item 10.25.
- Refer to “Disassembly of CD Mechanism”

Step 1 : Release the Jack Lid Spring.

Caution : Keep the Jack Lid Spring in safe place and place them back during assembling.

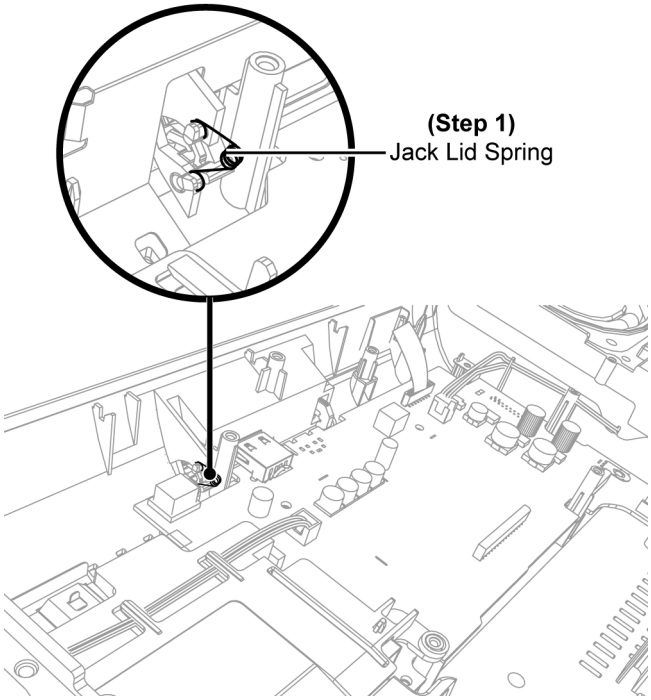

Step 2 : Press to open the Jack Lid.

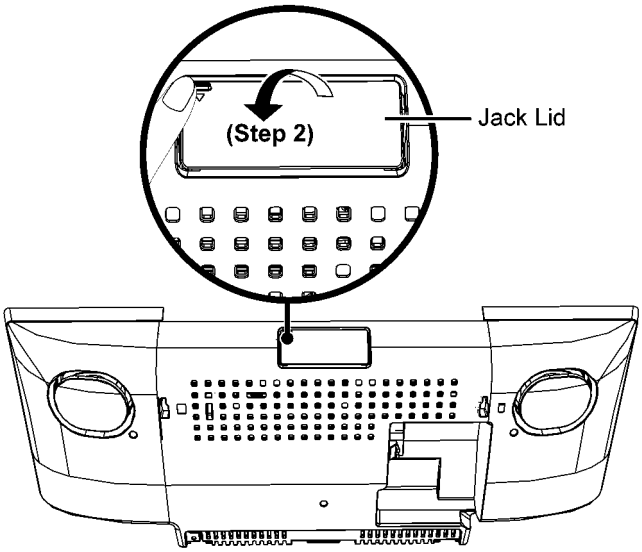

Step 3 : Push the shaft of the Jack Lid inwards in the direction as shown.

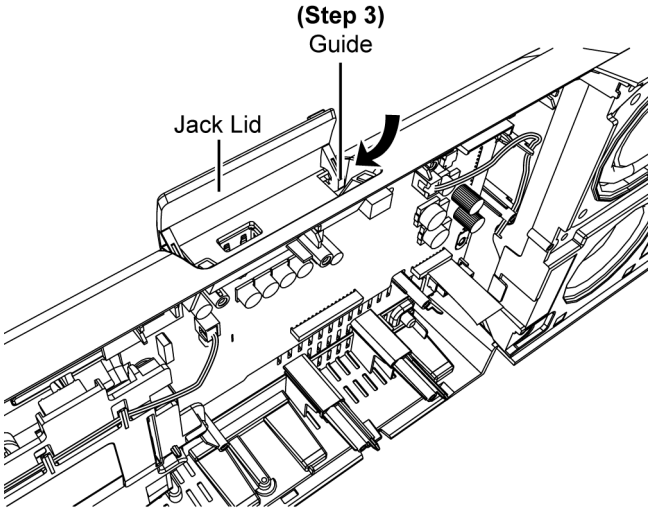

Step 4 : Lift up to remove the Jack Lid in the direction as shown.

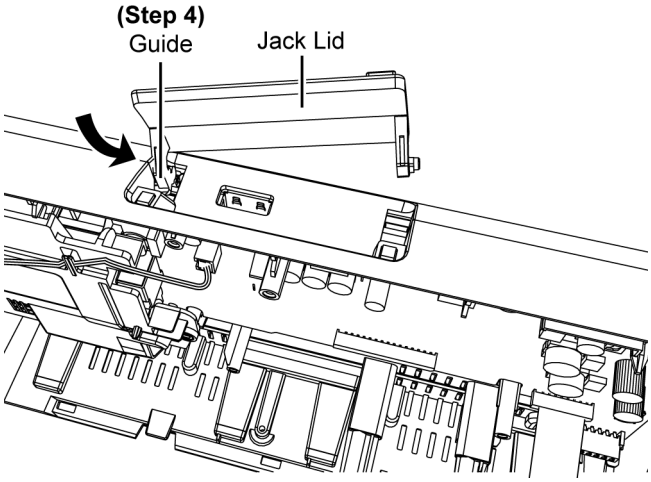

Caution : During assembling, insert the shaft of the Jack Lid into hole A, then press & push the shaft into hole B.

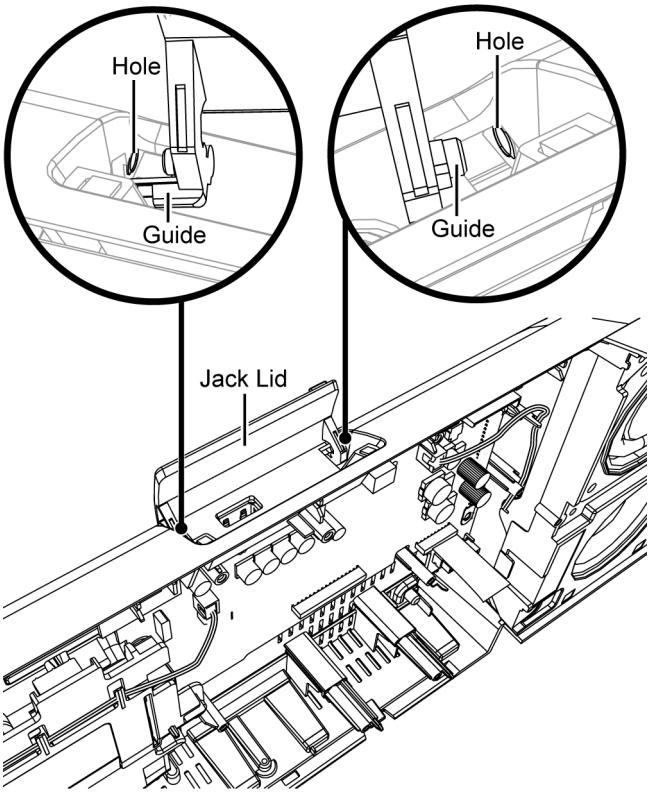

10.31. Disassembly of Main P.C.B.

- Refer to “Disassembly of Base Stand Assembly”
- Refer to “Disassembly of Door Assembly”
- Refer to “Disassembly of Front Ornament Unit”
- Refer to “Disassembly of Front Panel Block”
- Refer to (Step 1) - (Step 4) of item 10.22.
- Refer to (Step 1) - (Step 3) of item 10.25.
- Refer to “Disassembly of CD Mechanism”

Step 1 : Detach 2P wire at the connector (CN401) on the Main P.C.B..

Step 2 : Release the 2P wire from the slots.

Caution : During assembling, dressed the 2P wire into the slots.

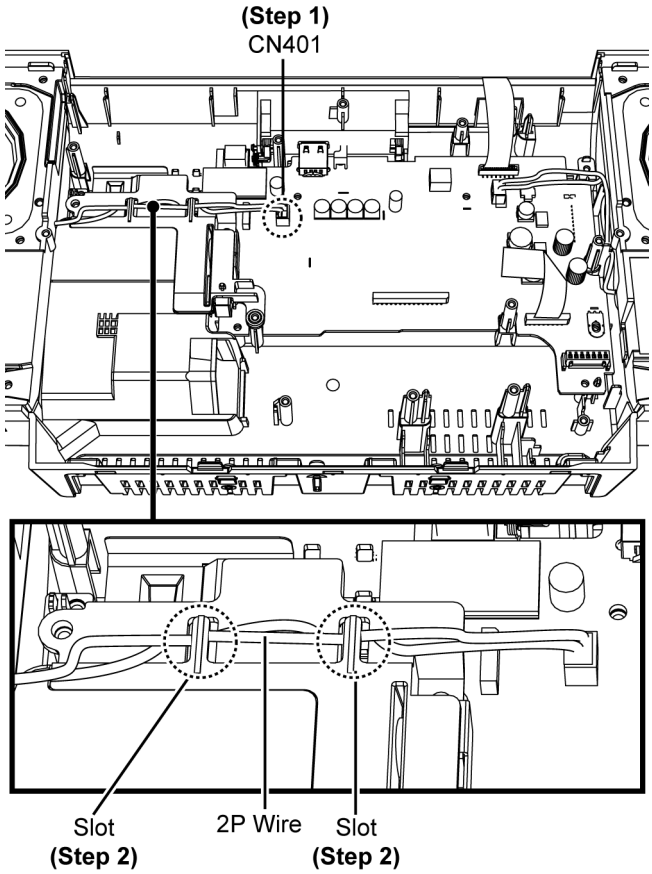

Step 3 : Remove 2 screws.

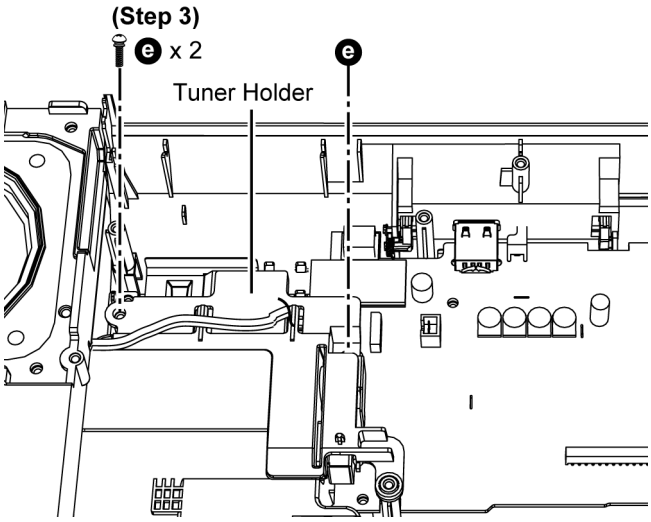

Step 4 : Remove the Tuner Holder.

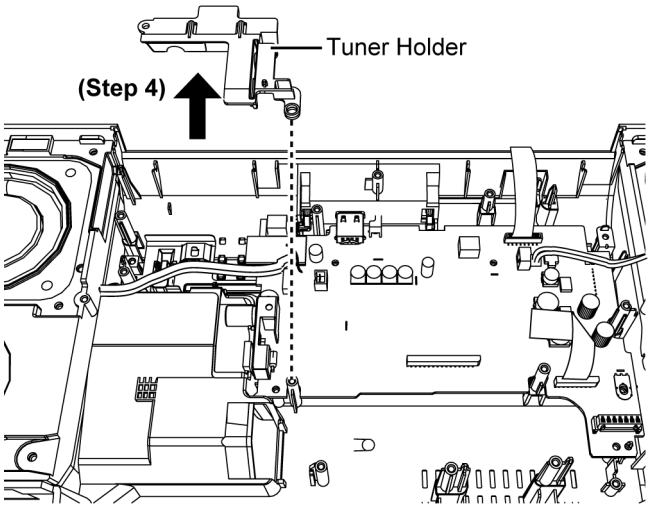

Step 5 : Detach 2P wire at the connector (CN400) on the Main P.C.B..

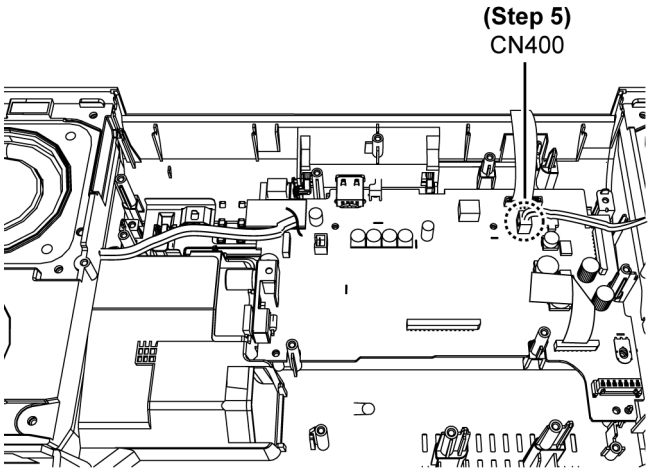

Step 6 : Remove 3 screws.
Step 7 : Slightly Lift up the Main P.C.B..

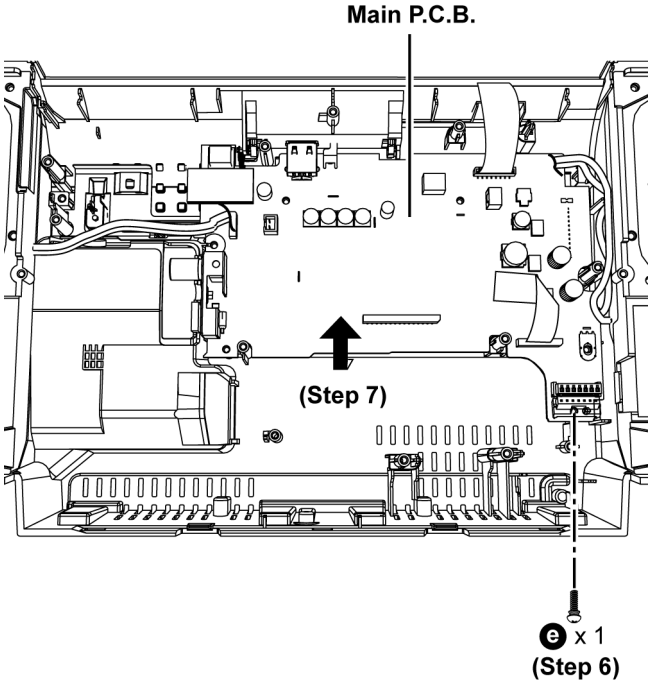

Step 8 : Remove the Main P.C.B. as shown.

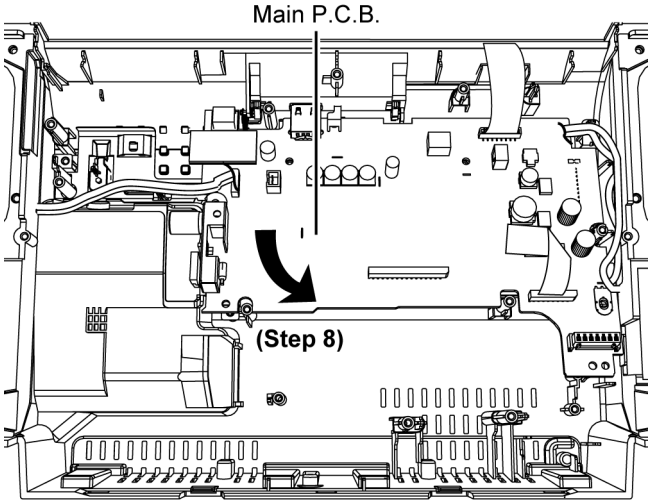

Caution 1 : During assembling, ensure the iPad Jack (JK6000) are inserted into the holes of Rear Cabinet Assembly as shown.

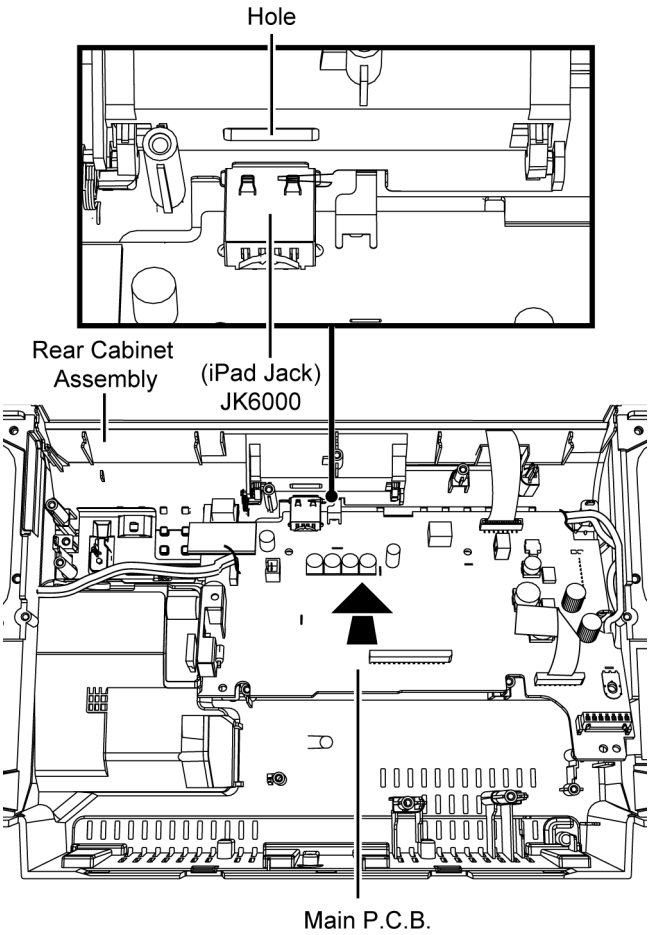

Caution 2 : During assembling, align the Main P.C.B. with the locator & ensure it is properly seated.

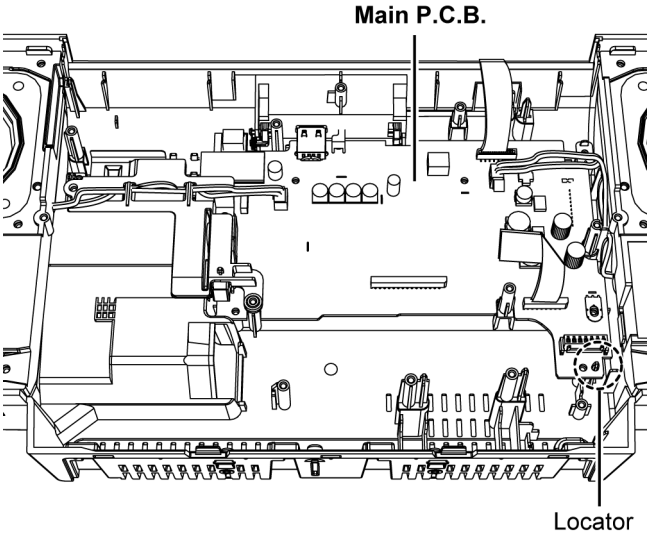

10.32. Disassembly of Front Speaker (SP1)

- Refer to “Disassembly of Base Stand Assembly”
- Refer to “Disassembly of Door Assembly”
- Refer to “Disassembly of Front Ornament Unit”
- Refer to “Disassembly of Front Panel Block”
- Refer to (Step 1) - (Step 4) of item 10.22.
- Refer to (Step 1) - (Step 3) of item 10.25.
- Refer to “Disassembly of CD Mechanism”

Step 1 : Detach 2P wire at the connector (CN401) on the Main P.C.B..

Step 2 : Release the 2P wire from the slots.

Caution : During assembling, dressed the 2P wire into the slots as shown.

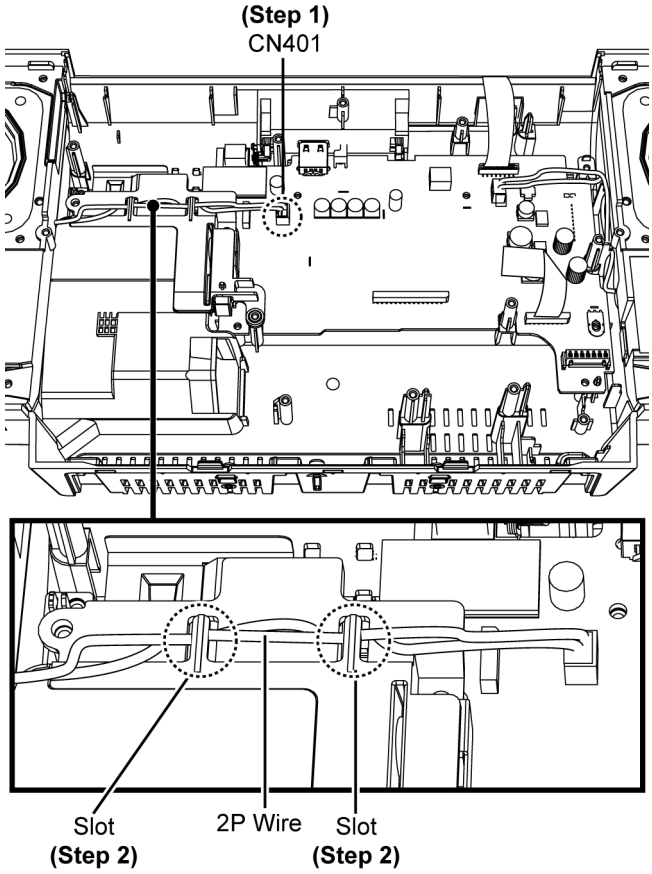

Step 3 : Remove 4 screws.

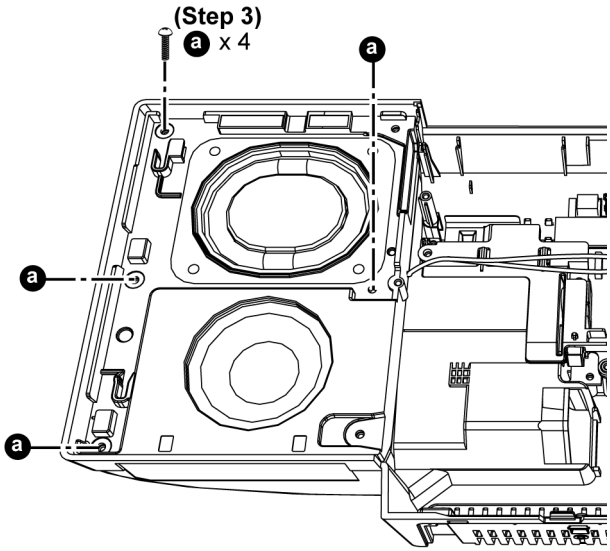

Step 4 : Lift up the Front Speaker Assembly (L) using a flat-head screw driver.

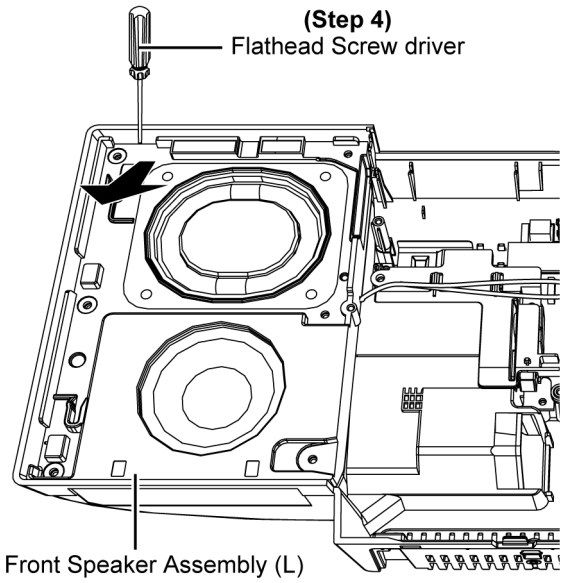

Step 5 : Desolder the (+) speaker wire and (-) speaker wire at the terminals on the Front Speaker (SP1).

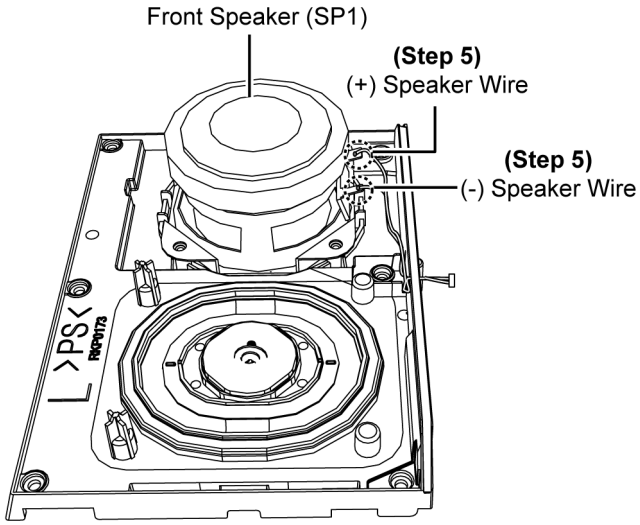

Step 6 : Remove 4 screws.

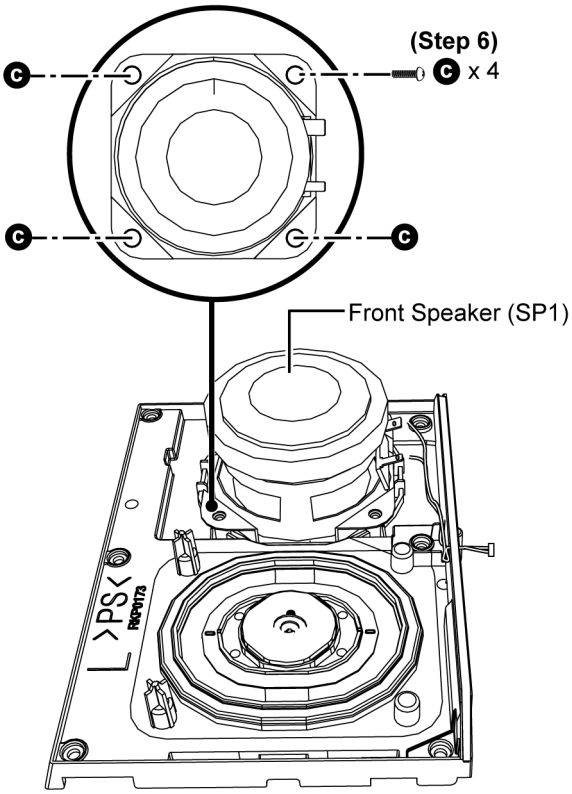

Step 7 : Remove the Front Speaker (SP1).

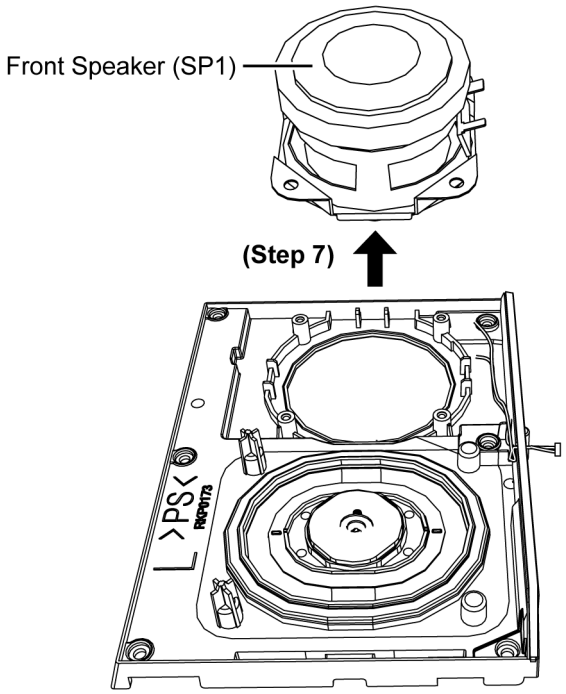

Caution 1 : During assembling, ensure the speaker wires is soldered properly, check for dry joints.
Caution 2 : During assembling, dressed the speaker wires into the slots.

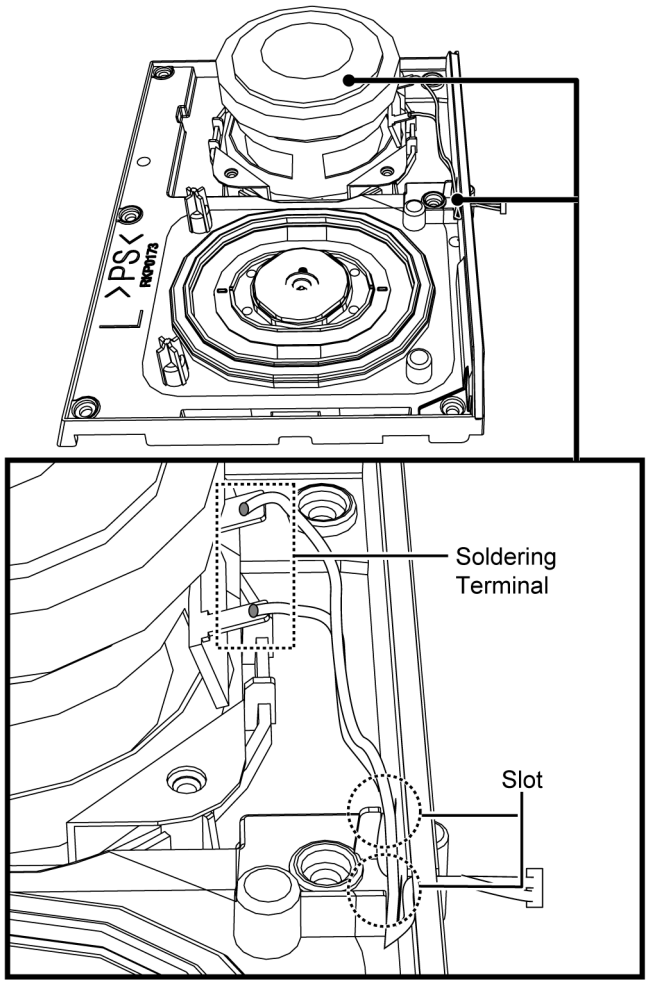

10.33. Disassembly of Front Speaker (SP2)

- Refer to “Disassembly of Base Stand Assembly”
- Refer to “Disassembly of Door Assembly”
- Refer to “Disassembly of Front Ornament Unit”
- Refer to “Disassembly of Front Panel Block”
- Refer to (Step 1) - (Step 4) of item 10.22.
- Refer to (Step 1) - (Step 3) of item 10.25.
- Refer to “Disassembly of CD Mechanism”

Step 1 : Detach 2P wire at the connector (CN400) on the Main P.C.B..

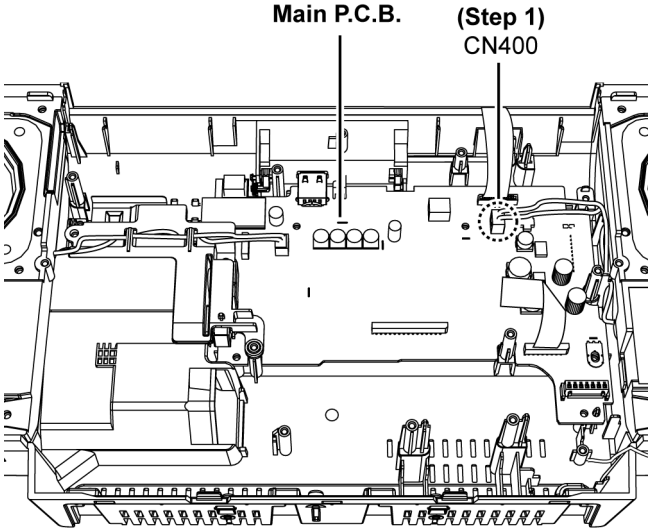

Step 2 : Remove 4 screws.

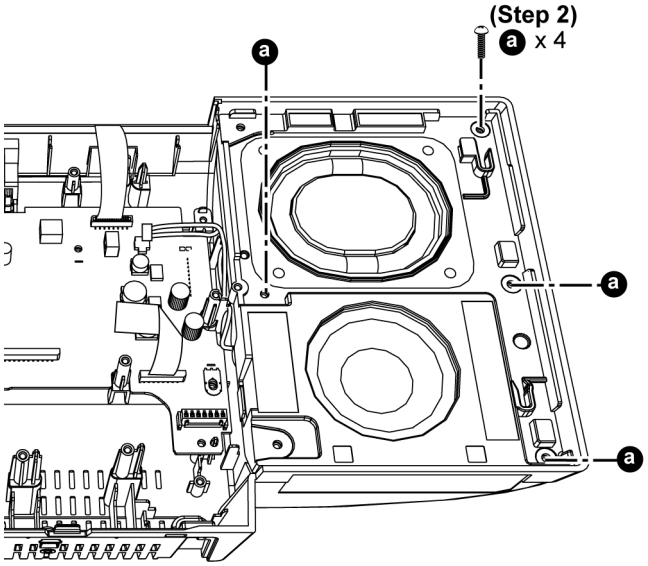

Step 3 : Lift up the Front Speaker Assembly (R) using a Flat-head screw driver.

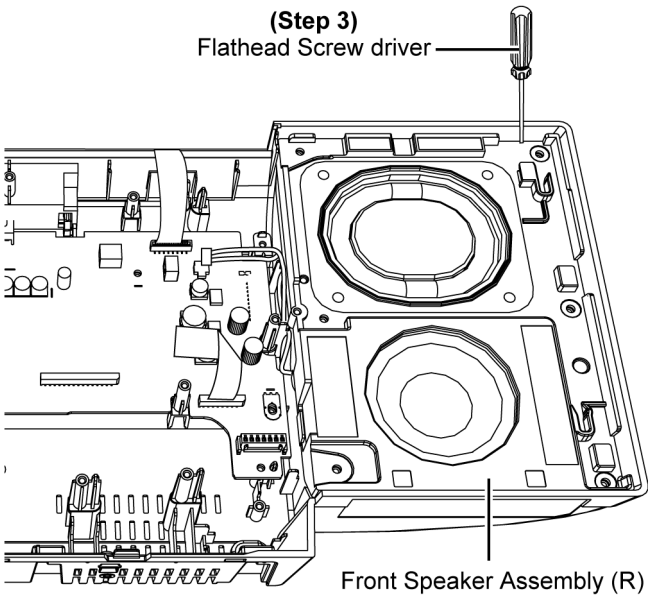

Step 4 : Desolder the (+) speaker wire and (-) speaker wire at the terminals on the Front Speaker (SP2).

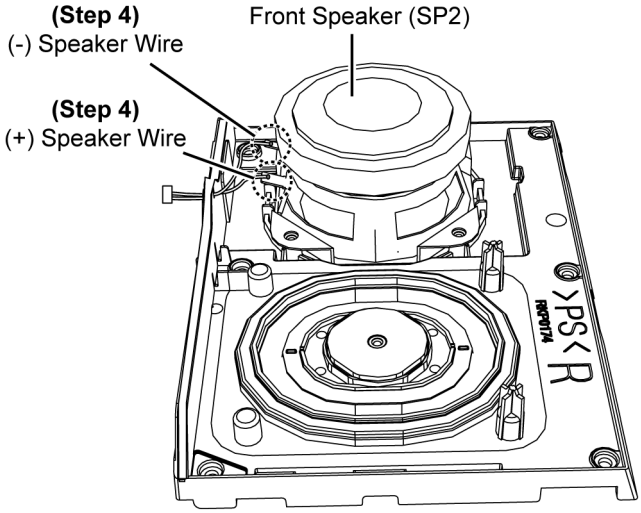

Step 5 : Remove 4 screws.

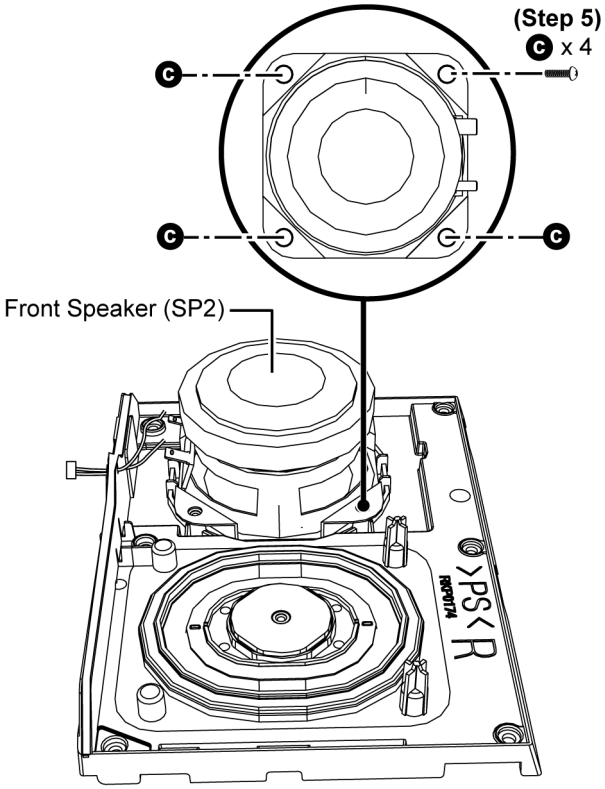

Step 6 : Remove Front Speaker (SP2).

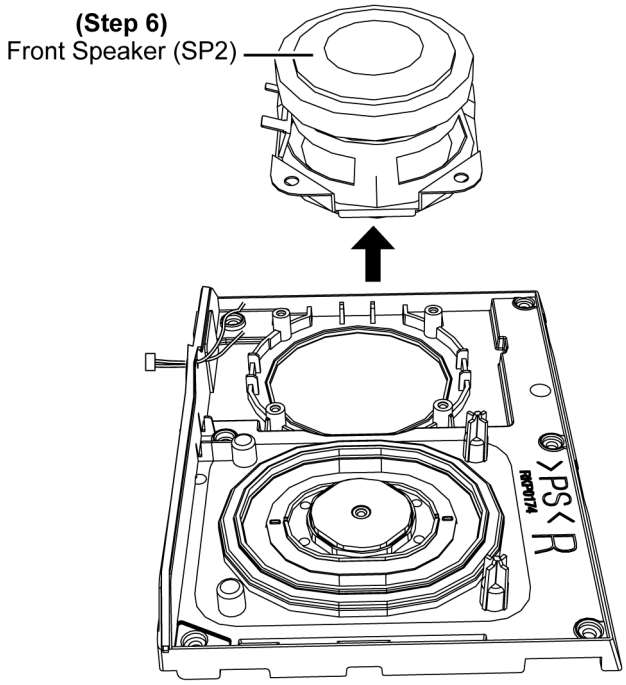

Caution 1 : During assembling, ensure the speaker wires is soldered properly, check for dry joints.

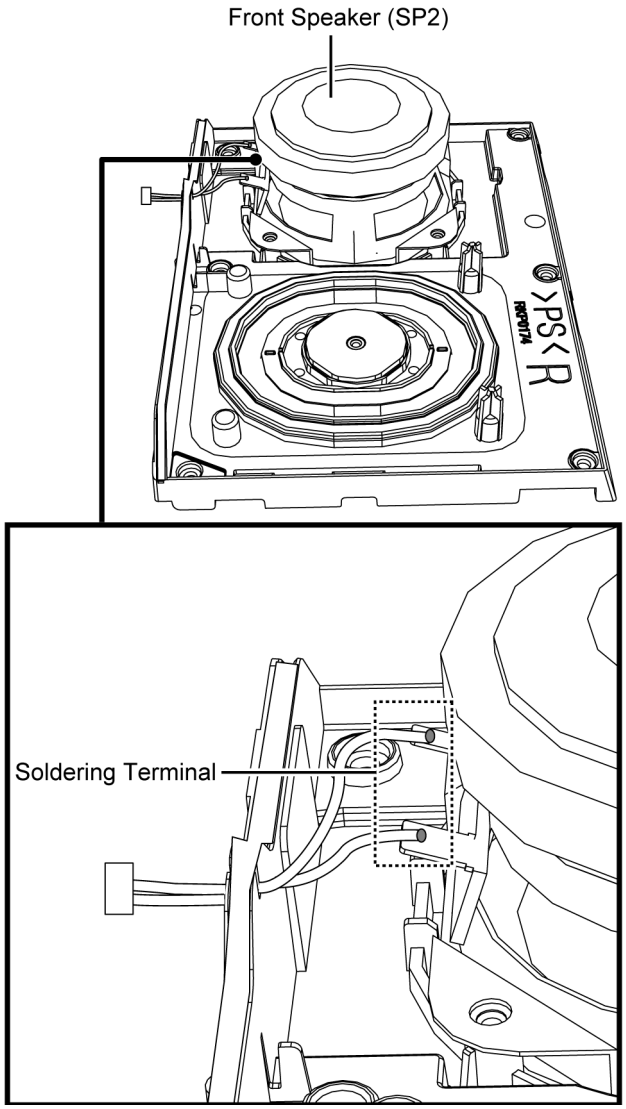

10.34. Disassembly of Passive Radiator Unit (SP3 & SP4)

Note : Passive Radiator Unit (SP3 & SP4) have the same mechanical structure. For disassembling of Passive Radiator Unit (SP4), repeat the (Step 1) to (step 3) of 10.34.
Below illustrated Passive Radiator Unit (SP3)

- Refer to “Disassembly of Base Stand Assembly”
- Refer to “Disassembly of Door Assembly”
- Refer to “Disassembly of Front Ornament Unit”
- Refer to “Disassembly of Front Panel Block”
- Refer to (Step 1) - (Step 4) of item 10.22.
- Refer to (Step 1) - (Step 3) of item 10.25.
- Refer to “Disassembly of CD Mechanism”
- Refer to (Step 1) - (Step 4) of item 10.32.

Step 1 : Remove 2 screws.
Step 2 : Slightly lift up the Passive Radiator Unit (SP3) as shown.
Caution : During assembling, ensure the Passive Radiator Unit (SP3) is seated under the guides of the cabinet as shown.

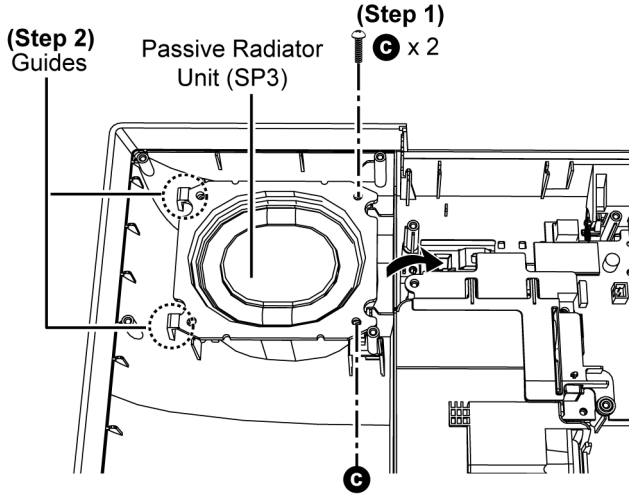

Step 3 : Remove the Passive Radiator Unit (SP3).

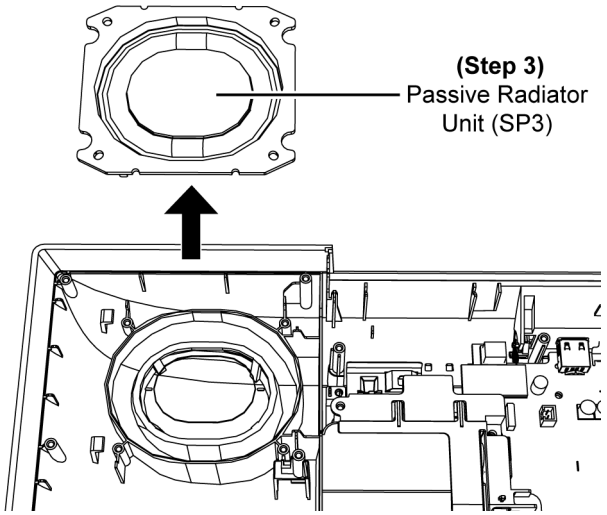

11 Service Position

Note: For description of the disassembly procedures, see the Section 10

11.1. Checking & Repairing of SMPS P.C.B.

Step 1 : Remove the Base Stand Assembly.
Step 2 : Remove the Door Assembly.
Step 3 : Remove the Front Ornament Unit.
Step 4 : Remove the Front Panel Block.
Step 5 : Remove the SMPS P.C.B..
Step 6 : Use a tape to keep the centre switch (S643) pressed.

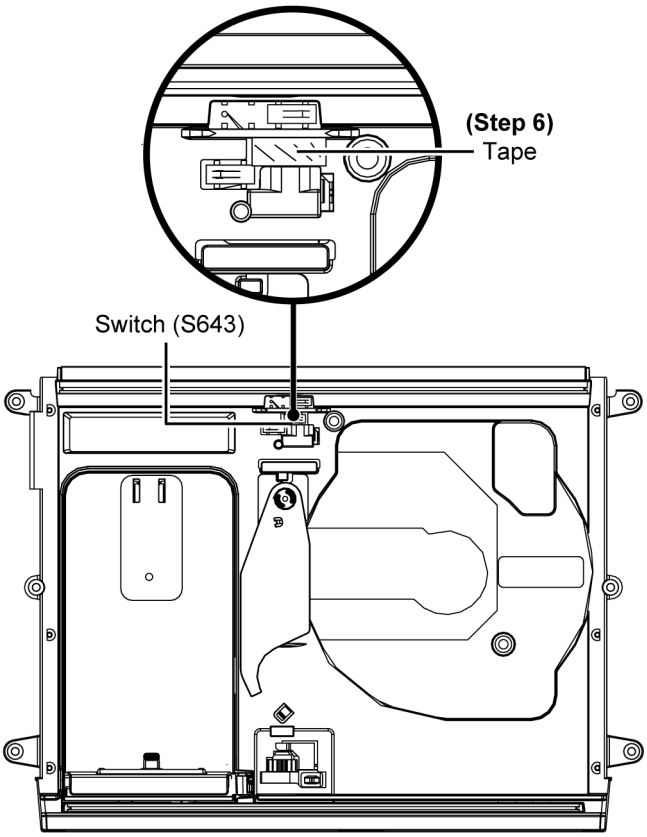

Step 7 : Place a Support Block to support the Front Panel Block as shown.

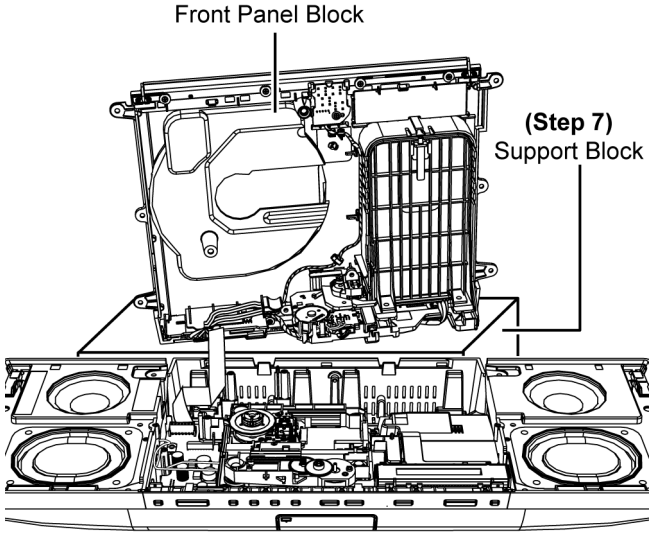

Step 8 : Connect 16P FFC at the connector (CN941) on Remote Sensor P.C.B..

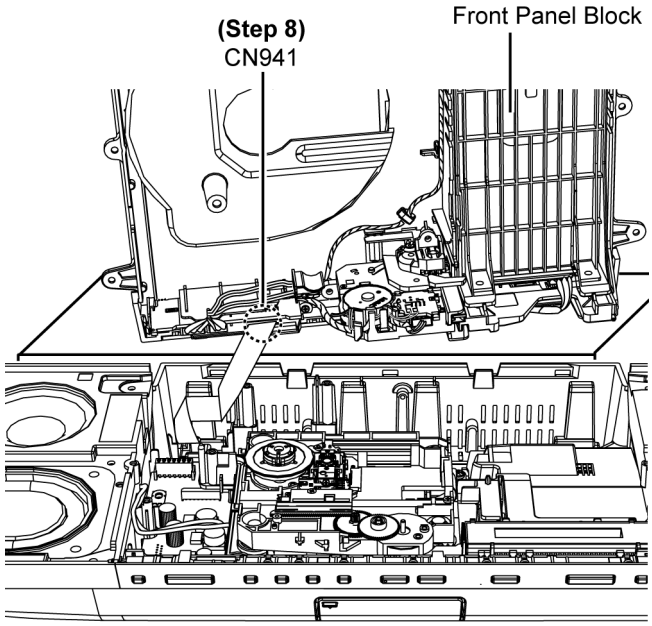

Step 9 : Place the SMPS P.C.B. on the Insulating Material.
Step 10 : Connect 7P extension cable (REX1538) from P1700 on the SMPS P.C.B. to CN1100 on the Main P.C.B..

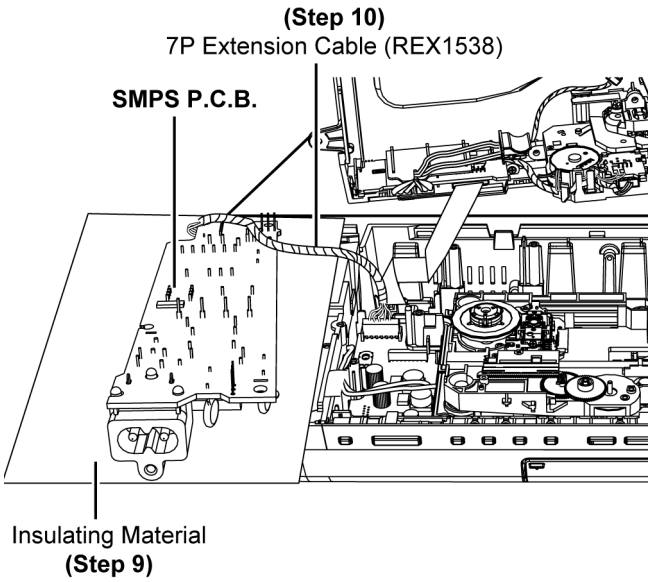

Step 11 : Check and repair the SMPS P.C.B. according to the diagram shown.

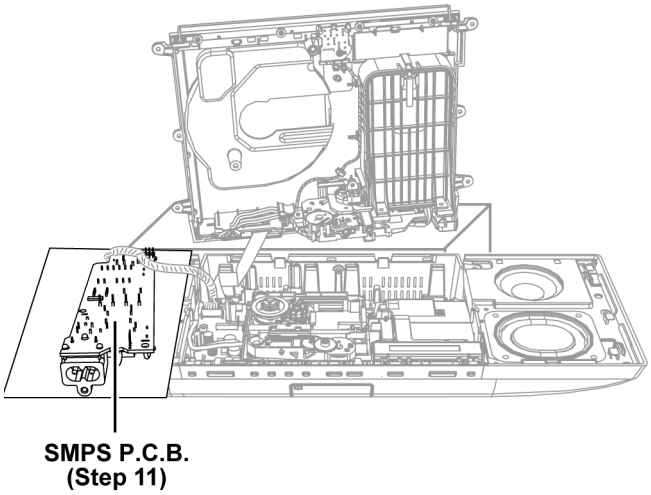

11.2. Checking & Repairing of Panel P.C.B.

Step 1 : Remove the Base Stand Assembly.
Step 2 : Remove the Door Assembly.
Step 3 : Remove the Front Ornament Unit.
Step 4 : Remove the Front Panel Block.
Step 5 : Remove 1 screw.
Step 6 : Lift up the Panel P.C.B. with Button Ornament Unit as shown.

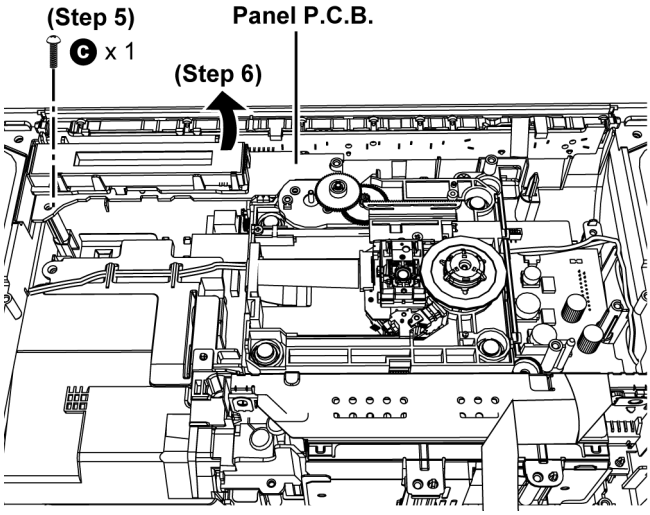

Step 7 : Place the Panel P.C.B. on the Support Block.

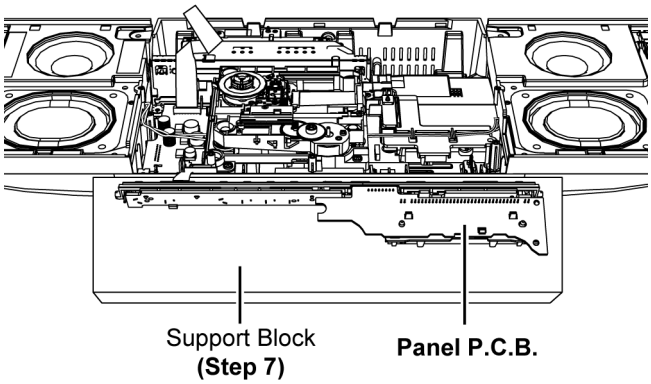

Step 8 : Use a tape to keep the centre switch (S643) pressed.

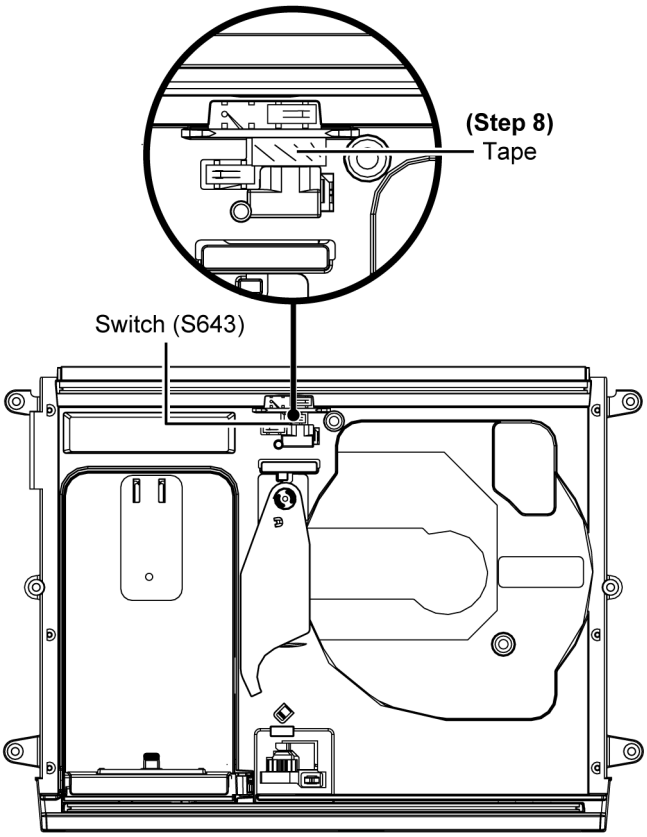

Step 9 : Place the Support Block to support the Front Panel Block as shown.

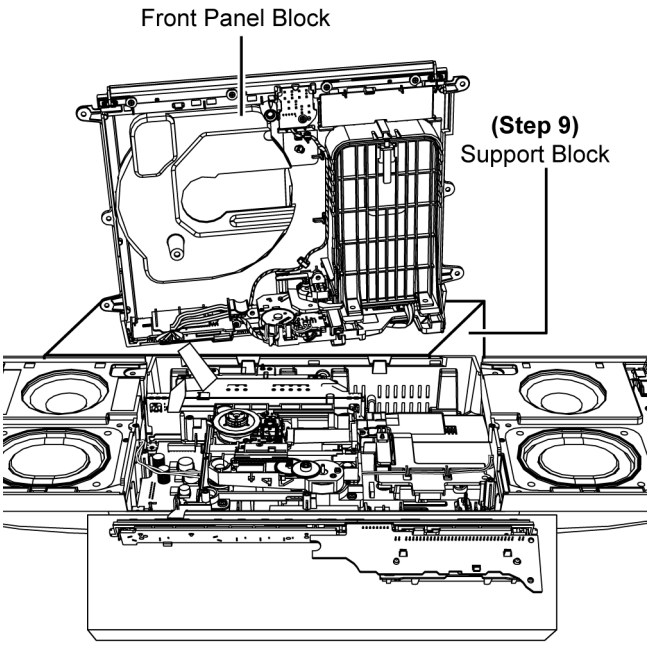

Step 10 : Connect 16P FFC at the connector (CN941) on Remote Sensor P.C.B..

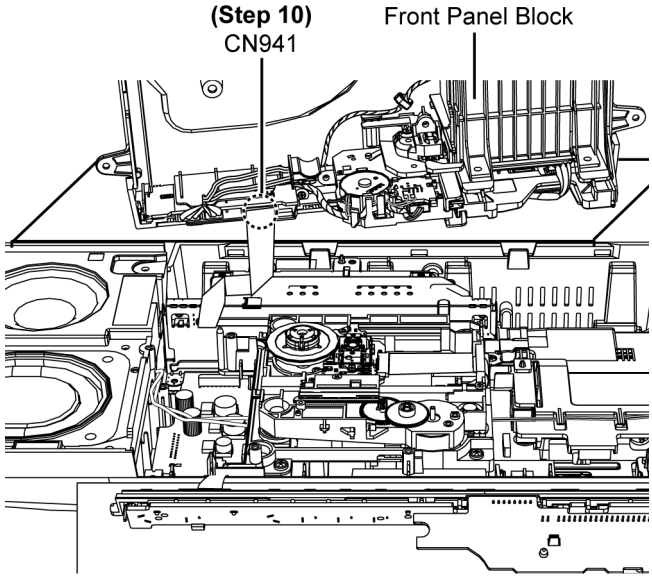

Step 11 : Check and repair the Panel P.C.B. according to the diagram shown.

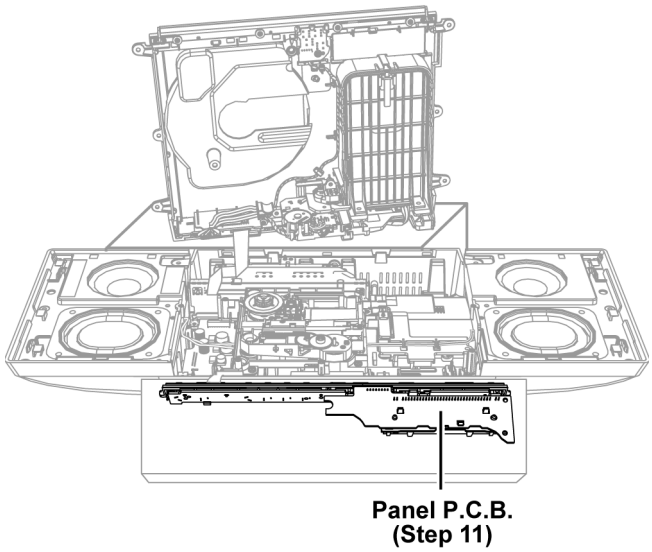

11.3. Checking & Repairing of CD Servo P.C.B.

Note : Insert CD before Checking CD Servo P.C.B.

Step 1 : Remove the Base Stand Assembly.
Step 2 : Remove the Door Assembly.
Step 3 : Remove the Front Ornament Unit.
Step 4 : Remove the Front Panel Block.
Step 5 : Remove the SMPS Unit.
Step 6 : Remove the Panel P.C.B. & Button Ornament Unit.
Step 7 : Remove the CD Mechanism.
Step 8 : Place the Panel P.C.B. on the Support Block.
Step 9 : Connect 15P FFC at the connector (CN900) on the Button P.C.B..

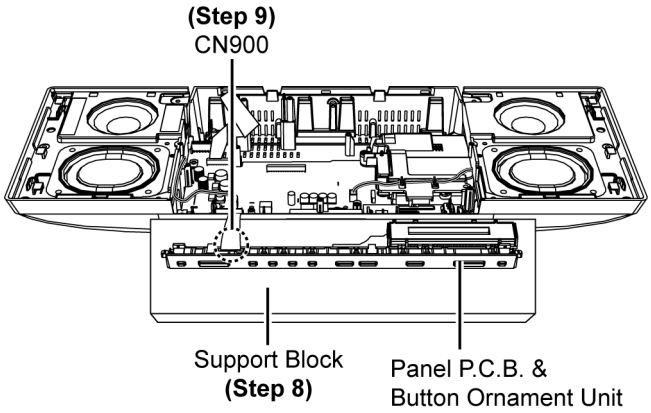

Step 10 : Place the SMPS Unit on the Insulating Material.
Step 11 : Connect 7P extension cable (REX1538) from P1700 on the SMPS P.C.B. to CN1100 on the Main P.C.B..

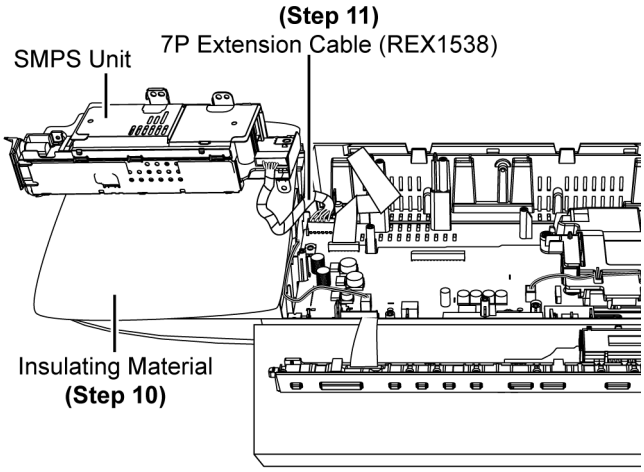

Step 12 : Use a tape to keep the centre switch (S643) pressed.

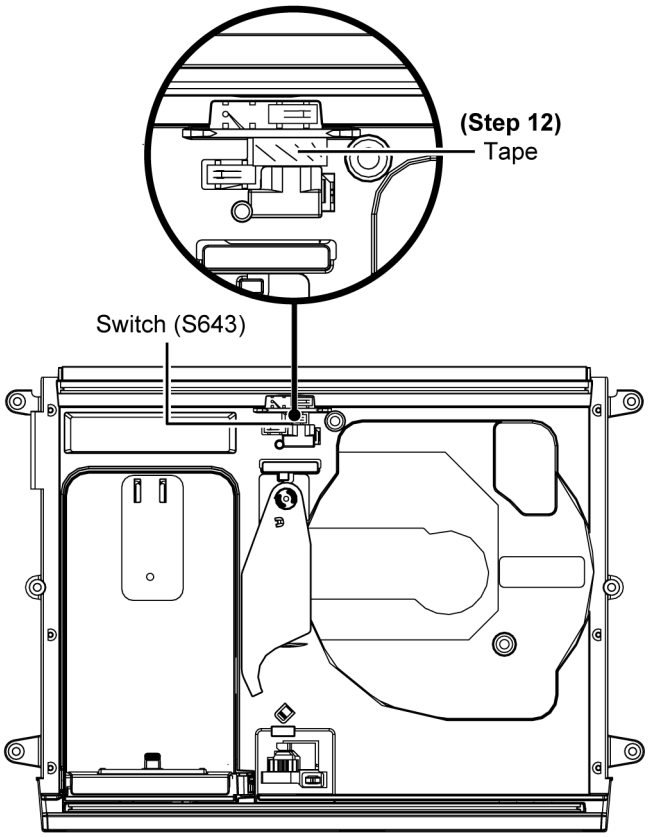

Step 13 : Place a Support Block to support the Front Panel Block as shown.

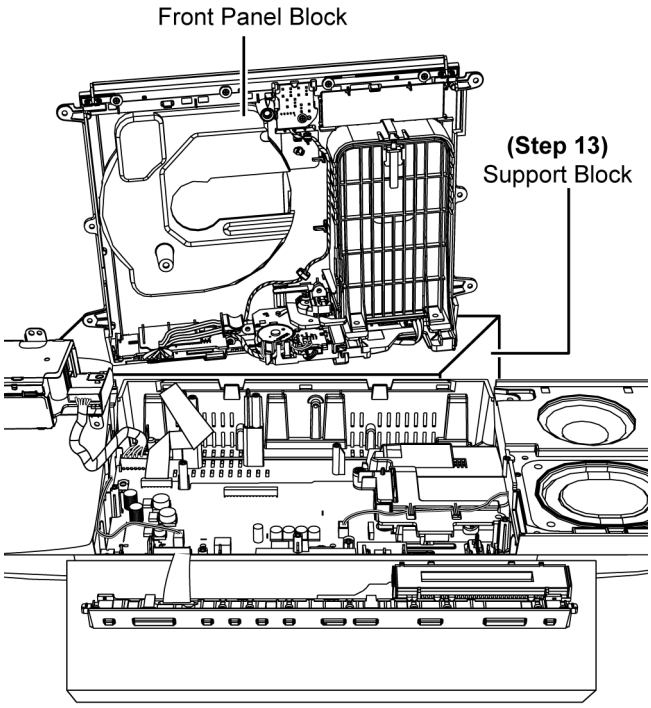

Step 14 : Connect 16P FFC at the connector (CN941) on Remote Sensor P.C.B..

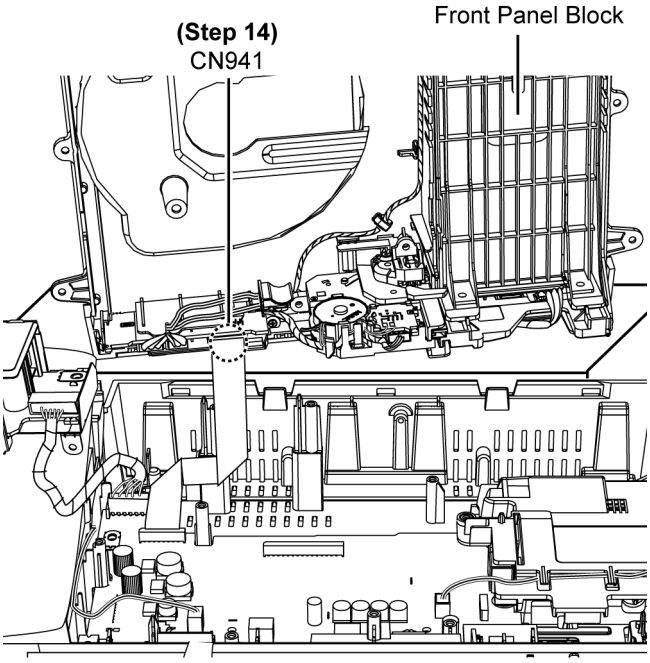

Step 15 : Place the CD Mechanism on the Insulating Material.

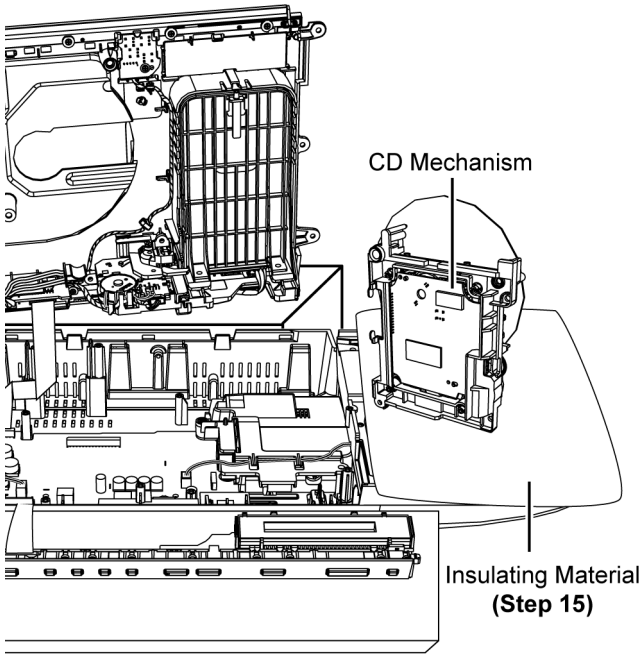

Step 16 : Connect 30P extension cable (REE1712) from CN6006 on the Main P.C.B. to CN7002 on the CD Servo P.C.B..

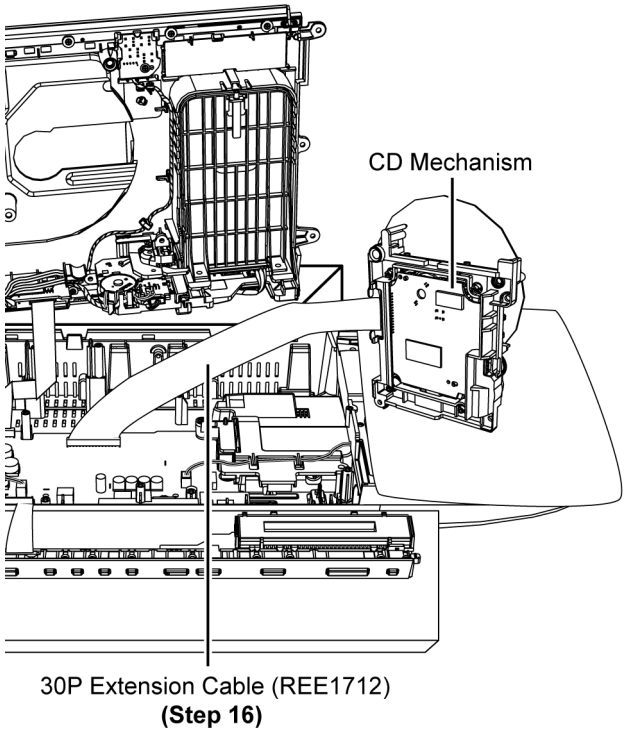

Step 17 : Check and repair the CD Servo P.C.B. according to the diagram shown.

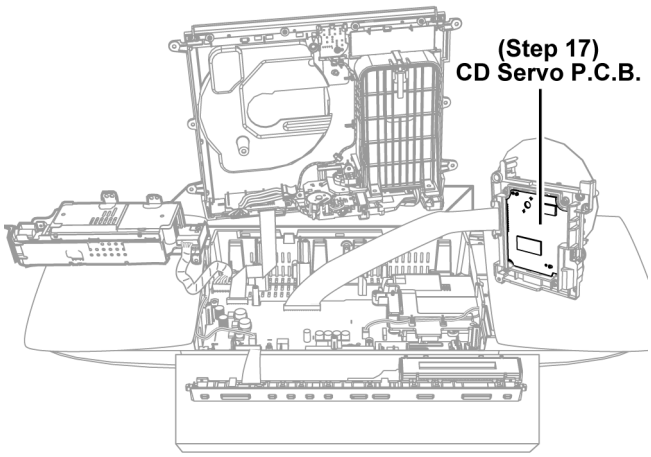

11.4. Checking & Repairing of Main P.C.B. (Side B)

- Refer to (Step 1) - (Step 16) of item 11.3.

Step 1 : Check and repair the Main P.C.B. (Side B) according to the diagram shown.

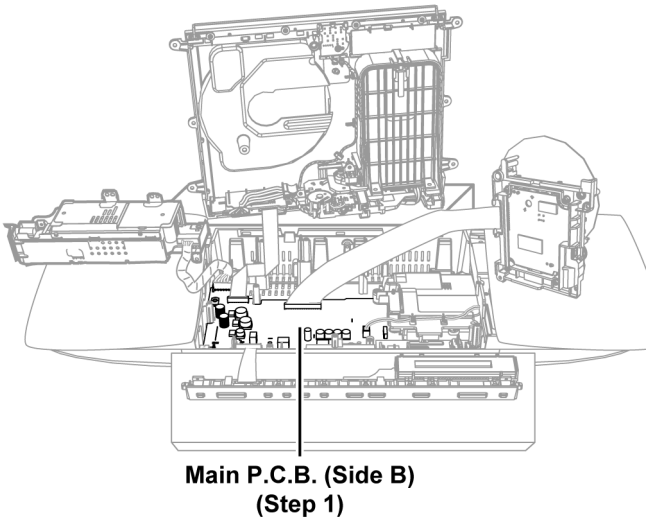

11.5. Checking & Repairing of Main P.C.B. (Side A)

Step 1 : Remove the Base Stand Assembly.
Step 2 : Remove the Door Assembly.
Step 3 : Remove the Front Ornament Unit.
Step 4 : Remove the Front Panel Block.
Step 5 : Remove the SMPS Unit.
Step 6 : Remove the Panel P.C.B. & Button Ornament Unit.
Step 7 : Remove the CD Mechanism.
Step 8 : Remove the Main P.C.B..
Step 9 : Place the Main P.C.B. (Side A) on the Insulating Material.

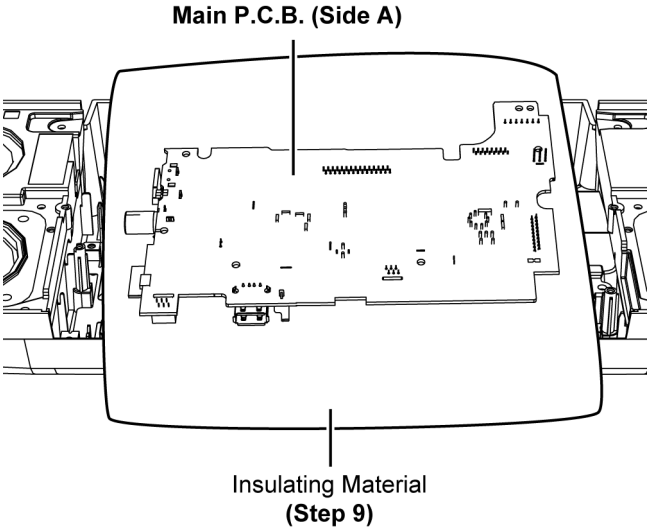

Step 10 : Connect 2P wire at the connector (CN401) on the Main P.C.B..
Step 11 : Connect 2P wire at the connector (CN400) on the Main P.C.B..

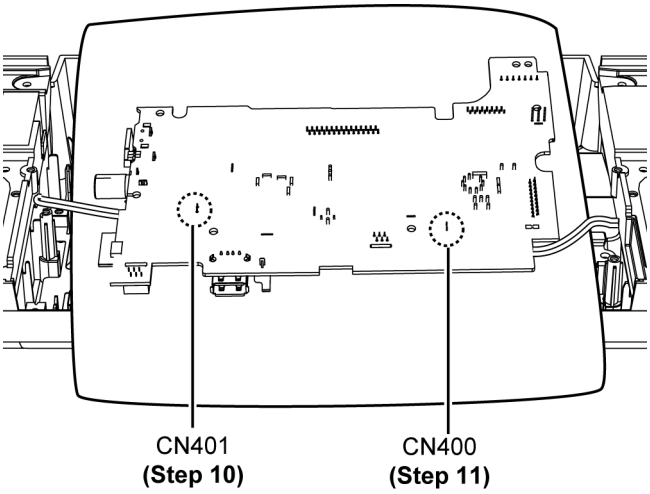

Step 12 : Connect 15P FFC at the connector (CN900) on the Button P.C.B..

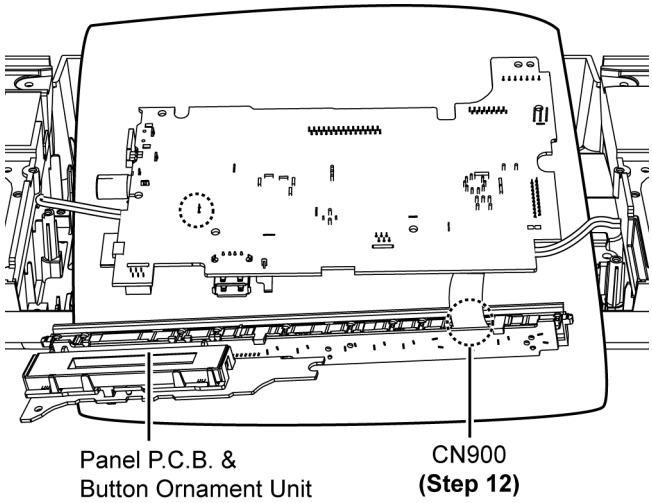

Step 13 : Place the SMPS Unit on the Insulating Material.
Step 14 : Connect 7P extension cable (REX1538) from P1700 on the SMPS P.C.B. to CN1100 on the Main P.C.B..

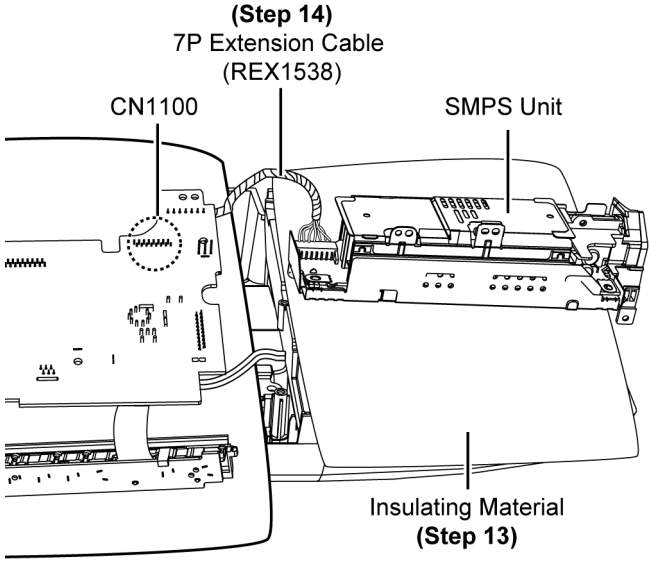

Step 15 : Place the CD Mechanism on the Insulating Material.
Step 16 : Connect 30P extension cable (REE1712) from CN6006 on the Main P.C.B. to CN7002 on the CD Servo P.C.B..

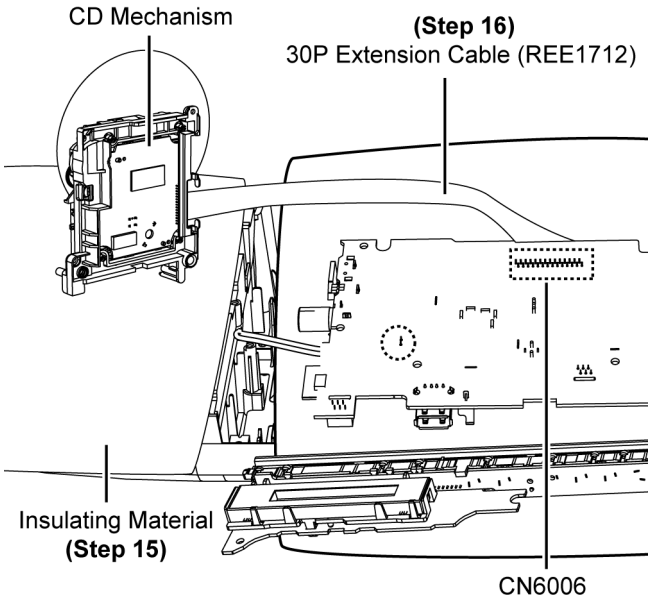

Step 17 : Use a tape to keep the centre switch (S643) pressed.

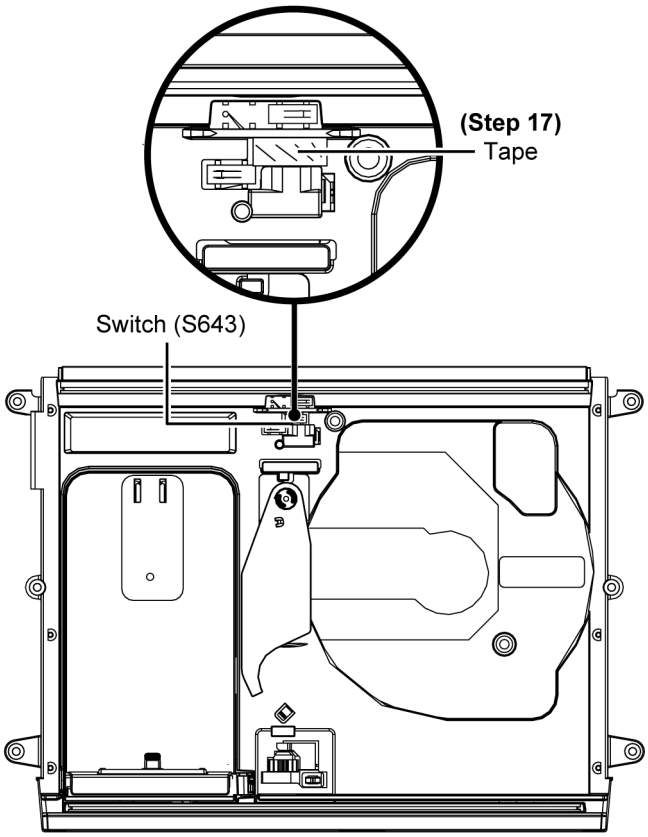

Step 18 : Place a Support Block to support the Front Panel Block as shown.
Step 19 : Connect 16P FFC at the connector (CN941) on Remote Sensor P.C.B..

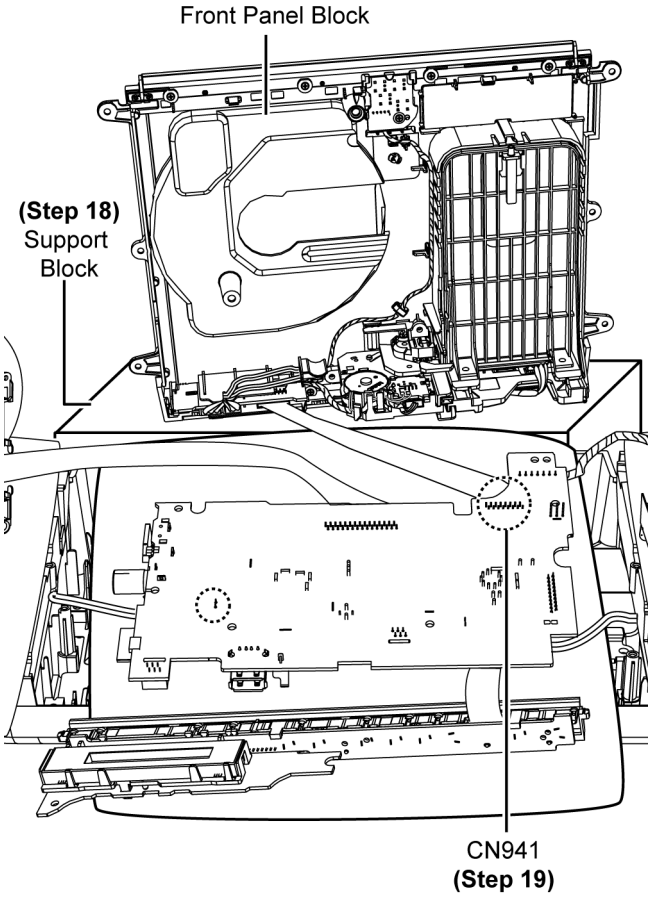

Step 20 : Check and repair the Main P.C.B. (Side A) according to the diagram shown..

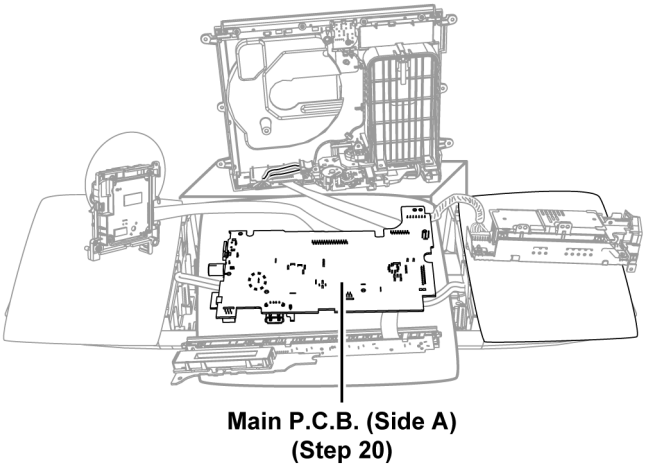

12 Block Diagram

12.1. SERVO & SYSTEM CONTROL (1/2) BLOCK DIAGRAM

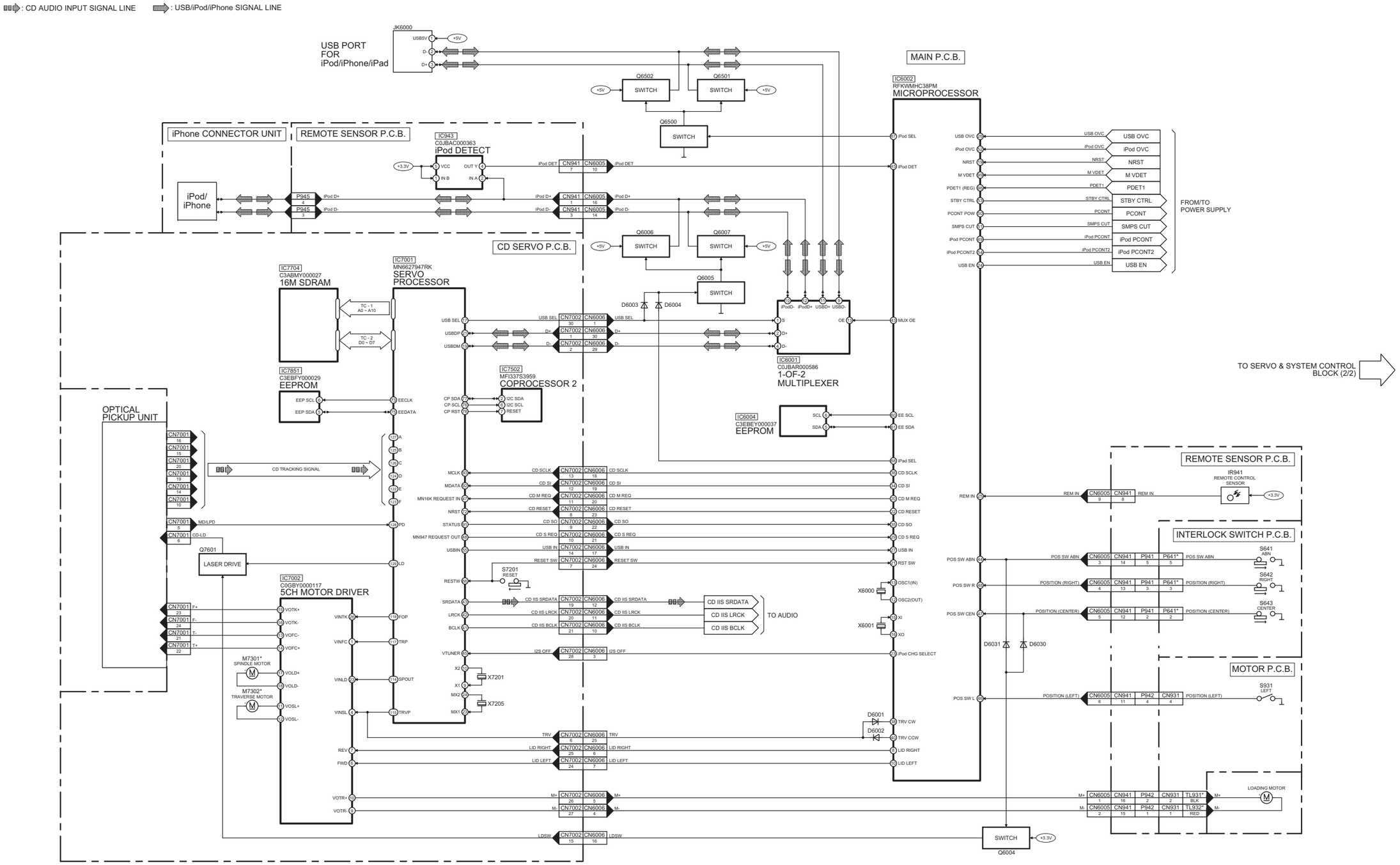

NOTE: “ * ” REF IS FOR INDICATION ONLY

SC-HC38P SERVO & SYSTEM CONTROL (1/2) BLOCK DIAGRAM

12.2. SERVO & SYSTEM CONTROL (2/2) BLOCK DIAGRAM

: CD AUDIO INPUT SIGNAL LINE : USB/iPod/iPhone SIGNAL LINE

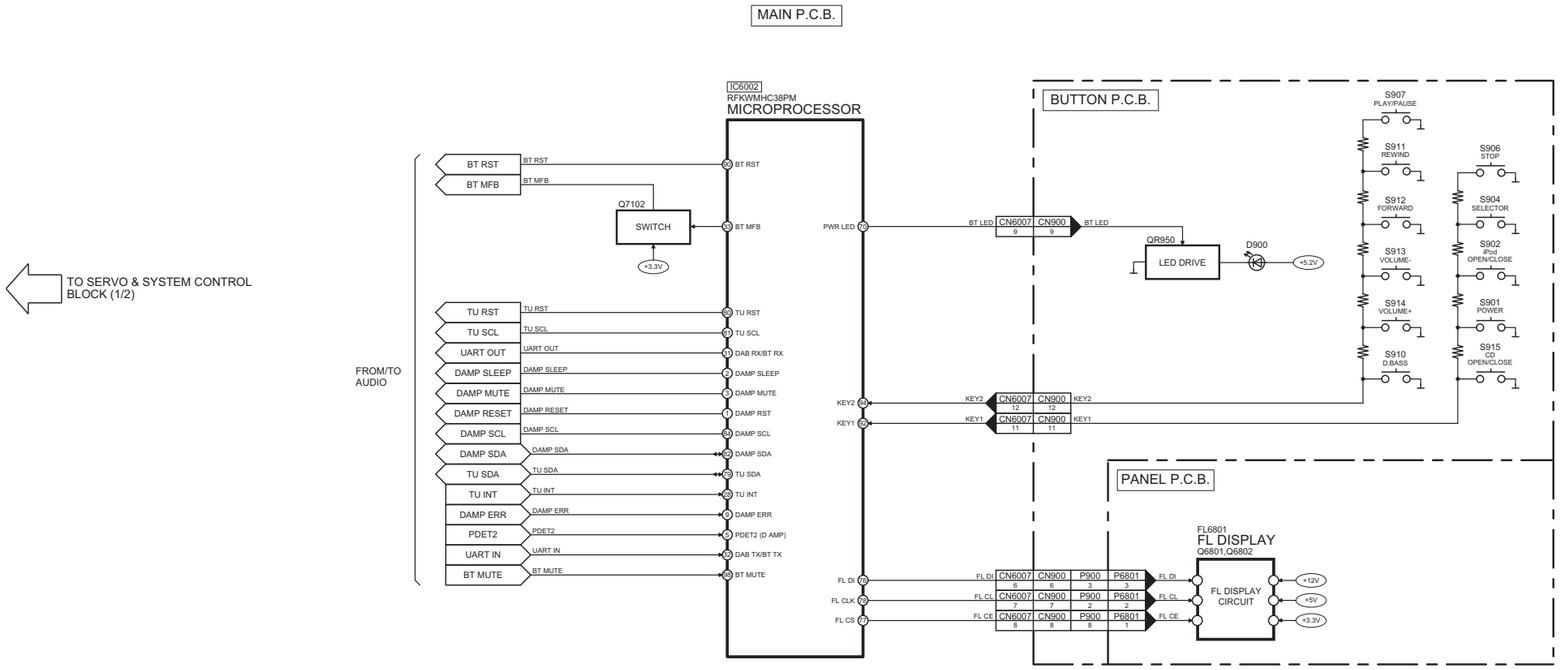

SC-HC38P SERVO & SYSTEM CONTROL (2/2) BLOCK DIAGRAM

12.3. IC TERMINAL CHART

TC	IC7704 16M SDRAM		SIGNAL NAME	IC7001 SERVO PROCESSOR	
	PORT NAME	PIN NO		PIN NO	PORT NAME
1	A0	21	A0	35	A0
	A1	22	A1	34	A1
	A2	23	A2	33	A2
	A3	24	A3	112	A3
	A4	27	A4	111	A4
	A5	28	A5	110	A5
	A6	29	A6	109	A6
	A7	30	A7	108	A7
	A8	31	A8	107	A8
	A9	32	A9	106	A9
	A10	20	A10	36	A10

TC	IC7704 16M SDRAM		SIGNAL NAME	IC7001 SERVO PROCESSOR	
	PORT NAME	PIN NO		PIN NO	PORT NAME
2	DQ0 / DQ15	2 / 49	D0	102	D0
	DQ1 / DQ14	3 / 48	D1	101	D1
	DQ2 / DQ13	5 / 46	D2	100	D2
	DQ3 / DQ12	6 / 45	D3	99	D3
	DQ4 / DQ11	8 / 43	D4	98	D4
	DQ5 / DQ10	9 / 42	D5	97	D5
	DQ6 / DQ9	11 / 40	D6	96	D6
	DQ7 / DQ8	12 / 39	D7	95	D7

12.4. AUDIO BLOCK DIAGRAM

: CD AUDIO INPUT SIGNAL LINE : TUNER AUDIO INPUT SIGNAL LINE : AUDIO OUTPUT SIGNAL LINE : FM SIGNAL LINE

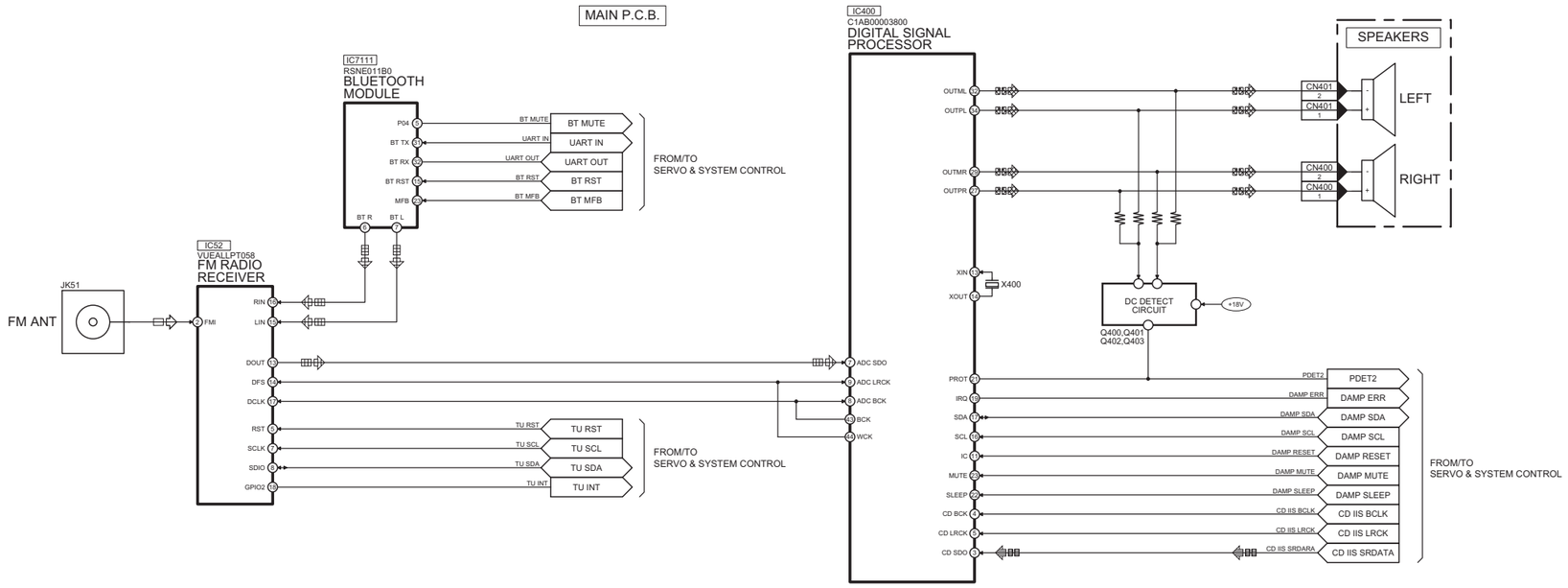

SC-HC38P AUDIO BLOCK DIAGRAM

12.5. POWER SUPPLY (1/2) BLOCK DIAGRAM

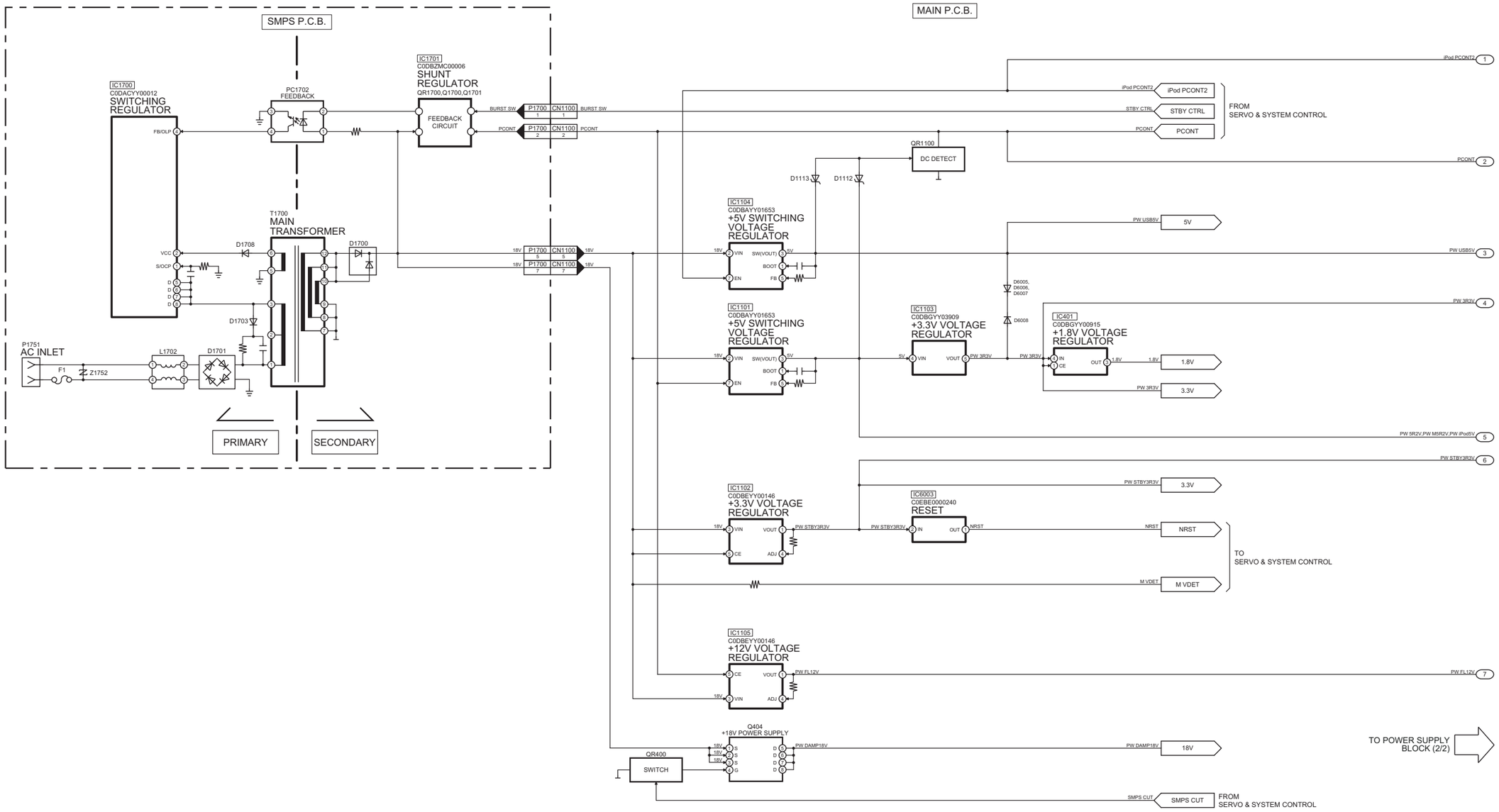

SC-HC38P POWER SUPPLY (1/2) BLOCK DIAGRAM

12.6. POWER SUPPLY (2/2) BLOCK DIAGRAM

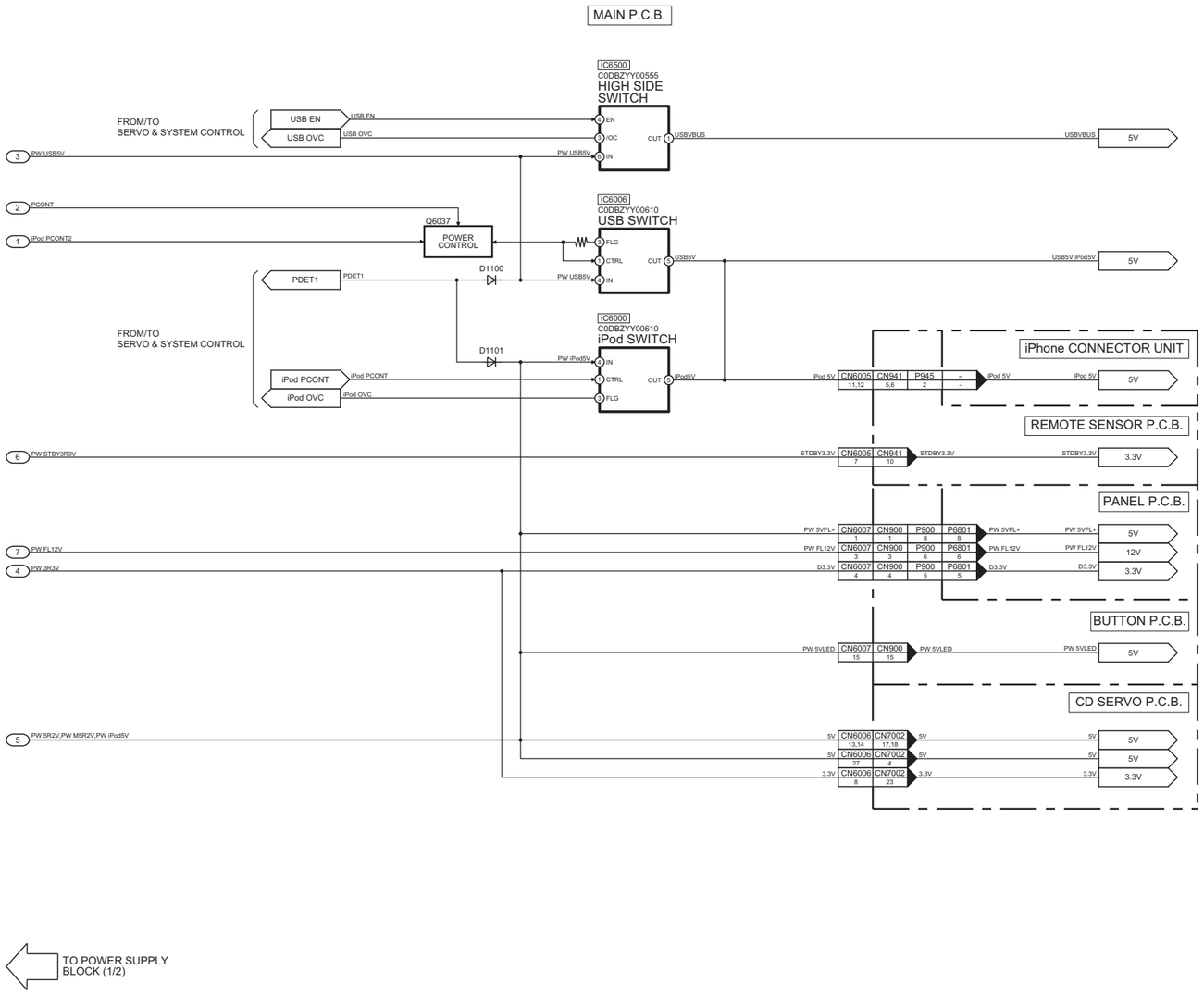

SC-HC38P POWER SUPPLY (2/2) BLOCK DIAGRAM

13 Wiring Connection Diagram

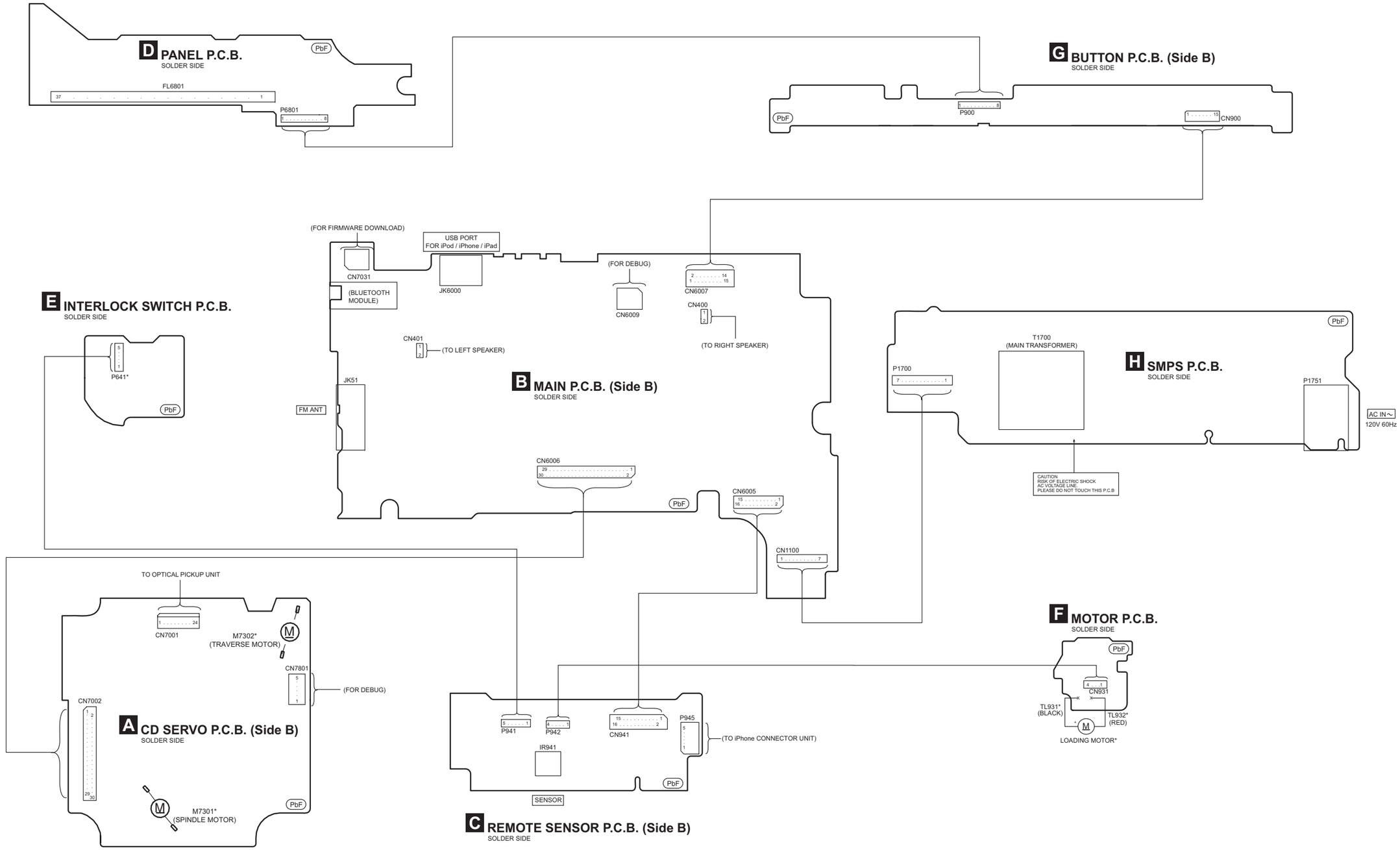

Note : “ * ” REF IS FOR INDICATION ONLY.

SC-HC38P
WIRING CONNECTION DIAGRAM

14 Schematic Diagram

14.1. Schematic Diagram Notes

(All schematic diagrams may be modified at any time with the development of new technology)

Notes:

S641:	ABN switch.
S642:	RIGHT switch.
S643:	CENTRE switch.
S901:	POWER switch (⏻/I).
S902:	iPod OPEN/CLOSE switch (iPod ⏏).
S904:	SELECTOR switch.
S906:	STOP switch (■).
S907:	PLAY/PAUSE switch (▶/❚❚).
S910:	DBASS switch.
S911:	REV SKIP switch (|◀◀/◀◀).
S912:	FWD SKIP switch (▶▶/▶▶|).
S913:	VOL- switch.
S914:	VOL+ switch.
S915:	CD OPEN/CLOSE switch(CD ⏏).
S931:	LEFT switch.
S7201:	RESET switch.

- Important safety notice:

  Components identified by ⚠ mark have special characteristics important for safety.
  Furthermore, special parts which have purposes of fire-retardant (resistors), high quality sound (capacitors), low-noise (resistors), etc are used.
  When replacing any of components, be sure to use only manufacturer's specified parts shown in the parts list.

- In case of AC rated voltage Capacitors, the part no. and values will be indicated in the Schematic Diagram.
  AC rated voltage capacitors:
  C1702, C1710, C1725, C1727, C1728

- **Resistor**
  Unit of resistance is OHM [Ω] (K=1,000, M=1,000,000).

- **Capacitor**
  Unit of capacitance is μF, unless otherwise noted. F=Farads, pF=pico-Farad.

- **Coil**
  Unit of inductance is H, unless otherwise noted.

- *****

  REF IS FOR INDICATION ONLY.

- Voltage and signal line

: +B Signal Line

: -B Signal Line

: CD Audio Input Signal Line

: Bluetooth/Tuner Audio Input Signal Line

: Audio Output Signal Line

: iPod/iPhone/USB Signal Line

: FM Signal Line

CAUTION: FOR CONTINUED PROTECTION AGAINST FIRE HAZARD, REPLACE ONLY WITH SAME TYPE F1 T2A, 250V FUSE

RISK OF FIRE-REPLACE FUSE AS MARKED.

FUSE CAUTION

These symbols located near the fuse indicates that the fuse used is a fast operating type. For continued protection against fire harzard, replace with the same type fuse. For fuse rating, refer to the marking adjacent to the symbol.

14.2. CD SERVO CIRCUIT (1/2)

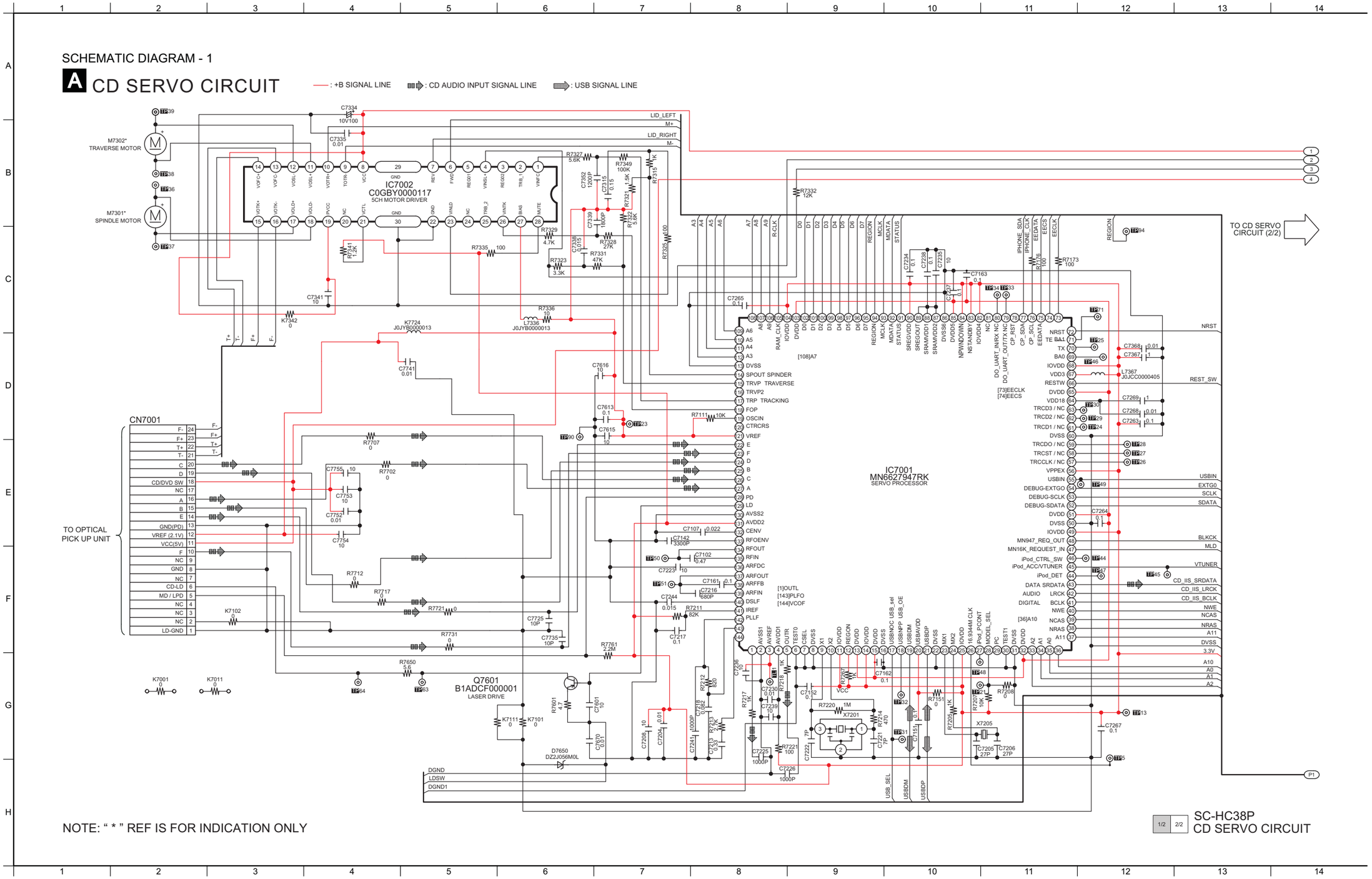

14.3. CD SERVO CIRCUIT (2/2)

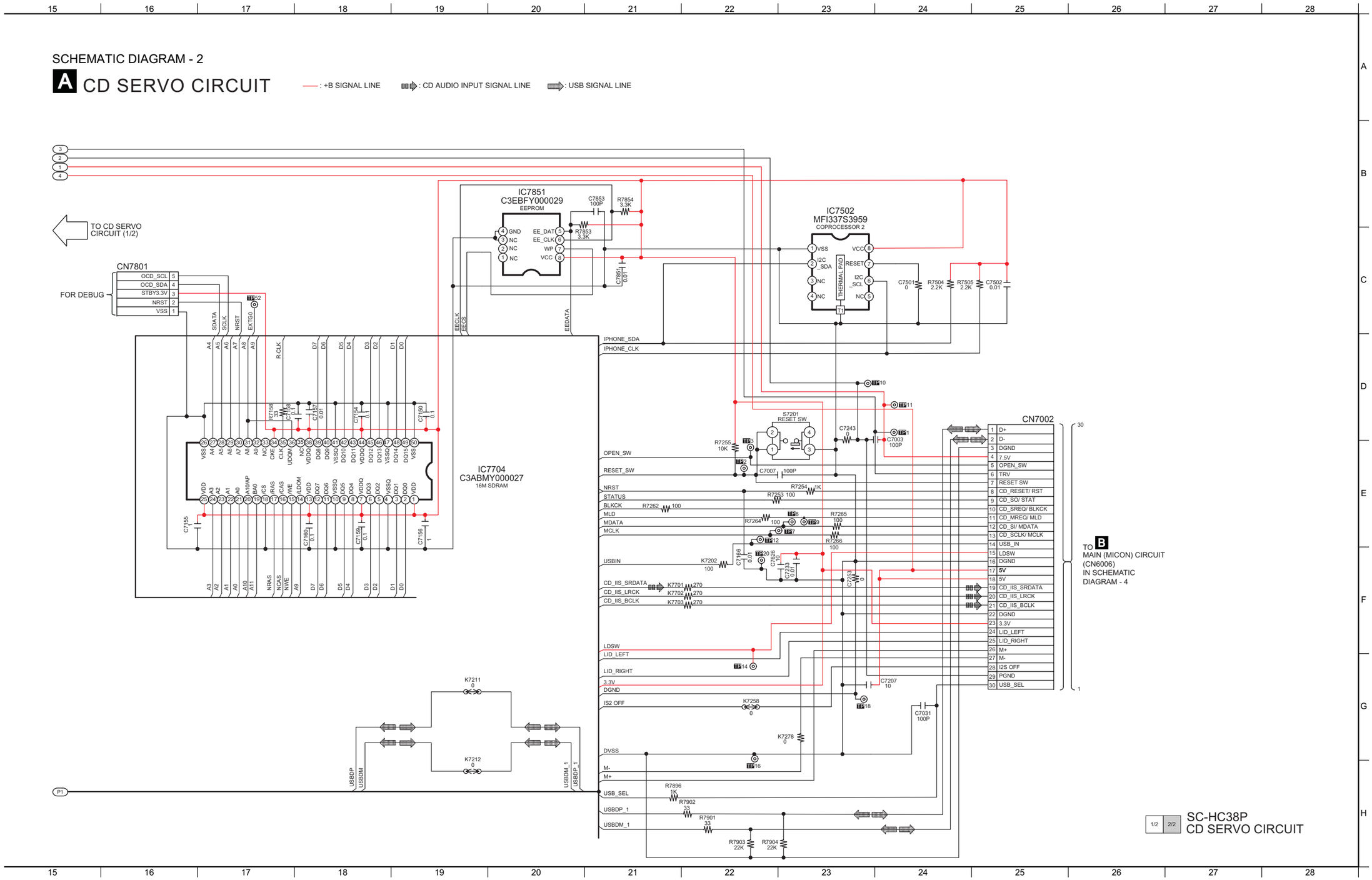

14.4. MAIN (MICON) CIRCUIT (1/4)

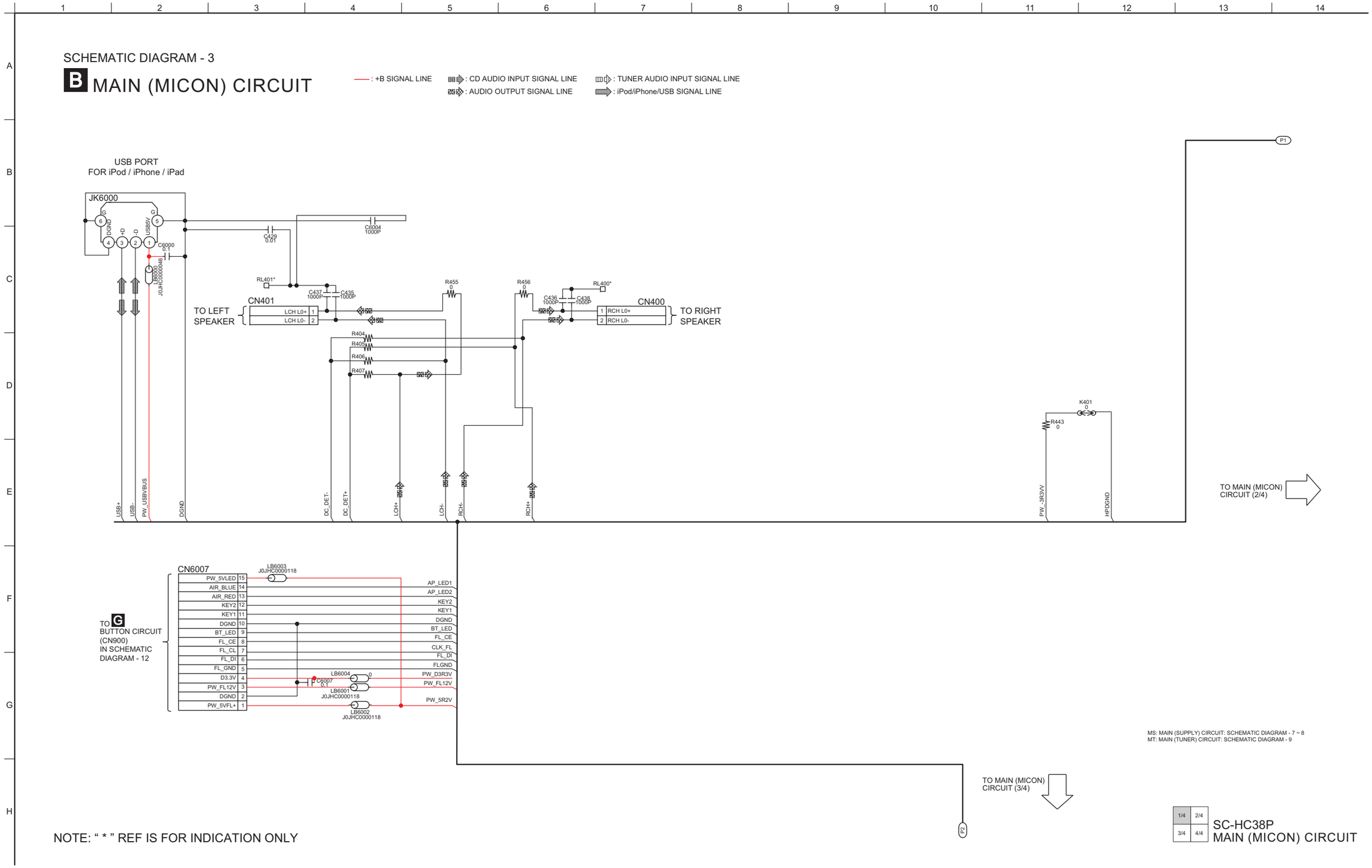

NOTE: " * " REF IS FOR INDICATION ONLY

14.5. MAIN (MICON) CIRCUIT (2/4)

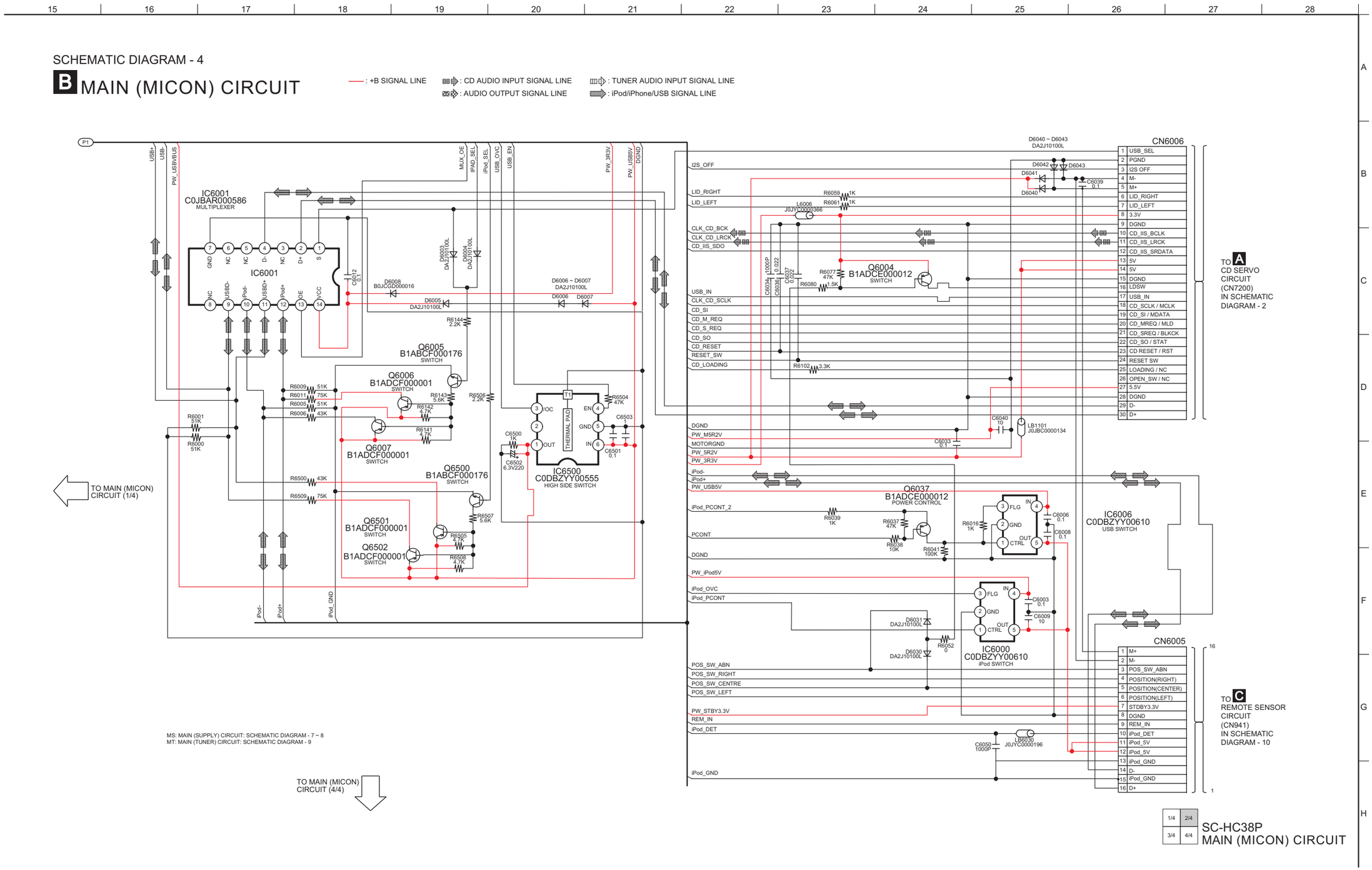

14.6. MAIN (MICON) CIRCUIT (3/4)

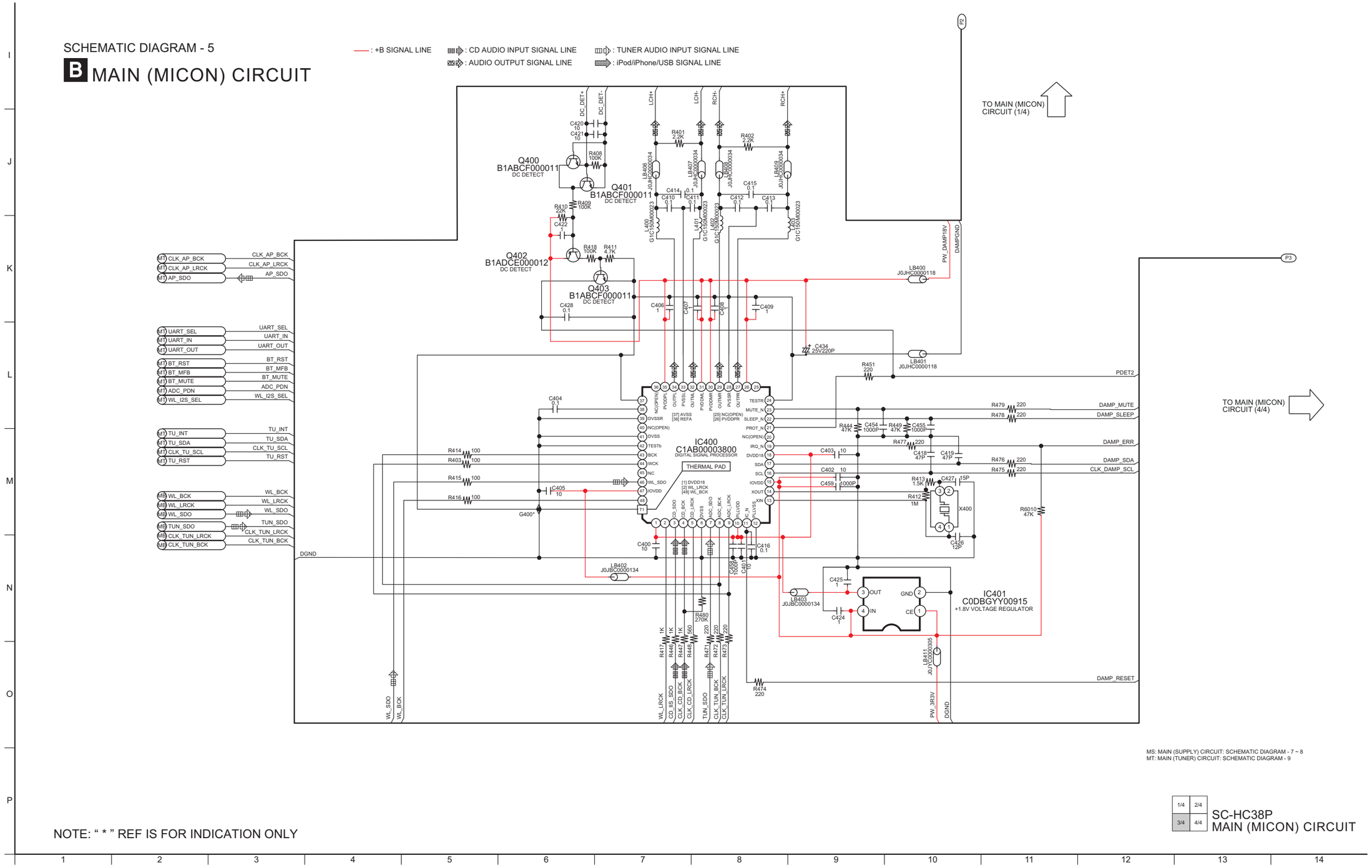

NOTE: " * " REF IS FOR INDICATION ONLY

14.7. MAIN (MICON) CIRCUIT (4/4)

SCHEMATIC DIAGRAM - 6

B MAIN (MICON) CIRCUIT

—— : +B SIGNAL LINE
: CD AUDIO INPUT SIGNAL LINE
: TUNER AUDIO INPUT SIGNAL LINE
: AUDIO OUTPUT SIGNAL LINE
: iPod/iPhone/USB SIGNAL LINE

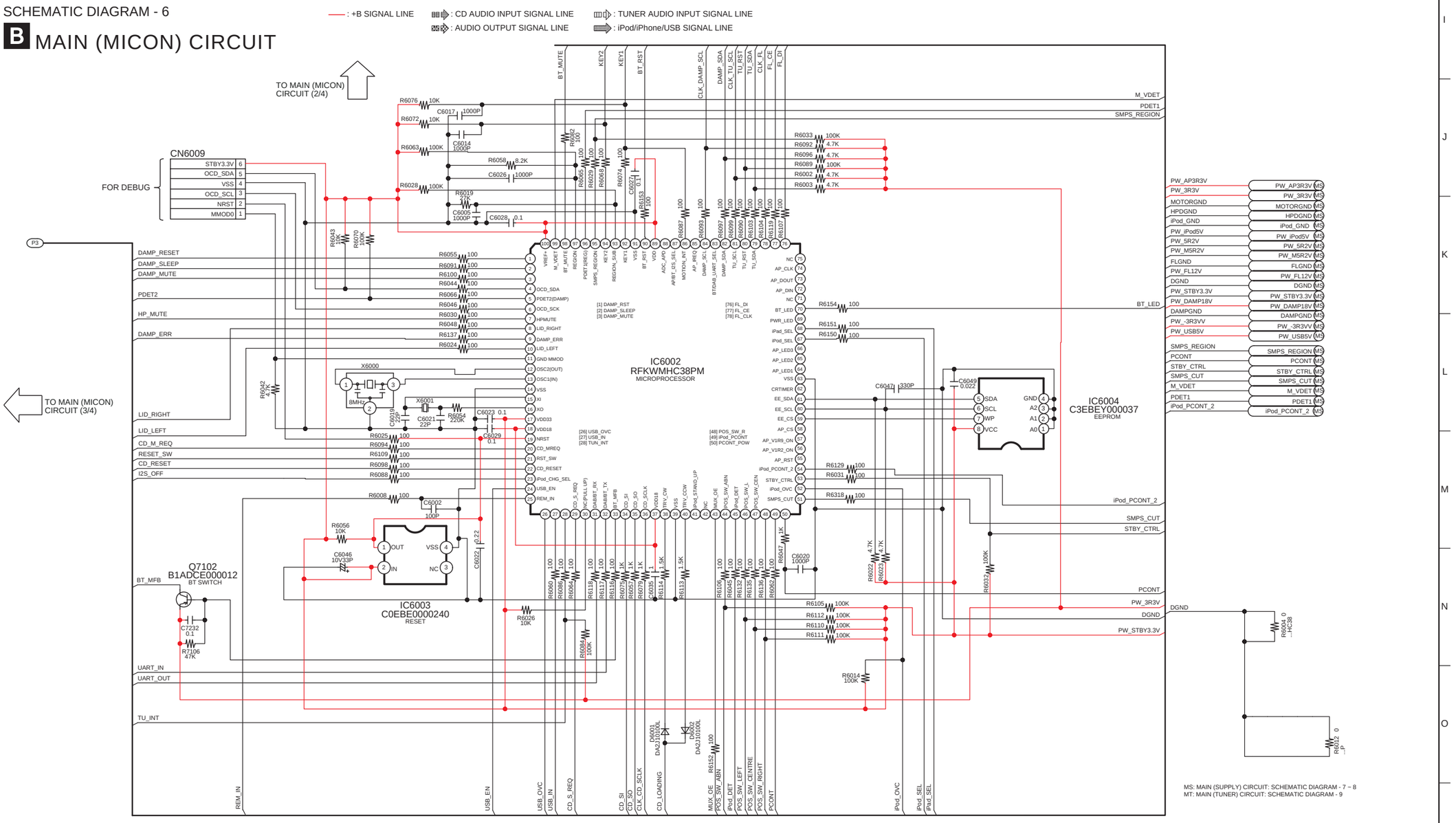

1/4	2/4
3/4	4/4

SC-HC38P
MAIN (MICON) CIRCUIT

NOTE: " * " REF IS FOR INDICATION ONLY

14.8. MAIN (SUPPLY) CIRCUIT (1/2)

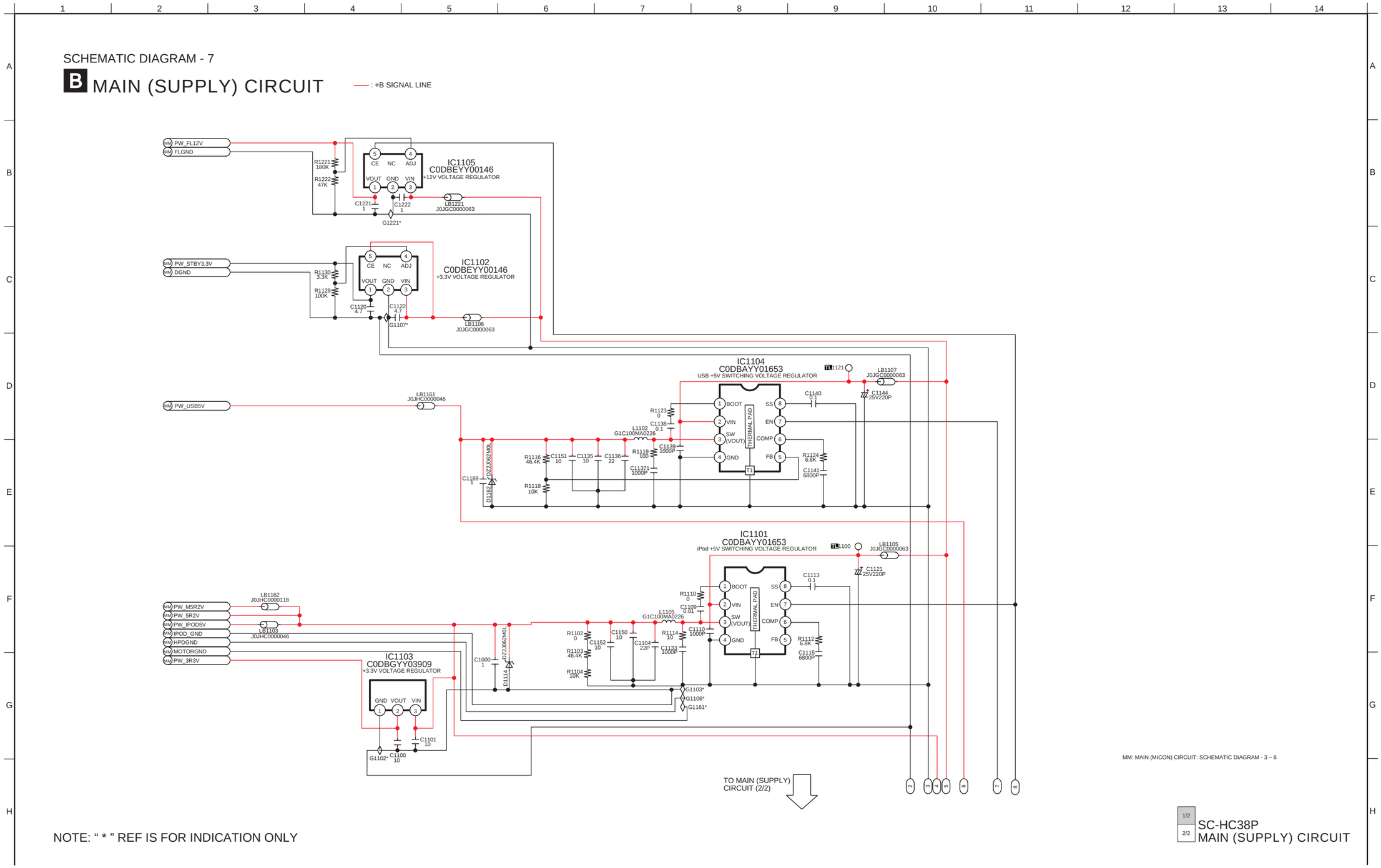

NOTE: " * " REF IS FOR INDICATION ONLY

14.9. MAIN (SUPPLY) CIRCUIT (2/2)

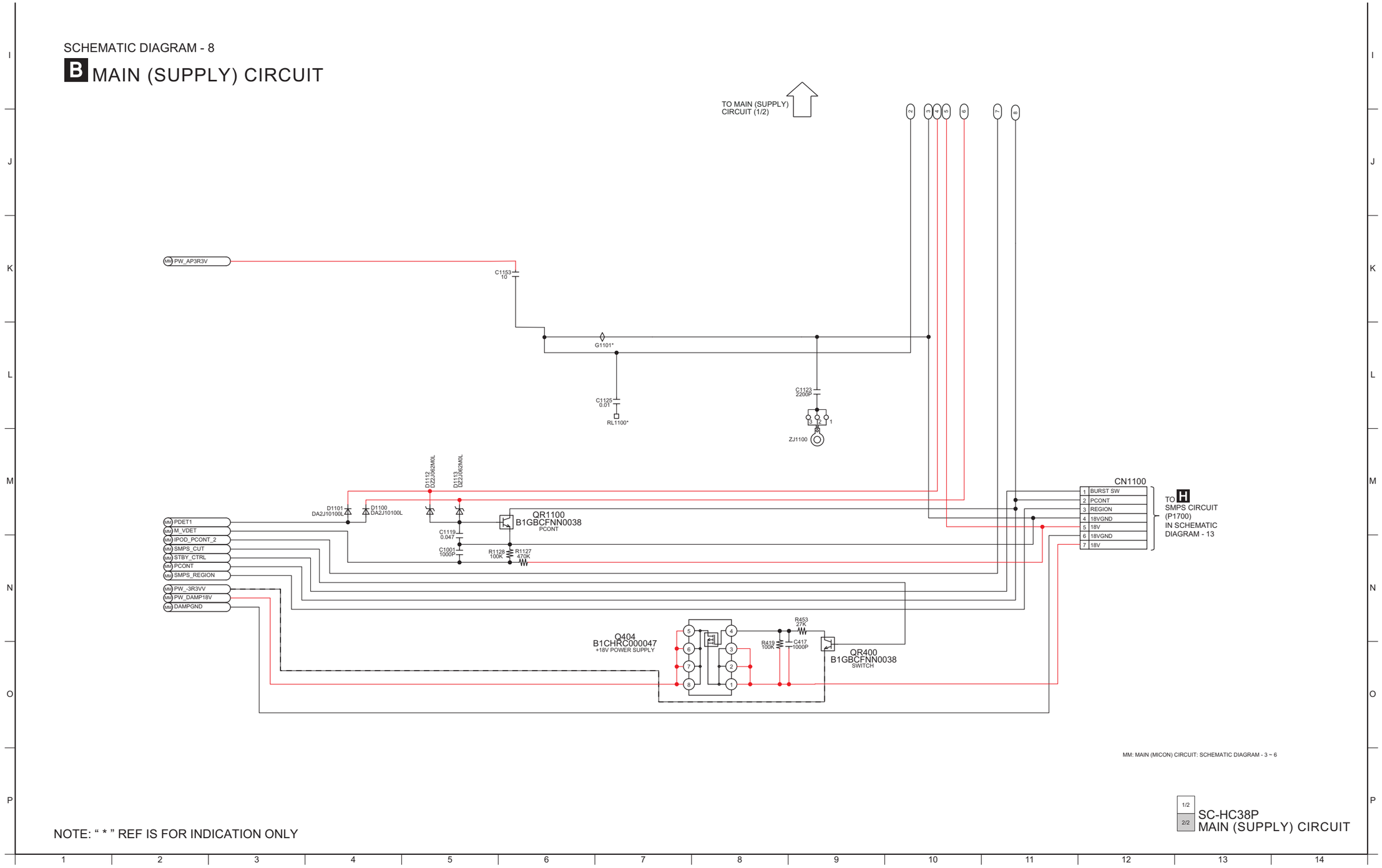

14.10. MAIN (TUNER) CIRCUIT

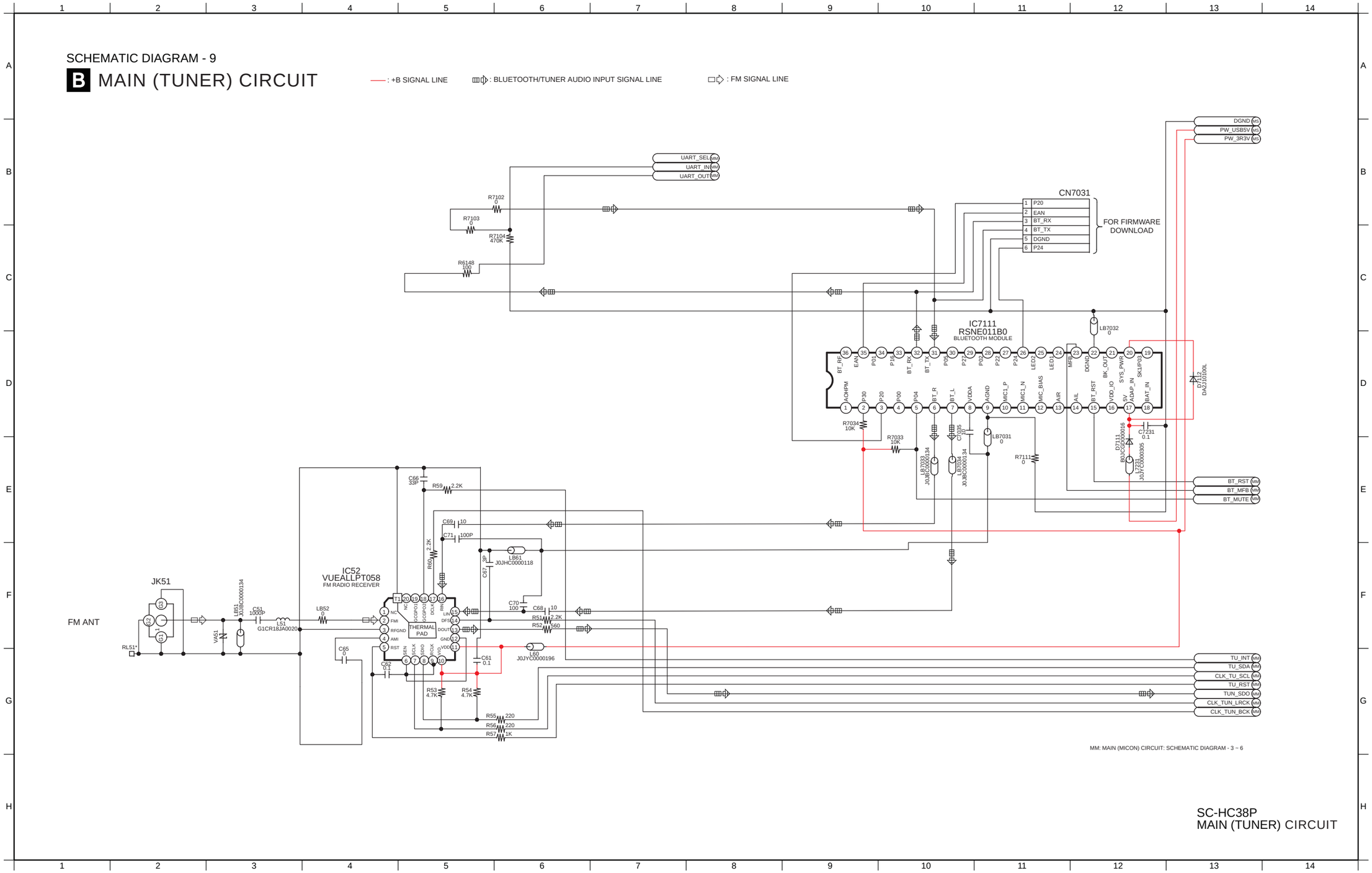

14.11. REMOTE SENSOR CIRCUIT

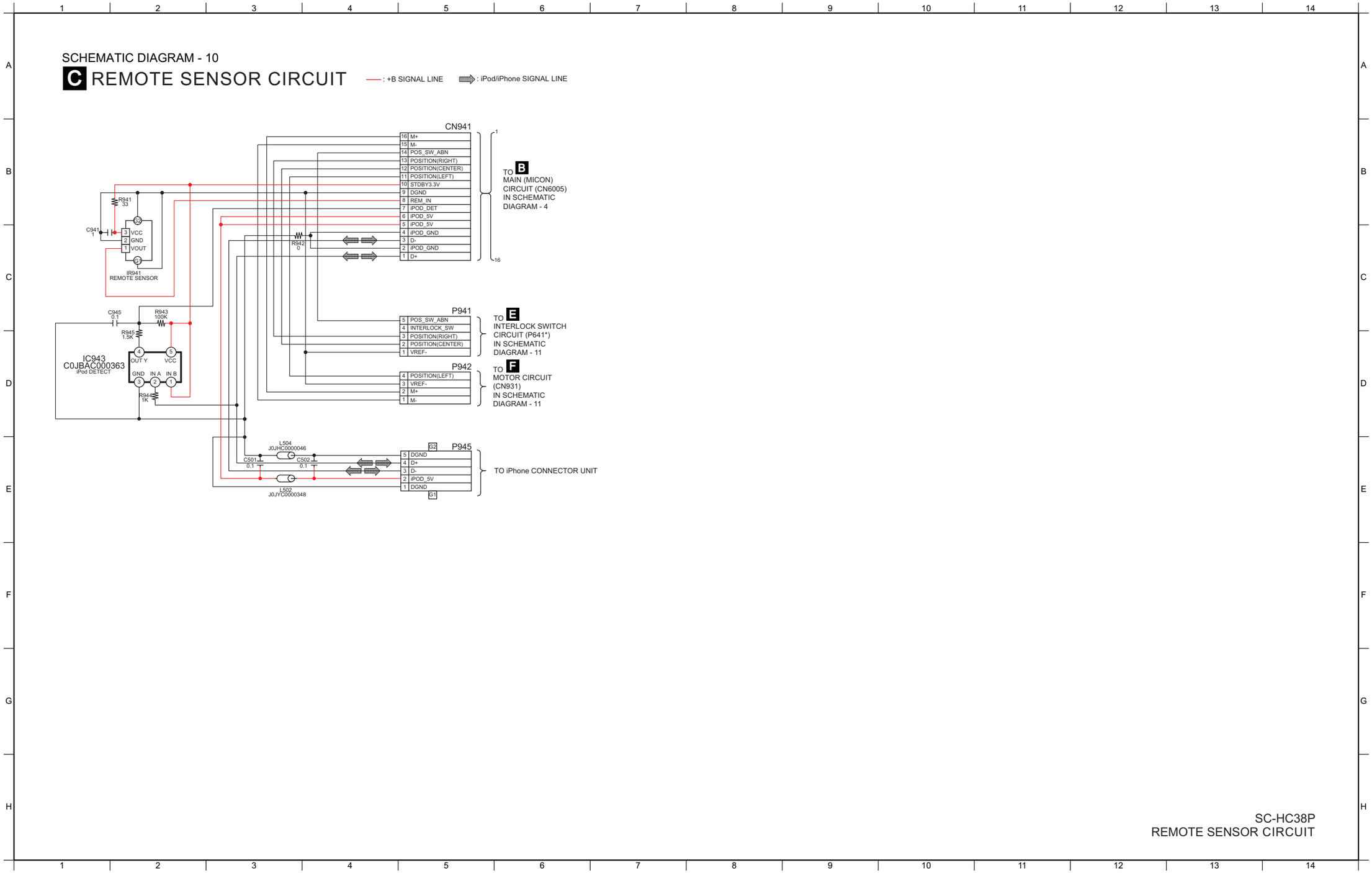

14.12. PANEL, INTERLOCK SWITCH & MOTOR CIRCUIT

SCHEMATIC DIAGRAM - 11

D PANEL CIRCUIT

—— : +B SIGNAL LINE

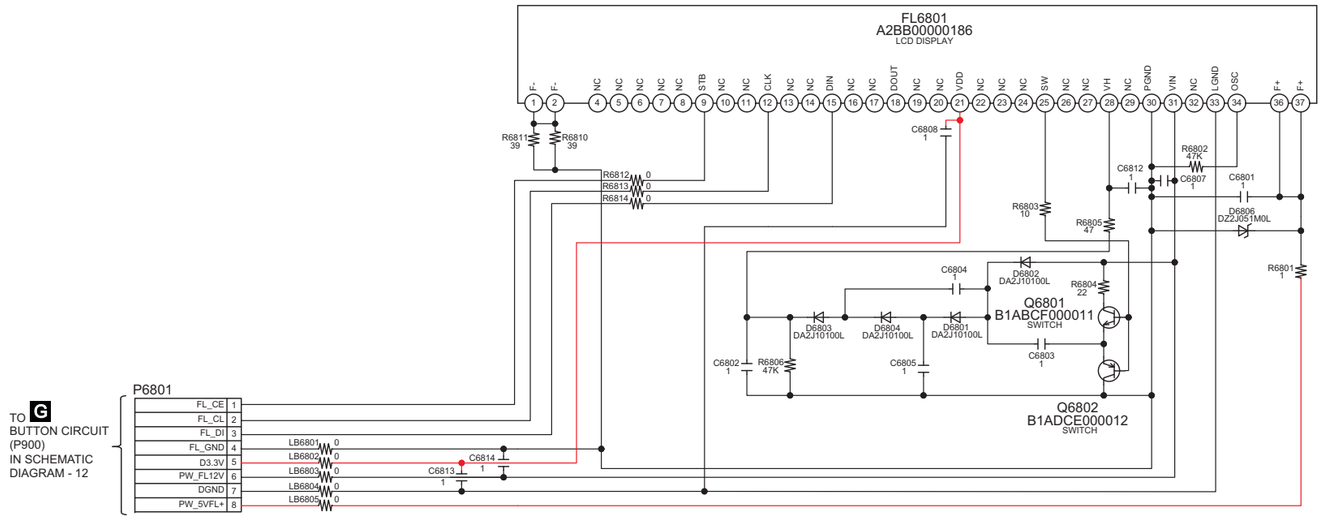

E INTERLOCK SWITCH CIRCUIT

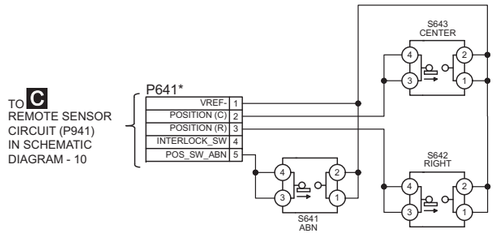

F MOTOR CIRCUIT

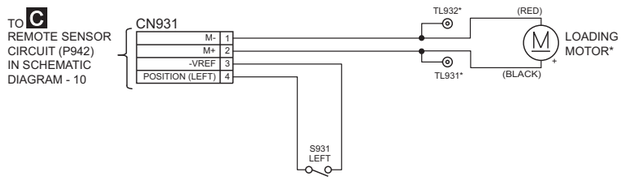

NOTE: " * " REF IS FOR INDICATION ONLY

SC-HC38P
PANEL / INTERLOCK SWITCH / MOTOR CIRCUIT

14.13. BUTTON CIRCUIT

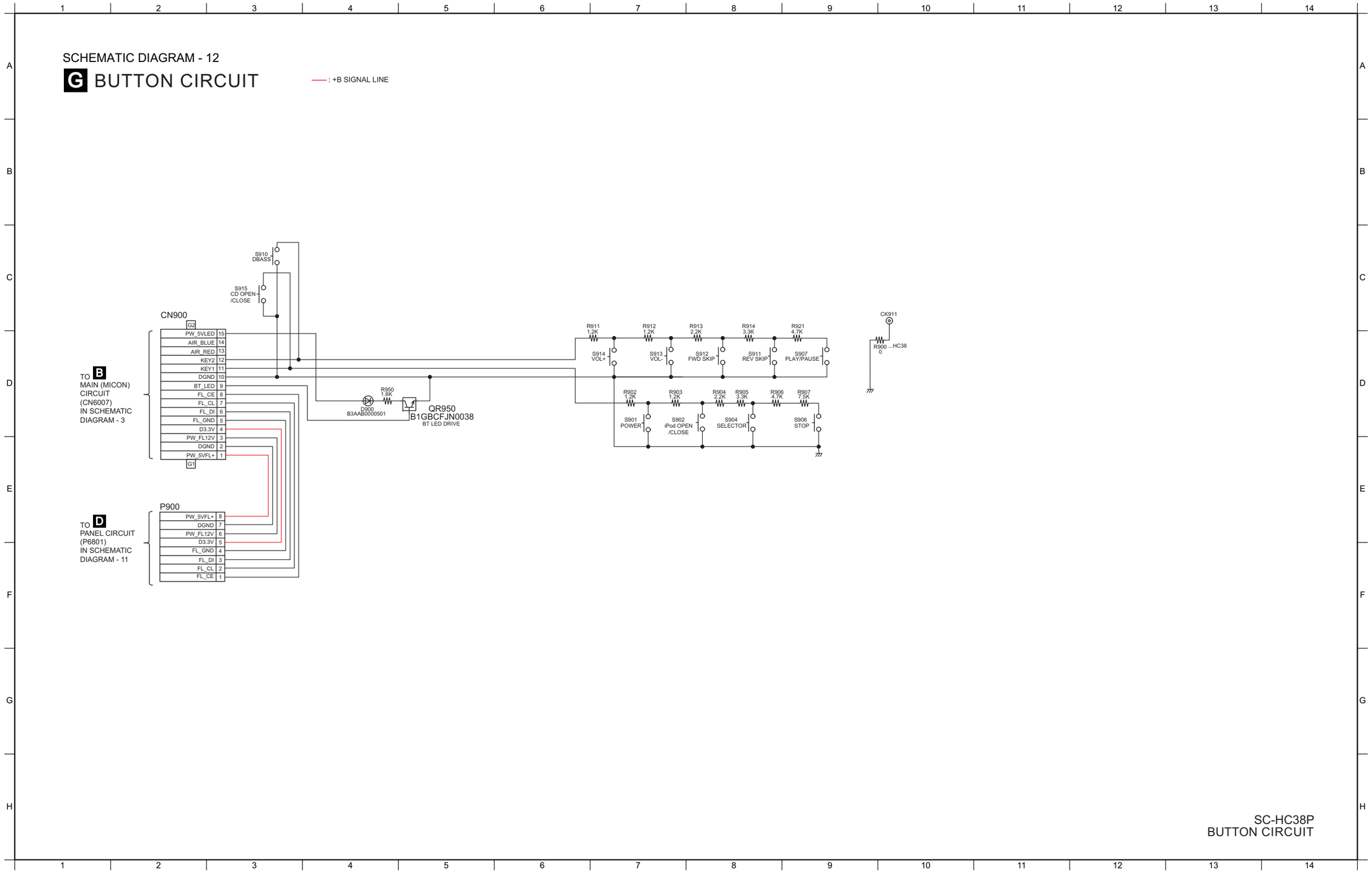

14.14. SMPS CIRCUIT

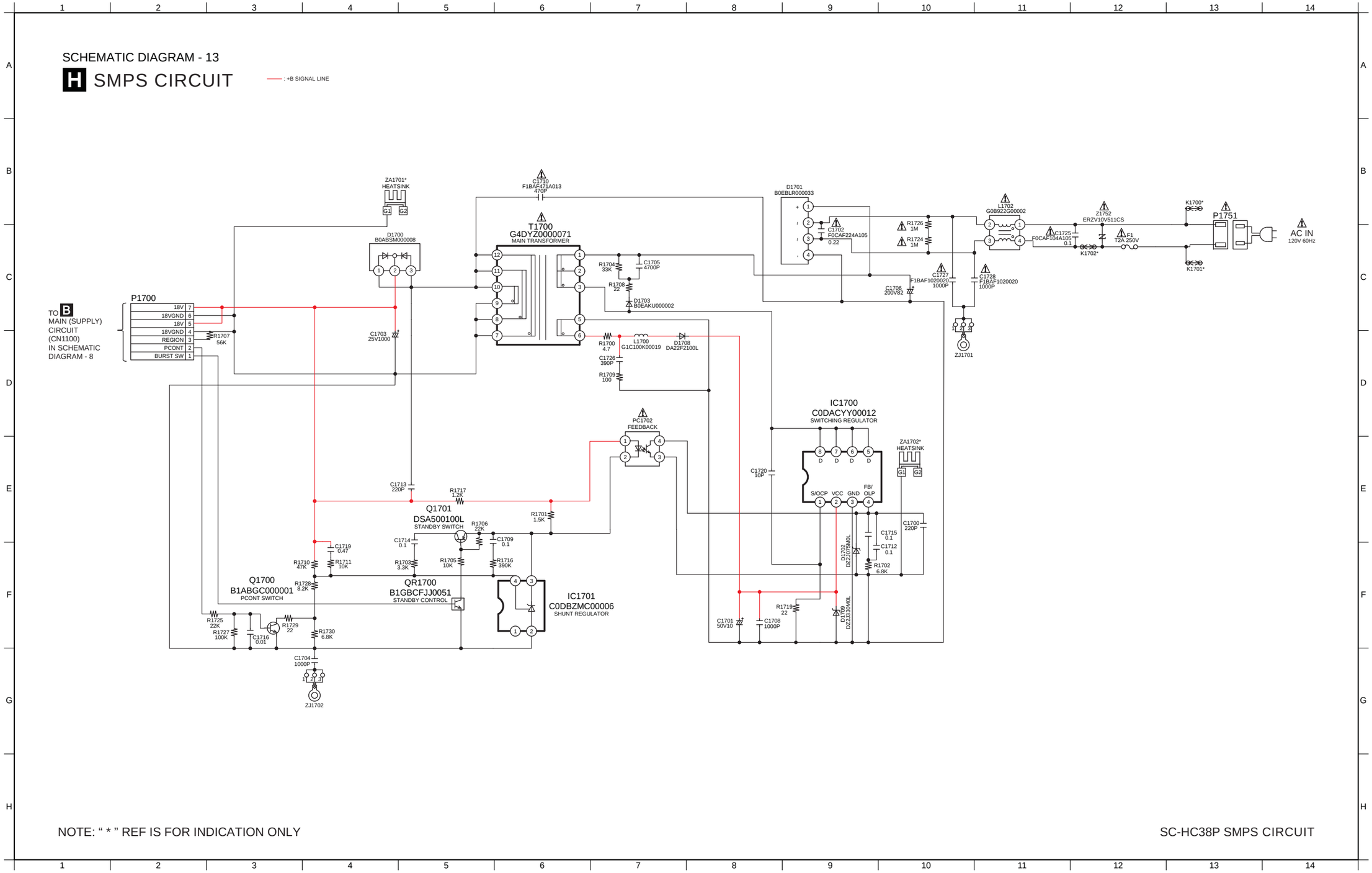

NOTE: " * " REF IS FOR INDICATION ONLY

SC-HC38P SMPS CIRCUIT

15 Printed Circuit Board

15.1. CD SERVO P.C.B.

A CD SERVO P.C.B. (REP4781E)

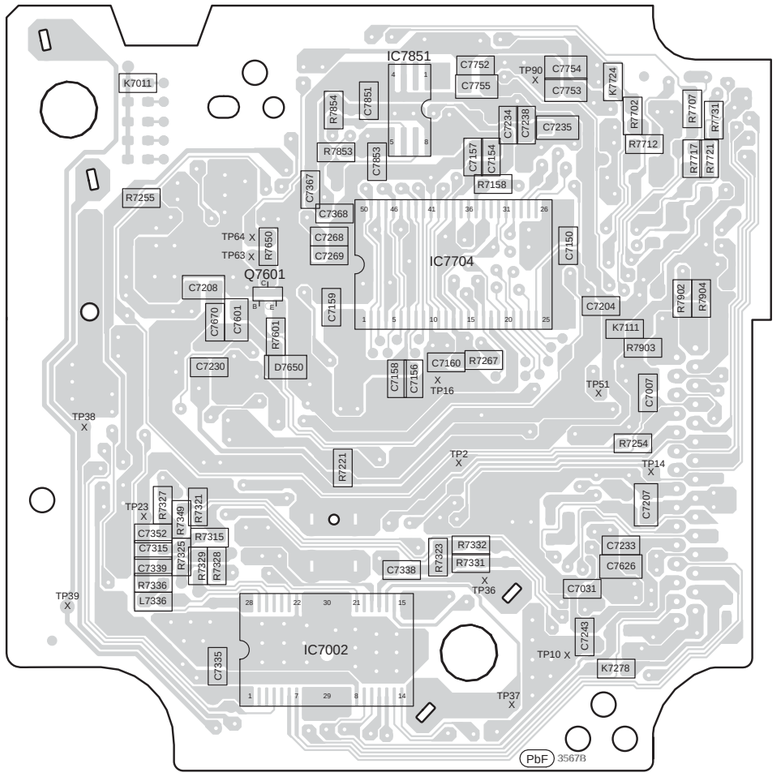

(SIDE A)

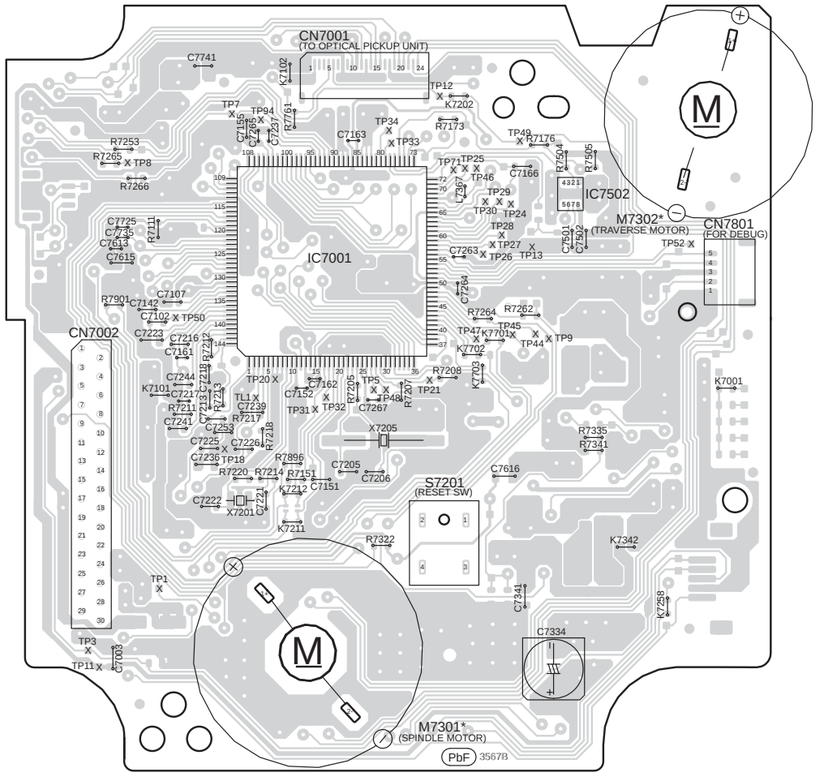

(SIDE B)

NOTE: " * " REF IS FOR INDICATION ONLY

SC-HC38P
CD SERVO P.C.B.

15.2. MAIN P.C.B. (Side A)

B MAIN P.C.B. (REP4870BA)

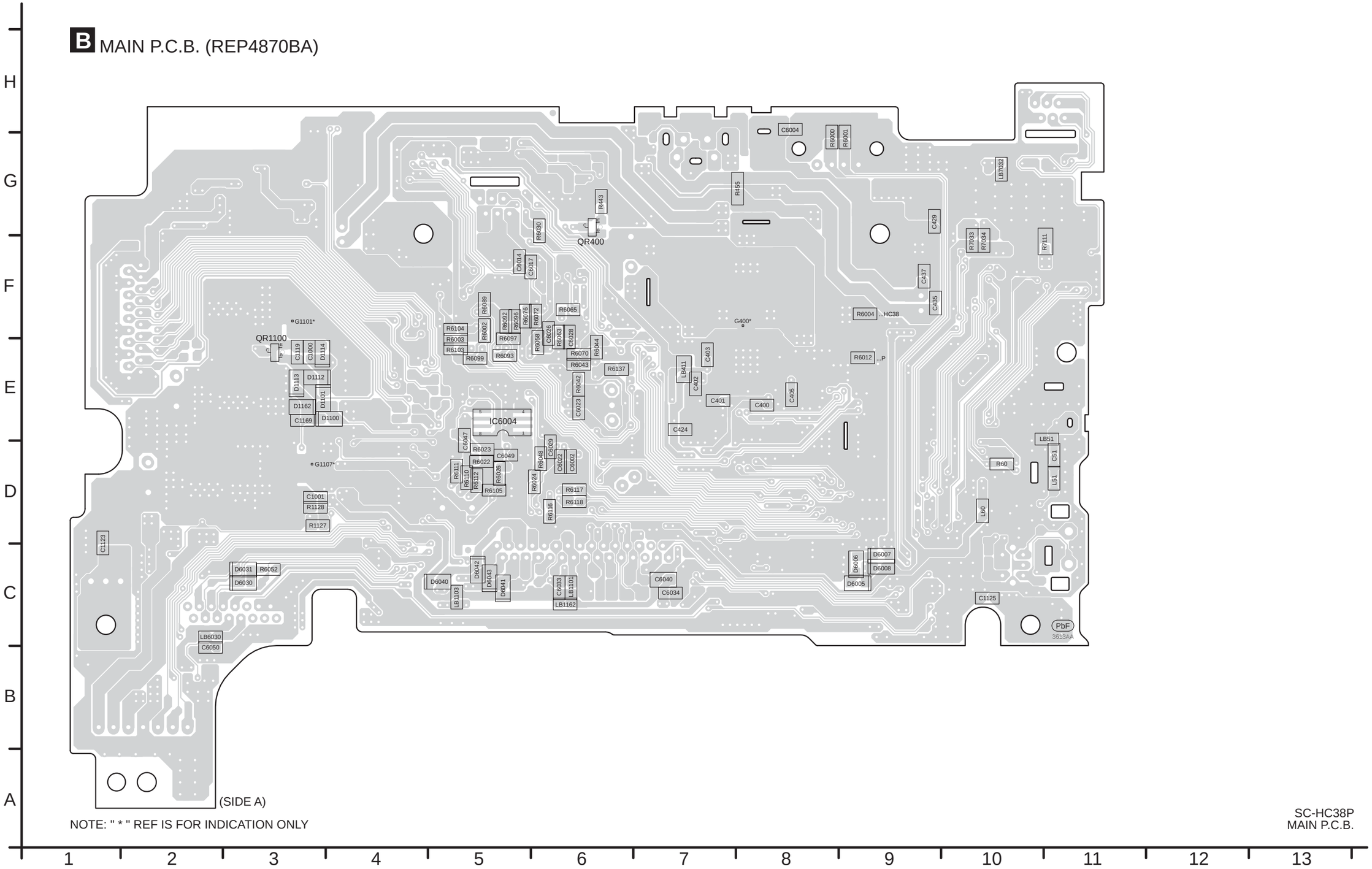

NOTE: " * " REF IS FOR INDICATION ONLY

SC-HC38P
MAIN P.C.B.

15.3. MAIN P.C.B. (Side B)

B MAIN P.C.B. (REP4870BA)

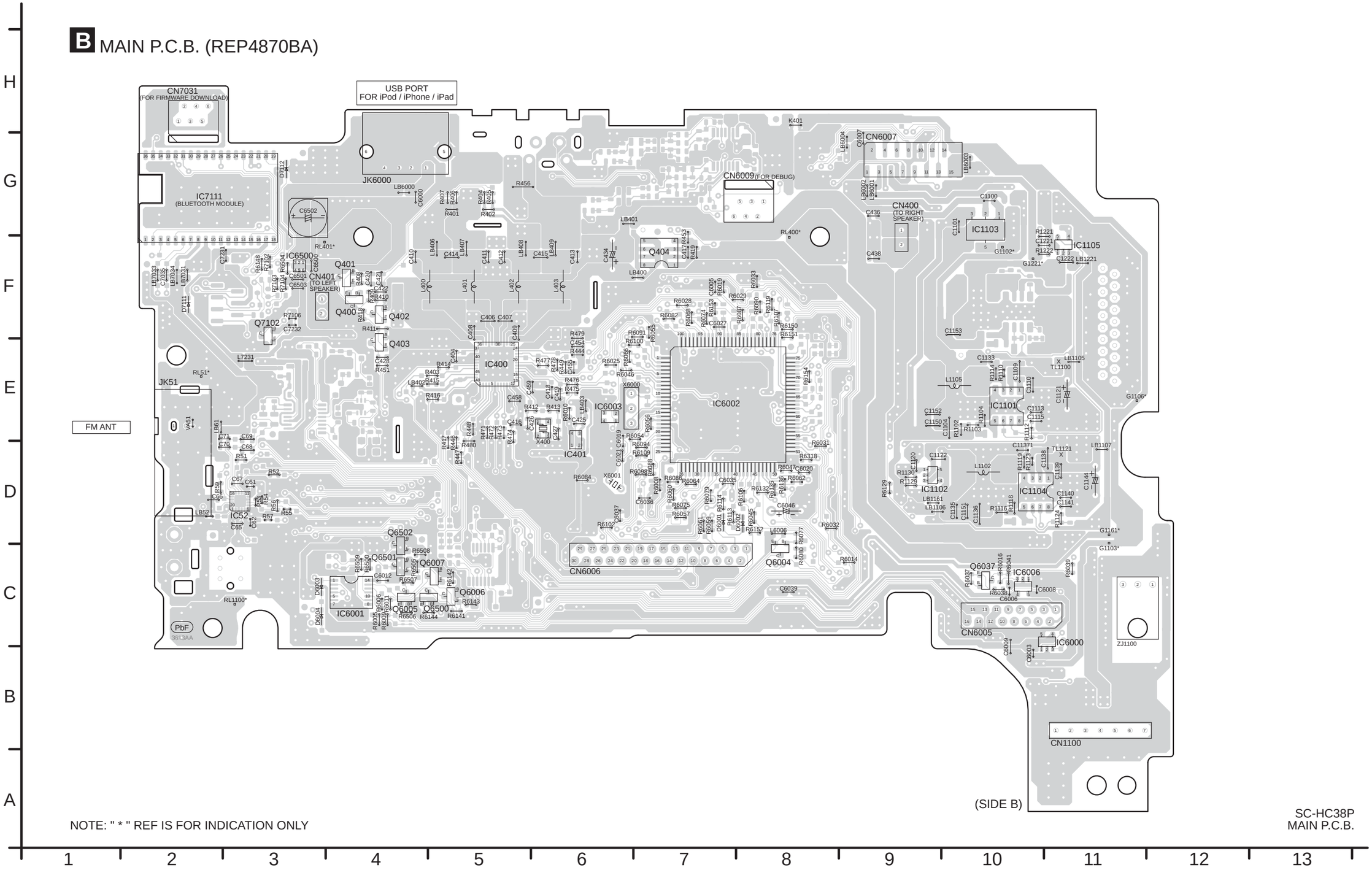

NOTE: " * " REF IS FOR INDICATION ONLY

SC-HC38P
MAIN P.C.B.

15.4. REMOTE SENSOR, PANEL, INTERLOCK SWITCH & MOTOR P.C.B.

C REMOTE SENSOR P.C.B. (REP4870BC)

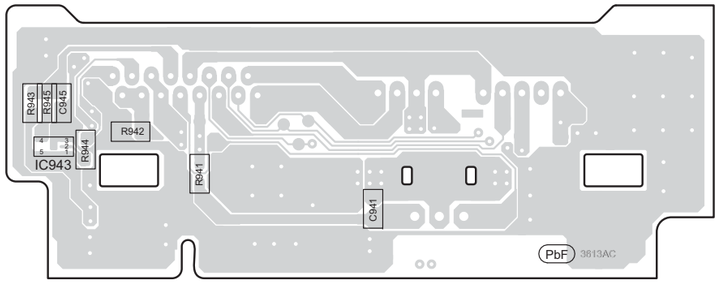

(SIDE A)

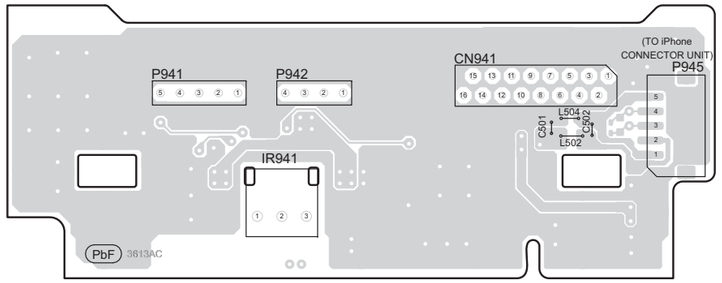

SENSOR

(SIDE B)

D PANEL P.C.B. (REP4871BB)

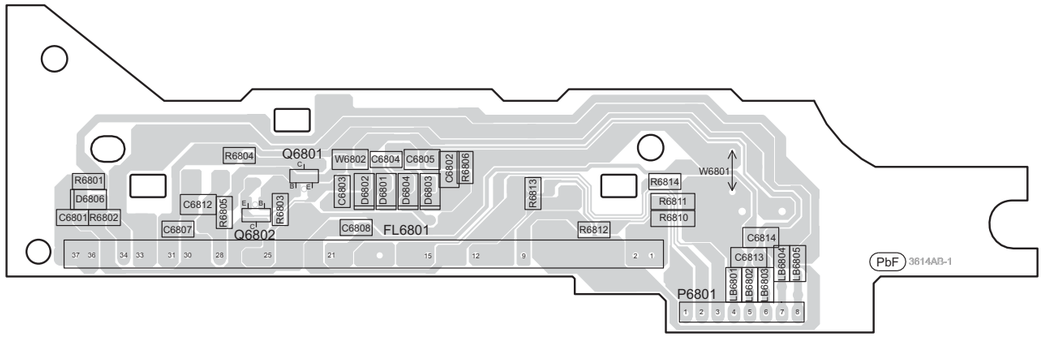

E INTERLOCK SWITCH P.C.B. (REP4871BC)

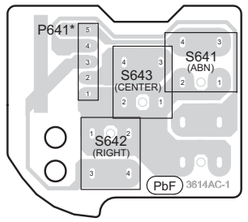

F MOTOR P.C.B. (REP4871BD)

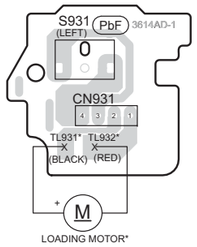

NOTE: " * " REF IS FOR INDICATION ONLY

SC-HC38P
REMOTE SENSOR / PANEL / INTERLOCK SWITCH / MOTOR P.C.B.

15.5. BUTTON P.C.B.

G BUTTON P.C.B. (REP4904A)

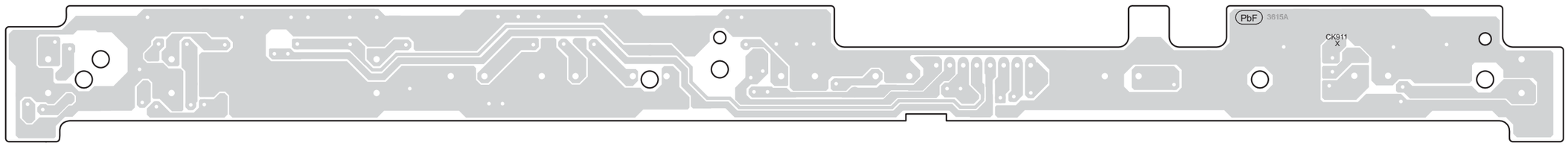

(SIDE A)

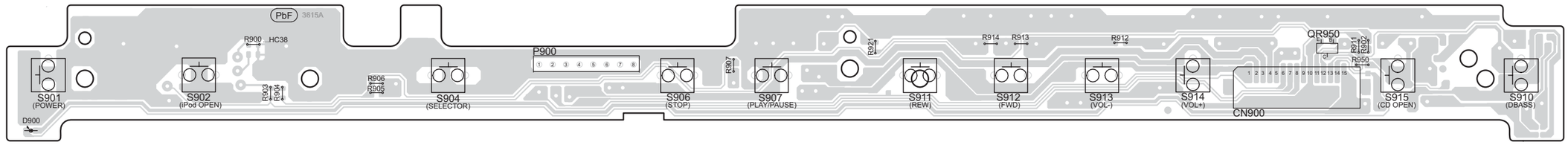

(SIDE B)

SC-HC38P
BUTTON P.C.B.

15.6. SMPS P.C.B.

H SMPS P.C.B. (REP4871BA)

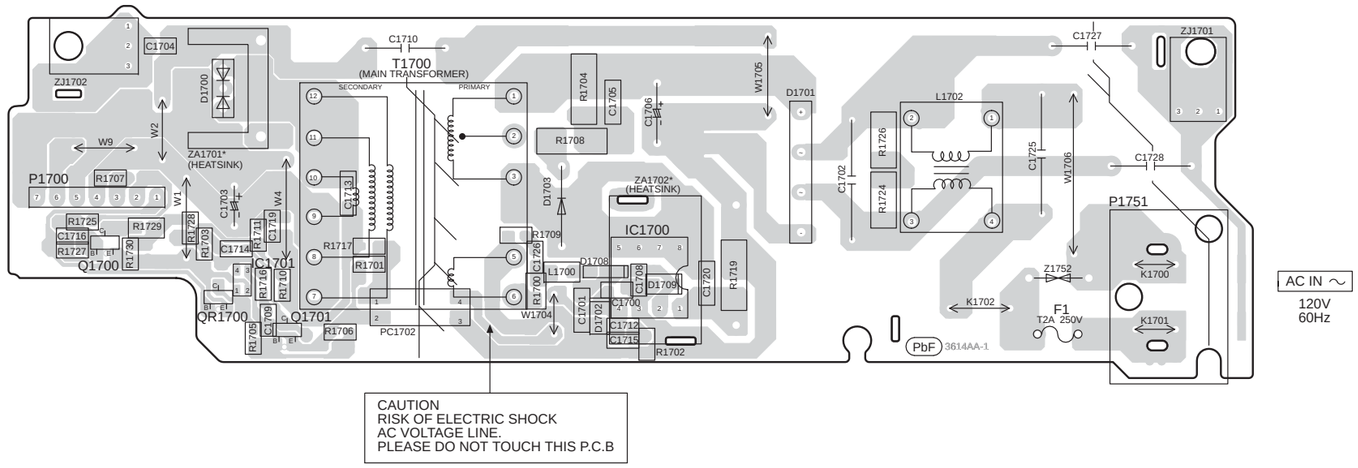

CAUTION
RISK OF ELECTRIC SHOCK
AC VOLTAGE LINE.
PLEASE DO NOT TOUCH THIS P.C.B

NOTE: " * " REF IS FOR INDICATION ONLY

SC-HC38P
SMPS P.C.B.

16 Appendix Information of Schematic Diagram

16.1. Voltage Measurement & Waveform Chart

Note:

- Indicated voltage values are the standard values for the unit measured by the DC electronic circuit tester (high-impedance) with the chassis taken as standard.
  Therefore, there may exist some errors in the voltage values, depending on the internal impedance of the DC circuit tester.
- Circuit voltage and waveform described herein shall be regarded as reference information when probing defect point because it may differ from actual measuring value due to difference of Measuring instrument and its measuring condition and product itself.

16.1.1. CD SERVO P.C.B. (1/2)

REF NO.	IC7001																			
MODE	1	2	3	4	5	6	7	8	9	10	11	12	13	14	15	16	17	18	19	20
CD PLAY	1.5	0	3.3	3.3	1.7	0	0	0	1.7	1.5	3.3	1.6	1.8	3.3	1.8	0	1.8	0	1.8	3.3

REF NO.	IC7001																			
MODE	21	22	23	24	25	26	27	28	29	30	31	32	33	34	35	36	37	38	39	40
CD PLAY	1.8	0	1.5	1.6	3.3	1.2	1.5	1.2	3.3	0	0	1.5	1.5	1.5	1.5	1.5	1.5	1.5	1.2	1.2

REF NO.	IC7001																			
MODE	41	42	43	44	45	46	47	48	49	50	51	52	53	54	55	56	57	58	59	60
CD PLAY	3.3	3.3	3.3	0	2.1	0	3.3	3.3	3.3	0	3.3	3.3	3.3	0	3.3	3.3	1.2	1.2	1.5	0

REF NO.	IC7001																			
MODE	61	62	63	64	65	66	67	68	69	70	71	72	73	74	75	76	77	78	79	80
CD PLAY	1.2	1.5	1.7	1.5	3.3	1.5	3.3	3.3	1.8	1.2	1.2	3.3	1.5	1.8	1.5	1.5	1.5	1.5	1.2	1.2

REF NO.	IC7001																			
MODE	81	82	83	84	85	86	87	88	89	90	91	92	93	94	95	96	97	98	99	100
CD PLAY	0	3.3	3.3	3.3	3.3	0	3.3	3.3	3.3	1.5	3.3	3.3	3.3	0	1.5	1.5	1.5	1.5	1.5	1.5

REF NO.	IC7001																			
MODE	101	102	103	104	105	106	107	108	109	110	111	112	113	114	115	116	117	118	119	120
CD PLAY	1.5	1.5	3.3	3.3	3.3	1.5	1.5	1.5	1.5	1.5	1.5	1.5	0	3.3	3.3	0	1.5	1.5	2.1	2.1

REF NO.	IC7001																			
MODE	121	122	123	124	125	126	127	128	129	130	131	132	133	134	135	136	137	138	139	140
CD PLAY	2.1	1.5	1.5	1.5	1.5	1.2	1.5	1.8	1.8	0	3.3	3.3	3.3	3.3	3.3	3.3	3.3	3.3	3.3	3.3

REF NO.	IC7001																			
MODE	141	142	143	144																
CD PLAY	3.3	3.3	3.3	3.3																

REF NO.	IC7002																			
MODE	1	2	3	4	5	6	7	8	9	10	11	12	13	14	15	16	17	18	19	20
CD PLAY	1.6	0	3.2	1.6	0	3.3	3.2	7.5	0	0	3.9	3.9	2.7	2.5	2.8	2.5	1.1	3.8	5.1	0

REF NO.	IC7002																			
MODE	21	22	23	24	25	26	27	28	29	30										
CD PLAY	1.5	0	1.1	0	0	1.6	1.6	3.2	0	0										

REF NO.	IC7502																			
MODE	1	2	3	4	5	6	7	8												
CD PLAY	3.2	3.3	0	0	0	1.5	3.3	3.3												

REF NO.	IC7704																			
MODE	1	2	3	4	5	6	7	8	9	10	11	12	13	14	15	16	17	18	19	20
CD PLAY	3.3	1.5	1.5	0	1.5	1.5	3.3	1.5	1.5	0	1.6	1.5	3.3	3.2	3.2	3.2	3.2	0	3.2	0

SC-HC38P CD SERVO P.C.B.

16.1.2. CD SERVO P.C.B. (2/2)

REF NO.	IC7704																			
MODE	21	22	23	24	25	26	27	28	29	30	31	32	33	34	35	36	37	38	39	40
CD PLAY	0	1.7	1.8	1.6	3.3	0	1.6	1.6	1.7	1.7	3.2	3.2	0	3.3	0	3.2	0	3.2	1.3	1.4

REF NO.	IC7704																			
MODE	41	42	43	44	45	46	47	48	49	50										
CD PLAY	0	1.3	1.3	3.3	1.3	1.3	0	1.3	1.3	0										

REF NO.	IC7851																			
MODE	1	2	3	4	5	6	7	8												
CD PLAY	0	0	0	0	3.2	3.2	0	3.2												

REF NO.	Q7601																			
MODE	E	C	B																	
CD PLAY	3.0	2.0	2.3																	

SC-HC38P CD SERVO P.C.B.

16.1.3. MAIN P.C.B. (1/3)

REF NO.	IC52																			
MODE	1	2	3	4	5	6	7	8	9	10	11	12	13	14	15	16	17	18	19	20
TUNER	0	1.5	0	0.8	3.3	3.3	0	3.3	3.3	3.3	3.3	0	1.4	3.3	0	0	3.3	0	0	0

REF NO.	IC400																			
MODE	1	2	3	4	5	6	7	8	9	10	11	12	13	14	15	16	17	18	19	20
CD PLAY	1.6	0	1.4	1.4	1.2	0	3.3	3.3	3.3	1.6	0	0	1.6	1.6	3.2	3.2	3.2	1.6	1.5	0
STANDBY	1.6	0	1.4	1.4	1.2	0	3.3	3.3	3.3	1.6	0	0	1.6	1.6	3.2	3.2	3.2	1.6	1.5	0

REF NO.	IC400																			
MODE	21	22	23	24	25	26	27	28	29	30	31	32	33	34	35	36	37	38	39	40
CD PLAY	3.2	3.2	3.2	0	0	16.8	3.2	0	3.1	16.8	16.8	3.3	0	3.3	16.7	0	0	3.3	0	0
STANDBY	3.2	3.2	3.2	0	0	16.8	3.2	0	3.1	16.8	16.8	3.3	0	3.3	16.7	0	0	3.3	0	0

REF NO.	IC400																			
MODE	41	42	43	44	45	46	47	48												
CD PLAY	0	0	3.3	1.5	0	0	3.3	1.5												
STANDBY	0	0	3.3	1.5	0	0	3.3	1.5												

REF NO.	IC401																			
MODE	1	2	3	4																
CD PLAY	3.3	0	1.6	3.3																
STANDBY	3.3	0	1.6	3.3																

REF NO.	IC1101																			
MODE	1	2	3	4	5	6	7	8												
CD PLAY	0	18.0	5.0	0	3.3	0	0	0												
STANDBY	0	18.0	5.0	0	3.3	0	0	0												

REF NO.	IC1102																			
MODE	1	2	3	4	5															
CD PLAY	3.3	0	18.0	3.3	18.0															
STANDBY	3.3	0	18.0	3.3	18.0															

REF NO.	IC1103																			
MODE	1	2	3																	
CD PLAY	0	3.3	5.0																	
STANDBY	0	3.3	5.0																	

REF NO.	IC1104																			
MODE	1	2	3	4	5	6	7	8												
CD PLAY	0	18.0	5.0	0	3.3	0	0	0												
STANDBY	0	18.0	5.0	0	3.3	0	0	0												

REF NO.	IC1105																			
MODE	1	2	3	4	5															
CD PLAY	12.0	0	18.0	3.3	0															
STANDBY	12.0	0	18.0	3.3	0															

SC-HC38P MAIN P.C.B.

16.1.4. MAIN P.C.B. (2/3)

REF NO.	IC6000																			
MODE	1	2	3	4	5															
CD PLAY	0	0	0	5.0	4.8															
STANDBY	0	0	0	5.0	4.8															

REF NO.	IC6001																			
MODE	1	2	3	4	5	6	7	8	9	10	11	12	13	14						
CD PLAY	0	3.3	0	3.3	0	0	0	0	3.3	3.3	3.3	3.3	0	3.3						
STANDBY	0	3.3	0	3.3	0	0	0	0	3.3	3.3	3.3	3.3	0	3.3						

REF NO.	IC6002																			
MODE	1	2	3	4	5	6	7	8	9	10	11	12	13	14	15	16	17	18	19	20
CD PLAY	3.3	3.3	3.3	3.3	3.3	0	3.3	0	3.3	0	0	1.3	1.6	0	1.7	1.7	3.3	1.8	3.3	3.3
STANDBY	3.3	3.3	3.3	3.3	3.3	0	3.3	0	3.3	0	0	1.3	1.6	0	1.7	1.7	3.3	1.8	3.3	3.3

REF NO.	IC6002																			
MODE	21	22	23	24	25	26	27	28	29	30	31	32	33	34	35	36	37	38	39	40
CD PLAY	3.3	3.3	0	0	3.3	3.3	3.3	3.3	3.3	0	3.3	1.3	0	3.3	3.3	3.3	0	1.8	0	0
STANDBY	3.3	3.3	0	0	3.3	3.3	3.3	3.3	3.3	0	3.3	1.3	0	3.3	3.3	3.3	0	1.8	0	0

REF NO.	IC6002																			
MODE	41	42	43	44	45	46	47	48	49	50	51	52	53	54	55	56	57	58	59	60
CD PLAY	0	0	3.3	0	3.2	0	0	3.3	0	3.3	3.3	0	0	0	3.3	0	0	0	1.8	3.3
STANDBY	0	0	3.3	0	3.2	0	0	3.3	0	3.3	3.3	0	0	0	3.3	0	0	0	1.8	3.3

REF NO.	IC6002																			
MODE	61	62	63	64	65	66	67	68	69	70	71	72	73	74	75	76	77	78	79	80
CD PLAY	3.3	0	0	1.8	1.9	0	3.3	3.3	0	1.8	0	0	0	0	0	0	1.2	0	3.3	3.3
STANDBY	3.3	0	0	1.8	1.9	0	3.3	3.3	0	1.8	0	0	0	0	0	0	1.2	0	3.3	3.3

REF NO.	IC6002																			
MODE	81	82	83	84	85	86	87	88	89	90	91	92	93	94	95	96	97	98	99	100
CD PLAY	3.1	3.2	0	0	0	3.1	0	0	3.3	0	0	3.3	0	3.3	3.3	0	3.3	0	3.0	3.3
STANDBY	3.1	3.2	0	0	0	3.1	0	0	3.3	0	0	3.3	0	3.3	3.3	0	3.3	0	3.0	3.3

REF NO.	IC6003																			
MODE	1	2	3	4																
CD PLAY	3.3	3.3	0	0																
STANDBY	3.3	3.3	0	0																

REF NO.	IC6004																			
MODE	1	2	3	4	5	6	7	8												
CD PLAY	0	0	0	0	3.3	3.3	1.8	3.3												
STANDBY	0	0	0	0	3.3	3.3	1.8	3.3												

REF NO.	IC6006																			
MODE	1	2	3	4	5															
CD PLAY	0	0	0	5.0	5.0															
STANDBY	0	0	0	5.0	5.0															

SC-HC38P MAIN P.C.B.

16.1.5. MAIN P.C.B. (3/3)

REF NO.	IC6500																			
MODE	1	2	3	4	5	6														
CD PLAY	5.0	0	0	4.8	0	5.0														
STANDBY	5.0	0	0	4.8	0	5.0														

REF NO.	Q400				Q401				Q402				Q403							
MODE	E	C	B		E	C	B		E	C	B		E	C	B					
CD PLAY	3.7	4.5	3.7		3.7	4.5	3.7		16.5	0	4.5		0	3.2	0					
STANDBY	3.7	4.5	3.7		3.7	4.5	3.7		16.5	0	4.5		0	3.2	0					

REF NO.	Q404									Q6004				Q6005						
MODE	1	2	3	4	5	6	7	8		E	C	B		E	C	B				
CD PLAY	17.0	17.0	17.0	1.0	17.0	17.0	17.0	17.0		3.3	3.0	0		0	4.3	0				
STANDBY	17.0	17.0	17.0	1.0	17.0	17.0	17.0	17.0		3.3	3.0	0		0	4.4	0				

REF NO.	Q6006				Q6007				Q6037				Q6500				Q6501			
MODE	E	C	B		E	C	B		E	C	B		E	C	B		E	C	B	
CD PLAY	5.0	3.3	4.0		5.0	3.3	4.0		0.2	0	3.3		0	4.4	0		5.0	3.3	4.0	
STANDBY	5.0	3.3	4.0		5.0	3.3	4.0		0.2	0	3.3		0	4.4	0		5.0	3.3	4.0	

REF NO.	Q6502				Q7102				QR400				QR1100							
MODE	E	C	B		E	C	B		E	C	B		E	C	B					
CD PLAY	5.0	3.3	4.0		3.3	0	3.0		-3.3	1.0	0		0	0	3.3					
STANDBY	5.0	3.3	4.0		3.3	0	3.0		-3.3	1.0	0		0	0	3.3					

SC-HC38P MAIN P.C.B.

16.1.6. REMOTE SENSOR P.C.B.

REF NO.	IC943																			
MODE	1	2	3	4	5															
POWER ON	3.3	5.0	0	5.0	3.3															
STANDBY	3.3	5.0	0	5.0	3.3															

SC-HC38P REMOTE SENSOR P.C.B.

16.1.7. PANEL P.C.B.

REF NO.	Q6801				Q6802															
MODE	E	C	B		E	C	B													
POWER ON	0.5	2.2	3.0		0.5	0	3.0													
STANDBY	0.5	2.2	3.0		0.5	0	3.0													

SC-HC38P PANEL P.C.B.

16.1.8. BUTTON P.C.B.

REF NO.	QR950																			
MODE	E	C	B																	
POWER ON	0	5.0	1.8																	
STANDBY	0	5.0	1.8																	

SC-HC38P BUTTON P.C.B.

16.1.9. SMPS P.C.B.

REF NO.	IC1700																			
MODE	1	2	3	4	5	6	7	8												
POWER ON	3.0	20.2	0	2.0	1.0	1.0	1.0	1.0												
STANDBY	3.0	20.2	0	2.0	1.0	1.0	1.0	1.0												

REF NO.	IC1701																			
MODE	1	2	3	4																
POWER ON	0	0	2.5	18.0																
STANDBY	0	0	2.5	18.0																

REF NO.	Q1700				Q1701				QR1700											
MODE	E	C	B		E	C	B		E	C	B									
POWE ON	0	18.0	5.0		18.0	18.0	5.0		0	5.0	0									
STANDBY	0	18.0	5.0		18.0	18.0	5.0		0	5.0	0									

SC-HC38P SMPS P.C.B.

16.1.10. Waveform Chart

WF No. IC52-2,13 (TUNER) 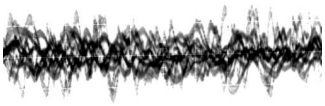 0.1Vp-p(200usec/div)	WF No. IC400-13 (PLAY) 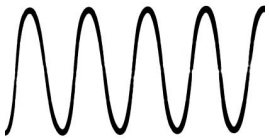 2Vp-p(20nsec/div)	WF No. IC400-14 (PLAY) 2.2Vp-p(20nsec/div)	WF No. IC6002-12 (PLAY) 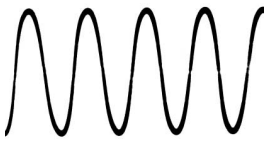 3.8Vp-p(50nsec/div)
WF No. IC6002-13 (PLAY) 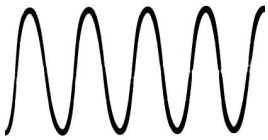 3Vp-p(50nsec/div)	WF No. IC6002-15 (PLAY) 1.1Vp-p(10usec/div)	WF No. IC6002-16 (PLAY) 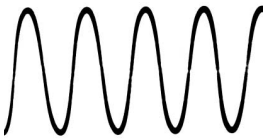 2.1Vp-p(10usec/div)	

16.2. Illustration of IC's, Transistors and Diodes

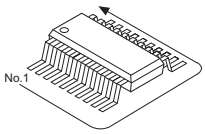	C0DBAYY01653 (8P) C0EBE0000240 (4P) C3ABMY000027 (50P) C3EBEY000037 (8P) C3EBFY000029 (8P) C0DBZMC00006 (4P) C0JBAR000586 (14P)	C0DBGYY03909 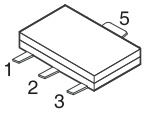	MN6627947RK (144P) RFKWMHC38PM (100P) 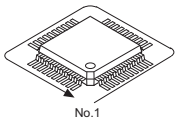	C0DBZYY00555 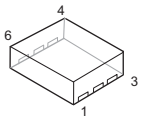	C0GBY0000117 (30P) 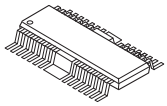
MFI337S3959 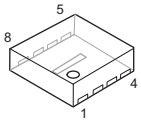	C0DBGYY00915 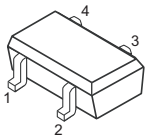	C0DACYY00012 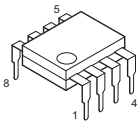	VUEALLPT058 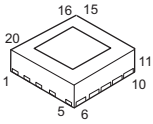	C1AB00003800 (48P) 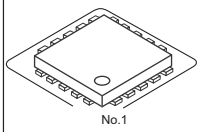	C0DBEYY00146 C0DBZYY00610 C0JBAC000363 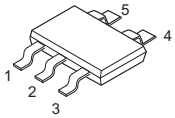
B1CHRC000047 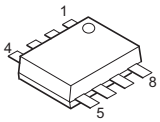	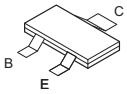	B1ADCF000001 B1GBCFJN0038 B1ADCE000012 B1ABCF000011 B1ABGC000001 DSA500100L B1GBCFJJ0051 B1GBCFNN0038 B1ABCF000176	B0EBLR000033 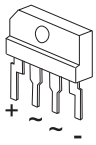	B3AAB0000501 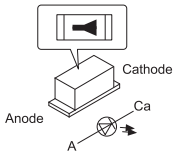	B0EAKU000002 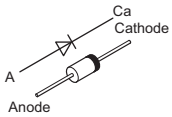
B0JCGD000016 DZ2J056M0L DZ2J062M0L DZ2J051M0L DZ2J075M0L DZ2J330M0L DA2J10100L 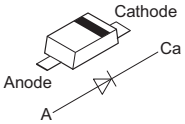		DA22F2100L 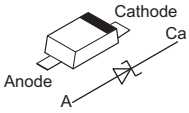	B0ABSM000008 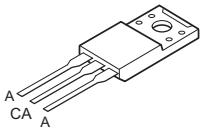		

16.3. Terminal Function of IC's

16.3.1. IC6002 (RFKWMHC38PM) MICRO PROCESSOR IC

Pin No.	Mark	I/O	Function
1	DAMP_RST	O	DAMP RESET
2	DAMP_SLEEP	O	DAMP SLEEP MODE
3	DAMP_MUTE	O	DAMP MUTING
4	OCD_SDA	O	OCD SERIAL DATA
5	PDET2 (D_AMP)	I	D-AMP WARNING / ERROR DETECT (ACTIVE LOW= ERROR)
6	OCD_SCK	O	OCD SERIAL DATA CLOCK
7	HPMUTE	O	HEADPHONE MUTING
8	LID_LEFT	O	SLIDING DOOR OPEN.CLOSE CONTROL LEFT
9	DAMP_ERR	I	DAMP ERROR
10	LID_RIGHT	O	SLIDING DOOR OPEN.CLOSE CONTROL RIGHT
11	GND_MM0D0	-	GROUND
12	OSC2(OUT)	O	OSCILLATOR OUTPUT
13	OSC1(IN)	I	OSCILLATOR INPUT
14	VSS	-	GROUND
15	XI	O	OSCILLATOR OUTPUT
16	XO	O	OSCILLATOR INPUT
17	VDD33	-	+3.3 VOLTAGE SUPPLY
18	VDD18	-	+1.8 VOLTAGE SUPPLY
19	NRST	I	ACTIVE LOW RESET
20	CD_M_REQ	O	CD MICRO-PROCESSOR INTER-RUPT REQUEST
21	RST_SW	I	RESET SWITCH
22	CD_RESET	O	CD RESET
23	iPod_CHG_SEL	I	iPod CHANGE SELECTION
24	USB_EN	O	USB ENABLE
25	REM_IN	I	REMOTE CONTROL INPUT
26	USB_OVC	I	USB OVERCURRENT
27	USB_IN	I	USB IN
28	TUN_INT	I	TUNER INTERRUPT
29	CD_S_REQ	I	CD STATUS REQUEST
30	NC	I	NO CONNECTION
31	BT_RX	O	BT_RECEIVE
32	BT_TX	I	BT_TRANSMIT
33	BT_MFB	O	TRIGGER FOR BT MODULE RESET ACTIVE "L"
34	CD_SI	O	CD SERIAL INPUT
35	CD_SO	I	CD SERIAL OUTPUT
36	CD_SCLK	O	CD SERIAL CLOCK
37	VDD18	-	+1.8 VOLTAGE SUPPLY
38	CD_CW	O	TRAVERSE MOTOR CLOCKWISE
39	VSS	-	GROUND
40	CD_CCW	O	TRAVERSE MOTOR COUNTER-CLOCKWISE
41	NC	O	NO CONNECTION
42	NC	-	NO CONNECTION
43	MUX_OE	O	iPod OVERCURRENT PROTEC-TION
44	POS_SW_ABN	O	POSTION SWITCH ABNORMAL DETECT
45	iPod_DET	I	iPod DETECT
46	POS_SW_L	I	SLIDING DOOR POSITION DETECT (L)
47	POS_SW_CEN	I	SLIDING DOOR POSITION DETECT ©
48	POS_SW_R	I	SLIDING DOOR POSITION DETECT ®
49	iPod_PCONT	O	iPod POWER CONTROL
50	PCONT_POW	O	POWER CONTROL
51	SMPS_STOP	O	SMPS CUTOFF
52	iPod_OVC	I	NO CONNECTION
53	STBY_CTRL	O	STANDBY CONTROL
54	iPod_PCONT2	O	iPod PCONT
55	NC	O	NO CONNECTION
56	NC	O	NO CONNECTION
57	NC	O	NO CONNECTION
58	NC	O	NO CONNECTION
59	NC	O	NO CONNECTION
60	EE_SCL	O	EEPROM SERIAL CLOCK
61	EE_SDA	I/O	EEPROM SERIAL DATA
62	NC	O	NO CONNECTION
63	VSS	-	GROUND
64	NC	O	NO CONNECTION
65	NC	O	NO CONNECTION
66	NC	O	NO CONNECTION
67	iPod_SEL	O	iPod SELECT
68	iPad_SEL	O	iPad SELECT
69	NC	O	NO CONNECTION
70	BT_LED	O	BT LED DRIVE
71	NC	O	NO CONNECTION
72	NC	O	NO CONNECTION
73	NC	O	NO CONNECTION
74	NC	O	NO CONNECTION
75	APD_OUT (Test only)	O	AUTO POWER DOWN DETECT
76	FL_DI	O	FL DISPLAY DATA INPUT
77	FL_CS	O	FL DISPLAY CHIP SELECT
78	FL_CLK	O	FL DISPLAY CLOCK
79	TU_SDA	I/O	TUNER SERIAL DATA
80	TU_RST	O	TUNER RESET
81	TU_SCL	O	TUNER SERIAL CLOCK
82	DAMP_SDA	I/O	DAMP SERIAL DATA
83	UART_SEL	O	UART SELECT ENABLE
84	DAMP_SCL	O	DAMP SERIAL CLOCK
85	NC	O	NO CONNECTION
86	NC	-	NO CONNECTION
87	I2S_SEL (Select AP/BT)	O	NO CONNECTION
88	ADC_APD	O	NO CONNECTION
89	VDD	-	VOLTAGE SUPPLY
90	BT_RST	O	BT_RESET
91	VSS	-	GROUND
92	KEY1	I	KEY INPUT 1
93	REGION_SUB	I	REGION SETTING
94	KEY2	I	KEY INPUT 2
95	SMPS_REG	I	SMPS TYPE DETECTION
96	PDET1 (REG)	I	REGULATOR POWER RISE DETECT
97	REGION	I	TUNER REGION SETTING
98	BT_MUTE	I	BT_MUTE
99	M_VDET	I	SMPS POWER DETECT / POWER DROP DETECTION
100	VREF+	-	VOLTAGE SUPPLY

17 Exploded View and Replacement Parts List

17.1. Exploded View and Mechanical replacement Parts List

17.1.1. Cabinet Parts Location

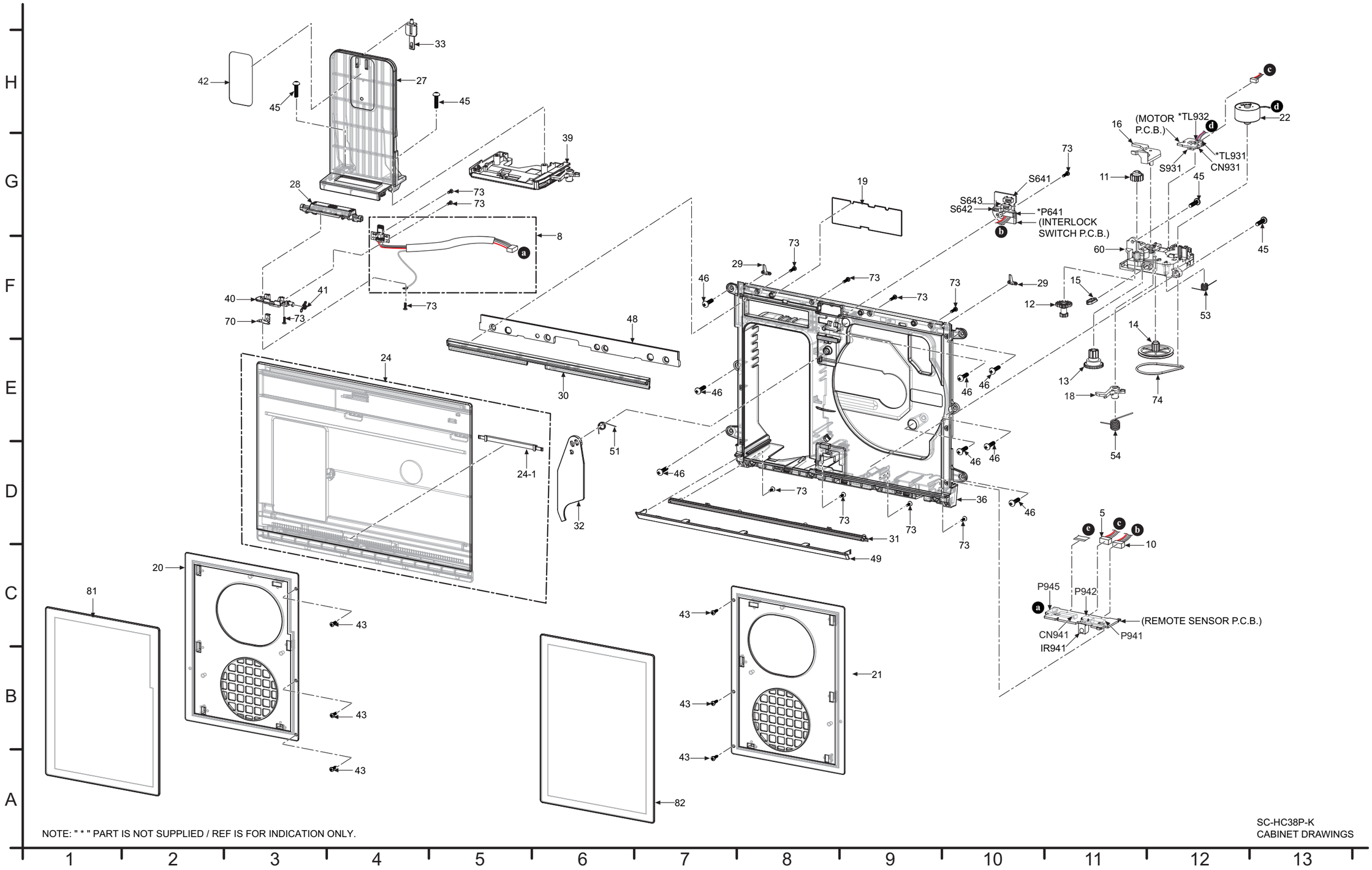

NOTE: " * " PART IS NOT SUPPLIED / REF IS FOR INDICATION ONLY.

SC-HC38P-K
CABINET DRAWINGS

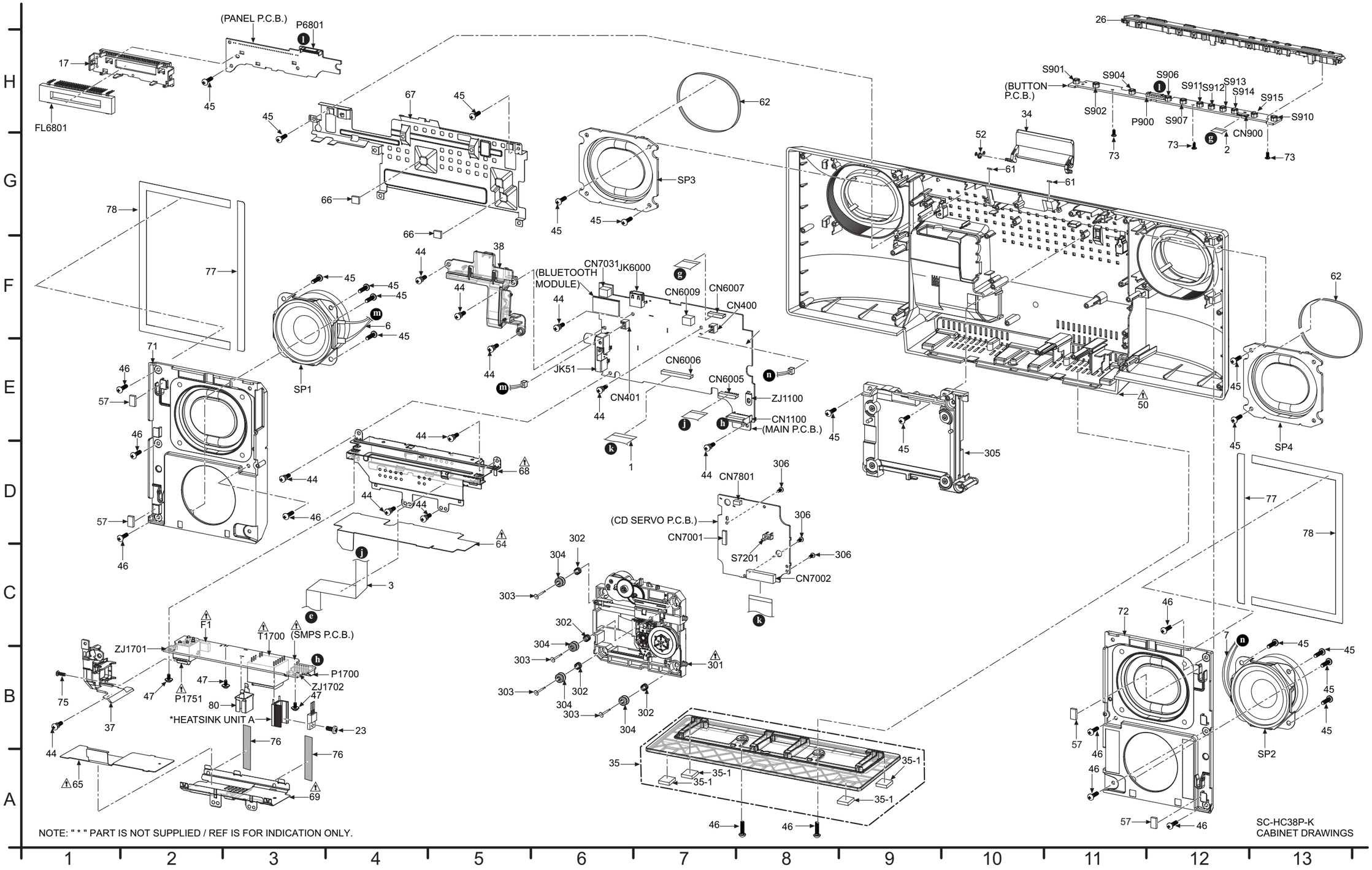

NOTE: " * " PART IS NOT SUPPLIED / REF IS FOR INDICATION ONLY.

17.1.2. Packaging

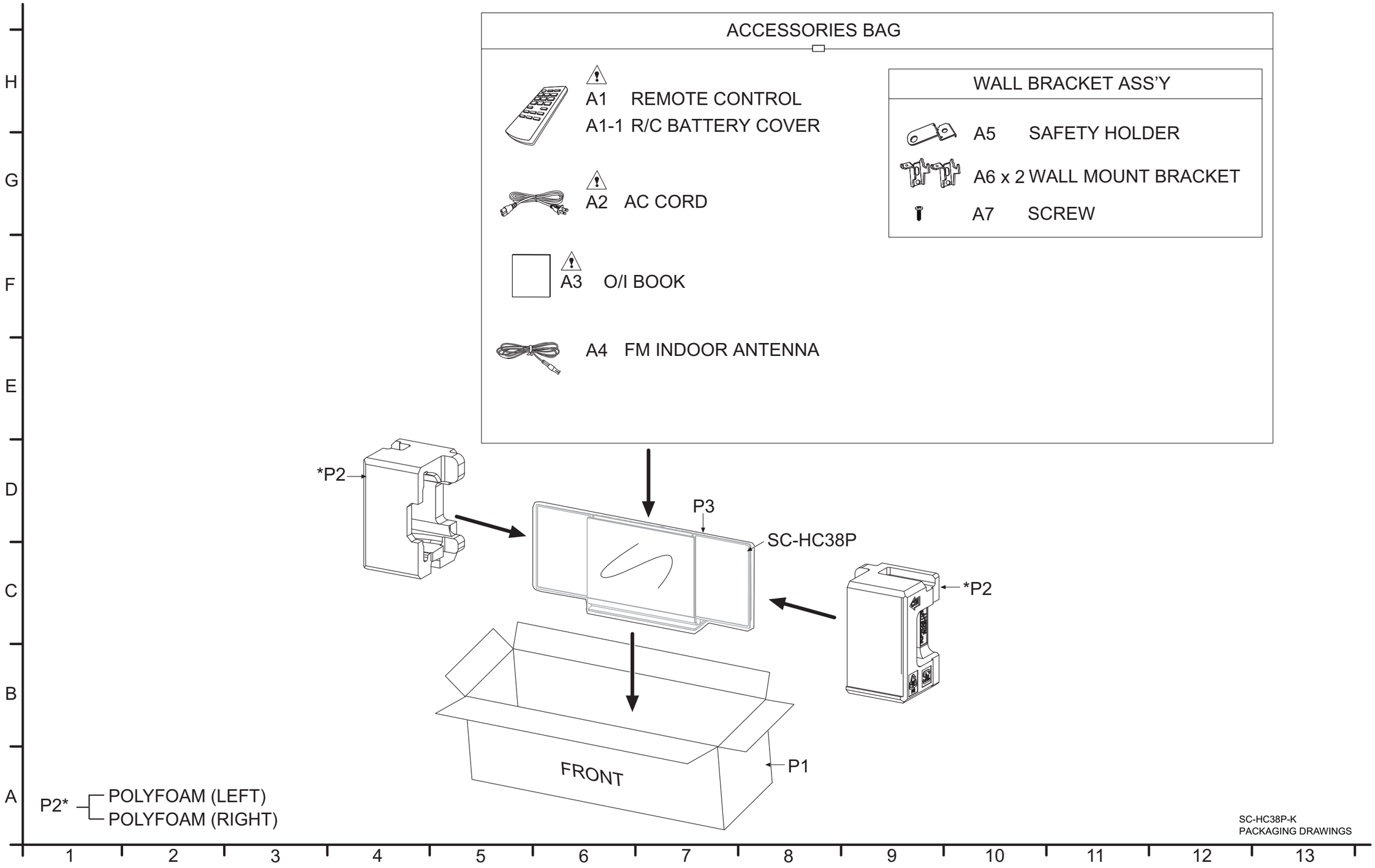

17.1.3. Mechanical Replacement Parts List

Important Safety Notice

Components identified by ⚠ mark have special characteristics important for safety.
When replacing any of these components, use only manufacturer's specified parts.

RTL (Retention Time Limited)

Note: The marking (RTL) indicates that the Retention Time is Limited for this item.
After the discontinuation of this assembly in production, the item will continue to be available for a specific period of time. The retention period of availability is dependant on the type of assembly, and in accordance with the laws governing part and product retention. After the end of this period, the assembly will no longer be available.

Note:

- When replacing any of these components, be sure to use only manufacturer's specified parts shown in the replacement part list.
- The parenthesized indications on the Remarks column specify the destination & product color (Refer to the cover page for the information).
- Parts without these indications shall be used for all areas.
- This product uses a laser diode. Refer to "Precaution of Laser Diode".
- All parts mentioned are supplied by PAVCJM unless indicated likewise.
- Reference for O/I book languages are as follows:

Ar:	Arabic	Du:	Dutch	It:	Italian	Sp:	Spanish
Cf:	Canadian French	En:	English	Ko:	Korean	Sw:	Swedish
Cz:	Czech	Fr:	French	Po:	Polish	Co:	Traditional Chinese
Da:	Danish	Ge:	German	Ru:	Russian	Cn:	Simplified Chinese
Pe:	Persian	Ur:	Ukraine	Pr:	Portuguese	Fi:	Finnish

Safety	Ref. No.	Part No.	Part Name & Description	Qty	Remarks
			CABINET AND CHASSIS		
	1	REE1665	30P FFC (MAIN-CD SERVO)	1	
	2	REE1727	15P FFC (BUTTON-MAIN)	1	
	3	RXQ2193	20P FFC (IR TO MAIN)	1	
	5	REX1517	4P CABLE WIRE (MOTOR-REMOTE SENSOR)	1	
	6	REX1564	2P CABLE WIRE (SP L-MAIN)	1	
	7	REX1565	2P CABLE WIRE (SP R-MAIN)	1	
	8	RXQ2184	iPhone CONNECTOR UNIT	1	
	10	REX1592	5P CABLE WIRE (INTERLOCK SWITCH-REMOTE SENSOR)	1	
	11	RDG0655	DRIVE GEAR A	1	
	12	RDG0656	DRIVE GEAR B	1	
	13	RDG0657	RELAY GEAR	1	
	14	RDG0658-1	PULLEY GEAR	1	
	15	RMM0309	CENTERING STOPPER	1	
	16	RMM0311	TRIGGER LEVER	1	
	17	RMN1049	FL HOLDER	1	
	18	RMM0310	SW LEVER	1	

Safety	Ref. No.	Part No.	Part Name & Description	Qty	Remarks
	19	RGQ0735-R	FL FILTER	1	
	20	RKB0315-Q	FRONT ORNAMENT L	1	
	21	RKB0316-Q	FRONT ORNAMENT R	1	
	22	RFKPHC37P-K	MOTOR ASS'Y	1	
	23	XTB3+8JFJ-J	SCREW	1	
	24	RYP1847-K	DOOR UNIT	1	
	24-1	RDP0120-1	IDLING RACK	1	
	26	RYP1844A-K	BUTTON ORNAMENT UNIT	1	
	27	RGK2501-K	iPhone SUPPORT	1	
	28	RGK2502-K1	iPhone DOCK	1	
	29	RGL0763-Q	LIGHTING PIECE	2	
	30	RGP1519-K	UPPER GUIDE RAIL	1	
	31	RGP1520-K	LOWER GUIDE RAIL	1	
	32	RGQ0646-K	SHUTTER	1	
	33	RGQ0648-K1	SLIDE GUIDE PIN	1	
	34	RGQ0649A-K	JACK LID	1	
	35	RYQ0903-K	BASE STAND UNIT	1	
	35-1	RKAX0028-K	LEG FELT	4	
	36	RGP1638-K	FRONT CABINET	1	
	37	RGQ0726-K	AC INLET HOLDER	1	
	38	RGQ0727A-K	TUNER HOLDER	1	
	39	RGQ0734-K	iPod BASE	1	
	40	RGQ0756-K	CONNECTOR HOLDER	1	
	41	RMB0967	iPhone SUPPORT SPRING	1	
	42	RMQ1921	iPod CUSHION	1	
	43	RHD20089	SCREW	6	
	44	RHD26043-1	SCREW	11	
	45	RHD26046	SCREW	21	
	46	RHD26046-K	SCREW	18	
	47	RHD30092-1	SCREW	3	

Safety	Ref. No.	Part No.	Part Name & Description	Qty	Remarks
	48	RKW0980-Q	TOP ORNAMENT	1	
	49	RKW0981-K	BOTTOM ORNAMENT	1	
⚠	50	RGP1639-K	REAR CABINET	1	
	51	RMB0938	SHUTTER SPRING	1	
	52	RMB0959	LID SPRING	1	
	53	RME0489	CENTERING SPRING	1	
	54	RME0490	LEVER SPRING	1	
	57	RMG0877-K	LID CUSHION	4	
	60	RMR2047-K1	MOTOR BASE	16	
	61	RMGX0033	CUSHION RUBBER	2	
	62	RMQ2009	EPT SEALER (PASSIVE RADIATOR)	2	
⚠	64	RMV0410	SMPS INSULATOR SHEET C	1	
⚠	65	RMV0415	SMPS INSULATOR SHEET B	1	
	66	RSC1097	D-AMP HEAT ABSORBER	2	
	67	RSC1196	BACK SHIELD	1	
⚠	68	RSC1197	SMPS BRACKET	1	
⚠	69	RSC1198	SMPS SHIELD PLATE	1	
	70	RSC1232	iPhone GROUND PLATE	1	
	71	RYK1800-K	SPK CABINET UNIT L	1	
	72	RYP1801-K	SPK CABINET UNIT R	1	
	73	VHD1224-1A	SCREW	16	
	74	VMG1720	BELT	1	
	75	XTB3+10JFJK	SCREW	1	
	76	RMFX1028	HIMELON	2	
	77	RMQ2144	EPT SEALER BARRIER	2	
	78	RMQ2153	EPT SEALER BARRIER	2	
	80	RMY0433	HEATSINK PLATE	1	
	81	RYQ1137-K1	NET FRAME UNIT L	1	
	82	RYQ1138-K1	NET FRAME UNIT R	1	
			SPEAKERS		
	SP1	L0AA06A00096	SPEAKER	1	
	SP2	L0AA06A00096	SPEAKER	1	
	SP3	RXX0323	PASSIVE RADIATOR UNIT	1	
	SP4	RXX0323	PASSIVE RADIATOR UNIT	1	
			TRAVERSE DECK		
⚠	301	RAE5301Z-V	TRAVERSE UNIT	1	
	302	RME0109-1	FLOATING SPRING	4	
	303	RMS0757-1	FIX PIN	4	
	304	RMG0730-G	FLOATING RUBBER	4	
	305	RMQ2020-1J	MIDDLE CHASSIS	1	
	306	XTN2+6GFJ	SCREW	3	
			PACKING MATERIALS		
	P1	RPG0F10	PACKING CASE	1	
	P2	RPN2511	POLYFOAM	1	
	P3	RPFX0262-1	MIRAMAT	1	
			ACCESSORIES		
⚠	A1	N2QAYC000082	REMOTE CONTROL	1	
	A1-1	RKK-HC57P-K	R/C BATTERY COVER	1	
⚠	A2	K2CB2CB00022	AC CORD	1	
⚠	A3	RQT9742-P	O/I BOOK (En)	1	
	A4	RSAX0002	FM INDOOR ANTENNA	1	
	A5	RGQ0660-K	SAFETY HOLDER	1	

Safety	Ref. No.	Part No.	Part Name & Description	Qty	Remarks
	A6	RMQX1082-S	WALL MOUNT BRACKET	2	
	A7	XTB3+8JFJK-J	SCREW	1	

17.2. Electrical Replacement Parts List

Important Safety Notice

Components identified by ⚠ mark have special characteristics important for safety.
When replacing any of these components, use only manufacturer's specified parts.

RTL (Retention Time Limited)

Note: The marking (RTL) indicates that the Retention Time is Limited for this item.
After the discontinuation of this assembly in production, the item will continue to be available for a specific period of time. The retention period of availability is dependant on the type of assembly, and in accordance with the laws governing part and product retention. After the end of this period, the assembly will no longer be available.

Note:

- When replacing any of these components, be sure to use only manufacturer's specified parts shown in the replacement part list.
- The parenthesized indications on the Remarks column specify the destination & product color (Refer to the cover page for the information).
- Parts without these indications shall be used for all areas.
- This product uses a laser diode. Refer to "Precaution of Laser Diode".
- Capacitor value are in microfarads (uF) unless specified otherwise, P=Pico-farads (pF), F=Farads.
- Resistance values are in ohms, unless specified otherwise, 1K=1000 (OHM).
- All parts mentioned are supplied by PAVCJM unless indicated likewise.
- Parts mentioned [SPG] in the Remarks column are supplied by JAPAN.

E.S.D. standards for Electrostatically Sensitive Devices, refer to "PREVENTION OF ELECTROSTATIC DISCHARGE (ESD) TO ELECTROSTATIC SENSITIVE (ES) DEVICES" section.

Safety	Ref. No.	Part No.	Part Name & Description	Qty	Remarks
			PRINTED CIRCUITS BOARDS		
	PCB1	REP4781E	CD SERVO P.C.B.	1	(RTL)
	PCB2	REP4870BA	MAIN P.C.B.	1	(RTL)
	PCB3	REP4870BC	REMOTE SENSOR P.C.B.	1	(RTL)
	PCB4	REP4871BB	PANEL P.C.B.	1	(RTL)
	PCB5	REP4871BC	INTERLOCK SWITCH P.C.B.	1	(RTL)
	PCB6	REP4871BD	MOTOR P.C.B.	1	(RTL)
	PCB7	REP4904A	BUTTON P.C.B.	1	(RTL)
⚠	PCB8	REP4871BA	SMPS P.C.B.	1	(RTL)
	PCB9	RSNE011B0	BLUETOOTH MODULE	1	JIGS & ADJ
			INTEGRATED CIRCUITS		
	IC52	VUEALLPT058	IC	1	(E.S.D) [SPG] JIGS & ADJ
	IC400	C1AB00003800	IC	1	(E.S.D)
	IC401	C0DBGYY00915	IC	1	(E.S.D)
	IC943	C0JBAC000363	IC	1	(E.S.D)
	IC1101	C0DBAYY01653	IC	1	(E.S.D)
	IC1102	C0DBEYY00146	IC	1	(E.S.D)
	IC1103	C0DBGYY03909	IC	1	(E.S.D)
	IC1104	C0DBAYY01653	IC	1	(E.S.D)
	IC1105	C0DBEYY00146	IC	1	(E.S.D)
	IC1700	C0DACYY00012	IC	1	(E.S.D)
	IC1701	C0DBZMC00006	IC	1	(E.S.D)
	IC6000	C0DBZYY00610	IC	1	(E.S.D)

Safety	Ref. No.	Part No.	Part Name & Description	Qty	Remarks
	IC6001	C0JBAR000586	IC	1	(E.S.D)
	IC6002	RFKWMHC38PM	IC	1	(E.S.D) JIGS & ADJ
	IC6003	C0EBE0000240	IC	1	(E.S.D)
	IC6004	C3EBEY000037	IC	1	(E.S.D)
	IC6006	C0DBZYY00610	IC	1	(E.S.D)
	IC6500	C0DBZYY00555	IC	1	(E.S.D)
	IC7001	MN6627947RK	IC	1	(E.S.D)
	IC7002	C0GBY0000117	IC	1	(E.S.D)
	IC7111	RSNE011B0	BLUETOOTH MODULE	1	JIGS & ADJ
	IC7502	MFI337S3959	IC	1	(E.S.D)
	IC7704	C3ABMY000027	IC	1	(E.S.D)
	IC7851	C3EBFY000029	IC	1	(E.S.D)
			TRANSISTORS		
	Q400	B1ABCF000011	TRANSISTOR	1	(E.S.D)
	Q401	B1ABCF000011	TRANSISTOR	1	(E.S.D)
	Q402	B1ADCE000012	TRANSISTOR	1	(E.S.D)
	Q403	B1ABCF000011	TRANSISTOR	1	(E.S.D)
	Q404	B1CHRC000047	TRANSISTOR	1	(E.S.D)
	Q1700	B1ABGC000001	TRANSISTOR	1	(E.S.D)
	Q1701	DSA500100L	TRANSISTOR	1	(E.S.D)
	Q6004	B1ADCE000012	TRANSISTOR	1	(E.S.D)
	Q6005	B1ABCF000176	TRANSISTOR	1	(E.S.D)
	Q6006	B1ADCF000001	TRANSISTOR	1	(E.S.D)
	Q6007	B1ADCF000001	TRANSISTOR	1	(E.S.D)
	Q6037	B1ADCE000012	TRANSISTOR	1	(E.S.D)
	Q6500	B1ABCF000176	TRANSISTOR	1	(E.S.D)
	Q6501	B1ADCF000001	TRANSISTOR	1	(E.S.D)
	Q6502	B1ADCF000001	TRANSISTOR	1	(E.S.D)
	Q6801	B1ABCF000011	TRANSISTOR	1	(E.S.D)
	Q6802	B1ADCE000012	TRANSISTOR	1	(E.S.D)
	Q7102	B1ADCE000012	TRANSISTOR	1	(E.S.D)

Safety	Ref. No.	Part No.	Part Name & Description	Qty	Remarks
	Q7601	B1ADCF000001	TRANSISTOR	1	(E.S.D)
	QR400	B1GBCFNN0038	TRANSISTOR	1	(E.S.D)
	QR950	B1GBCFJN0038	TRANSISTOR	1	(E.S.D)
	QR1100	B1GBCFNN0038	TRANSISTOR	1	(E.S.D)
	QR1700	B1GBCFJJ0051	TRANSISTOR	1	(E.S.D)
			DIODES		
	D900	B3AAB0000501	DIODE	1	(E.S.D)
	D1100	DA2J10100L	DIODE	1	(E.S.D)
	D1101	DA2J10100L	DIODE	1	(E.S.D)
	D1112	DZ2J062M0L	DIODE	1	(E.S.D)
	D1113	DZ2J062M0L	DIODE	1	(E.S.D)
	D1114	DZ2J062M0L	DIODE	1	(E.S.D)
	D1162	DZ2J062M0L	DIODE	1	(E.S.D)
	D1700	B0ABSM000008	DIODE	1	(E.S.D)
	D1701	B0EBLR000033	DIODE	1	(E.S.D)
	D1702	DZ2J075M0L	DIODE	1	(E.S.D)
	D1703	B0EAKU000002	DIODE	1	(E.S.D)
	D1708	DA22F2100L	DIODE	1	(E.S.D)
	D1709	DZ2J330M0L	DIODE	1	(E.S.D)
	D6001	DA2J10100L	DIODE	1	(E.S.D)
	D6002	DA2J10100L	DIODE	1	(E.S.D)
	D6003	DA2J10100L	DIODE	1	(E.S.D)
	D6004	DA2J10100L	DIODE	1	(E.S.D)
	D6005	DA2J10100L	DIODE	1	(E.S.D)
	D6006	DA2J10100L	DIODE	1	(E.S.D)
	D6007	DA2J10100L	DIODE	1	(E.S.D)
	D6008	B0JCGD000016	DIODE	1	(E.S.D)
	D6030	DA2J10100L	DIODE	1	(E.S.D)
	D6031	DA2J10100L	DIODE	1	(E.S.D)
	D6040	DA2J10100L	DIODE	1	(E.S.D)
	D6041	DA2J10100L	DIODE	1	(E.S.D)
	D6042	DA2J10100L	DIODE	1	(E.S.D)
	D6043	DA2J10100L	DIODE	1	(E.S.D)
	D6801	DA2J10100L	DIODE	1	(E.S.D)
	D6802	DA2J10100L	DIODE	1	(E.S.D)
	D6803	DA2J10100L	DIODE	1	(E.S.D)
	D6804	DA2J10100L	DIODE	1	(E.S.D)
	D6806	DZ2J051M0L	DIODE	1	(E.S.D)
	D7111	B0JCGD000016	DIODE	1	(E.S.D)
	D7112	DA2J10100L	DIODE	1	(E.S.D)
	D7650	DZ2J056M0L	DIODE	1	(E.S.D)
⚠	Z1752	ERZV10V511CS	ZNR	1	(E.S.D)
			VARISTOR		
	VA51	EZAEG2A50AX	VARISTOR	1	
			SWITCHES		
	S641	K0L1BA000078	SW ABN	1	
	S642	K0L1BA000078	SW RIGHT	1	
	S643	K0L1BA000078	SW CENTER	1	
	S901	EVQ11G04M	SW POWER	1	
	S902	EVQ11G04M	SW IPOD OP/CL	1	
	S904	EVQ11G04M	SW MULTI FN	1	
	S906	EVQ11G04M	SW STOP	1	
	S907	EVQ11G04M	SW PLAY/PAUSE	1	
	S910	EVQ11G04M	SW DBASS	1	
	S911	EVQ11G04M	SW REV	1	
	S912	EVQ11G04M	SW FWD	1	
	S913	EVQ11G04M	SW VOL-	1	
	S914	EVQ11G04M	SW VOL+	1	
	S915	EVQ11G04M	SW CD OPEN	1	
	S931	K0C111A00010	SW LEFT	1	
	S7201	K0L1BA000158	SW RESET	1	
			CONNECTORS		
	CN400	K1KA02AA0180	2P CONNECTOR	1	
	CN401	K1KA02AA0180	2P CONNECTOR	1	
	CN900	K1MN15B00121	15P CONNECTOR	1	

Safety	Ref. No.	Part No.	Part Name & Description	Qty	Remarks
	CN931	K1KA04BA0061	4P CONNECTOR	1	
	CN941	K1MN16BA0005	16P CONNECTOR	1	
	CN1100	K1KB07A00028	7P CONNECTOR	1	
	CN6005	K1MY16AA0267	16P CONNECTOR	1	
	CN6006	K1MN30A00019	30P CONNECTOR	1	
	CN6007	K1MN15AA0046	15P CONNECTOR	1	
	CN6009	K1MN06C00005	6P CONNECTOR	1	
	CN7001	K1MN24BA0197	24P CONNECTOR	1	
	CN7002	K1MN30B00046	30P CONNECTOR	1	
	CN7031	K1MN06C00005	6P CONNECTOR	1	
	CN7801	K1KA05BA0014	5P CONNECTOR	1	
	JK6000	K1FY104B0078	USB CONNECTOR	1	
	P900	K1KB08B00041	8P CONNECTOR	1	
	P941	K1KA05BA0061	5P CONNECTOR	1	
	P942	K1KA04BA0061	4P CONNECTOR	1	
	P945	K1KA05BA0047	5P CONNECTOR	1	
	P1700	K1KA07BA0063	7P CONNECTOR	1	
	P6801	K1KA08AA0031	8P CONNECTOR	1	
			COILS AND INDUC-TORS		
	K7724	J0JYB0000013	INDUCTOR	1	
	L51	G1CR18JA0020	INDUCTOR	1	
	L60	J0JYC0000196	INDUCTOR	1	
	L400	G1C150M00023	INDUCTOR	1	
	L401	G1C150M00023	INDUCTOR	1	
	L402	G1C150M00023	INDUCTOR	1	
	L403	G1C150M00023	INDUCTOR	1	
	L502	J0JYC0000348	INDUCTOR	1	
	L504	J0JHC0000046	INDUCTOR	1	
	L1102	G1C100MA0226	INDUCTOR	1	
	L1105	G1C100MA0226	INDUCTOR	1	
	L1700	G1C100K00019	INDUCTOR	1	
⚠	L1702	G0B922G00002	LINE FILTER	1	
	L6006	J0JYC0000366	INDUCTOR	1	
	L7231	J0JYC0000305	INDUCTOR	1	
	L7336	J0JYB0000013	INDUCTOR	1	
	L7367	J0JCC0000405	INDUCTOR	1	
	LB51	J0JBC0000134	INDUCTOR	1	
	LB61	J0JHC0000118	INDUCTOR	1	
	LB400	J0JHC0000118	INDUCTOR	1	
	LB401	J0JHC0000118	INDUCTOR	1	
	LB402	J0JBC0000134	INDUCTOR	1	
	LB403	J0JBC0000134	INDUCTOR	1	
	LB406	J0JHC0000034	INDUCTOR	1	
	LB407	J0JHC0000034	INDUCTOR	1	
	LB408	J0JHC0000034	INDUCTOR	1	
	LB409	J0JHC0000034	INDUCTOR	1	
	LB411	J0JYC0000305	INDUCTOR	1	
	LB1101	J0JBC0000134	INDUCTOR	1	
	LB1103	J0JHC0000046	INDUCTOR	1	
	LB1105	J0JGC0000063	INDUCTOR	1	
	LB1106	J0JGC0000063	INDUCTOR	1	
	LB1107	J0JGC0000063	INDUCTOR	1	
	LB1161	J0JHC0000046	INDUCTOR	1	
	LB1162	J0JHC0000118	INDUCTOR	1	
	LB1221	J0JGC0000063	INDUCTOR	1	
	LB6000	J0JHC0000046	INDUCTOR	1	
	LB6001	J0JHC0000118	INDUCTOR	1	
	LB6002	J0JHC0000118	INDUCTOR	1	
	LB6003	J0JHC0000118	INDUCTOR	1	
	LB6030	J0JYC0000196	INDUCTOR	1	
	LB6802	J0JHC0000118	INDUCTOR	1	
	LB6803	J0JHC0000118	INDUCTOR	1	
	LB6805	J0JHC0000118	INDUCTOR	1	
	LB7031	D0GBR00J0004	0 1/10W	1	
	LB7033	J0JBC0000134	INDUCTOR	1	
	LB7034	J0JBC0000134	INDUCTOR	1	
			TRANSFORMER		
⚠	T1700	G4DYZ0000071	TRANSFORMER	1	

Safety	Ref. No.	Part No.	Part Name & Description	Qty	Remarks
			REMOTE SENSOR		
	IR941	B3RAB0000110	REMOTE SENSOR	1	
			PHOTO COUPLER		
⚠	PC1702	B3PBA0000579	PHOTO COUPLER	1	
			TERMINALS		
	ZJ1100	K4CZ01000027	TERMINAL	1	
	ZJ1701	K4CZ01000027	TERMINAL	1	
	ZJ1702	K4CZ01000027	TERMINAL	1	
			OSCILLATORS		
	X400	H0J245500110	OSCILLATOR	1	
	X6000	H2B800400007	OSCILLATOR	1	
	X6001	H0A327200181	OSCILLATOR	1	
	X7201	H2D169500017	OSCILLATOR	1	
	X7205	H0J120500076	OSCILLATOR	1	
			LCD DISPLAY		
	FL6801	A2BB00000186	LCD DISPLAY	1	
			FUSE		
⚠	F1	K5G202Y00006	FUSE	1	
			JACKS		
	JK51	K4ZZ02000103	JK FM ANT	1	
⚠	P1751	K2AB2B000007	AC INLET	1	
			CHIP JUMPERS		
	LB52	D0GAR00J0005	0 1/16W	1	
	LB6004	D0GBR00J0004	0 1/10W	1	
	LB6801	D0GBR00J0004	0 1/10W	1	
	LB6804	D0GBR00J0004	0 1/10W	1	
	LB7032	D0GBR00J0004	0 1/10W	1	
	K401	D0GBR00J0004	0 1/10W	1	
	K7001	D0GBR00J0004	0 1/10W	1	
	K7011	D0GBR00J0004	0 1/10W	1	
	K7101	D0GBR00J0004	0 1/10W	1	
	K7102	D0GBR00J0004	0 1/10W	1	
	K7111	D0GBR00J0004	0 1/10W	1	
	K7211	D0GBR00J0004	0 1/10W	1	
	K7212	D0GBR00J0004	0 1/10W	1	
	K7258	D0GBR00J0004	0 1/10W	1	
	K7278	D0GBR00J0004	0 1/10W	1	
	K7342	D0GBR00J0004	0 1/10W	1	
	W6802	D0GDR00JA017	0 1/8W	1	
			RESISTORS		
	K7202	D0GB101JA065	100 1/10W	1	
	K7701	D0GB271JA065	270 1/10W	1	
	K7702	D0GB271JA065	270 1/10W	1	
	K7703	D0GB271JA065	270 1/10W	1	
	R51	D0GB222JA065	2.2K 1/10W	1	
	R52	D0GB561JA065	560 1/10W	1	
	R53	D0GA472JA023	4.7K 1/16W	1	
	R54	D0GA472JA023	4.7K 1/16W	1	
	R55	D0GA221JA023	220 1/16W	1	
	R56	D0GB221JA065	220 1/10W	1	
	R57	D0GA102JA023	1K 1/16W	1	
	R59	D0GB222JA065	2.2K 1/10W	1	
	R60	D0GB222JA065	2.2K 1/10W	1	
	R401	D0GB222JA065	2.2K 1/10W	1	
	R402	D0GB222JA065	2.2K 1/10W	1	

Safety	Ref. No.	Part No.	Part Name & Description	Qty	Remarks
	R403	D0GB101JA065	100 1/10W	1	
	R404	D0GB104JA065	100K 1/10W	1	
	R405	D0GB104JA065	100K 1/10W	1	
	R406	D0GB104JA065	100K 1/10W	1	
	R407	D0GB104JA065	100K 1/10W	1	
	R408	D0GB104JA065	100K 1/10W	1	
	R409	D0GB104JA065	100K 1/10W	1	
	R410	D0GB223JA065	22K 1/10W	1	
	R411	D0GB472JA065	4.7K 1/10W	1	
	R412	D0GB105JA065	1M 1/10W	1	
	R413	D0GB152JA065	1.5K 1/10W	1	
	R414	D0GB101JA065	100 1/10W	1	
	R415	D0GB101JA065	100 1/10W	1	
	R416	D0GB101JA065	100 1/10W	1	
	R417	D0GB101JA065	100 1/10W	1	
	R418	D0GB104JA065	100K 1/10W	1	
	R419	D0GB104JA065	100K 1/10W	1	
	R443	D0GBR00J0004	0 1/10W	1	
	R444	D0GB473JA065	47K 1/10W	1	
	R446	D0GB102JA065	1K 1/10W	1	
	R447	D0GB102JA065	1K 1/10W	1	
	R448	D0GB561JA065	560 1/10W	1	
	R449	D0GB473JA065	47K 1/10W	1	
	R451	D0GB221JA065	220 1/10W	1	
	R453	D0GB273JA065	27K 1/10W	1	
	R455	D0GFR00J0005	0 1/4W	1	
	R456	D0GFR00J0005	0 1/4W	1	
	R471	D0GB221JA065	220 1/10W	1	
	R472	D0GB221JA065	220 1/10W	1	
	R473	D0GB221JA065	220 1/10W	1	
	R474	D0GB221JA065	220 1/10W	1	
	R475	D0GB221JA065	220 1/10W	1	
	R476	D0GB221JA065	220 1/10W	1	
	R477	D0GB221JA065	220 1/10W	1	
	R478	D0GB221JA065	220 1/10W	1	
	R479	D0GB221JA065	220 1/10W	1	
	R480	D0GB274JA065	270K 1/10W	1	
	R900	D0GBR00J0004	0 1/10W	1	
	R902	D0GB122JA065	1.2K 1/10W	1	
	R903	D0GB122JA065	1.2K 1/10W	1	
	R904	D0GB222JA065	2.2K 1/10W	1	
	R905	D0GB332JA065	3.3K 1/10W	1	
	R906	D0GB472JA065	4.7K 1/10W	1	
	R907	D0GB752JA065	7.5K 1/10W	1	
	R911	D0GB122JA065	1.2K 1/10W	1	
	R912	D0GB122JA065	1.2K 1/10W	1	
	R913	D0GB222JA065	2.2K 1/10W	1	
	R914	D0GB332JA065	3.3K 1/10W	1	
	R921	D0GB472JA065	4.7K 1/10W	1	
	R941	D0GB330JA065	33 1/10W	1	
	R942	D0GBR00J0004	0 1/10W	1	
	R943	D0GB104JA065	100K 1/10W	1	
	R944	D0GB102JA065	1K 1/10W	1	
	R945	D0GB152JA065	1.5K 1/10W	1	
	R950	D0GB182JA065	1.8K 1/10W	1	
	R1102	D0GBR00J0004	0 1/10W	1	
	R1103	ERJ3RBD4642V	46.4K 1/16W	1	
	R1104	D1BB1002A074	10K 1/10W	1	
	R1110	D0GFR00J0005	0 1/4W	1	
	R1112	D0GB682JA065	6.8K 1/10W	1	
	R1114	D0GB100JA065	10 1/10W	1	
	R1116	ERJ3RBD4642V	46.4K 1/16W	1	
	R1118	D1BB1002A074	10K 1/10W	1	
	R1119	D0GB101JA065	100 1/10W	1	
	R1123	D0GFR00J0005	0 1/4W	1	
	R1124	D0GB682JA065	6.8K 1/10W	1	
	R1127	ERJ3GEYF474V	470K 1/10W	1	
	R1128	D1BB1003A074	100K 1/10W	1	
	R1129	D1BB1003A074	100K 1/10W	1	
	R1130	D1BB3302A074	33K 1/10W	1	
	R1221	D0GB184JA065	180K 1/10W	1	
	R1222	D0GB473JA065	47K 1/10W	1	
	R1700	D0GD4R7JA052	4.7 1/8W	1	

Safety	Ref. No.	Part No.	Part Name & Description	Qty	Remarks
	R1701	D0GB152JA065	1.5K 1/10W	1	
	R1702	D0GB682JA065	6.8K 1/10W	1	
	R1703	D0GB332JA065	3.3K 1/10W	1	
	R1704	ERJ1TYJ333U	33K 1W	1	
	R1705	D0GB103JA065	10K 1/10W	1	
	R1706	D0GB223JA065	22K 1/10W	1	
	R1707	D0GB563JA065	56K 1/10W	1	
	R1708	ERJ1TYJ220U	22 1W	1	
	R1709	D0GB101JA065	100 1/10W	1	
	R1710	D1BB4702A074	47K 1/10W	1	
	R1711	D0GB103JA065	10K 1/10W	1	
	R1716	D0GB394JA065	390K 1/10W	1	
	R1717	D0GB122JA065	1.2K 1/10W	1	
	R1719	ERJ1TRQJR22U	0.22 1W	1	
⚠	R1724	ERJ12YJ105U	1M 1/2W	1	
	R1725	D0GB223JA065	22K 1/10W	1	
⚠	R1726	ERJ12YJ105U	1M 1/2W	1	
	R1727	D0GB104JA065	100K 1/10W	1	
	R1728	D1BB8201A074	8.2K 1/10W	1	
	R1729	D0GD220JA017	22 1/8W	1	
	R1730	D1BB6801A074	6.8K 1/10W	1	
	R6000	D1BB5102A073	51K 1/10W	1	
	R6001	D1BB5102A073	51K 1/10W	1	
	R6002	D0GB472JA065	4.7K 1/10W	1	
	R6003	D0GB472JA065	4.7K 1/10W	1	
	R6004	D0GBR00J0004	0 1/10W	1	
	R6005	D1BB5102A073	51K 1/10W	1	
	R6006	D1BB4302A073	43K 1/10W	1	
	R6008	D0GB101JA065	100 1/10W	1	
	R6009	D1BB5102A073	51K 1/10W	1	
	R6010	D0GB473JA065	47K 1/10W	1	
	R6011	D1BB7502A073	75K 1/10W	1	
	R6012	D0GBR00J0004	0 1/10W	1	
	R6014	D0GB104JA065	100K 1/10W	1	
	R6016	D0GB102JA065	1K 1/10W	1	
	R6019	D0GB273JA065	27K 1/10W	1	
	R6022	D0GB472JA065	4.7K 1/10W	1	
	R6023	D0GB472JA065	4.7K 1/10W	1	
	R6024	D0GB101JA065	100 1/10W	1	
	R6025	D0GB101JA065	100 1/10W	1	
	R6026	D0GB104JA065	100K 1/10W	1	
	R6028	D0GB104JA065	100K 1/10W	1	
	R6029	D0GB101JA065	100 1/10W	1	
	R6030	D0GB101JA065	100 1/10W	1	
	R6031	D0GB101JA065	100 1/10W	1	
	R6032	D0GB104JA065	100K 1/10W	1	
	R6033	D0GB104JA065	100K 1/10W	1	
	R6037	D0GB473JA065	47K 1/10W	1	
	R6038	D0GB103JA065	10K 1/10W	1	
	R6039	D0GB102JA065	1K 1/10W	1	
	R6041	D0GB104JA065	100K 1/10W	1	
	R6042	D0GB472JA065	4.7K 1/10W	1	
	R6043	D0GB103JA065	10K 1/10W	1	
	R6044	D0GB101JA065	100 1/10W	1	
	R6045	D0GB101JA065	100 1/10W	1	
	R6046	D0GB101JA065	100 1/10W	1	
	R6047	D0GB102JA065	1K 1/10W	1	
	R6048	D0GB101JA065	100 1/10W	1	
	R6052	D0GBR00J0004	0 1/10W	1	
	R6054	D0GB224JA065	220K 1/10W	1	
	R6055	D0GB101JA065	100 1/10W	1	
	R6056	D0GB103JA065	10K 1/10W	1	
	R6057	D0GB102JA065	1K 1/10W	1	
	R6058	D0GB822JA065	8.2K 1/10W	1	
	R6059	D0GB102JA065	1K 1/10W	1	
	R6060	D0GB101JA065	100 1/10W	1	
	R6061	D0GB102JA065	1K 1/10W	1	
	R6062	D0GB101JA065	100 1/10W	1	
	R6063	D0GB104JA065	100K 1/10W	1	
	R6064	D0GB101JA065	100 1/10W	1	
	R6065	D0GB101JA065	100 1/10W	1	
	R6066	D0GB101JA065	100 1/10W	1	
	R6068	D0GB101JA065	100 1/10W	1	

Safety	Ref. No.	Part No.	Part Name & Description	Qty	Remarks
	R6070	D0GB104JA065	100K 1/10W	1	
	R6072	D0GB103JA065	10K 1/10W	1	
	R6074	D0GB101JA065	100 1/10W	1	
	R6075	D0GB102JA065	1K 1/10W	1	
	R6076	D0GB103JA065	10K 1/10W	1	
	R6077	D0GB473JA065	47K 1/10W	1	
	R6079	D0GB102JA065	1K 1/10W	1	
	R6080	D0GB152JA065	1.5K 1/10W	1	
	R6082	D0GB101JA065	100 1/10W	1	
	R6084	D0GB104JA065	100K 1/10W	1	
	R6086	D0GB101JA065	100 1/10W	1	
	R6087	D0GB101JA065	100 1/10W	1	
	R6088	D0GB101JA065	100 1/10W	1	
	R6089	D0GB104JA065	100K 1/10W	1	
	R6090	D0GB101JA065	100 1/10W	1	
	R6091	D0GB101JA065	100 1/10W	1	
	R6092	D0GB472JA065	4.7K 1/10W	1	
	R6093	D0GB101JA065	100 1/10W	1	
	R6094	D0GB101JA065	100 1/10W	1	
	R6096	D0GB472JA065	4.7K 1/10W	1	
	R6097	D0GB101JA065	100 1/10W	1	
	R6098	D0GB101JA065	100 1/10W	1	
	R6099	D0GB101JA065	100 1/10W	1	
	R6100	D0GB101JA065	100 1/10W	1	
	R6102	D0GB332JA065	3.3K 1/10W	1	
	R6103	D0GB101JA065	100 1/10W	1	
	R6104	D0GB101JA065	100 1/10W	1	
	R6105	D0GB104JA065	100K 1/10W	1	
	R6106	D0GB101JA065	100 1/10W	1	
	R6107	D0GB101JA065	100 1/10W	1	
	R6109	D0GB101JA065	100 1/10W	1	
	R6110	D0GB104JA065	100K 1/10W	1	
	R6111	D0GB104JA065	100K 1/10W	1	
	R6112	D0GB104JA065	100K 1/10W	1	
	R6113	D0GB152JA065	1.5K 1/10W	1	
	R6114	D0GB152JA065	1.5K 1/10W	1	
	R6116	D0GB101JA065	100 1/10W	1	
	R6117	D0GB101JA065	100 1/10W	1	
	R6118	D0GB101JA065	100 1/10W	1	
	R6119	D0GB101JA065	100 1/10W	1	
	R6129	D0GB101JA065	100 1/10W	1	
	R6132	D0GB101JA065	100 1/10W	1	
	R6135	D0GB101JA065	100 1/10W	1	
	R6136	D0GB101JA065	100 1/10W	1	
	R6137	D0GB101JA065	100 1/10W	1	
	R6141	D0GB472JA065	4.7K 1/10W	1	
	R6142	D0GB472JA065	4.7K 1/10W	1	
	R6143	D0GB562JA065	5.6K 1/10W	1	
	R6144	D0GB222JA065	2.2K 1/10W	1	
	R6148	D0GB101JA065	100 1/10W	1	
	R6150	D0GB101JA065	100 1/10W	1	
	R6151	D0GB101JA065	100 1/10W	1	
	R6152	D0GB101JA065	100 1/10W	1	
	R6153	D0GB101JA065	100 1/10W	1	
	R6154	D0GB101JA065	100 1/10W	1	
	R6318	D0GB101JA065	100 1/10W	1	
	R6500	D1BB4302A073	43K 1/10W	1	
	R6504	D0GB473JA065	47K 1/10W	1	
	R6505	D0GB472JA065	4.7K 1/10W	1	
	R6506	D0GB222JA065	2.2K 1/10W	1	
	R6507	D0GB562JA065	5.6K 1/10W	1	
	R6508	D0GB472JA065	4.7K 1/10W	1	
	R6509	D1BB7502A073	75K 1/10W	1	
	R6801	D0GB1R0JA065	1 1/10W	1	
	R6802	D0GB473JA065	47K 1/10W	1	
	R6803	D0GB100JA065	10 1/10W	1	
	R6804	D0GB220JA065	22 1/10W	1	
	R6805	D0GB470JA065	47 1/10W	1	
	R6806	D0GB473JA065	47K 1/10W	1	
	R6810	D0GF390JA048	39 1/4W	1	
	R6811	D0GF390JA048	39 1/4W	1	
	R6812	D0GBR00J0004	0 1/10W	1	
	R6813	D0GBR00J0004	0 1/10W	1	

Safety	Ref. No.	Part No.	Part Name & Description	Qty	Remarks
	R6814	D0GBR00J0004	0 1/10W	1	
	R7033	D0GB103JA065	10K 1/10W	1	
	R7034	D0GB103JA065	10K 1/10W	1	
	R7102	D0GBR00J0004	0 1/10W	1	
	R7103	D0GBR00J0004	0 1/10W	1	
	R7104	D0GB474JA065	470K 1/10W	1	
	R7106	D0GA473JA023	47K 1/16W	1	
	R7111	D0GB103JA065	10K 1/10W	1	
	R7111	D0GDR00J0004	0 1/8W	1	
	R7151	D0GBR00J0004	0 1/10W	1	
	R7158	D0GB330JA065	33 1/10W	1	
	R7173	D0GB101JA065	100 1/10W	1	
	R7176	D0GB101JA065	100 1/10W	1	
	R7205	D0GB102JA065	1K 1/10W	1	
	R7207	D0GB103JA065	10K 1/10W	1	
	R7208	D0GBR00J0004	0 1/10W	1	
	R7211	D0GB823JA065	82K 1/10W	1	
	R7212	D0GB821JA065	820 1/10W	1	
	R7213	D0GB272JA065	2.7K 1/10W	1	
	R7214	D0GB471JA065	470 1/10W	1	
	R7217	D0GB102JA065	1K 1/10W	1	
	R7218	D0GB102JA065	1K 1/10W	1	
	R7220	D0GB105JA065	1M 1/10W	1	
	R7221	D0GB101JA065	100 1/10W	1	
	R7253	D0GB101JA065	100 1/10W	1	
	R7254	D0GB102JA065	1K 1/10W	1	
	R7255	D0GB103JA065	10K 1/10W	1	
	R7262	D0GB101JA065	100 1/10W	1	
	R7264	D0GB101JA065	100 1/10W	1	
	R7265	D0GB101JA065	100 1/10W	1	
	R7266	D0GB101JA065	100 1/10W	1	
	R7267	D0GB102JA065	1K 1/10W	1	
	R7315	D0GB102JA065	1K 1/10W	1	
	R7321	D0GB152JA065	1.5K 1/10W	1	
	R7322	D0GB562JA065	5.6K 1/10W	1	
	R7323	D0GB332JA065	3.3K 1/10W	1	
	R7325	D0GB101JA065	100 1/10W	1	
	R7327	D0GB562JA065	5.6K 1/10W	1	
	R7328	D0GB273JA065	27K 1/10W	1	
	R7329	D0GB472JA065	4.7K 1/10W	1	
	R7331	D0GB473JA065	47K 1/10W	1	
	R7332	D0GB123JA065	12K 1/10W	1	
	R7335	D0GB101JA065	100 1/10W	1	
	R7336	D0GB100JA065	10 1/10W	1	
	R7341	D0GB122JA065	1.2K 1/10W	1	
	R7349	D0GB104JA065	100K 1/10W	1	
	R7504	D0GB222JA065	2.2K 1/10W	1	
	R7505	D0GB222JA065	2.2K 1/10W	1	
	R7601	D0GB4R7JA065	4.7 1/10W	1	
	R7650	D0GB5R6JA065	5.6 1/10W	1	
	R7702	D0GBR00J0004	0 1/10W	1	
	R7707	D0GBR00J0004	0 1/10W	1	
	R7712	D0GBR00J0004	0 1/10W	1	
	R7717	D0GBR00J0004	0 1/10W	1	
	R7721	D0GBR00J0004	0 1/10W	1	
	R7731	D0GBR00J0004	0 1/10W	1	
	R7761	D0GB225JA065	2.2M 1/10W	1	
	R7853	D0GB332JA065	3.3K 1/10W	1	
	R7854	D0GB332JA065	3.3K 1/10W	1	
	R7896	D0GB102JA065	1K 1/10W	1	
	R7901	D0GB330JA065	33 1/10W	1	
	R7902	D0GB330JA065	33 1/10W	1	
	R7903	D0GB223JA065	22K 1/10W	1	
	R7904	D0GB223JA065	22K 1/10W	1	
			CAPACITORS		
	C51	F1H1H102B047	1000pF 50V	1	
	C61	F1G1C104A077	0.1uF 16V	1	
	C62	F1G1C104A077	0.1uF 16V	1	
	C65	D0GBR00J0004	0 1/10W	1	
	C66	F1H1H330A230	33pF 50V	1	
	C67	F1H1H3R0A508	3pF 50V	1	

Safety	Ref. No.	Part No.	Part Name & Description	Qty	Remarks
	C68	F1J1A106A043	10uF 10V	1	
	C69	F1J1A106A043	10uF 10V	1	
	C70	F1H1H101B052	100pF 50V	1	
	C71	F1H1H101B052	100pF 50V	1	
	C400	F1H0J1060006	10uF 6.3V	1	
	C401	F1H0J1060006	10uF 6.3V	1	
	C402	F1H0J1060006	10uF 6.3V	1	
	C403	F1H0J1060006	10uF 6.3V	1	
	C404	F1H1A105A036	1uF 10V	1	
	C405	F1H0J1060006	10uF 6.3V	1	
	C406	F1J1E105A287	1uF 25V	1	
	C407	F1J1E105A287	1uF 25V	1	
	C408	F1J1E105A287	1uF 25V	1	
	C409	F1J1E105A287	1uF 25V	1	
	C410	F1H1H104B047	0.1uF 50V	1	
	C411	F1H1H104B047	0.1uF 50V	1	
	C412	F1H1H104B047	0.1uF 50V	1	
	C413	F1H1H104B047	0.1uF 50V	1	
	C414	F1J1H104A717	0.1uF 50V	1	
	C415	F1J1H104A717	0.1uF 50V	1	
	C416	F1H1H104B047	0.1uF 50V	1	
	C417	F1H1H102B047	1000pF 50V	1	
	C418	F1H1H4700006	47pF 50V	1	
	C419	F1H1H4700006	47pF 50V	1	
	C420	F1J1A106A043	10uF 10V	1	
	C421	F1J1A106A043	10uF 10V	1	
	C422	F1H1A105A036	1uF 10V	1	
	C424	F1H1A105A036	1uF 10V	1	
	C425	F1H1A105A036	1uF 10V	1	
	C426	F1H1H120A889	12pF 50V	1	
	C427	F1H1H150A889	15pF 50V	1	
	C428	F1H1H104B047	0.1uF 50V	1	
	C429	F1H1H103B047	0.01uF 50V	1	
	C434	F2A1E2210093	220uF 25V	1	
	C435	F1H1H102B047	1000pF 50V	1	
	C436	F1H1H102B047	1000pF 50V	1	
	C437	F1H1H102B047	1000pF 50V	1	
	C438	F1H1H102B047	1000pF 50V	1	
	C454	F1H1H102B047	1000pF 50V	1	
	C455	F1H1H102B047	1000pF 50V	1	
	C458	F1H1H102B047	1000pF 50V	1	
	C459	F1H1H102B047	1000pF 50V	1	
	C501	F1G1C104A077	0.1uF 16V	1	
	C502	F1G1C104A077	0.1uF 16V	1	
	C941	F1H1A105A036	1uF 10V	1	
	C945	F1H1H104B047	0.1uF 50V	1	
	C1000	F1H1A105A036	1uF 10V	1	
	C1001	F1H1H102B047	1000pF 50V	1	
	C1100	F1H0J1060006	10uF 6.3V	1	
	C1101	F1H1A105A036	1uF 10V	1	
	C1104	F1K1C2260001	22uF 16V	1	
	C1109	F1G1C1030008	0.01uF 16V	1	
	C1110	F1J1H1020015	1000pF 50V	1	
	C1113	F1H1H104B047	0.1uF 50V	1	
	C1115	F1H1H682B047	6800pF 50V	1	
	C1119	F1H1H473A220	0.047uF 50V	1	
	C1120	F1H0J4750004	4.7uF 6.3V	1	
	C1121	F2A1E2210093	220uF 25V	1	
	C1122	F1J1E4750002	4.7uF 25V	1	
	C1123	F1H1H222A219	2200pF 50V	1	
	C1125	F1H1H103B047	0.01uF 50V	1	
	C1133	F1H1H102B047	1000pF 50V	1	
	C1135	F1J1A106A043	10uF 10V	1	
	C1136	F1K1C2260001	22uF 16V	1	
	C1138	F1G1C1030008	0.01uF 16V	1	
	C1139	F1J1H1020015	1000pF 50V	1	
	C1140	F1H1H104B047	0.1uF 50V	1	
	C1141	F1H1H682B047	6800pF 50V	1	
	C1144	F2A1E2210093	220uF 25V	1	
	C1150	F1J1A106A043	10uF 10V	1	
	C1151	F1J1A106A043	10uF 10V	1	
	C1152	F1J1A106A043	10uF 10V	1	
	C1153	F1J1A106A043	10uF 10V	1	

Safety	Ref. No.	Part No.	Part Name & Description	Qty	Remarks
	C1169	F1H1A105A036	1uF 10V	1	
	C1221	F1H1C105A118	1uF 16V	1	
	C1222	F1J1E105A287	1uF 25V	1	
	C1700	F1H1H221A748	220pF 50V	1	
	C1701	F1K1V106A010	10uF 35V	1	
⚠	C1702	F0CAF224A105	0.22uF	1	
	C1703	F2A1E1020114	1000uF 25V	1	
	C1704	F1H1H102B047	1000pF 50V	1	
	C1705	F1K2J472A010	4700pF 630V	1	
	C1706	F2A2D820A404	82uF 200V	1	
	C1708	F1H1H102B047	1000pF 50V	1	
	C1709	F1H1H104B047	0.1uF 50V	1	
⚠	C1710	F1BAF471A013	470pF	1	
	C1712	F1H1H104B047	0.1uF 50V	1	
	C1713	F1K2J221A014	220pF 630V	1	
	C1714	F1H1H104B047	0.1uF 50V	1	
	C1715	F1H1H104B047	0.1uF 50V	1	
	C1716	F1H1H103B047	0.01uF 50V	1	
	C1719	F1H1E474A116	0.47uF 25V	1	
	C1720	F1K3D100A009	10pF 2000V	1	
⚠	C1725	F0CAF104A105	0.1uF	1	
	C1726	F1H1H391A889	390pF 50V	1	
⚠	C1727	F1BAF1020020	1000pF	1	
⚠	C1728	F1BAF1020020	1000pF	1	
	C6000	F1H1H104B047	0.1uF 50V	1	
	C6002	F1H1H101B052	100pF 50V	1	
	C6003	F1G1A1040006	0.1uF 10V	1	
	C6004	F1H1H102B047	1000pF 50V	1	
	C6005	F1H1H102B047	1000pF 50V	1	
	C6006	F1G1A1040006	0.1uF 10V	1	
	C6007	F1H1H104B047	0.1uF 50V	1	
	C6008	F1G1A1040006	0.1uF 10V	1	
	C6009	F1J1A106A043	10uF 10V	1	
	C6012	F1H1H104B047	0.1uF 50V	1	
	C6014	F1H1H102B047	1000pF 50V	1	
	C6017	F1H1H102B047	1000pF 50V	1	
	C6019	F1H1H220A889	22pF 50V	1	
	C6020	F1H1H102B047	1000pF 50V	1	
	C6021	F1H1H220A889	22pF 50V	1	
	C6022	F1H1A224A107	0.22uF 10V	1	
	C6023	F1H1H104B047	0.1uF 50V	1	
	C6026	F1H1H102B047	1000pF 50V	1	
	C6027	F1H1H104B047	0.1uF 50V	1	
	C6028	F1H1H104B047	0.1uF 50V	1	
	C6029	F1H1H104B047	0.1uF 50V	1	
	C6033	F1H1H104B047	0.1uF 50V	1	
	C6034	F1H1H102B047	1000pF 50V	1	
	C6035	F1H1A105A036	1uF 10V	1	
	C6036	F1H1H223B047	0.022uF 50V	1	
	C6037	F1H1H223B047	0.022uF 50V	1	
	C6039	F1H1H104B047	0.1uF 50V	1	
	C6040	F1J1A106A043	10uF 10V	1	
	C6046	F2A1A330A010	33uF 10V	1	
	C6047	F1H1H331A885	330pF 50V	1	
	C6049	F1H1H223B047	0.022uF 50V	1	
	C6050	F1H1H102B047	1000pF 50V	1	
	C6500	D0GB102JA065	1K 1/10W	1	
	C6501	F1H1H104B047	0.1uF 50V	1	
	C6502	F2G0J2210020	220uF 6.3V	1	
	C6503	F1H1A105A036	1uF 10V	1	
	C6801	F1H1A105A062	1uF 10V	1	
	C6802	F1J1V1050001	1uF 35V	1	
	C6803	F1H1E105A153	1uF 25V	1	
	C6804	F1H1E105A153	1uF 25V	1	
	C6805	F1J1E105A287	1uF 25V	1	
	C6807	F1H1E105A153	1uF 25V	1	
	C6808	F1H1E105A153	1uF 25V	1	
	C6812	F1J1V1050001	1uF 35V	1	
	C6813	F1J1E105A287	1uF 25V	1	
	C6814	F1J1E105A287	1uF 25V	1	
	C7003	F1J1H101A619	100pF 50V	1	
	C7007	F1H1H101A889	100pF 50V	1	
	C7031	F1H1H101A889	100pF 50V	1	

Safety	Ref. No.	Part No.	Part Name & Description	Qty	Remarks
	C7035	F1J1A106A043	10uF 10V	1	
	C7102	F1H1A474A107	0.47uF 10V	1	
	C7107	F1H1H223B047	0.022uF 50V	1	
	C7142	F1H1H332B047	3300pF 50V	1	
	C7150	F1H1C104A120	0.1uF 16V	1	
	C7151	F1H1C104A120	0.1uF 16V	1	
	C7152	F1G1A1040006	0.1uF 10V	1	
	C7154	F1H1C104A120	0.1uF 16V	1	
	C7155	F1H1A105A113	1uF 10V	1	
	C7156	F1H1A105A113	1uF 10V	1	
	C7157	F1H1H103B047	0.01uF 50V	1	
	C7158	F1H1C104A120	0.1uF 16V	1	
	C7159	F1H1C104A120	0.1uF 16V	1	
	C7160	F1H1C104A120	0.1uF 16V	1	
	C7161	F1G1A1040006	0.1uF 10V	1	
	C7162	F1G1A1040006	0.1uF 10V	1	
	C7163	F1G1A1040006	0.1uF 10V	1	
	C7166	F1H1H103B047	0.01uF 50V	1	
	C7204	F1H1H103B047	0.01uF 50V	1	
	C7205	F1H1H270B052	27pF 50V	1	
	C7206	F1H1H270B052	27pF 50V	1	
	C7207	F1J1A106A041	10uF 10V	1	
	C7208	F1J1A106A041	10uF 10V	1	
	C7213	F1H1A334A028	0.33uF 10V	1	
	C7216	F1H1H681A885	680pF 50V	1	
	C7217	F1G1A1040006	0.1uF 10V	1	
	C7218	F1H1C823A178	0.082uF 16V	1	
	C7221	F1H1H7R0A503	7.0pF 50V	1	
	C7222	F1H1H7R0A503	7.0pF 50V	1	
	C7223	F1J1A106A041	10uF 10V	1	
	C7225	F1H1H102B047	1000pF 50V	1	
	C7226	F1H1H102B047	1000pF 50V	1	
	C7230	F1H1H103B047	0.01uF 50V	1	
	C7231	F1H1H104B047	0.1uF 50V	1	
	C7232	F1G1A1040006	0.1uF 10V	1	
	C7233	F1H1H103B047	0.01uF 50V	1	
	C7234	F1H1C104A120	0.1uF 16V	1	
	C7235	F1J1A106A041	10uF 10V	1	
	C7236	F1J1A106A041	10uF 10V	1	
	C7237	F1G1A1040006	0.1uF 10V	1	
	C7238	F1H1C104A120	0.1uF 16V	1	
	C7239	F1J1A106A041	10uF 10V	1	
	C7241	F1H1H102B047	1000pF 50V	1	
	C7243	D0GBR00J0004	0 1/10W	1	
	C7244	F1H1H153B047	0.015uF 50V	1	
	C7253	D0GBR00J0004	0 1/10W	1	
	C7263	F1G1A1040006	0.1uF 10V	1	
	C7264	F1G1A1040006	0.1uF 10V	1	
	C7265	F1G1A1040006	0.1uF 10V	1	
	C7267	F1G1A1040006	0.1uF 10V	1	
	C7268	F1H1H103B047	0.01uF 50V	1	
	C7269	F1H1A105A113	1uF 10V	1	
	C7315	F1H1A154A107	0.15uF 10V	1	
	C7334	F2G1A101A019	100uF 10V	1	
	C7335	F1H1H103B047	0.01uF 50V	1	
	C7338	F1H1H153B047	0.015uF 50V	1	
	C7339	F1H1H182A219	1800pF 50V	1	
	C7341	F1J1A106A041	10uF 10V	1	
	C7352	F1H1H122B047	1200pF 50V	1	
	C7367	F1H1A105A113	1uF 10V	1	
	C7368	F1H1H103B047	0.01uF 50V	1	
	C7501	D0GBR00J0004	0 1/10W	1	
	C7502	F1H1H103B047	0.01uF 50V	1	
	C7601	F1J1A106A041	10uF 10V	1	
	C7613	F1G1A1040006	0.1uF 10V	1	
	C7615	F1J1A106A041	10uF 10V	1	
	C7616	F1J1A106A041	10uF 10V	1	
	C7626	F1J1A106A041	10uF 10V	1	
	C7670	F1H1H103B047	0.01uF 50V	1	
	C7725	F1G1H100A565	10pF 50V	1	
	C7735	F1G1H100A565	10pF 50V	1	
	C7741	F1H1H103B047	0.01uF 50V	1	
	C7752	F1H1H103B047	0.01uF 50V	1	

Safety	Ref. No.	Part No.	Part Name & Description	Qty	Remarks
	C7753	F1J1A106A041	10uF 10V	1	
	C7754	F1J1A106A041	10uF 10V	1	
	C7755	F1J1A106A041	10uF 10V	1	
	C7851	F1H1H103B047	0.01uF 50V	1	
	C7853	F1H1H101A889	100pF 50V	1	
	C11371	F1H1H102B047	1000pF 50V	1	
			SERVICE FIXTURE AND TOOLS		
	SFT1	REE1712	30P FFC (MAIN - CD SERVO)	1	
	SFT2	REX1538	7P WIRE (MAIN - SMPS)	1	

IPSG1301