PSG1103032CE

Service Manual

Compact Stereo System

Model No. SC-HC55EG

Product Color: (K)...Black Type
(W)...White Type

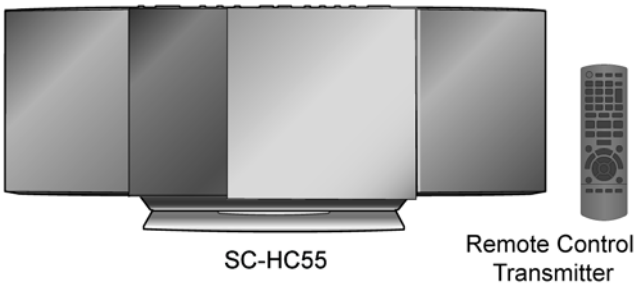

⚠ WARNING

This service information is designed for experienced repair technicians only and is not designed for use by the general public.
It does not contain warnings or cautions to advise non-technical individuals of potential dangers in attempting to service a product.
Products powered by electricity should be serviced or repaired only by experienced professional technicians. Any attempt to service or repair the product or products dealt with in this service information by anyone else could result in serious injury or death.

IMPORTANT SAFETY NOTICE

There are special components used in this equipment which are important for safety. These parts are marked by ⚠ in the Schematic Diagrams, Circuit Board Diagrams, Exploded Views and Replacement Parts List. It is essential that these critical parts should be replaced with manufacturer's specified parts to prevent shock, fire or other hazards. Do not modify the original design without permission of manufacturer.

TABLE OF CONTENTS

PAGE

1 Safety Precautions ---------- 3
- 1.1. General Guidelines ---------- 3
- 1.2. Before Repair and Adjustment ---------- 4
- 1.3. Caution For Fuse Replacement ---------- 4
- 1.4. Protection Circuitry ---------- 4
- 1.5. Safety Part Information ---------- 4

2 Warning ---------- 5
- 2.1. Prevention of Electro Static Discharge (ESD) to Electrostatically Sensitive (ES) Devices ---------- 5
- 2.2. Precaution of Laser Diode ---------- 6
- 2.3. Service caution based on Legal restrictions ---------- 7
- 2.4. Handling Precaution for Traverse Deck ---------- 8

3 Service Navigation ---------- 9
- 3.1. Service Information ---------- 9

PAGE

4 Specifications ---------- 10

5 Location of Controls and Components ---------- 11
- 5.1. Main Unit & Remote Control Key Button Operations ---------- 11
- 5.2. Connections ---------- 12
- 5.3. Disc operations ---------- 13
- 5.4. iPod or iPhone Operation ---------- 15
- 5.5. Bluetooth Operation ---------- 16
- 5.6. USB Operation ---------- 17

6 Self Diagnostic and Doctor Mode Setting ---------- 18
- 6.1. Self Diagnostic Mode ---------- 18
- 6.2. Self Diagnostic Function Error Code ---------- 19
- 6.3. Doctor Mode Table ---------- 20
- 6.4. Sales Demonstration Lock Function Mode ---------- 28

Panasonic®

© Panasonic Corporation 2011. All rights reserved. Unauthorized copying and distribution is a violation of law.

7 Service Fixture & Tools ---------- **29**
8 Disassembly and Assembly Instructions ---------- **30**
8.1. Disassembly flow chart ---------- 31
8.2. Types of Screws ---------- 32
8.3. Main Parts Location Diagram ---------- 32
8.4. Disassembly of Stand Assembly ---------- 33
8.5. Replacement of Door Assembly ---------- 33
8.6. Replacement of Cam Gear ---------- 35
8.7. Disassembly of Lens Cover ---------- 37
8.8. Disassembly of Net Frame Assembly ---------- 38
8.9. Disassembly of Front Panel Block ---------- 40
8.10. Disassembly of Gear Box Assembly ---------- 42
8.11. Disassembly of Remote Sensor P.C.B. & iPod Open Switch P.C.B. ---------- 46
8.12. Disassembly of Interlock Switch P.C.B. ---------- 47
8.13. Replacement of iPod Tub Assembly ---------- 48
8.14. Disassembly of Mini Side Lock ---------- 51
8.15. Disassembly of iPhone P.C.B. ---------- 51
8.16. Disassembly of Top Guide Reel ---------- 53
8.17. Disassembly of Bottom Guide Reel ---------- 54
8.18. Disassembly of Top Ornament Assembly ---------- 56
8.19. Disassembly of Button P.C.B. ---------- 57
8.20. Disassembly of Top Button & Power Light Piece ---------- 58
8.21. Disassembly of Bluetooth P.C.B. ---------- 59
8.22. Disassembly of Panel P.C.B. ---------- 60
8.23. Disassembly of Jack Lid ---------- 61
8.24. Disassembly of Tuner P.C.B. ---------- 62
8.25. Disassembly of CD Mechanism ---------- 63
8.26. Disassembly of CD Servo P.C.B. ---------- 65
8.27. Disassembly of SMPS P.C.B. ---------- 66
8.28. Replacement of Diode (D702) ---------- 69
8.29. Replacement of Transistor (Q701) ---------- 70
8.30. Disassembly of Passive Radiator (SP6) ---------- 72
8.31. Disassembly of Passive Radiator (SP5) ---------- 72
8.32. Disassembly of Front Speaker (SP2) ---------- 73
8.33. Disassembly of Front Speaker (SP1) ---------- 75
8.34. Disassembly of Piezo Unit (SP8) ---------- 76
8.35. Disassembly of Piezo Unit (SP7) ---------- 77
8.36. Disassembly of Passive Radiator (SP4) ---------- 78
8.37. Disass embly of Passive Radiator (SP3) ---------- 79
8.38. Disassembly of Main P.C.B. ---------- 79
9 Service Position ---------- **82**
9.1. Checking & Repairing of Panel P.C.B. ---------- 82
9.2. Checking & Repairing of CD Servo P.C.B. ---------- 83
9.3. Checking & Repairing of Main (Side B) P.C.B. ---------- 85
9.4. Checking & Repairing of Main (Side A) P.C.B. ---------- 89
9.5. Checking & Repairing of SMPS P.C.B. ---------- 92
10 Voltage Measurement & Waveform Chart ---------- **96**
10.1. CD SERVO P.C.B. ---------- 96
10.2. MAIN P.C.B. (1/3) ---------- 97
10.3. MAIN P.C.B. (2/3) ---------- 98
10.4. MAIN P.C.B. (3/3) ---------- 99
10.5. PANEL P.C.B. ---------- 100
10.6. SMPS P.C.B. ---------- 100
10.7. TUNER P.C.B. ---------- 100
10.8. BUTTON P.C.B. ---------- 100
10.9. REMOTE SENSOR P.C.B. ---------- 101
10.10. Waveform Chart ---------- 101
11 Illustration of IC's, Transistors and Diodes ---------- **102**
12 Overall Simplified Block ---------- **103**
12.1. Voltage / Current / Ground Diagram ---------- 103
12.2. Control & Signal Diagram ---------- 104
13 Block Diagram ---------- **105**
13.1. SERVO & SYSTEM CONTROL (1/2) BLOCK DIAGRAM ---------- 105
13.2. SERVO & SYSTEM CONTROL (2/2) BLOCK DIAGRAM ---------- 106
13.3. IC TERMINAL CHART ---------- 107
13.4. BLUETOOTH BLOCK DIAGRAM ---------- 108
13.5. AUDIO BLOCK DIAGRAM ---------- 109
13.6. POWER SUPPLY (1/2) BLOCK DIAGRAM ---------- 110
13.7. POWER SUPPLY (2/2) BLOCK DIAGRAM ---------- 111
14 Wiring Connection Diagram ---------- **112**
15 Schematic Diagram ---------- **113**
15.1. Schematic Diagram Notes ---------- 113
15.2. CD SERVO CIRCUIT (1/2) ---------- 115
15.3. CD SERVO CIRCUIT (2/2) ---------- 116
15.4. MAIN CIRCUIT (1/4) ---------- 117
15.5. MAIN CIRCUIT (2/4) ---------- 118
15.6. MAIN CIRCUIT (3/4) ---------- 119
15.7. MAIN CIRCUIT (4/4) ---------- 120
15.8. MAIN (BLUETOOTH) CIRCUIT ---------- 121
15.9. MAIN (SOUND) CIRCUIT ---------- 122
15.10. MAIN (USB/iPod) CIRCUIT ---------- 123
15.11. iPhone, TUNER & MOTOR CIRCUIT ---------- 124
15.12. REMOTE SENSOR & iPod OPEN SWITCH CIRCUIT ---------- 125
15.13. PANEL, INTERLOCK SWITCH & BUTTON CIRCUIT ---------- 126
15.14. SMPS CIRCUIT ---------- 127
16 Printed Circuit Board ---------- **128**
16.1. CD SERVO P.C.B. ---------- 128
16.2. MAIN P.C.B. (Side A) ---------- 129
16.3. MAIN P.C.B. (Side B) ---------- 130
16.4. iPhone, TUNER, iPod OPEN SWITCH, MOTOR & REMOTE SENSOR P.C.B. ---------- 131
16.5. PANEL, INTERLOCK SWITCH & BUTTON P.C.B. ---------- 132
16.6. SMPS P.C.B. ---------- 133
17 Terminal Function of IC's ---------- **135**
17.1. IC801 (RFKWMHC55M0) MICRO PROCESSOR IC ---------- 135
18 Exploded View and Replacement Parts List ---------- **137**
18.1. Exploded View and Mechanical replacement Parts List ---------- 137
18.2. Electrical Replacement Parts List ---------- 143

1 Safety Precautions

1.1. General Guidelines

1. When servicing, observe the original lead dress. If a short circuit is found, replace all parts which have been overheated or damaged by the short circuit.
2. After servicing, see to it that all the protective devices such as insulation barriers, insulation papers shields are properly installed.
3. After servicing, carry out the following leakage current checks to prevent the customer from being exposed to shock hazards.

1.1.1. Leakage Current Cold Check

1. Unplug the AC cord and connect a jumper between the two prongs on the plug.
2. measure the resistance value, with an ohmmeter between the jumpered AC plug and each exposed metallic cabinet part on the equipment such as screwheads, connectors, control shafts, etc. When the exposed metallic part has a return path to the chassis, the reading should be between 1MΩ and 5.2MΩ. When the exposed metal does not have a return path to the chassis, the reading must be ∞

1.1.2. Leakage Current Hot Check

1. Plug the AC cord directly into the AC outlet. Do not use an isolation transformer for this check.
2. Connect a 1.5kΩ, 10 watts resistor, in parallel with a 0.15μF capacitors, between each exposed metallic part on the set and a good earth ground such as a water pipe, as shown in Figure 1.
3. Use an AC voltmeter, with 1000 ohms/volt or more sensitivity, to measure the potential across the resistor.
4. Check each exposed metallic part, and measure the voltage at each point.
5. Reverse the AC plug in the AC outlet and repeat each of the above measurements.
6. The potential at any point should not exceed 0.75 volts RMS. A leakage current tester (Simpson Model 229 or equivalent) may be used to make the hot checks, leakage current must not exceed 1/2 milliamp. In case a measurement is outside of the limits specified, there is a possibility of a shock hazard, and the equipment should be repaired and rechecked before it is returned to the customer.

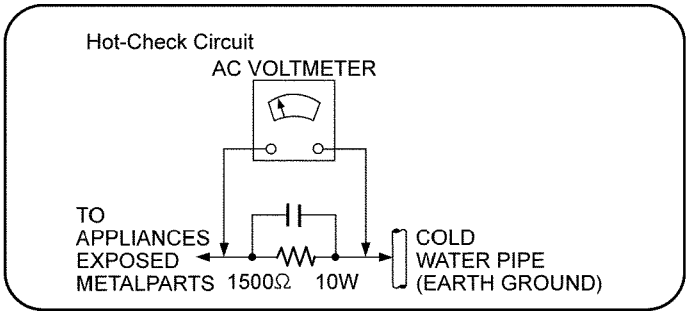

Figure. 1

1.2. Before Repair and Adjustment

Disconnect AC power, discharge unit AC Capacitors as such C702, C710, C725, C727 and C728 through a 10W, 1W resistor to ground.
Caution : DO NOT SHORT-CIRCUIT DIRECTLY (with a screwdriver blade, for instance), as this may destroy solid state devices.
After repairs are completed, restore power gradually using a variac, to avoid overcurrent.

- Current consumption at AC 220 - 240V, at 50Hz in NO SIGNAL mode (at volume min in FM Tuner mode) should be ~200 mA.

1.3. Caution For Fuse Replacement

CAUTION:

Replace with the same type fuse:
(Manufacturer: Skygate Co., Ltd, Type: F751, T3.15A, 250V)

1.4. Protection Circuitry

The protection circuitry may have operated if either of the following conditions are noticed:

- No sound is heard when the power is turned on.
- Sound stops during a performance.

The function of this circuitry is to prevent circuitry damage if, for example, the positive and negative speaker connection wires are "shorted", or if speaker systems with an impedance less than the indicated rated impedance of the amplifier are used.
If this occurs, follow the procedure outlines below:

1. Turn off the power.
2. Determine the cause of the problem and correct it.
3. Turn on the power once again after one minute.

Note:
When the protection circuitry functions, the unit will not operate unless the power is first turned off and then on again.

1.5. Safety Part Information

Safety Parts List:

There are special components used in this equipment which are important for safety.
These parts are marked by ⚠ in the Schematic Diagrams, Exploded View & Replacement Parts List. It is essential that these critical parts should be replaced with manufacturer's specified parts to prevent shock, fire or other hazards. Do not modify the original design without permission of manufacturer.

Table 1

Safety	Ref. No.	Part No.	Part Name & Description	Remarks
⚠	28	RGPX1050J-K1	REAR PANEL	
⚠	300	RAEX1034Z-V	TRAVERSE	
⚠	A2	K2CQ2CA00007	AC CORD	
⚠	A3	RQTX1263-D	O/I BOOK (Ge/It/Sp/Du/Da/Sw)	
⚠	A3	RQTX1264-H	O/I BOOK (Fr)	
⚠	A3	RQTX1265-R	O/I BOOK (En/Po/Cz/Ru/Ur)	
⚠	C702	F0CAF104A105	0.1uF	
⚠	C710	F1BAF2220023	2200pF	
⚠	C725	F0CAF104A105	0.1uF	
⚠	C727	F1BAF1020020	1000pF	
⚠	C728	F1BAF1020020	1000pF	
⚠	F751	K5G312Y00007	FUSE PROTECTOR	
⚠	FP1000	K5H7512A0010	PROTECTOR	
⚠	L702	G0B183E00004	LINE FILTER	
⚠	L703	G0B111H00003	LINE FILTER	
⚠	P751	K2AA2B000011	AC INLET	
⚠	PC701	B3PBA0000503	PHOTO COUPLER	
⚠	PC702	B3PBA0000503	PHOTO COUPLER	
⚠	PCB10	REPX0917A	SMPS P.C.B.	(RTL)
⚠	PCB12	REPX4229D	BLUETOOTH MODULE	
⚠	SW1	D4FB1R250006	RESETTABLE FUSE	
⚠	SW7900	D4FBR5000009	RESETTABLE FUSE	
⚠	T1000	G4D1A0000117	SWITCHING TRANSFORMER	
⚠	T701	ETS28BT11GAC	SWITCHING TRANSFORMER	
⚠	Z752	ERZVA5Z471	ZNR	

2 Warning

2.1. Prevention of Electro Static Discharge (ESD) to Electrostatically Sensitive (ES) Devices

Some semiconductor (solid state) devices can be damaged easily by static electricity. Such components commonly are called Electrostatically Sensitive (ES) Devices. Examples of typical ES devices are integrated circuits and some field-effect transistors and semiconductor “chip” components. The following techniques should be used to help reduce the incidence of component damage caused by electrostatic discharge (ESD).

1. Immediately before handling any semiconductor component or semiconductor-equiped assembly, drain off any ESD on your body by touching a known earth ground. Alternatively, obtain and wear a commercially available discharging ESD wrist strap, which should be removed for potential shock reasons prior to applying power to the unit under test.
2. After removing an electrical assembly equiped with ES devices, place the assembly on a conductive surface such as aluminium foil, to prevent electrostatic charge build up or exposure of the assembly.
3. Use only a grounded-tip soldering iron to solder or unsolder ES devices.
4. Use only an anti-static solder remover device. Some solder removal devices not classified as “anti-static (ESD protected)” can generate electrical charge sufficient to damage ES devices.
5. Do not use freon-propelled chemicals. These can generate electrical charges sufficient to damage ES devices.
6. Do not remove a replacement ES device from its protective package until immediately before you are ready to install it. (Most replacement ES devices are packaged with leads electrically shorted together by conductive foam, aluminium foil or comparable conductive material).
7. Immediately before removing the protective material from the leads of a replacement ES device, touch the protective material to the chassis or circuit assembly into which the device will be installed.

   Caution :

   Be sure no power is applied to the chassis or circuit, and observe all other safety precautions.
8. Minimize bodily motions when handling unpackaged replacement ES devices. (Otherwise harmless motion such as the brushing together of your clothes fabric or the lifting of your foot from a carpeted floor can generate static electricity (ESD) sufficient to damage an ES device).

2.2. Precaution of Laser Diode

CAUTION!
THIS PRODUCT UTILIZES A LASER.
USE OF CONTROLS OR ADJUSTMENTS OR PERFORMANCE OF PROCEDURES OTHER THAN THOSE SPECIFIED HEREIN MAY RESULT IN HAZARDOUS RADIATION EXPOSURE.

Caution:

This product utilizes a laser diode with the unit turned "on", invisible laser radiation is emitted from the pickup lens.
Wavelength: 790 nm (CD)
Maximum output radiation power from pickup: 100 μW/VDE
Laser radiation from the pickup unit is safety level, but be sure the followings:

1. Do not disassemble the pickup unit, since radiation from exposed laser diode is dangerous.
2. Do not adjust the variable resistor on the pickup unit. It was already adjusted.
3. Do not look at the focus lens using optical instruments.
4. Recommend not to look at pickup lens for a long time.

ACHTUNG :

Dieses Produkt enthält eine Laserdiode. Im eingeschalteten Zustand wird unsichtbare Laserstrahlung von der Lasereinheitadg-estrahit.
Wellenlänge : 790nm (CD)
Maximale Strahlungsleistung der Lasereinheit :100 μW/VDE
Die Strahlung an der Lasereinheit ist ungefährlich, wenn folgende Punkte beachtet werden:

1. Die Lasereinheit nicht zerlegen, da die Strahlung an der freigelegten Laserdiode gefährlich ist.
2. Den werkseitig justierten Einstellregler der Lasereinhit nicht verstellen.
3. Nicht mit optischen Instrumenten in die Fokussierlinse blicken.
4. Nicht über längere Zeit in die Fokussierlinse blicken.

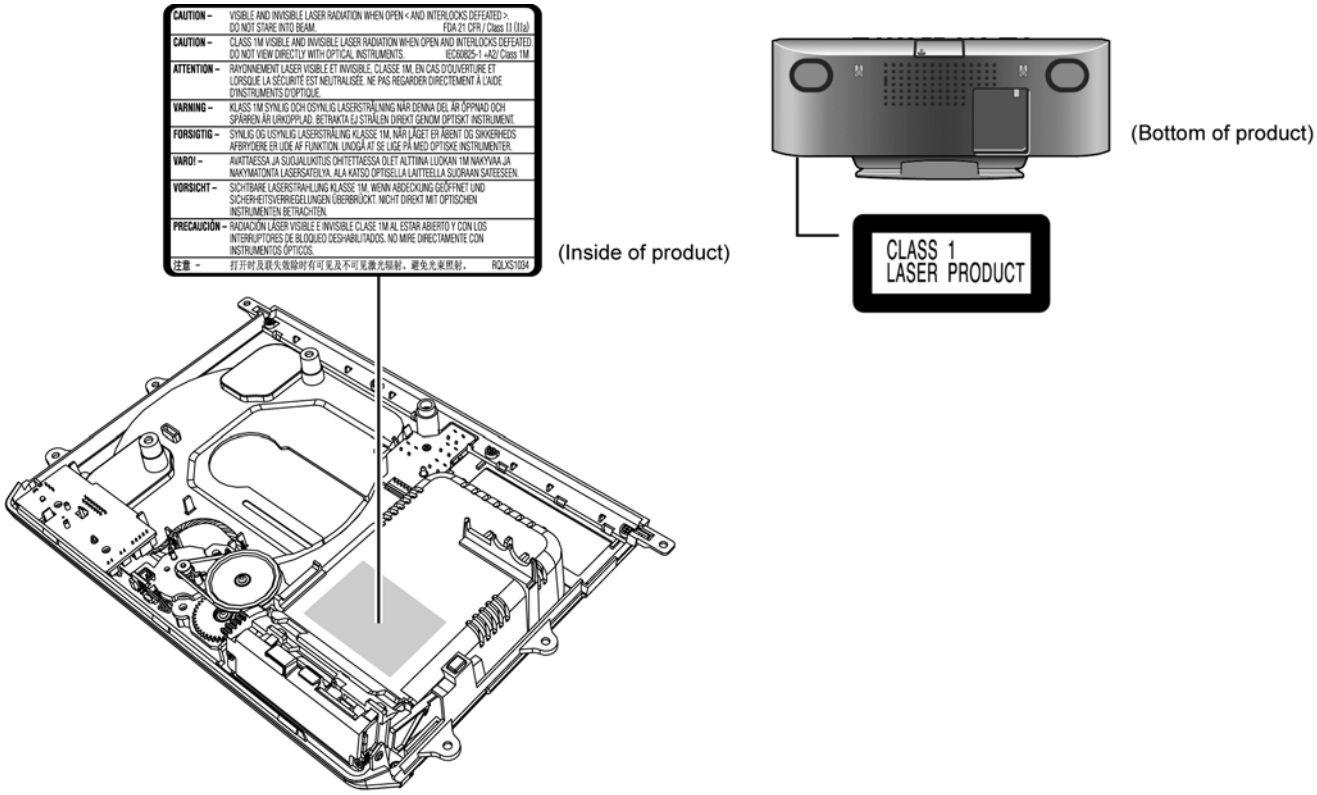

2.3. Service caution based on Legal restrictions

2.3.1. General description about Lead Free Solder (PbF)

The lead free solder has been used in the mounting process of all electrical components on the printed circuit boards used for this equipment in considering the globally environmental conservation.

The normal solder is the alloy of tin (Sn) and lead (Pb). On the other hand, the lead free solder is the alloy mainly consists of tin (Sn), silver (Ag) and Copper (Cu), and the melting point of the lead free solder is higher approx.30 degrees C (86°F) more than that of the normal solder.

Definition of PCB Lead Free Solder being used

The letter of “PbF” is printed either foil side or components side on the PCB using the lead free solder. (See right figure)	PbF

Service caution for repair work using Lead Free Solder (PbF)

- The lead free solder has to be used when repairing the equipment for which the lead free solder is used.
  (Definition: The letter of “PbF” is printed on the PCB using the lead free solder.)
- To put lead free solder, it should be well molten and mixed with the original lead free solder.
- Remove the remaining lead free solder on the PCB cleanly for soldering of the new IC.
- Since the melting point of the lead free solder is higher than that of the normal lead solder, it takes the longer time to melt the lead free solder.
- Use the soldering iron (more than 70W) equipped with the temperature control after setting the temperature at 350±30 degrees C (662±86°F).

Recommended Lead Free Solder (Service Parts Route.)

- The following 3 types of lead free solder are available through the service parts route.
  RFKZ03D01K----------(0.3mm 100g Reel)
  RFKZ06D01K----------(0.6mm 100g Reel)
  RFKZ10D01K----------(1.0mm 100g Reel)

Note

* Ingredient: Tin (Sn), 96.5%, Silver (Ag) 3.0%, Copper (Cu) 0.5%, Cobalt (Co) / Germanium (Ge) 0.1 to 0.3%

2.4. Handling Precaution for Traverse Deck

The laser diode in the optical pickup unit may break down due to static electricity of clothes or human body. Special care must be taken avoid caution to electrostatic breakdown when servicing and handling the laser diode in the traverse deck.

2.4.1. Cautions to Be Taken in Handling the Optical Pickup Unit

The laser diode in the optical pickup unit may be damaged due to electrostatic discharge generating from clothes or human body. Special care must be taken avoid caution to electrostatic discharge damage when servicing the laser diode.

1. Do not give a considerable shock to the optical pickup unit as it has an extremely high-precise structure.
2. To prevent the laser diode from the electrostatic discharge damage, the flexible cable of the optical pickup unit removed should be short-circuited with a short pin or a clip.
3. The flexible cable may be cut off if an excessive force is applied to it. Use caution when handling the flexible cable.
4. The antistatic FPC is connected to the new optical pickup unit. After replacing the optical pickup unit and connecting the flexible cable, cut off the antistatic FPC.

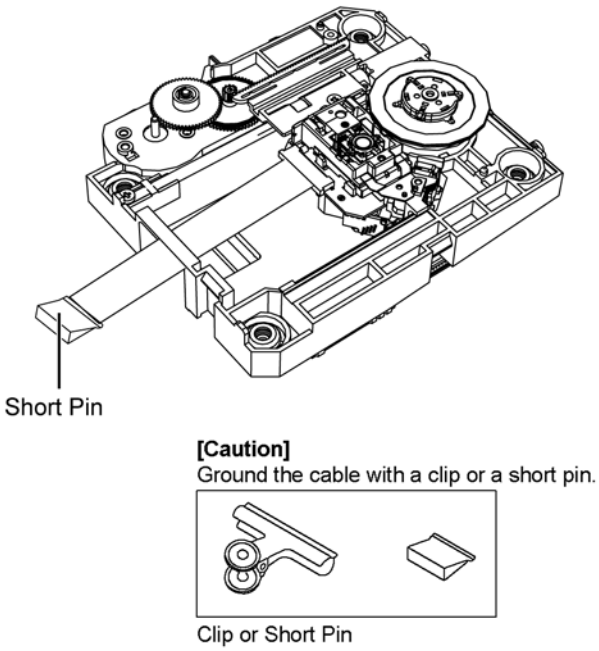

Figure 1

2.4.2. Grounding for electrostatic breakdown prevention

Some devices such as the CD player use the optical pickup (laser diode) and the optical pickup will be damaged by static electricity in the working environment. Proceed servicing works under the working environment where grounding works is completed.

2.4.2.1. Worktable grounding

1. Put a conductive material (sheet) or iron sheet on the area where the optical pickup is placed, and ground the sheet.

2.4.2.2. Human body grounding

1. Use the anti-static wrist strap to discharge the static electricity form your body (Figure 2).

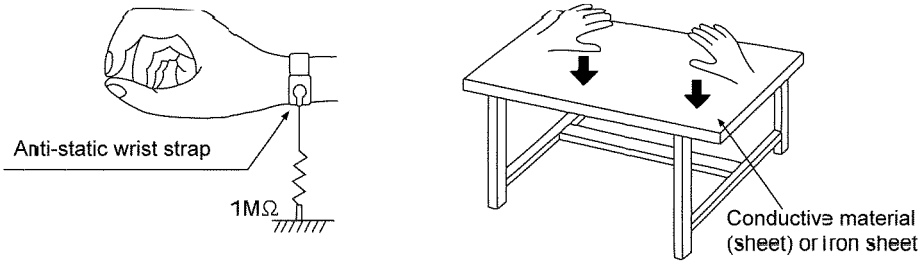

Figure 2

3 Service Navigation

3.1. Service Information

This service manual contains technical information which will allow service personnel's to understand and service this model. Please place orders using the parts list and not the drawing reference numbers.

If the circuit is changed or modified, this information will be followed by supplement service manual to be filed with original service manual.

- **Micro-processor:**

1) The following components are supplied as an assembled part.
   - Micro-processor IC, (IC801) (RFKWMHC55M0)

4 Specifications

■ Amplifier Section	
RMS Output Power Stereo Mode	
Front Ch (both ch driven)	20 W per channel (6 Ω), 1 kHz, 10% THD
Total RMS stereo mode power	40 W
■ Tuner section	
Preset station	FM 30 stations AM 15 stations
Frequency modulation (FM)	
Frequency range	87.50 MHz to 108.00 MHz (50 kHz step)
Antenna terminals	75 Ω (unbalanced)
Amplitude modulation (AM)	
Frequency range	522 kHz to 1629 kHz (9 kHz step) 520 kHz to 1630 kHz (10 kHz step)
■ Disc Section	
Disc played [8 cm or 12 cm]	CD, CD-R/RW (CD-DA, MP3*)
Pick up	
Wavelength	790 nm
Laser power	CLASS 1, CLASS 1M
Audio output (Disc)	
Number of channels	FL, FR, 2 ch
* MPEG-1 Layer 3, MPEG-2 Layer 3	
■ Speaker Section	
Type	2 way, 2 speaker system (Passive Radiator)
Speaker unit(s)	
Woofer	6.5 cm Cone type x 1 per channel
Tweeter	1.5 cm Piezo type x 1 per channel
Passive Radiator	8 cm x 2 per channel
Impedance	6 Ω
■ Bluetooth Section	
Bluetooth system specification	V2.1 + EDR
Wireless equipment classification	Class 2 (2.5 mW)
Supported profiles	A2DP, AVRCP, HFP
Frequency band	2402 MHz to 2480 MHz (Adaptive Frequency Hopping)
Driving distance	10 m Line of Sight (iPhone 4, at height 1 m, in “MODE 1”)
■ Terminal Section	
Phone Jack	
Terminal	Stereo, Ø 3.5 mm jack
Aux (Rear)	
Terminal	Stereo, Ø 3.5 mm jack
USB port	
USB Standard	USB 2.0 full speed
Media file format support	MP3 (*.mp3)
USB device file system	FAT12, FAT16, FAT32
USB port power	Max 500 mA
■ General	
Power consumption	28 W
Power consumption in standby mode: Approx. 0.2 W	
Power supply	AC 220 V to 240 V, 50 Hz
Dimensions (W x H x D)	
With Stand	480 mm x 194 mm x 84 mm
Without stand	480 mm x 194 mm x 69 mm
Mass (weight)	Approx. 2.4 kg
Operating temperature range	0°C to +40°C
Operating humidity range	35% to 80 % RH (no condensation)

- Specifications are subject to change without notice. Mass and dimensions are approximate.
- Total harmonic distortion is measured by the digital spectrum analyzer.

5 Location of Controls and Components

5.1. Main Unit & Remote Control Key Button Operations

Remote control

HC55

❶ **[SLEEP]**
❷ **Standby/on switch [⏻], [⏻/I]**
Press to switch the unit from on to standby mode or vice versa.
In standby mode, the unit is still consuming a small amount of power.
❸ **Numeric buttons [1-9, 0, ≧10]**
To select a 2-digit number
e.g. 16: [≧10] → [1] → [6]
To select a 3-digit number
e.g. 226: [≧10] → [≧10] → [2] →[2] → [6]
❹ **[DEL]**
❺ **[, iPod]**
❻ **[CD]**
❼ **[|◀◀], [▶▶|]**
❽ **[▶/❚❚]**
[ ]
❾ **[◀◀], [▶▶]**
❿ **[SOUND]**
⓫ **[D.BASS]**
⓬ **[PLAY MENU]**
⓭ **[iPod MENU]**
[MENU]
⓮ **[▲, ▼, ◀, ▶], [OK]**
⓯ **[DISPLAY]**
[–DIMMER]
Press and hold to dim the display panel. Press and hold again to cancel.
⓰ **[OPEN/CLOSE SENSOR]**
⓱ **[iPod ⏏, OPEN/CLOSE]**
Sensor activity indicator*
⓲ **[PLAY, ◷]**
⓳ **[CLOCK/TIMER]**
⓴ **[PROGRAM]**
㉑ **[+, VOL ,–]**
[– VOLUME +]
Adjusts sound volume.
㉒ **[MUTE]**
Mutes the sound. Press again to cancel. "MUTE" is also canceled when the volume is adjusted or the unit is turned off.
㉓ **[EXT-IN, RADIO]**
[RADIO/EXT-IN]
㉔ **[■]**
[ ]
㉕ **[PRESET EQ]**
㉖ **[RADIO MENU]**
㉗ **[AUTO OFF]**
This function allows you to turn the unit off (except in radio mode) after the unit is left unused for about 30 minutes.
When the function is turned on, the "A.OFF" indicator light.
㉘ **[AUTO PRESET]**
㉙ **[CD ⏏]**
[CD ⏏, OPEN/CLOSE]
Sensor activity indicator*
㉚ **Standby indicator**
㉛ **Open/Close sensor**
㉜ **Speaker**
㉝ **Display**
㉞ **Sliding door**
㉟ **Microphone**
㊱ **Bluetooth indicator**
㊲ **Remote control signal sensor**
Distance:
Within approx. 7 m (23 ft) directly in front.

* The sensor activity indicator will light when the Open/Close sensor is turned on.
One of the indicators will flash while the sliding door is opening or closing.

Main unit

Buttons such as ❷ function the same as the remote control. They can be used interchangeably.

Top view

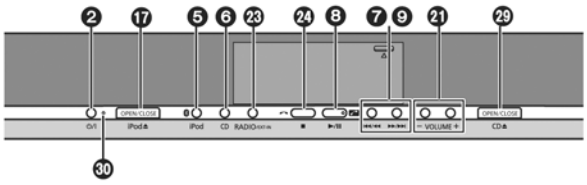

Front view

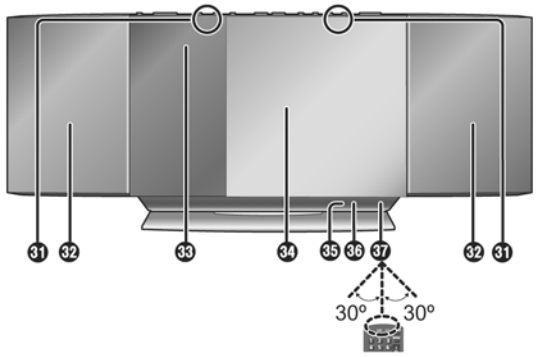

5.2. Connections

■ Notes on speakers

- These speakers do not have magnetic shielding. Do not place them near a television, personal computer or other devices easily influenced by magnetism.

Back View

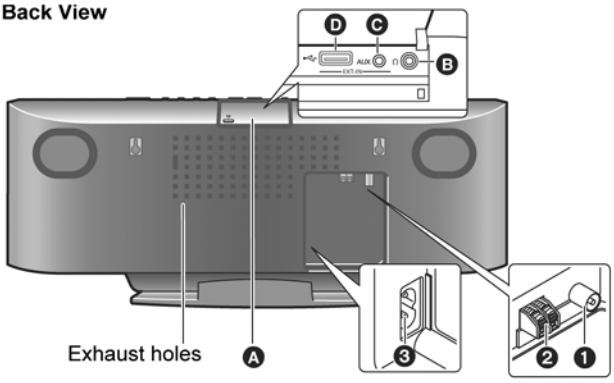

Basic Connections

❶ Connect the FM indoor antenna.

- Tape the antenna to a wall or column, in a position with the least amount of interference.

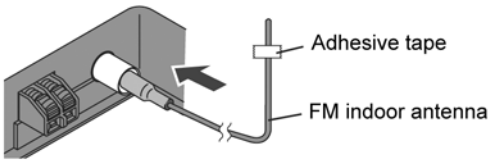

❷ Connect the AM loop antenna.

- Keep the loop antenna cord away from other wires and cords.

Ⓐ Stand the antenna up on its base until it clicks.
Ⓑ AM loop antenna

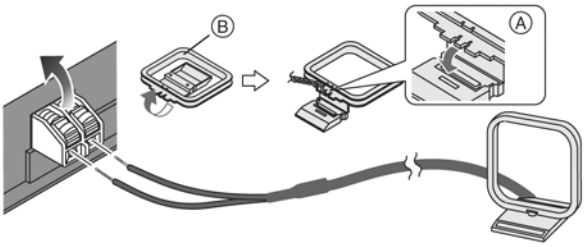

❸ Connect the AC mains lead.

Connect the AC mains lead after all other connections are complete.
Turn the unit on after a few seconds.

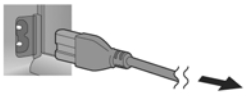

Power consumption in standby mode:
Approx. 0.2 W

To household mains socket

Additional Connections

Open the EXT-IN AUX/Headphone/USB cover to connect headphones, USB devices or external music devices (e.g. MP3 player).

Push the projecting part to open the cover Ⓐ.

Top View

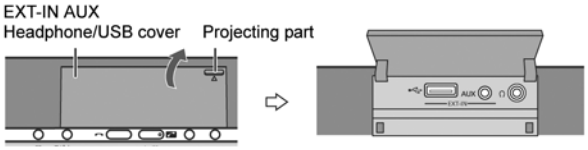

■ Connect the headphones (not supplied)

Reduce the volume level and connect the headphones.
Plug type: ∅3.5 mm stereo Ⓑ

- Listening at full volume for long periods may damage the user's ears.
- To prevent hearing damage, avoid listening for prolonged periods of time. Excessive sound pressure from earphones and headphones can cause hearing loss.

■ Connect an external music device (for AUX mode)

① **Plug the audio cable (not supplied) into the EXT-IN AUX jack Ⓒ.**
Plug type: ∅3.5 mm stereo

② **Press [EXT-IN, RADIO] repeatedly to select "AUX" and start playback on the connected device.**

You can select the sound input level of the external device.

HC55 ① **Press [SOUND] repeatedly to select "INPUT LEVEL".**
② **Press [◄, ►] to select "HIGH" or "NORMAL".**

- Switch the equalizer off or turn the volume of the external device down to reduce the input signal. High level of input signal will distort the sound.
- For details, refer to the instruction manual of the other equipment.
- Cables and devices are not supplied.

■ Connect the USB device (not supplied)

① **Reduce the volume level and plug the USB device Ⓐ into the USB terminal Ⓓ.**
② **Press [EXT-IN, RADIO] repeatedly to select "USB" and start playback.**

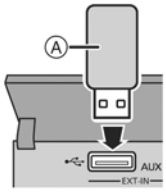

5.3. Disc operations

Opening the sliding door

For disc operations:

Ⓐ While the sliding door is closed, press [CD ⏏] to open the sliding door.

For iPod/iPhone operations:

Ⓑ While the sliding door is closed, press [iPod ⏏] to open the sliding door.

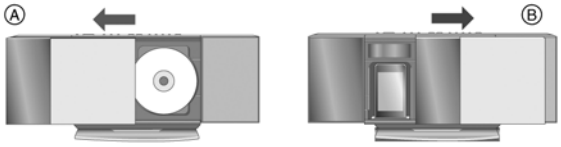

■ Closing the sliding door

Press [CD ⏏] or [iPod ⏏] again.

- Keep fingers away from the sliding door when it is closing to avoid possible minor injuries.

- Damage may occur if the sliding door is forced closed.
- Be careful of CD hitting the sliding door while being removed.
- The sliding door will not close if the docking switch lever is not returned to the original position.

Open/Close sensor

With this function the sliding door can be opened without pressing a button. The sliding door will open or close by moving the palm of your hand over the sensors on the top of the unit.

For disc operations:

Place the palm of your hand over sensor Ⓑ and then move it over sensor Ⓐ.

- To close the sliding door, place the palm of your hand over sensor Ⓐ and then move it over sensor Ⓑ.

For iPod/iPhone operations:

Place the palm of your hand over sensor Ⓐ and then move it over sensor Ⓑ.

- To close the sliding door, place the palm of your hand over sensor Ⓑ and then move it over sensor Ⓐ.

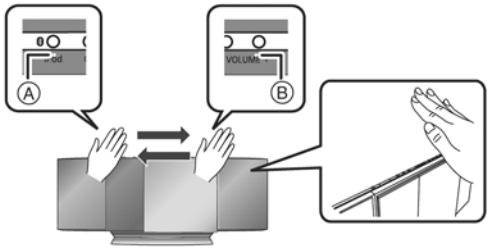

■ To change the setting of the open/close sensor

The sensitivity of the sensor can be changed to increase or decrease the activating area of the open/close sensor.

Press [OPEN/CLOSE SENSOR] repeatedly to select "MODE 1", "MODE 2", "MODE 3" or "OFF SENSOR".

Select the mode that allows correct operation.

- Factory preset: "MODE 2"
- To turn the open/close sensor off, select "OFF SENSOR".

■ To change the sound effect settings of the open/close sensor

① Press [SOUND] repeatedly to select "BUZZER".
② Press [◀] or [▶] to select the following setting.

LOW:	Set the sound effect level to low.
MID:	Set the sound effect level to medium.
HIGH:	Set the sound effect level to high.
OFF:	Turn the sound effect off.

- A red light is lit from the position of the sensor. This is normal.
- The open/close sensor might be unintentionally activated if an object, hand, part of your arm, pets or children move over the top of the unit.
- If the open/close sensor does not react, move the palm of your hand closer to the top of the unit and change the speed that you move your hand.
- If the open/close sensor does not work, try changing the sensor's setting. If it still does not work, open/close the sliding door using the buttons on the unit or the remote control.
- When the sensor setting is changed to "MODE 1", move your hand closer (approx. 3 cm) over the unit.
- The disc operation side of the sliding door will not open during CD playback or pause.

Inserting a disc

1 Press [⏻] to turn the unit on.

2 Open the sliding door. (⇨ left)

3 With the label of the disc facing towards you, tilt the disc into the disc tray under the sliding door.

4 Place the disc onto the spindle in the centre and then push the disc down until it clicks into place.

- Make sure that the unit does not fall when inserting the disc.

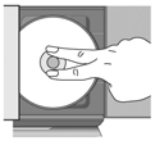

5 Close the sliding door. (⇨ left)

■ Removing a disc

① Open the sliding door.
② Hold the centre and the top right of the disc and pull the top right of the disc to unlock it from the spindle.
③ Tilt the disc so as not to touch the sliding door or the lens and remove the disc.

Basic play

1 Press [⏻] to turn the unit on.
2 Insert the disc to be played.
3 Press [CD].
4 Press [▶/❚❚] to start play.

Stop	Press [■].
Pause	Press [▶/❚❚]. Press again to resume play.
Skip	Press [|◀◀] or [▶▶|] to skip track. Press [▲, ▼] to skip album. (MP3)
Search CD	Press and hold [◀◀] or [▶▶].
Direct access play (Play starts from the track you selected.)	CD: Press the numeric buttons to select the track. MP3: ① Press [▲, ▼] to select the album. ② Press [▶▶|] once and then the numeric buttons to select the track. ● This function does not work during random play or program play.
View contents information	Press [DISPLAY] repeatedly during play or pause. The current track's information, etc. is displayed. ● Maximum number of displayable characters: approximately 30 ● This unit supports ver. 1.0, 1.1 and 2.3 ID3 tags. Text data that is not supported will not be displayed or shown differently.

5.3.1. Notes on CD-R and CD-RW

■ Notes on CD-R/CD-RW

- This unit can play CD-R and CD-RW recorded with CD-DA or MP3.
- Use an audio recording disc for CD-DA and finalize* it when you finish recording.
  * A process performed after recording that enables CD-R or CD-RW players to play audio CD-R and CD-RW.
- The unit may not be able to play some discs due to the condition of the recording.
- Do not use irregularly shaped CDs.
- Do not attach extra labels and stickers.
- Do not use CDs with labels and stickers that are coming off or with excessive adhesive under the labels and stickers.
- Do not attach scratch-proof covers or any other kind of accessories.
- Do not write anything on the CDs.
- Do not clean CDs with liquids (Wipe with a soft and dried cloth).

Note about using a DualDisc

- The digital audio content side of a DualDisc does not meet the technical specifications of the Compact Disc Digital Audio (CD-DA) format so play may not be possible.
- Do not use a DualDisc in this unit as it may not be possible to insert it correctly and it may get scratched or scraped.

Creating MP3 files playable on this unit

- Maximum number of tracks and albums: 999 tracks and 254 albums (Excluding Root folder).
- Compatible compression rate: Between 64 kbps and 320 kbps (stereo). 128 kbps (stereo) is recommended.
- Disc formats: ISO9660 level 1 and level 2 (except for extended formats).
- The time for reading TOC depends on the number of the tracks, folders or folder structures.

Limitations on MP3

- This unit is compatible with multi-sessions and it takes more time to start playing.
- This unit cannot play files recorded using packet write.
- If the disc includes both MP3 and normal audio data (CD-DA), the unit plays the type recorded in the inner part of the disc. If the disc includes both MP3 and other types of audio data (e.g. WMA or WAV), the unit plays only the MP3.
- Depending on how you create the MP3 files, they may not play in the order you numbered them or may not play at all.

5.4. iPod or iPhone Operation

Inserting/Removing an iPod/ iPhone

■ **Inserting an iPod/iPhone**

1 Open the sliding door.

2 Insert the suitable dock adapter (not supplied) for the iPod/iPhone.

- Insert the side of the iPod/iPhone dock adapter with the clips facing towards you first and then push the opposite side until it clicks into place.

Ⓐ Clips
Ⓑ Dock adapter
Ⓒ iPod/iPhone docking switch lever
Ⓓ Connector

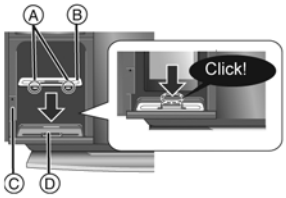

3 Press [⏏] to unlock the iPod/iPhone dock and then pull the docking switch lever to tilt the iPod/iPhone dock.

4 Connect the iPod/iPhone (not supplied) firmly.

- Be sure to remove the iPod/iPhone from its case.

5 Push the docking switch lever back until it clicks into place.

6 Close the sliding door.

■ **Removing an iPod/iPhone**

① Repeat step 1 and 3.
② To remove, simply pull the iPod/iPhone straight out.
③ Repeat step 5 and 6.

- If the iPod/iPhone dock is not tilted when connecting or disconnecting the iPod/iPhone, it may cause damage to the connector.
- Be sure to use a dock adapter that is compatible with your iPod/iPhone. To purchase a dock adapter, consult your iPod/iPhone dealer.
- Reduce the volume of the main unit to minimum before connecting or disconnecting the iPod/iPhone.

iPod operations

Preparation
Press [iPod] repeatedly to select "IPOD".

Play	Press [▶/❚❚].
Pause	Press [▶/❚❚] or [■]. Press again to resume play.
Skip track	Press [|◀◀] or [▶▶|].
Search the current track	Press and hold [◀◀] or [▶▶].
Display iPod/iPhone menu/return to previous menu	Press [iPod MENU] in the play mode. (Remote control only)
Select contents from iPod/iPhone menu	Press [▲, ▼] and then [OK]. (Remote control only)

- The operations may vary or not work depending on the iPod/iPhone models.

Notes on iPhone:

- All phone features can only be controlled by the iPhone's touch screen.
- The unit does not display incoming calls or the phone status (Connect iPhone to this unit via Bluetooth to enjoy extended capabilities).
- The ringtone of incoming call can be heard from the iPhone's speaker. When the unit is in iPod/iPhone mode, the ringtone can also be heard from the unit's speakers (Connect iPhone to this unit via Bluetooth to enjoy extended capabilities).
- Connecting or disconnecting the iPhone from the unit will not cancel a call.
- There is no Apple Inc. specification that will guarantee the iPhone responses above. iPhone responses may vary on new iPhone models or iPhone new software updates.

■ **Charging the iPod/iPhone**

- When iPod/iPhone is being charged in standby mode, "IPOD CHARGING" is shown on the main unit's display.
- Check iPod/iPhone to see if the battery is fully charged. If you are not using iPod/iPhone for an extended period of time after recharging has completed, disconnect it from the main unit as the battery will be depleted naturally. (Once fully recharged, additional recharging will not occur.)

Compatibility iPod/iPhone

• For compatibility of iPod/iPhone please refer to Operating Instructions

5.5. Bluetooth Operation

About using Bluetooth®

What is Bluetooth®?
Bluetooth® technology allows you to make a wireless connection with another electronic device.

■ Frequency band used

This unit uses the 2.4 GHz frequency band, however other devices may use this frequency as well. To avoid interference with other wireless devices, please follow the cautions listed below.

■ Certification of this device

This unit conforms to frequency restrictions and has received certification based on frequency laws, so a wireless permit is not necessary.
However, the following action is punishable by law in some countries:

- Taking apart/modifying the unit.

■ Usage restrictions

- Wireless transmission and/or usage with all Bluetooth® equipped devices is not guaranteed.
- Compatible mobile phones capable of wireless transmission include and comply to standards set by the Bluetooth SIG, Inc. However, if the mobile phone is optimized to meet standard specifications, some functions may work. Even so, depending on the specifications and settings of the mobile phone, a connection may not be established, nor are the methods of operation, display, or operation guaranteed.
- This unit supports Bluetooth® security features, however depending on the operating environment and/or settings, this security may not be sufficient. Use caution when transmitting data wirelessly.
- Please be aware that Panasonic accepts no responsibility for data and/or information that may be compromised during a wireless transmission.

■ Range of use

Use this device within an unobstructed 10 m range. The range of usage or perimeter may be shortened depending on any obstructions, devices causing interference, other people in the room, or the construction of the building. Please note that the range mentioned above is not guaranteed.

■ Effects from other devices

- It is possible that this unit may not operate correctly or you may experience other effects of instability such as “broken up” audio, etc. when other devices are placed within close proximity. Therefore, in order to prevent signal interference, we recommend separating this unit from the following devices during use:

Microwave oven/Wireless LAN/Electronic devices/Audio & Video devices/Office Assistant machines & devices/Digital cordless phones/Fax machines, etc.

- If you live in close proximity to a broadcasting studio and the signal is too strong, the unit may not operate correctly.
- When using a notebook PC with a wireless LAN transmitter, do not use this unit and the wireless LAN at the same time.
- If you are still experiencing noise even outside of the 5 m range of a wireless LAN device, turn the wireless LAN device off.

■ Intended usage limitations

This unit is intended for normal, general use. This unit is not developed or manufactured with the intention of use in “high safety”* or hazardous occupations. Do not use this unit in these kinds of environments or occupations.

* The following examples require extreme caution, and can directly result in loss of life, or extreme bodily harm.

e.g.) Nuclear Engineering, and control of a nuclear reaction/ automated control of aircraft/air traffic control management/ controlling movement of heavy freight systems/control of life support or extension systems/control of weapons systems and/or missile launch systems, etc.

Bluetooth® pairing

Preparation
Pair the Bluetooth® device with this unit to create an audio connection.

1 Press [ᛒ, iPod] repeatedly to select “BLUETOOTH”.
When using it for the first time, it enters pairing mode automatically.

2 While this unit is in pairing mode, access the Bluetooth® menu of the Bluetooth® device and execute a Bluetooth® search to find this unit (SC-HC55).

- Please refer to the Bluetooth® device user manual for further instruction on how to connect a Bluetooth® device.
- If prompted for the passkey, enter “0000”.

3 If pairing is successful, the paired device’s name will be displayed for 2 seconds. The Bluetooth® indicator lights up. The unit is now ready to be used with the Bluetooth® device.

- Make sure the Bluetooth® device supports A2DP (Advance Audio Distribution Profile).
- This unit supports the A2DP reception which is copyright-protected by SCMS-T method.
- A2DP enables you to stream stereo sound from an audio source (mobile phone, PC or laptop) to this unit via Bluetooth®.
- Depending on the specification or setting of mobile phones, connection may not be established, or operation and display may vary.
- You can register up to 6 devices into this unit. Disconnect the current Bluetooth® device and refer to “To register more devices”.
- If you register more than the maximum device number, the oldest device in connection history will be overwritten.
- If a registered device is re-registered, it will be overwritten.

Basic play

Pair the Bluetooth® device with this unit to create an audio connection.

1 Press [ᛒ, iPod] repeatedly to select “BLUETOOTH”.

2 On the Bluetooth® device:
Select this unit (SC-HC55) on the Bluetooth® setup screen to make the connection.

3 On the Bluetooth® device:
Start playback of a music source.

- If the device is connected, the music will be heard on this unit.
- The Bluetooth® indicator lights when there is a connection.
- Please refer to the Bluetooth® device user manual if required.

4 You can also make the following controls with the remote control.

Play	Press [▶/❚❚] to start play.
Stop	Press [■].
Pause	Press [▶/❚❚]. Press again to resume play.
Skip track	Press [|◀◀] or [▶▶|].
Display information	Press [DISPLAY] repeatedly.

5.6. USB Operation

The USB connectivity enables you to connect and play MP3 tracks from a USB device.

Preparation:

- Before connecting any USB device to this unit, be sure to back up the data.
- It is not recommended to use a USB extension cable. The device connected via the cable will not be recognized by this unit.

1 Plug the USB device into the unit.

2 Press [EXT-IN, RADIO] repeatedly to select "USB".

3 Press [▶/❚❚] to start play.

Stop	Press [■]. ● The position is memorized while "RESUME" is displayed. Press [▶/❚❚] to resume play. Press [■] again to clear the position.
Pause	Press [▶/❚❚]. ● Press [▶/❚❚] again to restart play.
Skip	Press [❙◀◀] or [▶▶❙]. (Track) Press [▲, ▼]. (Album)
Direct access play (Play starts with the track you select.)	① Press [▲, ▼] to select the album. ② Press [▶▶❙] once and then the numeric buttons to select the track.

- **Before removing the USB device, select a source other than "USB".**

- Removing the USB device while it is selected can damage the data stored in the device.

For other operating functions, they are similar as those described in "Disc operations".

6 Self Diagnostic and Doctor Mode Setting

This unit is equipped with features of self diagnostic & doctor mode setting for checking the functions & reliability.

6.1. Self Diagnostic Mode

Here is the procedures to enter into Self Diagnostic Mode.
Step 1 : Turn on the unit.
Step 2 : Select CD mode.
Step 3 : Press and hold [■] button for 2 seconds follow by [▶▶/▶▶|] on the unit.
Step 4 : The display show as follow.

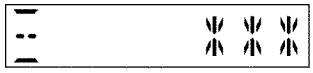

: Error code

To exit the Self Diagnostic Mode

Use either one of the following methods to cancel the Self Diagnostic Mode.

- Press the power button on the main unit or using the remote control.
- Unplug the AC cord.

6.1.1. Self Diagnostic Table

Item		FL display	Key operation
Mode name	**Description**		
Self Diagnostic Mode	To enter into self diagnostic checking	--	Step 1 : Select CD mode (Ensure no disc is inserted). Step 2 : Press and hold [■] follow by [▶▶/▶▶|] on main unit for 2 second .
Error code information	System will perform a check on any unusual/error code from the memory	Example: -- F26	Step 1 : In self diagnostic mode, Press [STOP] on main unit. To exit, press [⏻/I] on main unit or remote control.
Delete Error code	To clear the stored in memory (EEPROM IC)	CLEAR	Step 1 : In self diagnostic mode, Press [0] on remote control. To exit, press [⏻/I] on main unit or remote control.

6.2. Self Diagnostic Function Error Code

6.2.1. CD Mechanism Error Code Table

Error Code	Diagnostic Contents	Descriptionof error	Automatic FL Display	Remarks
CD H15	CD Open Abnormal	During operation POS_SW_R On fail to be detected with 4 sec. Error No. shall be clear by force or during cold start.	CD H15	Press [■] on main unit for next error.
CD H16	CD Closing Abnormal	During operation POS_SW_CEN On fail to be detected with 4 sec. Error No. shall be clear by force or during cold start.	CD H16	Press [■] on main unit for next error.
F26	Communication between CD servo LSI and micro-p abnormal.	During switch to CD function, if SENSE = “L” within failsafe time of 20ms.	F26	Press [■] on main unit for next error.

6.2.2. Power Amp Error Code Table

Error Code	Diagnostic Contents	Descriptionof error	Automatic FL Display	Remarks
F61/F76	Power Amp IC output abnormal	During power-on, PDET1, PDET2 & MAINV_DET / TEMP_DET is “L” after 1 sec.	F61 F76	Press [■] on main unit for next error.

6.2.3. iPod Error Code Table

Error Code	Diagnostic Contents	Descriptionof error	Automatic FL Display	Remarks
IPD H15	iPod Open Abnormal	During operation POS_SW_L On fail to be detected with 3 sec. Error No. shall be clear by force or during cold start.	IPD H15	Press [■] on main unit for next error.
IPD H16	iPod Closing Abnormal	During operation POS_SW_CEN On fail to be detected with 3 sec. Error No. shall be clear by force or during cold start.	IPD H16	Press [■] on main unit for next error.

6.3. Doctor Mode Table

Here is the procedures to enter into Doctor Mode.
Step 1 : Turn on the unit.
Step 2 : Select CD mode.
Step 3 : Pressing and hold [■] on main unit then press [4] follow by [7] using the remote control.
Step 4 : The display show as follow.

To exit the Doctor mode

Use either one of the following methods to cancel the Doctor mode.

- Press the power button of the unit or using the remote control.
- Unplug the AC cord.

6.3.1. Doctor Mode Table 1

Item		FL Display	Key Operation
Mode Name	**Description**		**Front Key**
Doctor Mode	To enter into Doctor Mode for checking of various items and displaying EEPROM and firmware version. Note: The micro-processor version as shown is an example. It will be revise when there is an updates. FL Display sequence Display 1 → 2	(Display 1) Version Display (DEC) Check sum (HEX) Checksum : (Condition 1) Version Display (DEC) No Rom correction When EEPROM is not detected, it shall display only firmware version Checksum : (Condition 2) ROM=0042 When EEPROM is detected the version of the EEPROM does not match or not working properly [NG] is display. Checksum : (Condition 3) When EEPROM is detected, it shall display the [YYYY]. (Display 2) NO DISC The Checksum of EEPROM and firmware version will be display for 2 sec.	In any mode: Press [■] button on main unit follow by [4] & then [7] on remote control. To exit Doctor Mode, press [⏻/I] button on main unit or remote control.

6.3.2. Doctor Mode Table 2

Item		FL Display	Key Operation
Mode Name	**Description**		**Front Key**
FL Display Test	To check the FL segments display (All segments will light up)		In Doctor Mode: Press [1] button on remote control. To cancel, press [0] button on remote control. It returns Doctor Mode. To exit Doctor Mode, press [⏻/I] button on main unit or remote control.
Volume Setting	To check for preset volume setting Note : In tuner mode this function is not possible	VOL 50	In Doctor Mode: Press [7] button on remote control. To cancel, press [0] button on remote control. It returns Doctor Mode. To exit Doctor Mode, press [⏻/I] button on main unit or remote control.
		VOL 35	In Doctor Mode: Press [8] button on remote control. To cancel, press [0] button on remote control. It returns Doctor Mode. To exit Doctor Mode, press [⏻/I] button on main unit or remote control.
		VOL 0	In Doctor Mode: Press [9] button on remote control. To cancel, press [0] button on remote control. It returns Doctor Mode. To exit Doctor Mode, press [⏻/I] button on main unit or remote control.
Mecha Sliding Panel Reliability	To check the operation of sliding Panel. Sequence as follow : 1. CD Door set to CLOSE position. 2. CD Door move to the left (CD Open direction) and stop at LEFT position for 1 sec. 3. CD Door move to the right (CD Close direction) and stop at CLOSE position for 1 sec. 4. All the process above is considered as 1 cycle. Step (2) ~ (3) will repeat; Cycle Counter display increase every 1 cycle completed. Refer to 6.3.5 for more information	000000 ↓ 635535	In Doctor Mode: Press [≥10] follow by [2] & then [1] button on remote control. To cancel, press [0] button on remote control. It returns Doctor Mode. To exit Doctor Mode, press [⏻/I] button on main unit or remote control.
CD Traverse Test Mode	To check for the traverse unit operation. In this mode, the first & last track is access & read. (TOC). It fails when TOC is not completed by 10s or the traverse is out of focus. for more than 2s Refer to 6.3.6 for more information	00000001 The counter will increment by 1 until reach 99999999 ↓ 99999999	In Doctor Mode: Press [≥10] follow by [1] & then [2] button on remote control. To cancel, press [0] button on remote control. It returns Doctor Mode. To exit Doctor Mode, press [⏻/I] button on main unit or remote control.

6.3.3. Doctor Mode Table 3

Item		FL Display	Key Operation
Mode Name	**Description**		**Front Key**
CD Self-Adjusment Display	To display result of self adjustment for CD.	E-0E The [NO DISC] display will appear after 3s, NO DISC	In Doctor Mode: Press [≥10] follow by [1] & then [4] button on remote control. To cancel, press [0] button on remote control. It returns Doctor Mode. To exit Doctor Mode, press [⏻/I] button on main unit or remote control.
CD Combination Test	To check the open/close operation & inner outer disc access operation. 1. It fails when CD open/close is not completed by 4s. 2. The disc access fails in 10s. 3. The traverse is out of focus for more than 2s. Refer to 6.3.7 for more information	00000001	In Doctor Mode: Press [≥10] follow by [1] & then [5] button on remote control. To cancel, press [0] button on remote control. It returns Doctor Mode. To exit Doctor Mode, press [⏻/I] button on main unit or remote control.
Cold Start	To activate cold start upon next power up. (Backup data are initialized)	-- -- -- -- -- -- -- -- The [NO DISC] display will appear after 3s, NO DISC	In Doctor Mode: Press [SLEEP] button on remote control. To cancel, press [0] button on remote control. It returns Doctor Mode. To exit Doctor Mode, press [⏻/I] button on main unit or remote control.
EEPROM Checksum	To check sum of EEPROM for a simplifield ROM correction. 1. When EEPROM is not detected, the only micro-p's version shall be displayed without an EEPROM's check sum	EXX-YYYY Version Display (DEC) Check sum (HEX) EEPROM not detected only firmware is display EXX-	In any mode: Press [■] button on main unit follow by [4] & then [7] on remote control. To cancel, press [0] button on remote control. It returns Doctor Mode. To exit Doctor Mode, press [⏻/I] button on main unit or remote control.
Auto Power down Detect (APD) Test	To check for the auto power down operation	APD- Condition 1 (when APD is OK) APD- OK Condition 2 (when APD is abnormal operation) APD- NG	In Doctor Mode: Press [≥10] follow by [2] & then [2] button on remote control. To cancel, press [0] button on remote control. It returns Doctor Mode. To exit Doctor Mode, press [⏻/I] button on main unit or remote control.

6.3.4. Doctor Mode Table 4

Item		FL Display	Key Operation
Mode Name	**Description**		**Front Key**
Region Setting Check	To check Region setting of unit. Refer to 6.3.8 for the Region Setting destination	Region Setting destination	In Doctor Mode: Press [≥10] follow by [1] & then [6] button on remote control. To cancel, press [0] button on remote control. It returns Doctor Mode. To exit Doctor Mode, press [⏻/I] button on main unit or remote control.
CD LSI Version No Check	To check CD LSI Version No. & checksum correction	Version (decimal) Checksum (hex)	In Doctor Mode: Press [4] button on remote control. To cancel, press [0] button on remote control. It returns Doctor Mode. To exit Doctor Mode, press [⏻/I] button on main unit or remote control.
Bluetooth Version No. Check	To check Bluetooth Firmware Version.	Firmware Version No (0001~9999)	In Doctor Mode: Press [5] button on remote control. To cancel, press [0] button on remote control. It returns Doctor Mode. To exit Doctor Mode, press [⏻/I] button on main unit or remote control.
DSP IC Version Check	To check DSP Firmware mode & Version No.	Firmware Version No (00~FF) Firmware Mode (00~FF)	In Doctor Mode: Press [6] button on remote control. To cancel, press [0] button on remote control. It returns Doctor Mode. To exit Doctor Mode, press [⏻/I] button on main unit or remote control.
Motion Sensor Check	To check Motion Sensor Operation. Refer to 6.3.9 for more information	L : Left side sensor xx : “OK” or “NG” yyy : 0 ~ 255 yyy = Min 8, Max 18	In Doctor Mode: Press [SENSOR] key to enter “Motion Sensor” test mode. Press [SENSOR] key, IR LED located at left side, reading measurement of PS Irradiance value set display as show. To cancel, press [0] button on remote control. It returns Doctor Mode. To exit Doctor Mode, press [⏻/I] button on main unit or remote control.
		R : Right side sensor xx : “OK” or “NG” yyy : 0 ~ 255 yyy = Min 8, Max 18	In Doctor Mode: Press [SENSOR] key to enter “Motion Sensor” test mode. Press [SENSOR] key, IR LED located at Right side, reading measurement of PS Irradiance value set display as show. To cancel, press [0] button on remote control. It returns Doctor Mode. To exit Doctor Mode, press [⏻/I] button on main unit or remote control.
MN947 Model setting	To check Model Setting. Refer to 6.3.10 for the Model Setting	Model Setting	In Doctor Mode: Press [≥10] follow by [1] & then [8] button on remote control. To cancel, press [0] button on remote control. It returns Doctor Mode. To exit Doctor Mode, press [⏻/I] button on main unit or remote control.

6.3.5. Mecha Sliding Panel Reliability

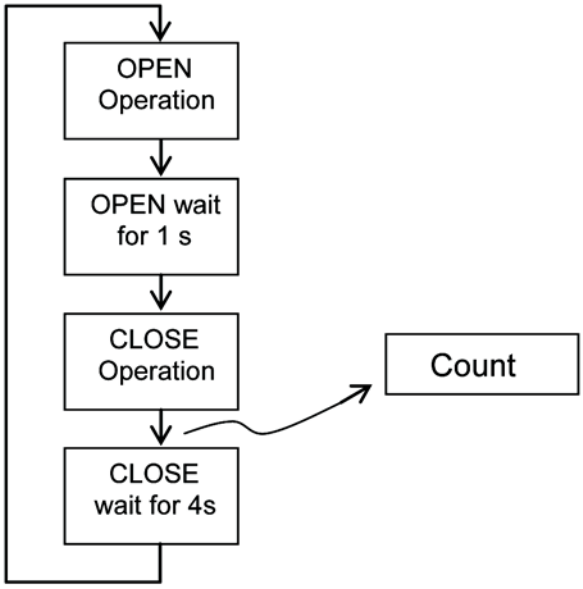

6.3.6. CD Traverse Test (For CD)

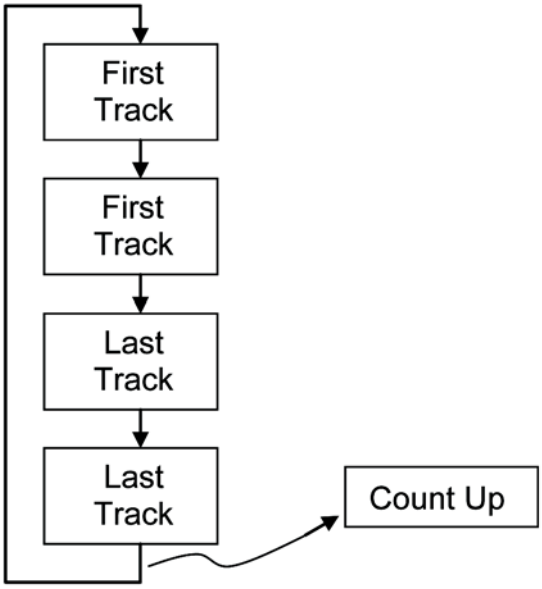

6.3.7. CD Reliability Test (For CD)

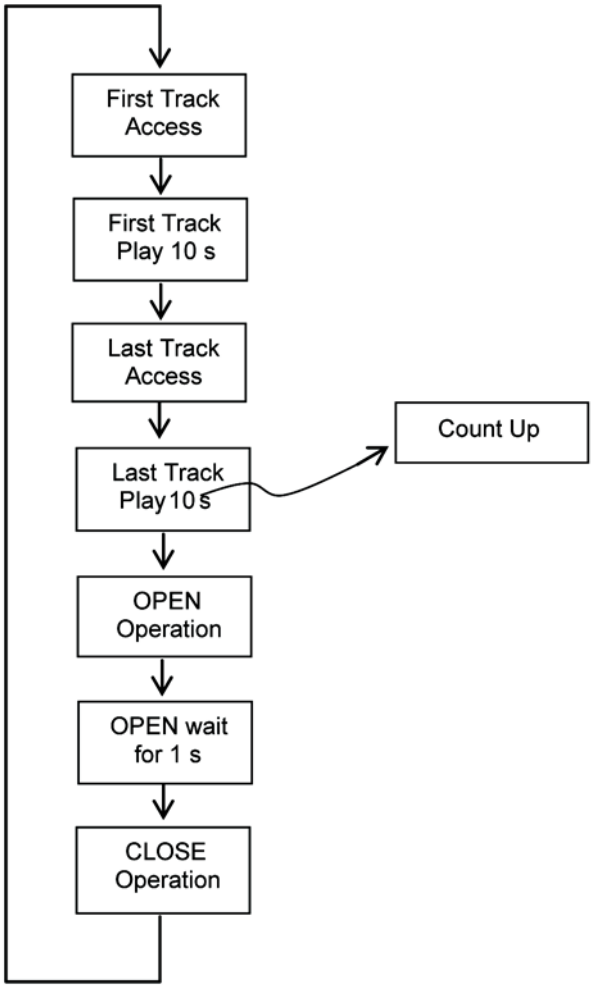

6.3.8. Region Check Table (For Tuner)

Region	Model	Series	Country
1	HC55	P/PC	North America
2	HC55	Japan	Japan
3	HC55	EP	E. Europe
4	HC55	EB/EG/EF	UK, Germany, France
5	HC55	DBEB	UK
6	HC55	GA/GT/GK/GS	S.E. Asia
7	HC55	GN	Oceania
8	HC55	DBGN	Oceania

6.3.9. Motion Sensor Check

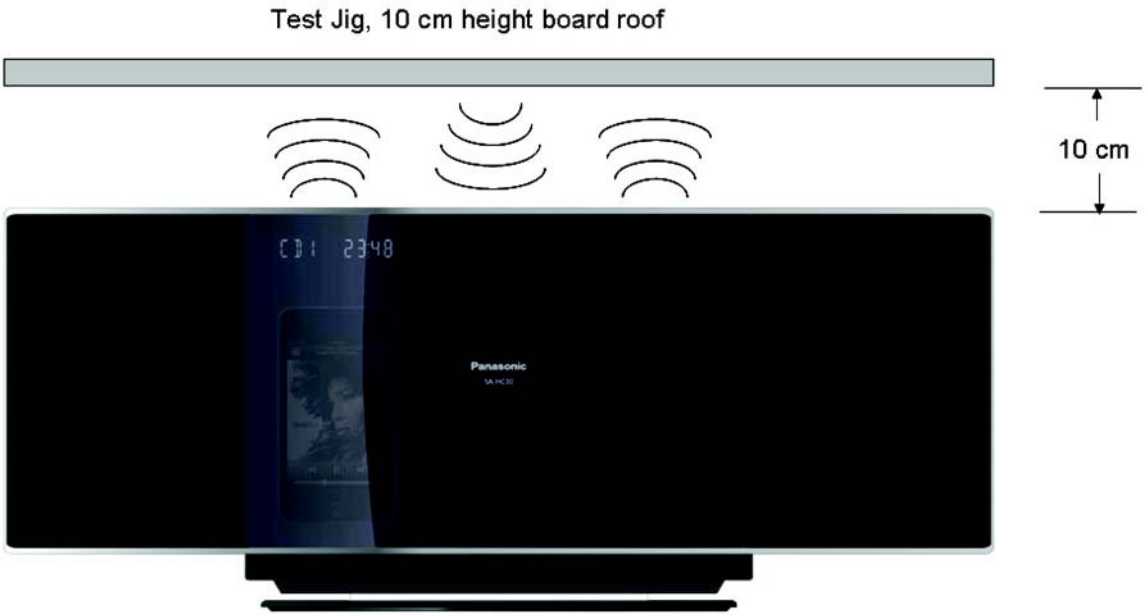

6.3.10. Model setting

Region No.	Function		Model
	With iPod	With Shock Proof	
S0	O	O	HC55

6.4. Sales Demonstration Lock Function Mode

6.4.1. Entering into sales Demo Mode

Here is the procedures to enter into Sales Demonstration Lock.

Step 1 : Turn on the unit.

Step 2 : Select to any mode function, press and hold [CD⏏(OPEN/CLOSE)] key and follow by [CD►/II] key. It must be pressed within 0.5 sec.

Step 3 : The display will show upon entering into this mode.

Note : CD⏏(OPEN/CLOSE) button is invalid and the main unit displays “LOCKED” while the lock function mode is entered.

6.4.2. Cancellation

Step 1 : To cancel only can be triggered in CD Mode and Volume 19.

Step 2 : Press and hold [CD⏏(OPEN/CLOSE)] key and follow by [CD►/II] key. It must be pressed within 0.5 sec.

Step 3 : The display will show after exit from this mode.

7 Service Fixture & Tools

Prepare service tools before process service position.

Ref. No.	Service Tools		Remarks
SFT1	Main P.C.B. (CN7002) - CD Servo P.C.B. (CN7002)	RFKZHC55K1 (27P FFC)	
SFT2	Main P.C.B. (CN303) - Remote Sensor P.C.B. (CN300)	RFKZHC55K2 (15P FFC)	
SFT3	Main P.C.B. (CN7902) - CD Servo P.C.B. (CN7901)	RFKZHC35 (Extension P.C.B.)	

8 Disassembly and Assembly Instructions

Caution Note:

- **This section describes the disassembly and/or assembly procedures for all major printed circuit boards & main components for the unit. (You may refer to the section of “Main components and P.C.B Locations” as described in the service manual)**
- **Before carrying out the disassembly process, please ensure all the safety precautions & procedures are followed.**
- **During the disassembly and/or assembly process, please handle with care as there may be chassis components with sharp edges.**
- **Avoid touching heatsinks due to its high temperature after prolong use. (See caution as described below)**

CAUTION: HOT!!
PLEASE DO NOT
TOUCH THE HEAT SINK

- **During disassembly and assembly, please ensure proper service tools, equipments or jigs is being used.**
- **During replacement of component parts, please refer to the section of “Replacement Parts List” as described in the service manual.**
- **Select items from the following indexes when disassembly or replacement are required.**

- **Disassembly of Stand Assembly**
- **Replacement of Door Assembly**
- **Replacement of Cam Gear**
- **Disassembly of Lens Cover**
- **Disassembly of Net Frame Assembly**
- **Disassembly of Front Panel Block**
- **Disassembly of Gear Box Assembly**
- **Disassembly of Remote Sensor P.C.B. & iPod Open Switch P.C.B.**
- **Disassembly of Interlock Switch P.C.B.**
- **Replacement of iPod Tub Assembly**
- **Disassembly of Mini Side Lock**
- **Disassembly of iPhone P.C.B.**
- **Disassembly of Top Guide Reel**
- **Disassembly of Bottom Guide Reel**
- **Disassembly of Top Ornament Assembly**
- **Disassembly of Button P.C.B.**
- **Disassembly of Top Button & Power Light Piece**
- **Disassembly of Bluetooth P.C.B.**
- **Disassembly of Panel P.C.B.**
- **Disassembly of Jack Lid**
- **Disassembly of Tuner P.C.B.**
- **Disassembly of CD Mechanism**
- **Disassembly of CD Servo P.C.B.**
- **Disassembly of SMPS P.C.B.**
- **Replacement of Diode (D702)**
- **Replacement of Transistor (Q701)**
- **Disassembly of Passive Radiator (SP6)**
- **Disassembly of Passive Radiator (SP5)**
- **Disassembly of Front Speaker (SP2)**
- **Disassembly of Front Speaker (SP1)**
- **Disassembly of Piezo Unit (SP8)**
- **Disassembly of Piezo Unit (SP7)**
- **Disassembly of Passive Radiator (SP4)**
- **Disass embly of Passive Radiator (SP3)**
- **Disassembly of Main P.C.B.**

8.1. Disassembly flow chart

The following chart is the procedure for disassembling the casing and inside parts for internal inspection when carrying out the servicing.
To assemble the unit, reverse the steps shown in the chart below.

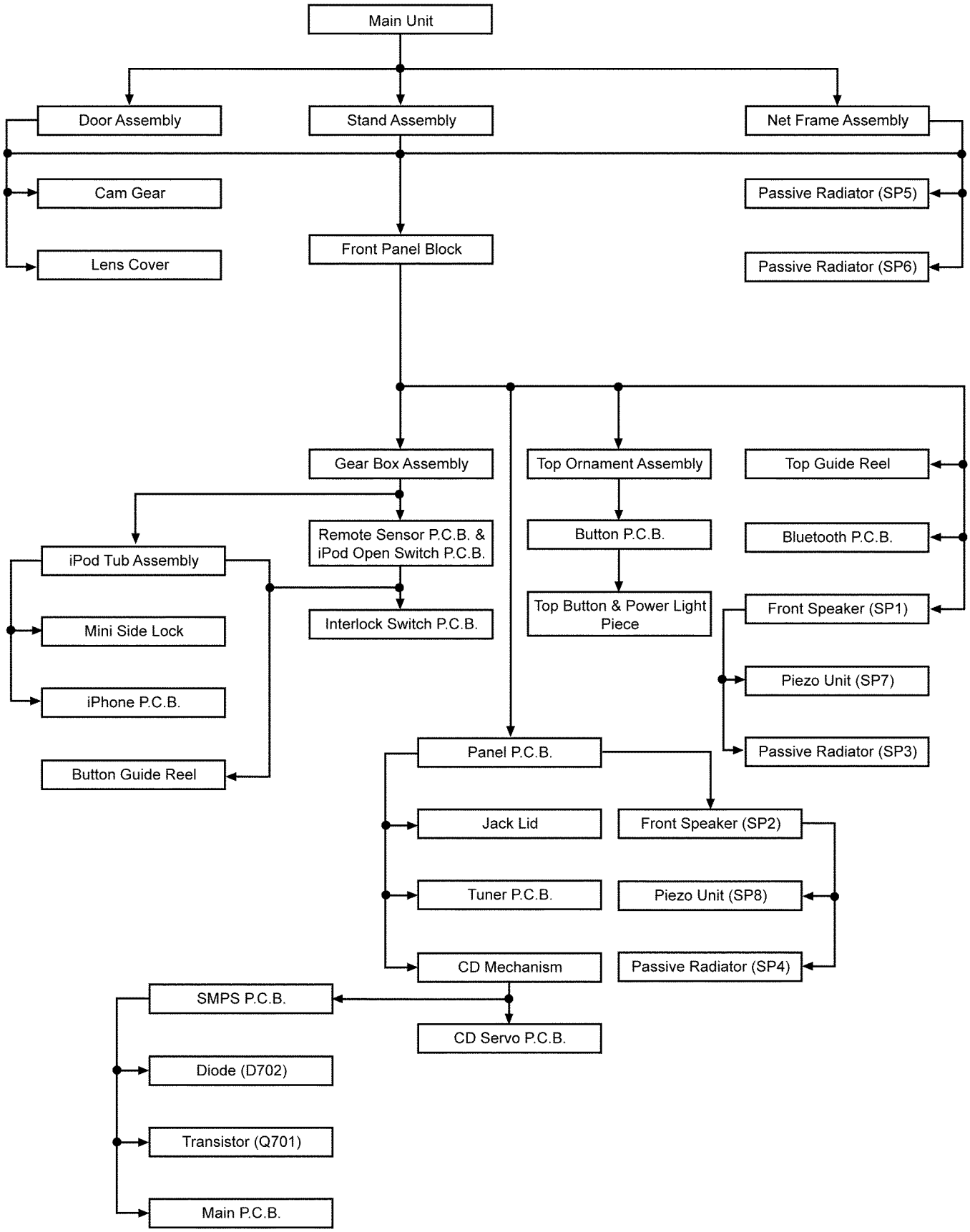

8.2. Types of Screws

CAUTION NOTE:
Please use original screw and at correct locations.

Below shown is part no. of different screw types used:

- ⓐ : RHD26046
- ⓑ : VHD1224-1
- ⓒ : XTN2+6GFJ
- ⓓ : XQN17+C28FJ
- ⓔ : XTB3+8JFJK
- ⓕ : XTB3+8JFJ
- ⓖ : XTW3+12TFJK
- ⓗ : XTW2+6SFJ
- ⓘ : RHD26043-1
- ⓙ : RHD14129

8.3. Main Parts Location Diagram

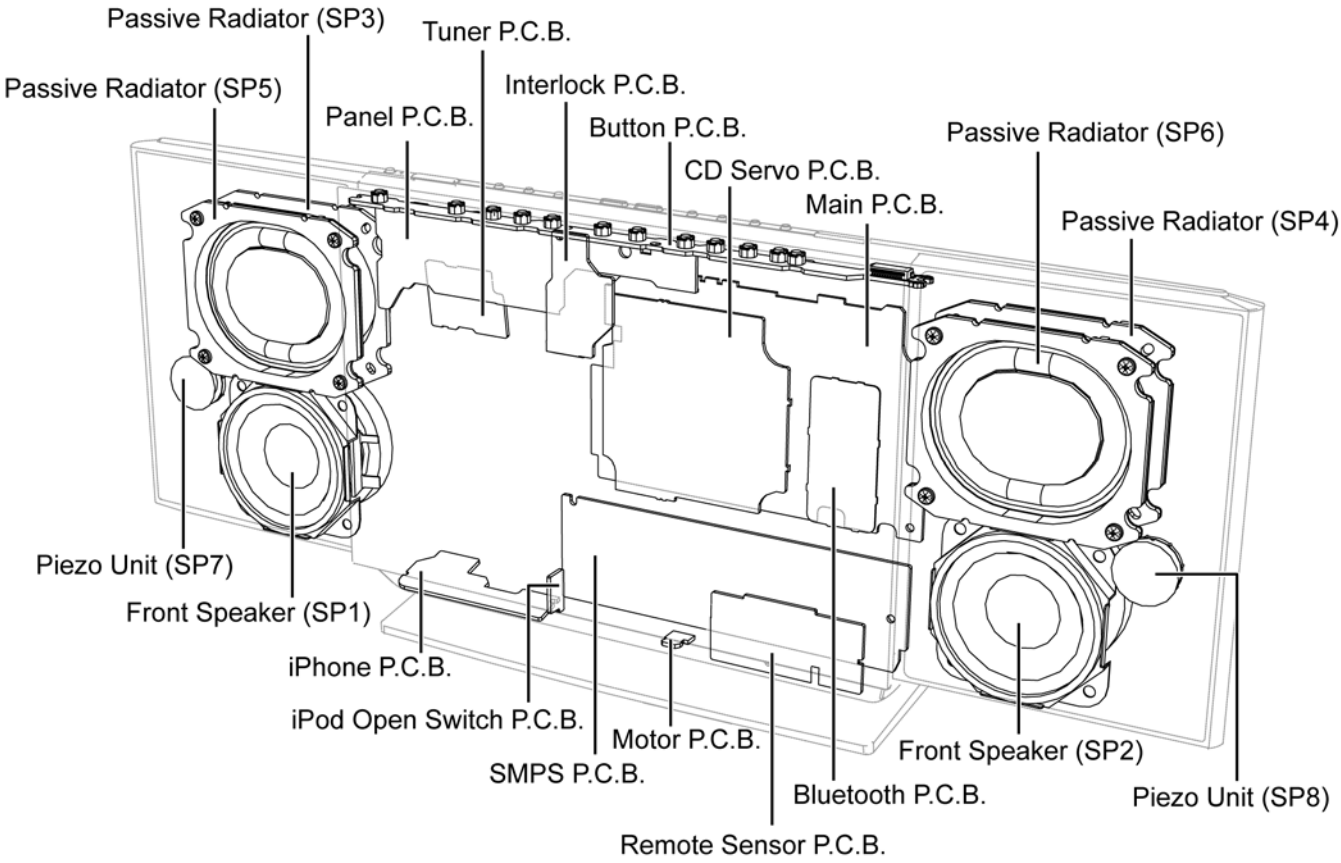

8.4. Disassembly of Stand Assembly

Step 1 : Remove 4 screws.

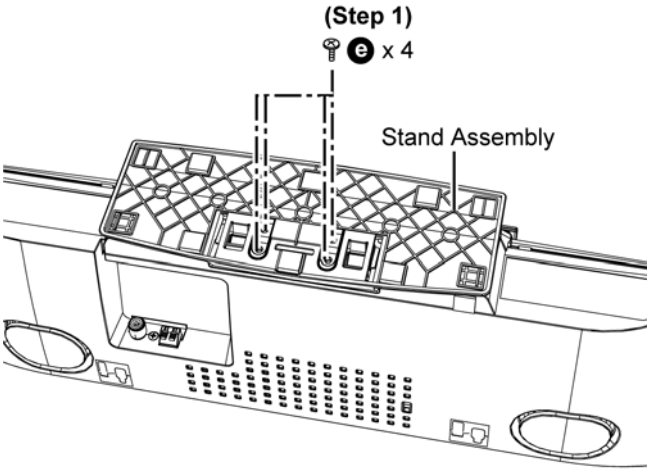

Step 2 : Remove the Stand Assembly.

Caution : During assembling, ensure a "Tack" sound is hear when the Stand Assembly fully catch into the Rear Cabinet.

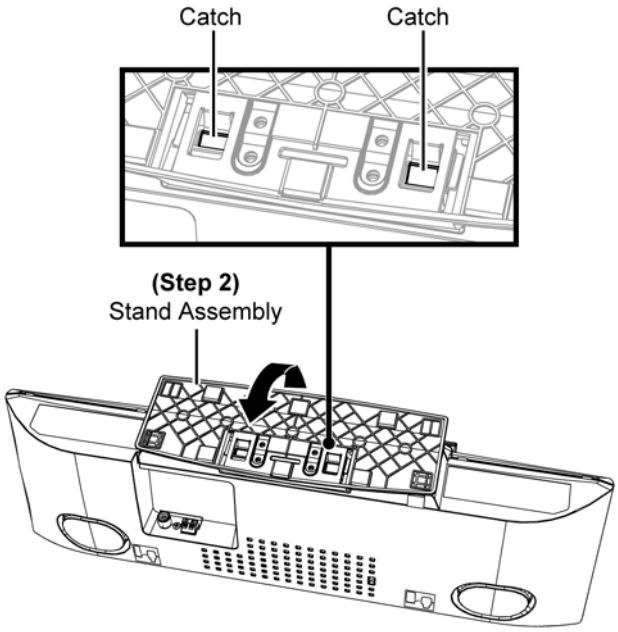

8.5. Replacement of Door Assembly

8.5.1. Disassembly of Door Assembly

Step 1 : Upset the main unit as diagram shown.
Step 2 : Insert a flathead screwdriver into the hole behind the Door Assembly.
Step 3 : Push the Cam Gear from point A to B.
Note : The Cam Gear will be disengage after pushing.

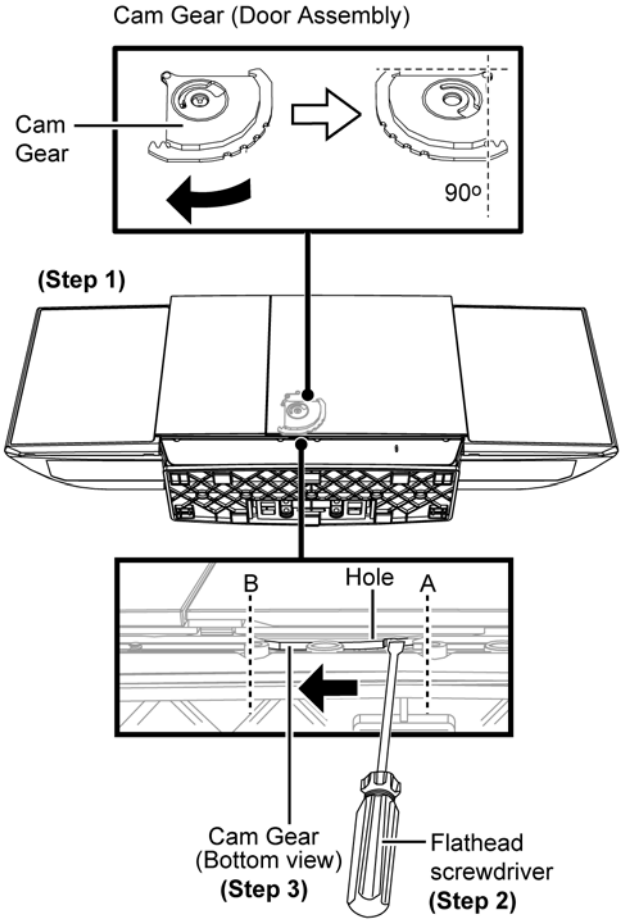

Step 4 : Gently push the Door Assembly until it is fully open.

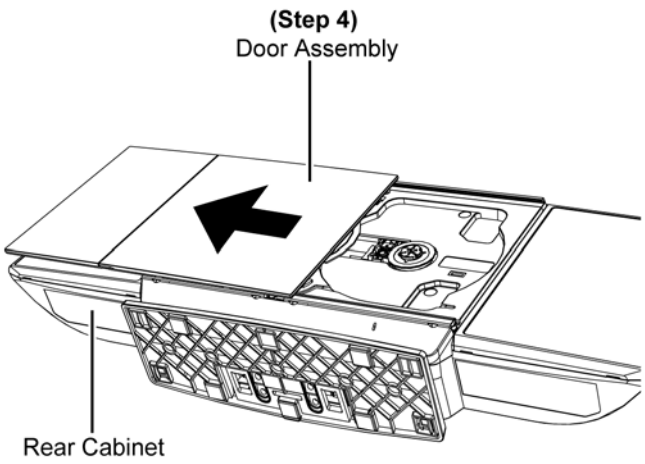

Step 5 : Lift up the Door Assembly as arrow (1) shown and push the Door Assembly as arrow (2) shown.

Step 6 : Gently push the Door Assembly until it is fully open.

Caution : During disassembling, avoid touching the surface of OPU lens.

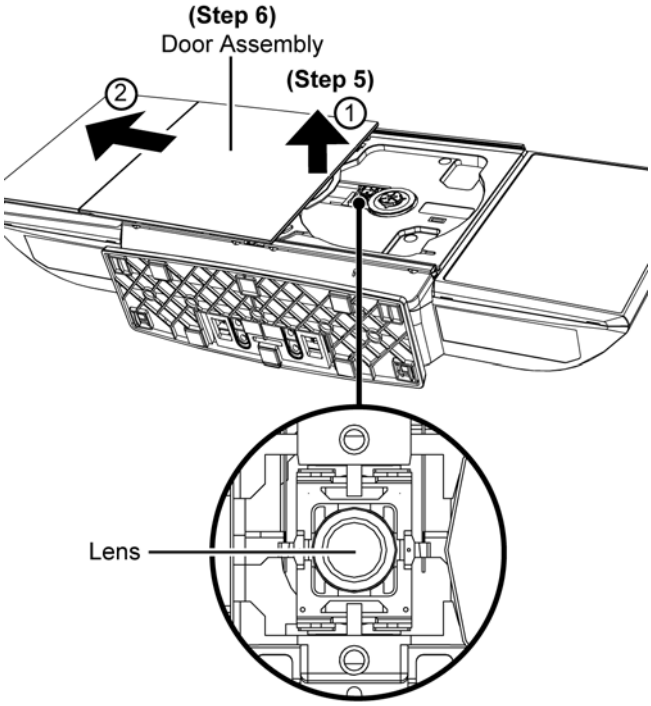

8.5.2. Assembly of Door Assembly

Step 1 : Turn the Cam Gear as diagram shown.

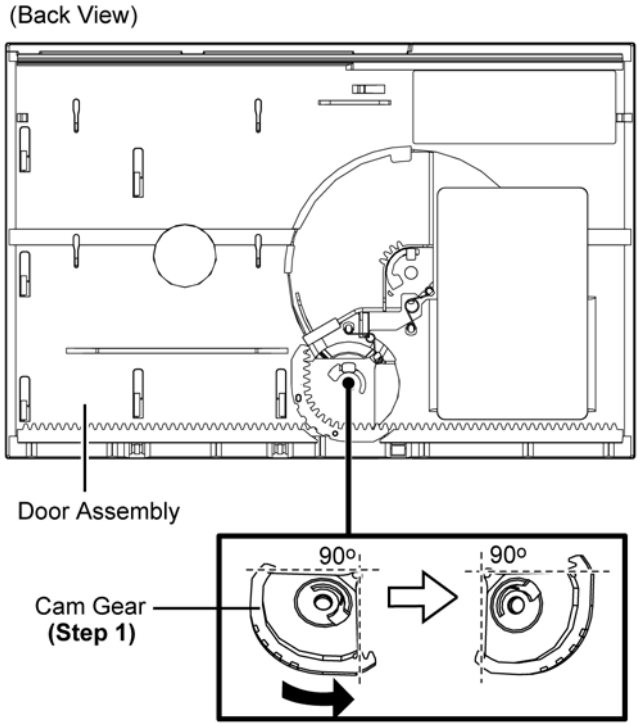

Step 2 : Align the Door Assembly (Guiding Rib A) with the front panel (Guide Reel A) and Door Assembly (Guiding Rib B) with the front panel (Guide Reel B).

Step 3 : Gently slide the Door Assembly until it is fully closed.

Caution : Avoid using strong force, ensure the Door Assembly move smoothly. Repeat (Step 1 to Step 3) if there is problem in the assembly.

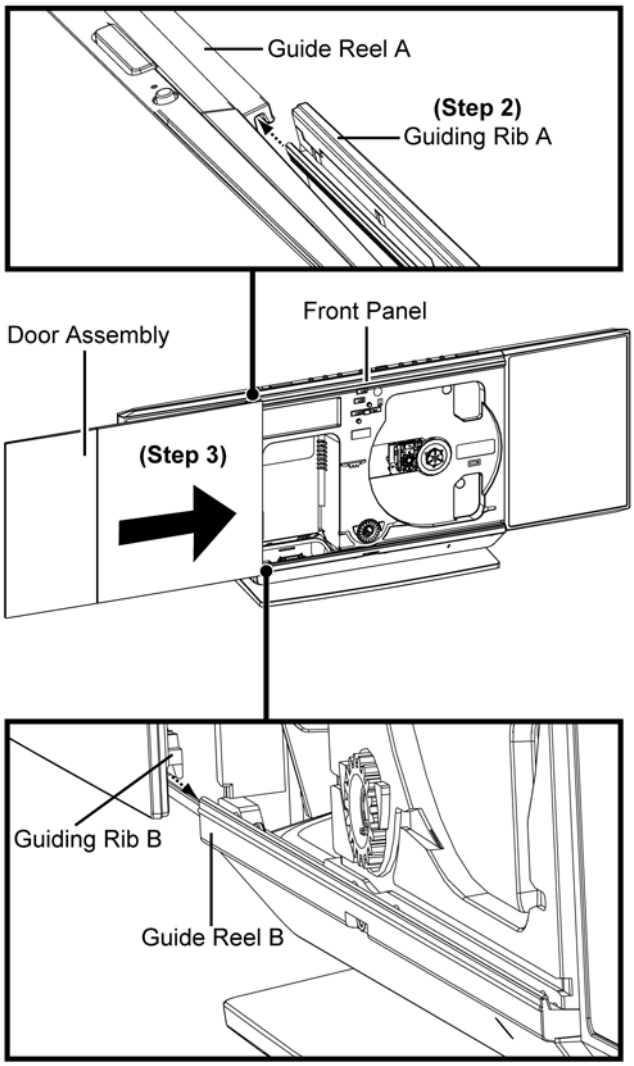

8.6. Replacement of Cam Gear

- Refer to “Disassembly of Door Assembly”

8.6.1. Disassembly of Cam Gear

Step 1 : Remove Jack Lid Spring.

Caution : Keep the Jack Lid Spring in safe place and place them back during assembling.

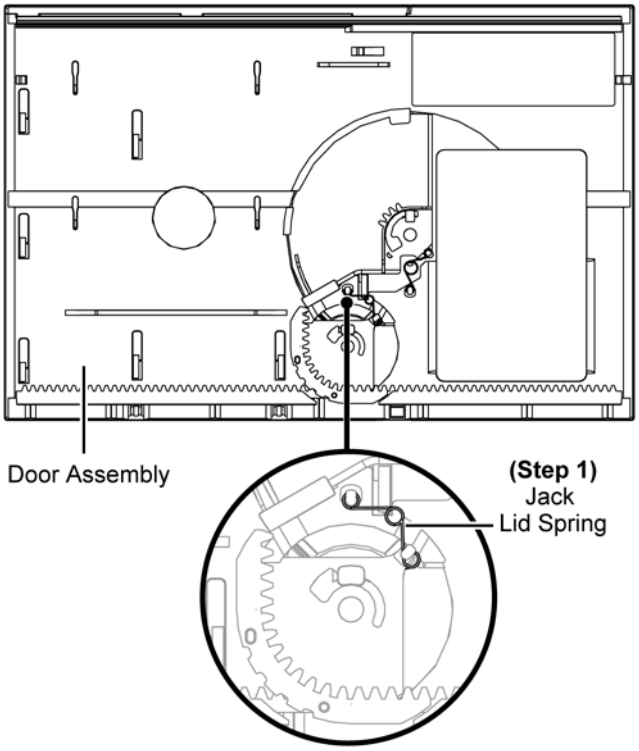

Step 2 : Lift up the Cam Gear at dotted area.

Caution : Do not exert excessive force to lift up the Cam Gear or it may be broken.

Step 3 : Turn the Cam Gear clockwise as arrow shown.

Step 4 : Remove the Cam Gear.

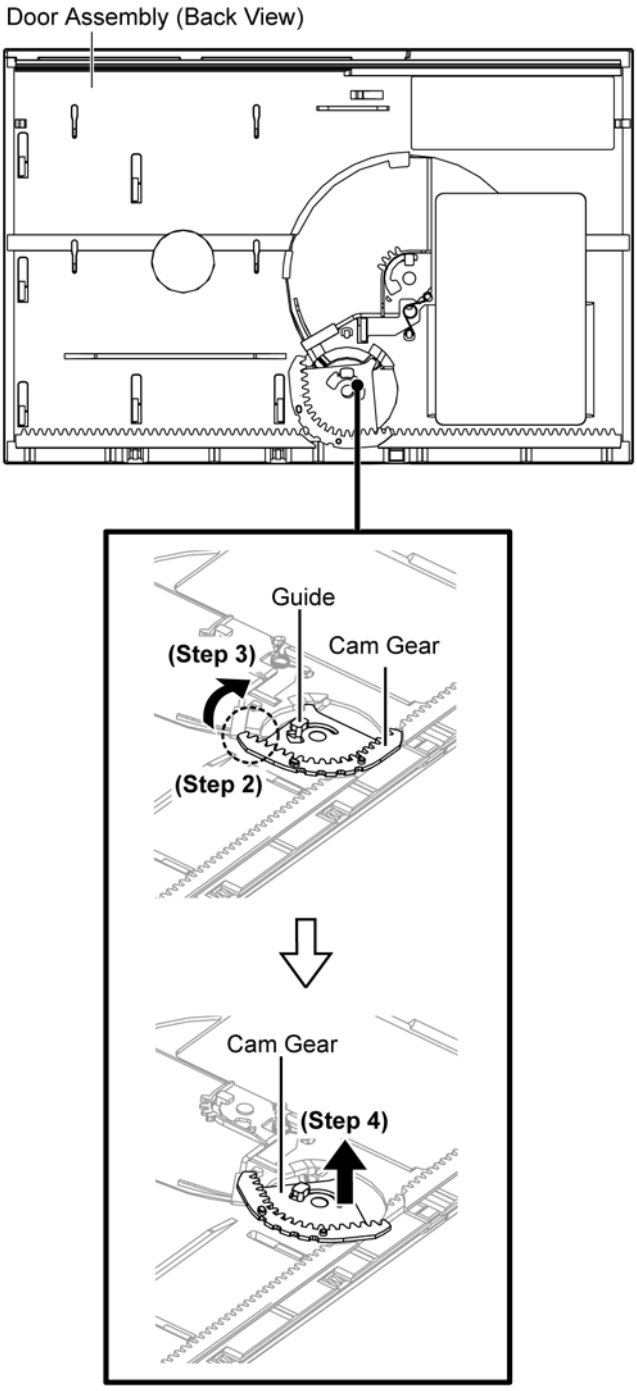

8.6.2. Assembly of Cam Gear

Step 1 : Place the Cam Gear onto the Door Assembly as diagram shown.

Step 2 : Gently press and hold the portion (1) of the Cam Gear and turn the Cam Gear anti-clockwise by pushing the portion (2) of the Cam Gear.

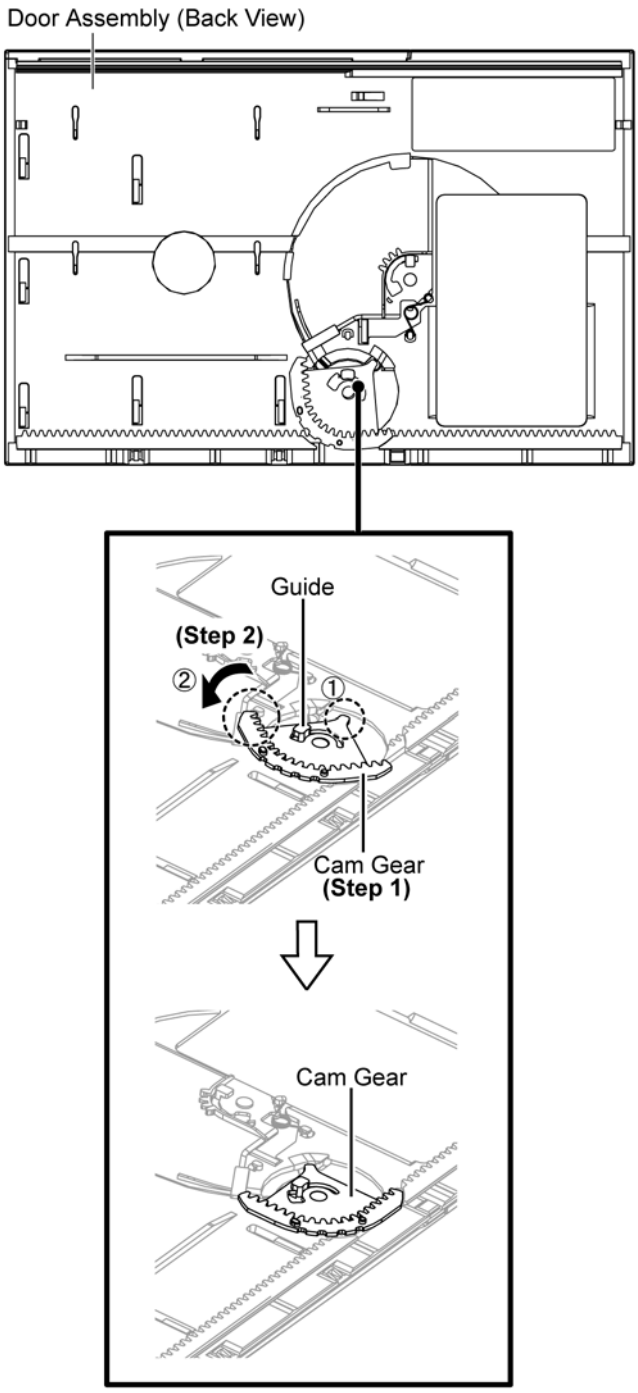

Step 3 : Place Jack Lid Spring to the Door Assembly as shown.

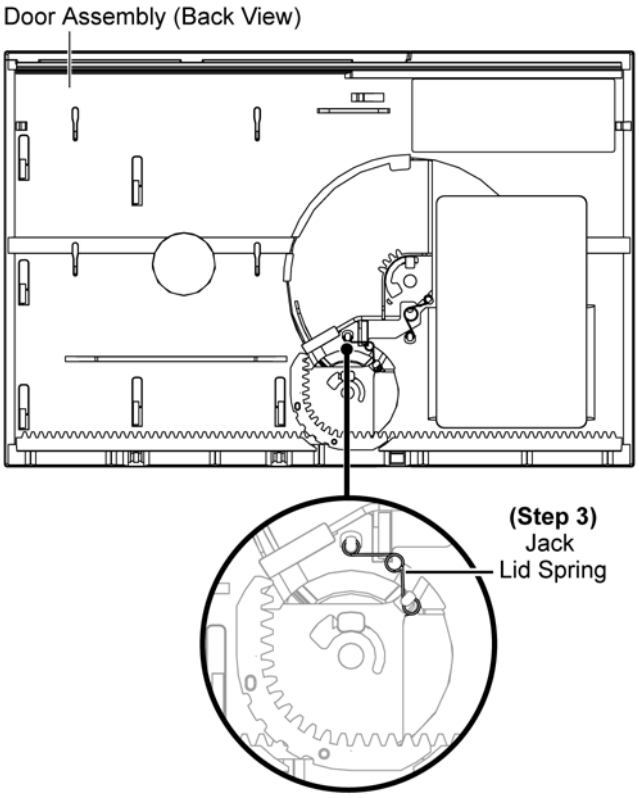

8.7. Disassembly of Lens Cover

- Refer to “Disassembly of Door Assembly”

Step 1 : Remove Lens Cover Spring.

Caution : Keep the Lens Cover Spring in safe place and place them back during assembling.

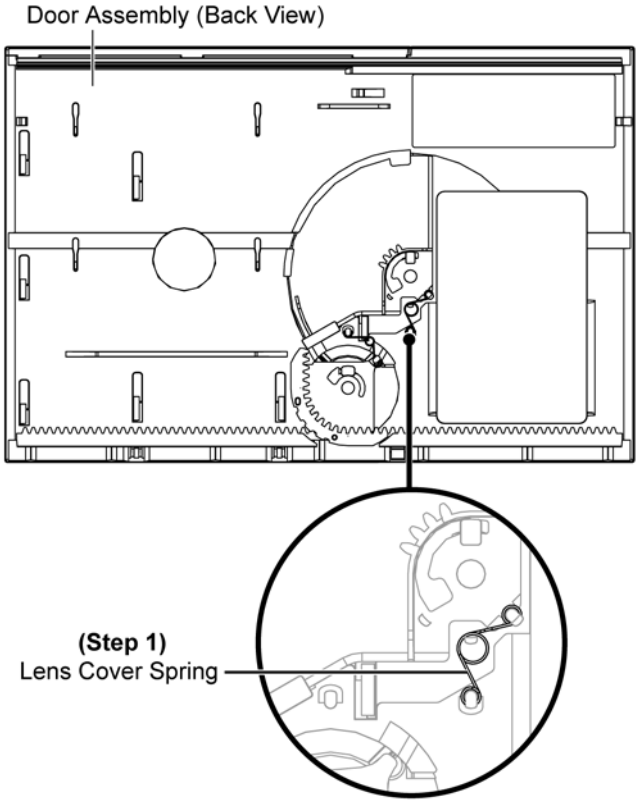

Step 2 : Turn the Lens Cover clockwise as arrow shown.
Step 3 : Stop at the guide and use a flathead screwdriver slightly lift up the catch to release the guide.
Step 4 : Remove the Lens Cover.

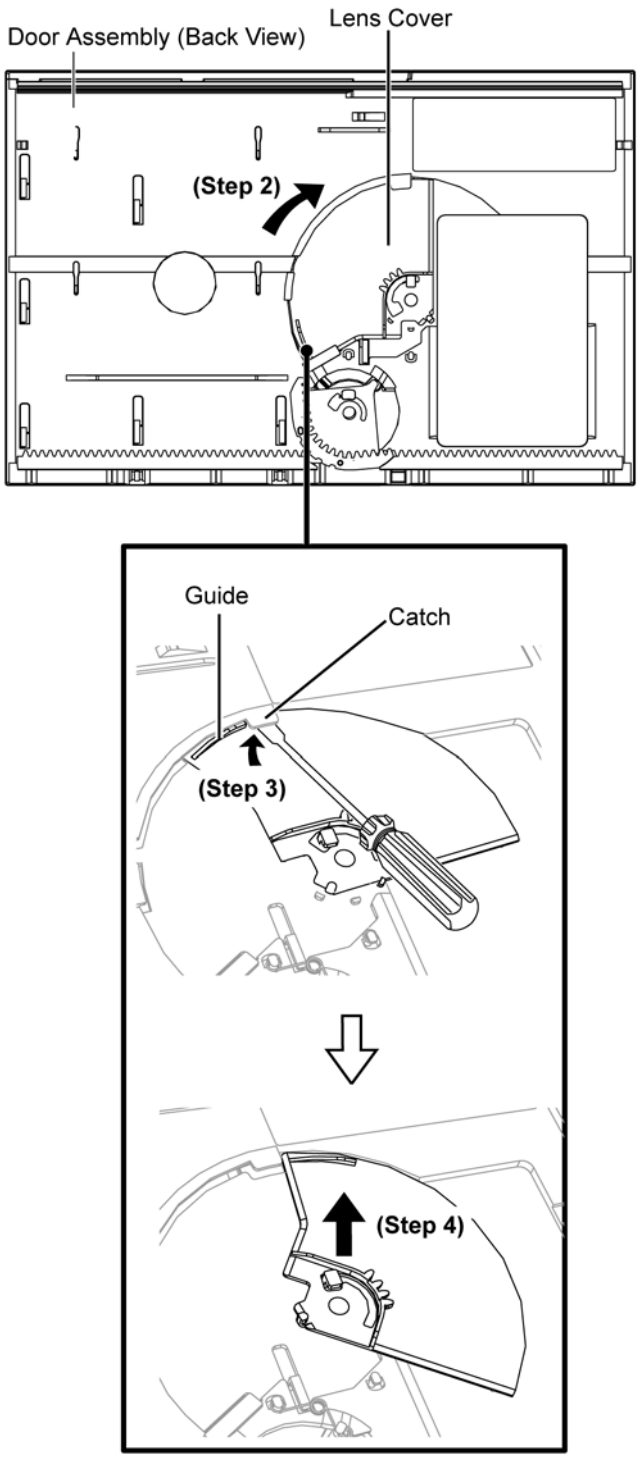

8.8. Disassembly of Net Frame Assembly

8.8.1. Disassembly of Net Frame Assembly (L)

Step 1 : Gently lift up Net Frame Assembly (L) with a flathead screwdriver to release 2 bosses in order of sequences (1) to (2) as shown.

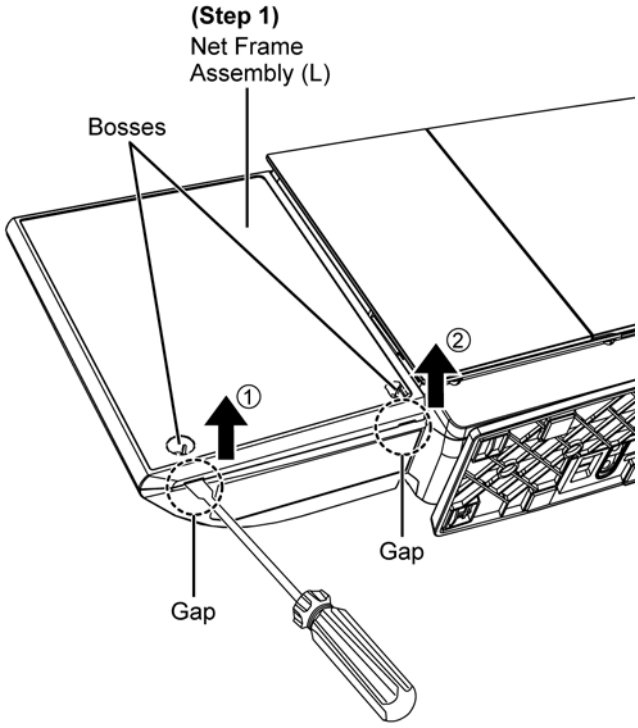

Step 2 : Remove Net Frame Assembly (L) in order of sequences (1) to (2) as shown.

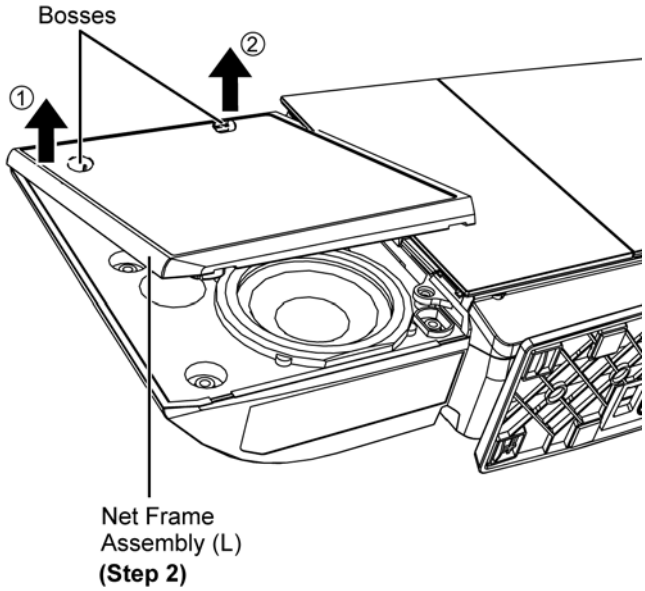

Caution : During assembling, ensure that the bosses of Net Frame Assembly (L) are aligned to their respective holes in Front Speaker Assembly (L) as shown.

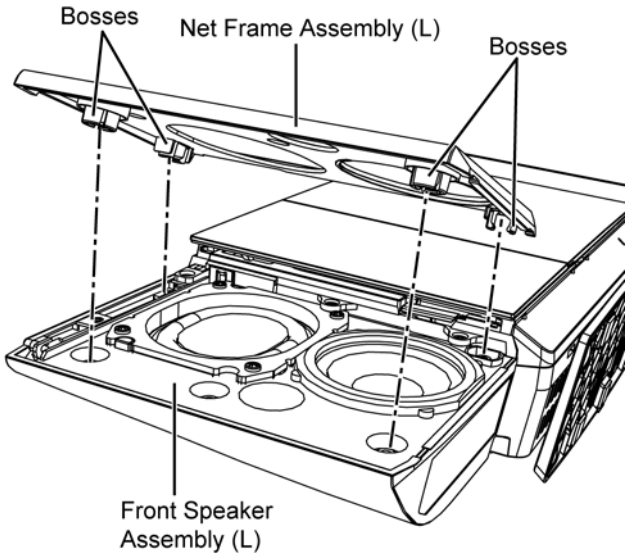

8.8.2. Disassembly of Net Frame Assembly (R)

Step 1 : Gently lift up Net Frame Assembly (R) with a flathead screwdriver to release 2 bosses in order of sequences (1) to (2) as shown.

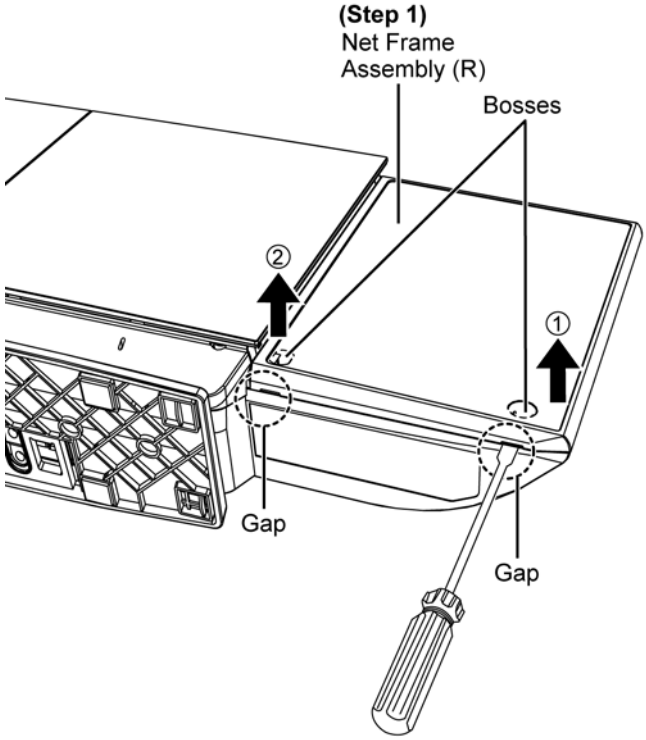

Step 2 : Remove Net Frame Assembly (R) in order of sequences (1) to (2) as shown.

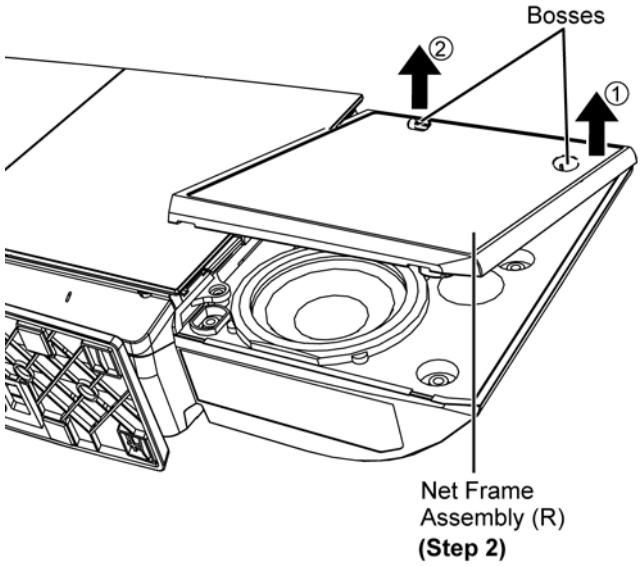

Caution : During assembling, ensure that the bosses of Net Frame Assembly (R) are aligned to their respective holes in Front Speaker Assembly (R) as shown.

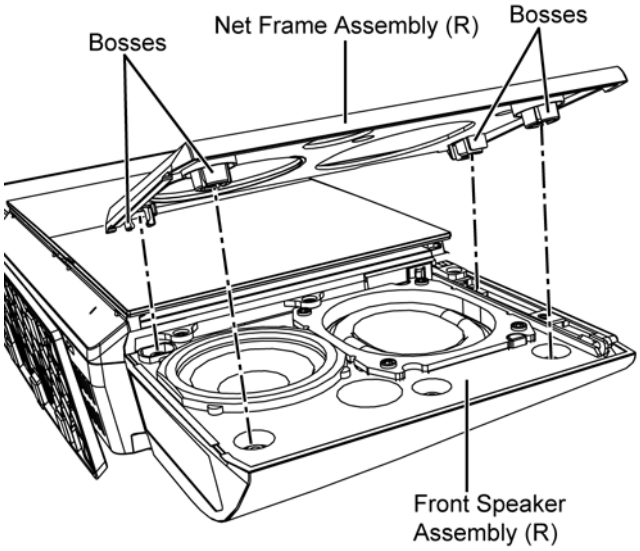

8.9. Disassembly of Front Panel Block

- Refer to “Disassembly of Stand Assembly”
- Refer to “Disassembly of Door Assembly”
- Refer to “Disassembly of Net Frame Assembly”

Step 1 : Remove 9 screws.

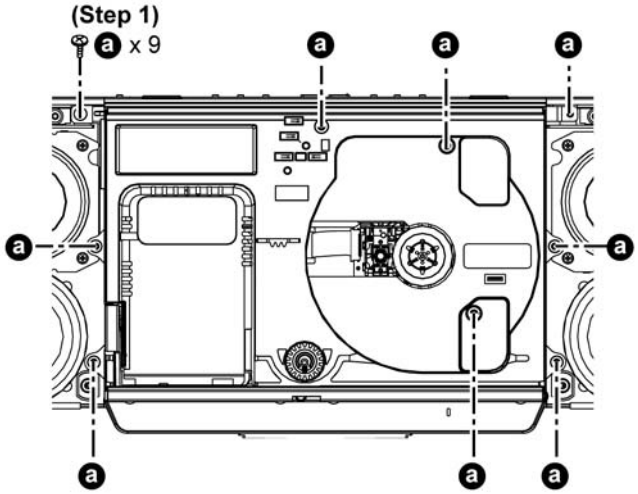

Step 2 : Release the 3 catches on the Front Panel Block.

(Bottom View)

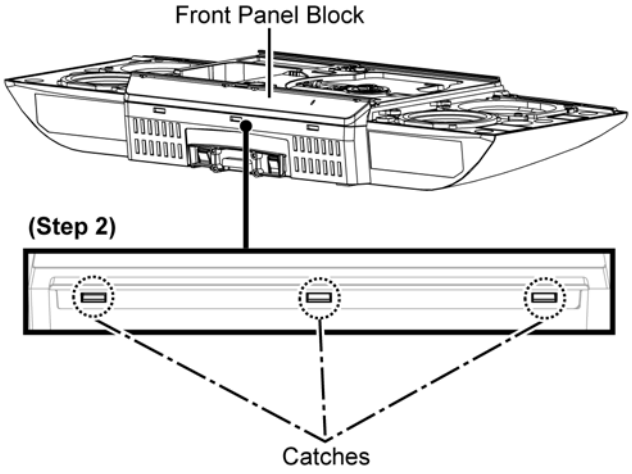

Step 3 : Slightly lift up the Front Panel Block.
Step 4 : Detach 5P wire at the connector (CN1002) on the iPhone P.C.B..

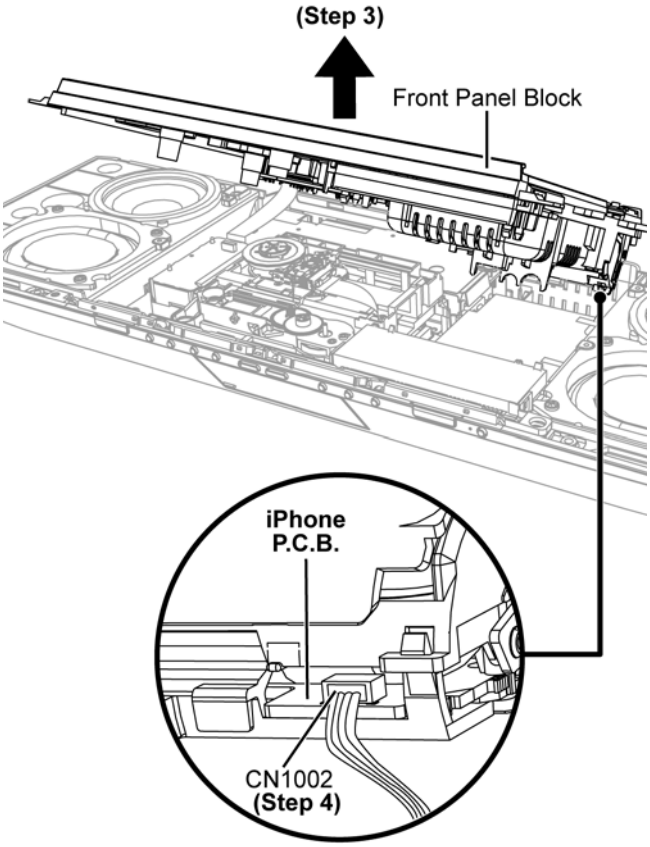

Step 5 : Detach 15P FFC at the connector (CN303) on the Main P.C.B..

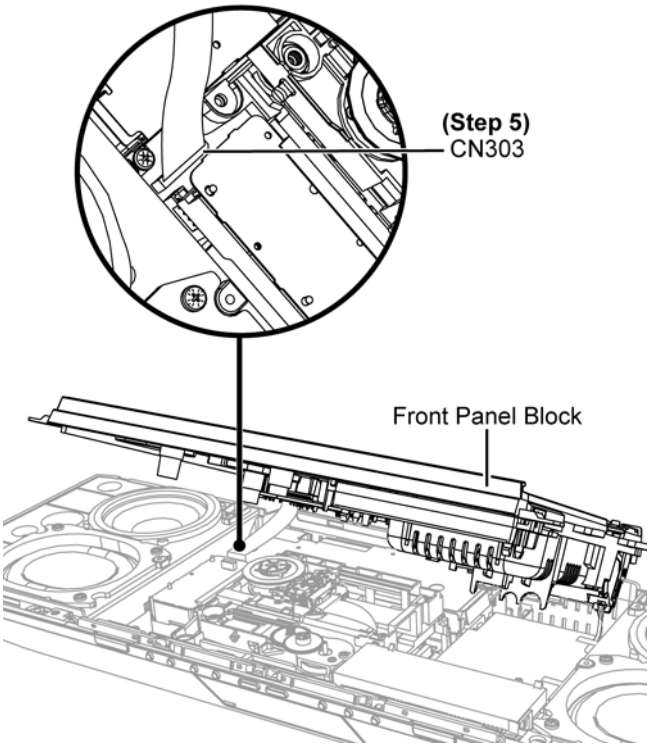

Step 6 : Remove Front Panel Block.

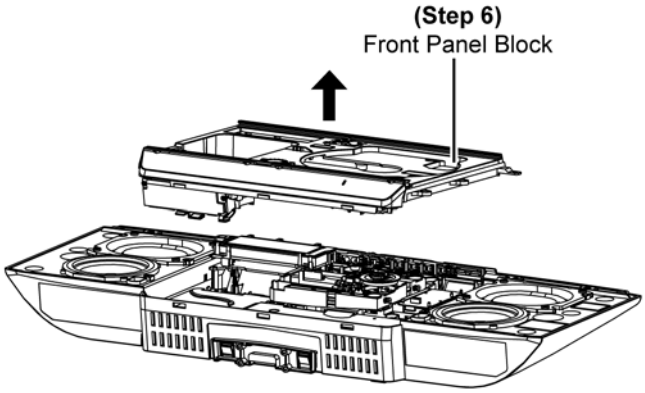

8.10. Disassembly of Gear Box Assembly

- Refer to “Disassembly of Stand Assembly”
- Refer to “Disassembly of Door Assembly”
- Refer to “Disassembly of Net Frame Assembly”
- Refer to “Disassembly of Front Panel Block”

Step 1 : Remove 3 screws.

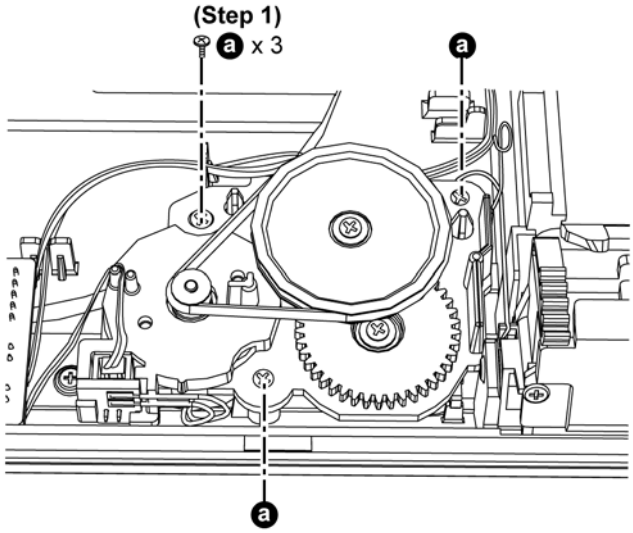

Step 2 : Release 2P wire from the locator.
Step 3 : Detach 2P wire at the connector (PR2) on the Motor P.C.B..

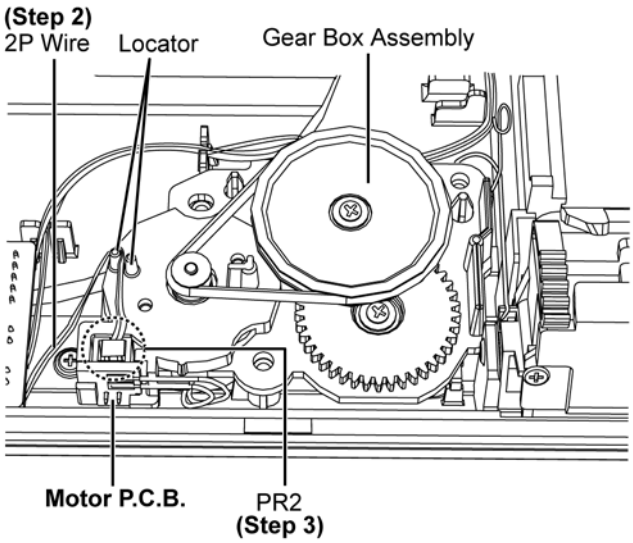

Step 4 : Remove Gear Box Assembly & iPod Docking Spring.
Caution : During assembling, ensure the Gear Box Assembly is seated properly on the locator.

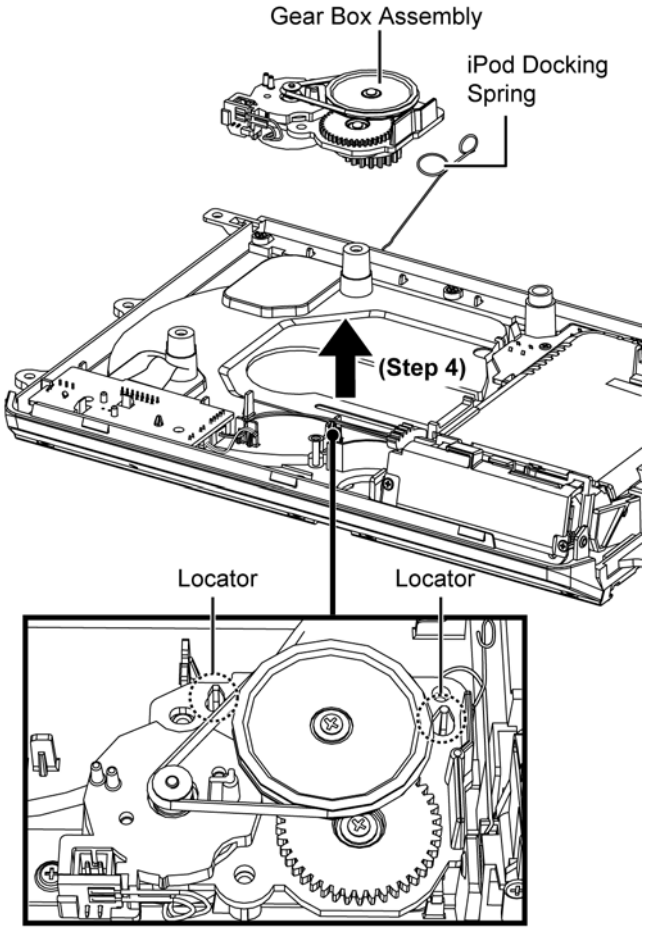

Caution : Keep the iPod Docking Spring in safe place and place them back during assembling.

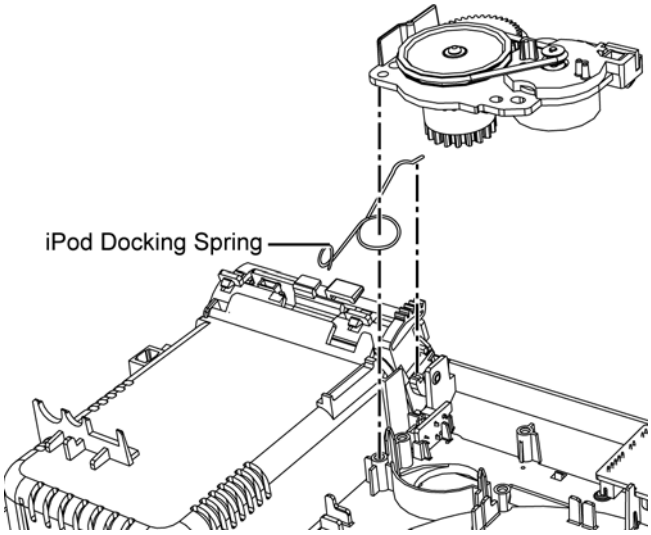

8.10.1. Disassembly of Motor P.C.B.

- Refer to “Disassembly of Gear Box Assembly”

Step 1 : Remove 2P wire from slot.

Caution: During assembling, ensure the 2P wire is dress into the slot.

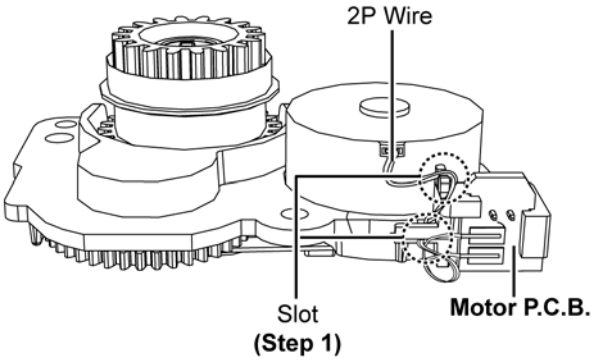

Step 2 : Release 2 catches as show.

Step 3 : Remove Motor P.C.B..

Caution: During assembling, ensure the Motor P.C.B. is properly seated by the 2 catches.

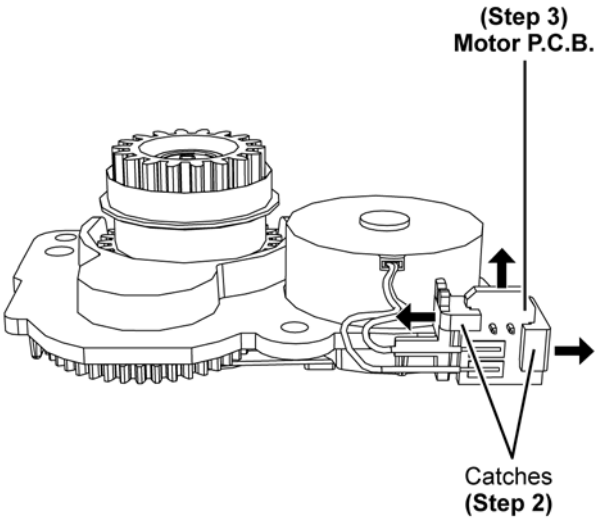

Step 4 : Desolder pin on the solder side of Motor P.C.B. and remove the Motor P.C.B..

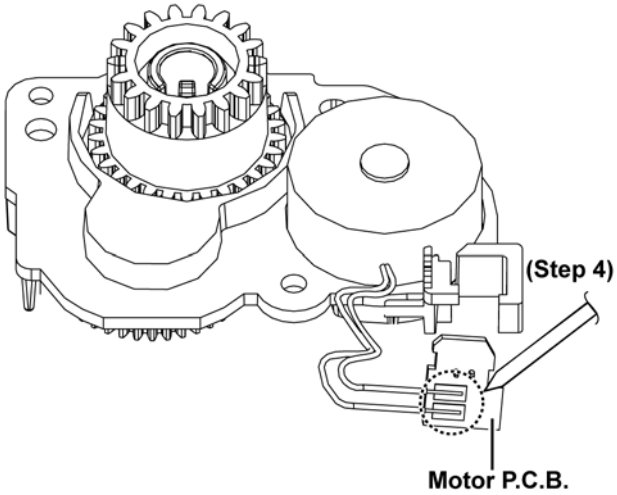

8.10.2. Disassembly of Belt, Pully Gear, Middle Gear and Drive Gear.

- Refer to “Disassembly of Gear Box Assembly”

Step 1 : Remove Belt.

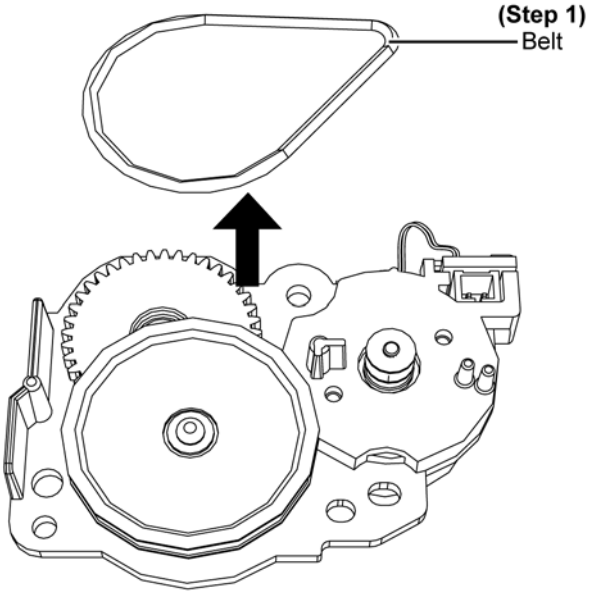

Step 2 : Remove 1 screw.

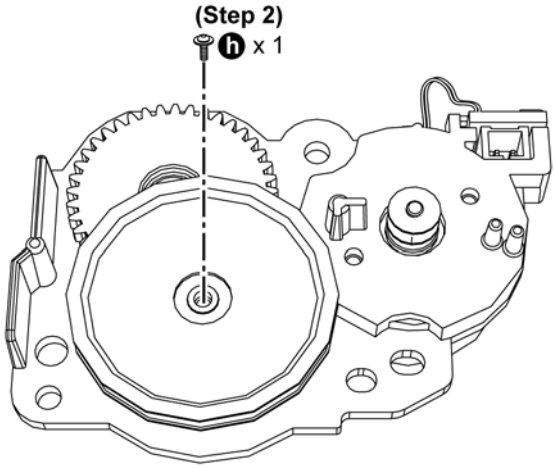

Step 3 : Remove Pulley Gear.

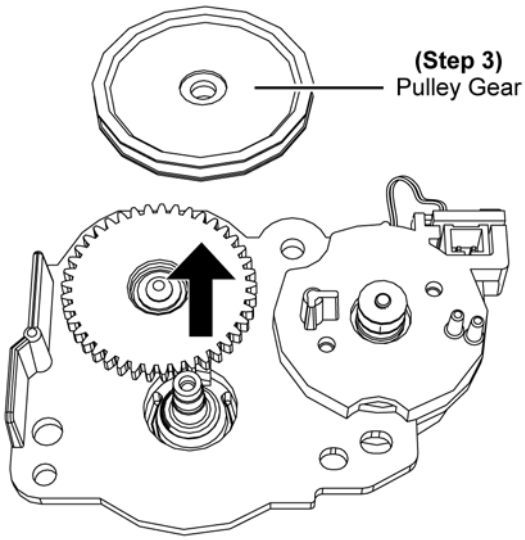

Step 4 : Remove 1 screw.

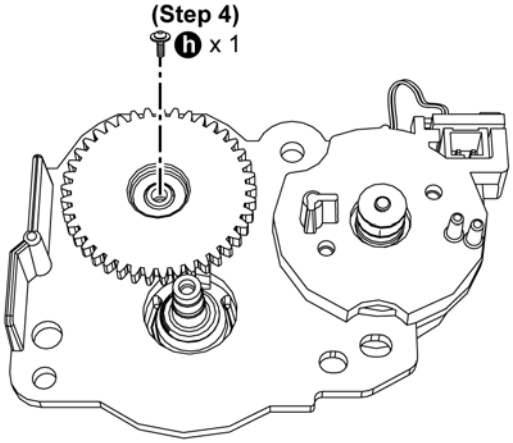

Step 5 : Remove Middle Gear.

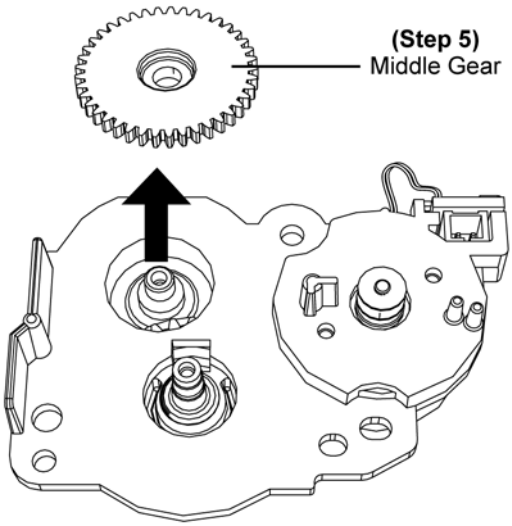

Step 6 : Use the minus screwdriver to release a catch as shown.

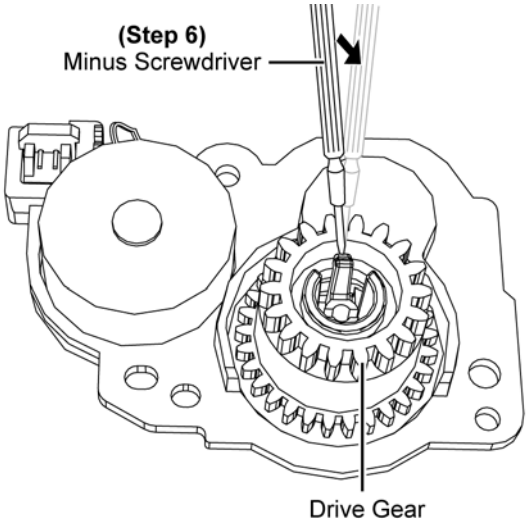

Step 7 : Remove Drive Gear.

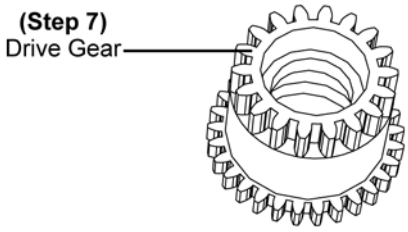

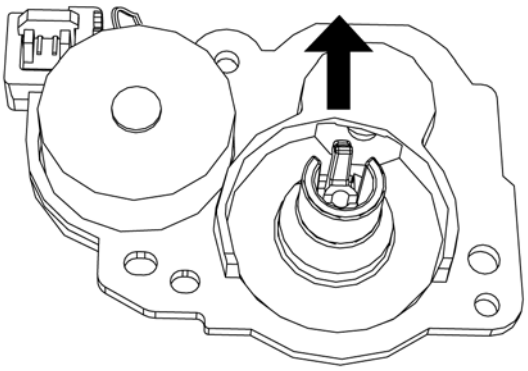

8.10.3. Disassembly of Motor Assembly.

- Refer to “Disassembly of Gear Box Assembly”
- Refer to “Disassembly of Motor P.C.B.”
- Refer to (Step 1) of item 8.10.2.

Step 1 : Remove 2 screws.
Step 2 : Remove Motor Assembly.

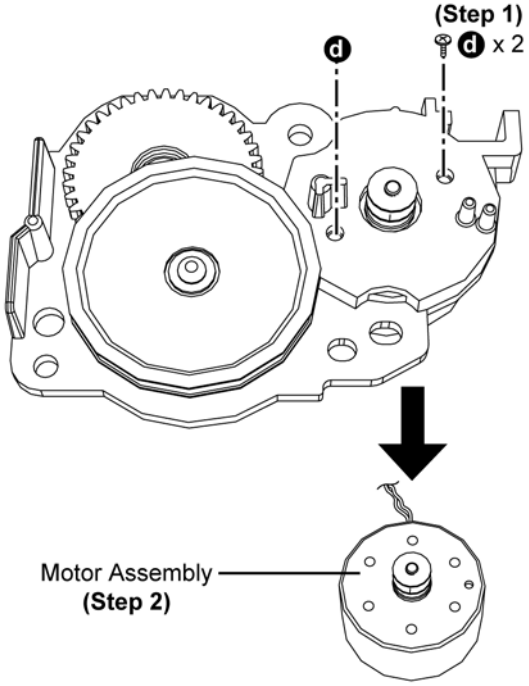

8.11. Disassembly of Remote Sensor P.C.B. & iPod Open Switch P.C.B.

- Refer to “Disassembly of Stand Assembly”
- Refer to “Disassembly of Door Assembly”
- Refer to “Disassembly of Net Frame Assembly”
- Refer to “Disassembly of Front Panel Block”
- Refer to “Disassembly of Gear Box Assembly”

Step 1 : Release the wire from the slots.

Caution : During assembling, ensure the wire is fixed into the slots.

Step 2 : Remove 2 screws.

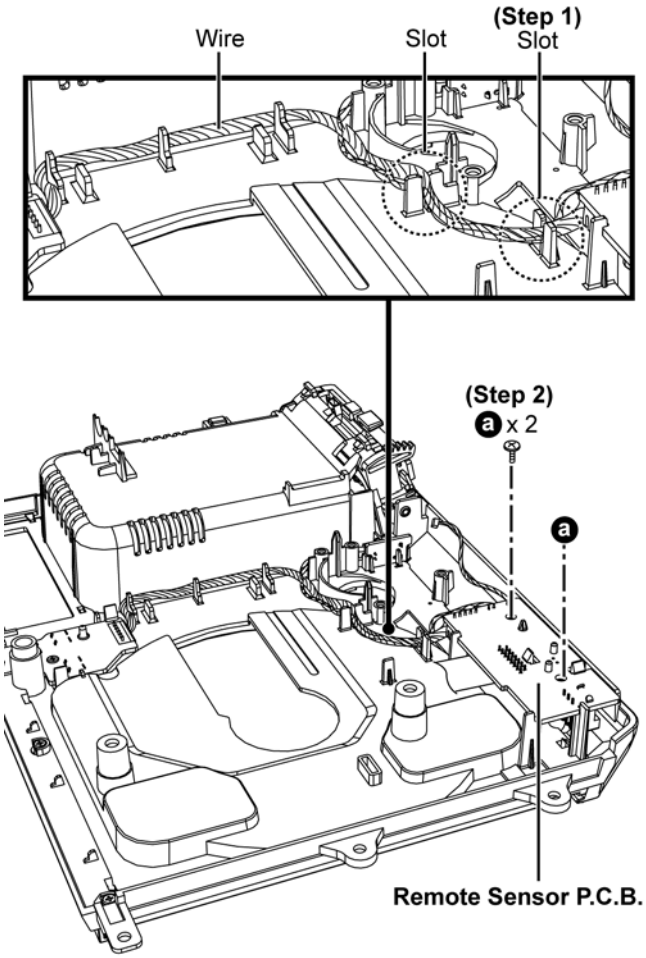

Step 3 : Flip over Remote Sensor P.C.B..

Caution : During assembling, ensure the Remote Sensor P.C.B. is seated properly on the locator.

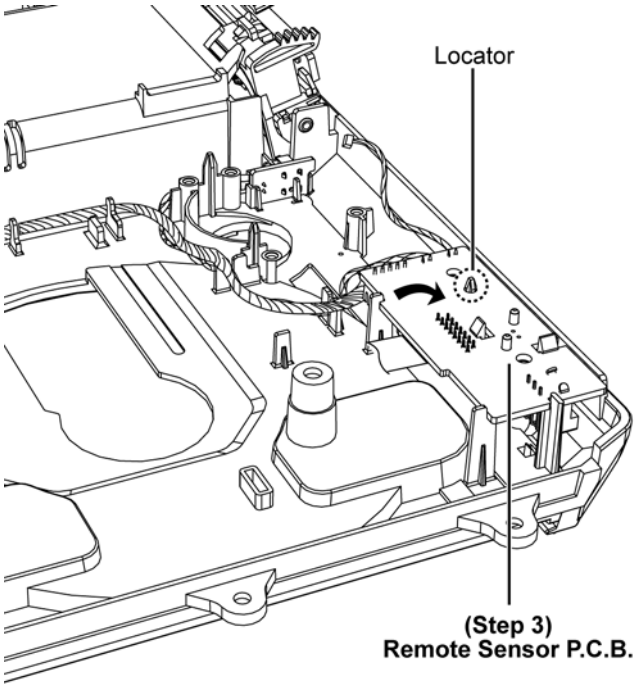

Step 4 : Detach 4P wire at the connector (P901) on the Remote Sensor P.C.B..

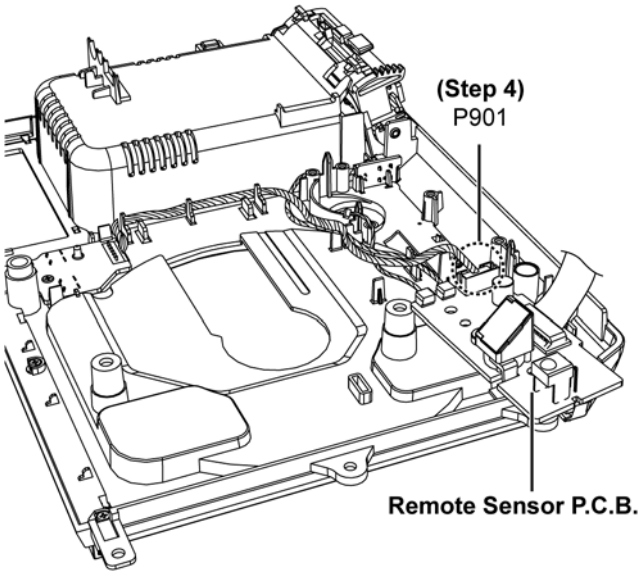

Step 5 : Lift up the iPod Open Switch P.C.B..

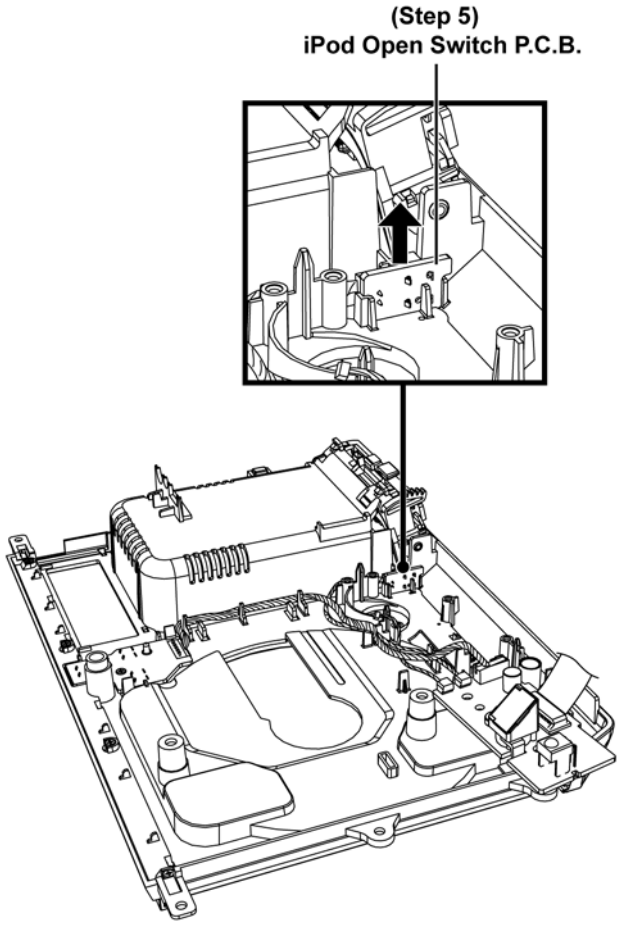

Step 6 : Remove iPod Open Switch P.C.B. & Remote Sensor P.C.B. together.

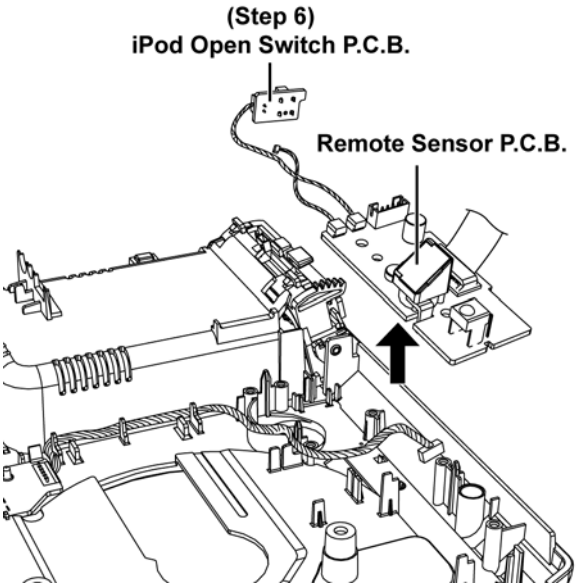

8.12. Disassembly of Interlock Switch P.C.B.

- Refer to “Disassembly of Stand Assembly”
- Refer to “Disassembly of Door Assembly”
- Refer to “Disassembly of Net Frame Assembly”
- Refer to “Disassembly of Front Panel Block”
- Refer to “Disassembly of Gear Box Assembly”
- Refer to (Step 1) - (Step 4) of item 8.11.

Step 1 : Release the Wire from the slots.

Caution : During assembling, ensure the wire is fixed into the slot.

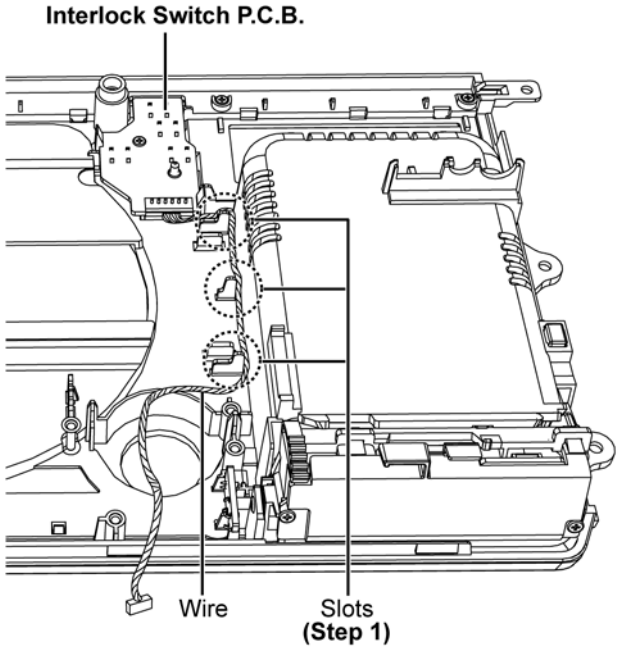

Step 2 : Remove 1 screw.
Step 3 : Release 2 catches.

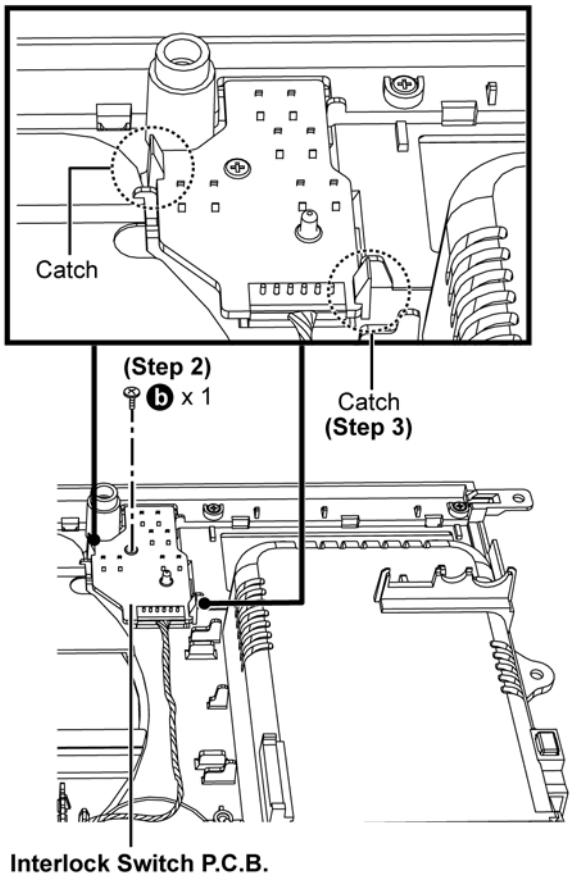

Step 4 : Remove Interlock Switch P.C.B..
Caution : During assembling, ensure the Interlock Switch P.C.B. is fully catched and seated on the locator.

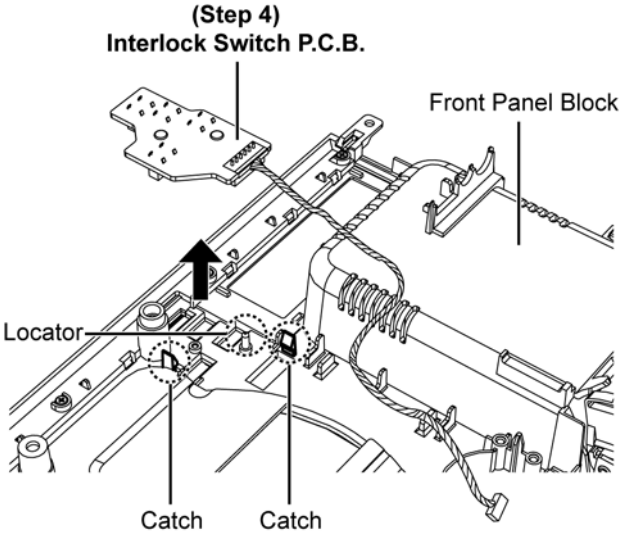

8.13. Replacement of iPod Tub Assembly

- Refer to “Disassembly of Stand Assembly”
- Refer to “Disassembly of Door Assembly”
- Refer to “Disassembly of Net Frame Assembly”
- Refer to “Disassembly of Front Panel Block”
- Refer to “Disassembly of Gear Box Assembly”

8.13.1. Disassembly of iPod Tub Assembly

Step 1 : Insert a flathead screwdriver below the Boss of the iPod Tub Assembly.
Step 2 : Push inwards and lift up to release the boss of the iPod Tub Assembly.

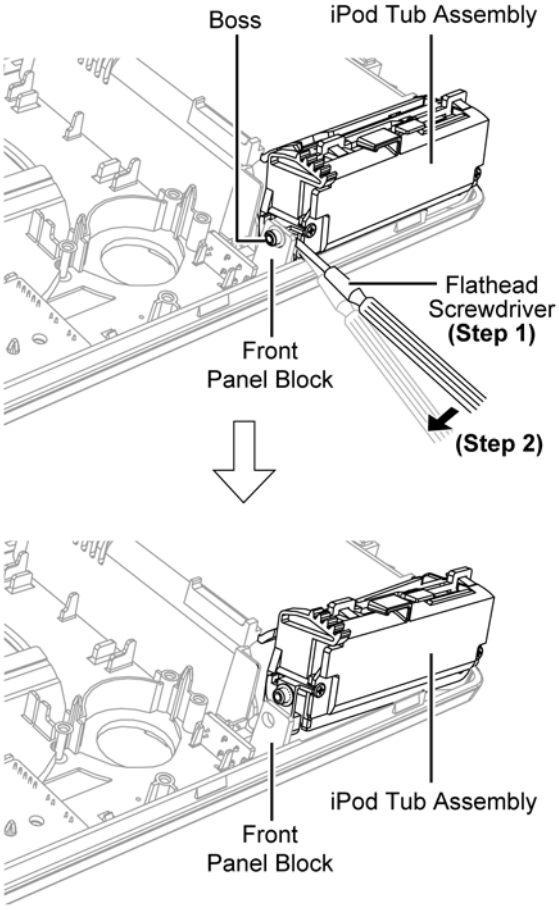

Step 3 : Slightly lift up iPod Tub Assembly as shown.

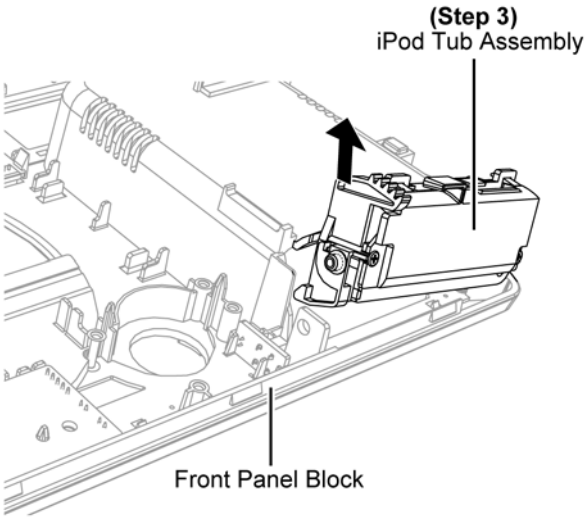

Step 4 : Pull the Button as arrow shown to release the iPod Tub Assembly.

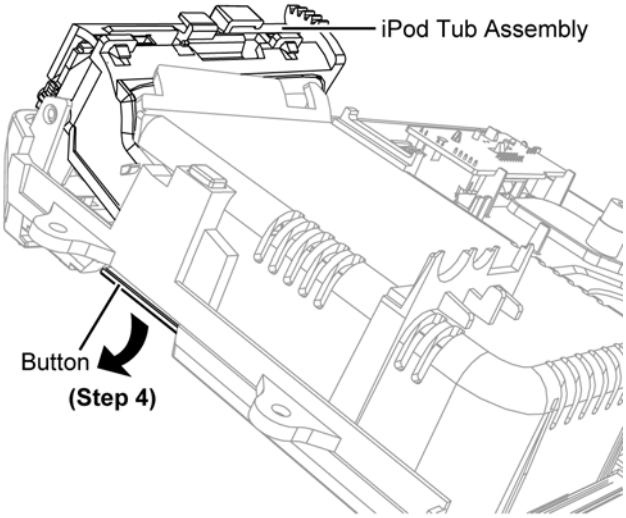

Step 5 : Pull out the iPod Tub Assembly as arrow shown.
Step 6 : Twist the iPod Tub Assembly as arrow shown.

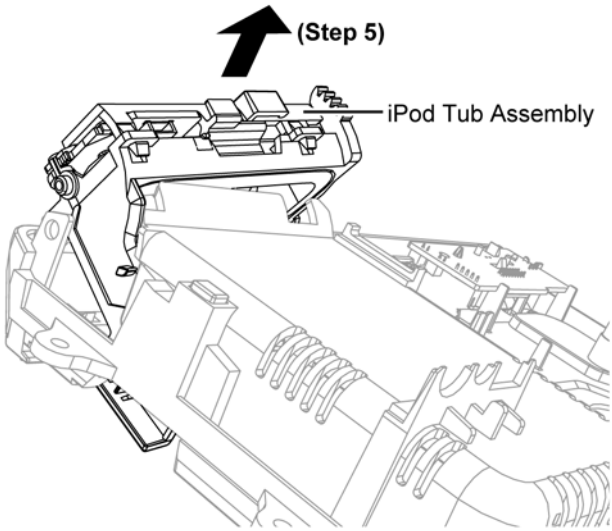

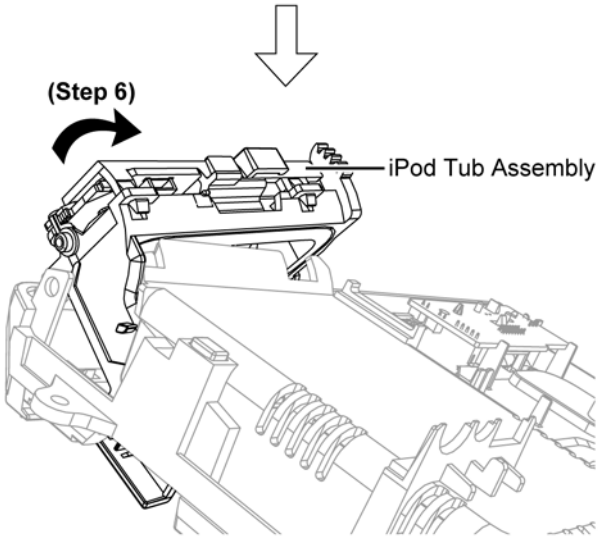

Step 7 : Remove the iPod Tub Assembly as shown.

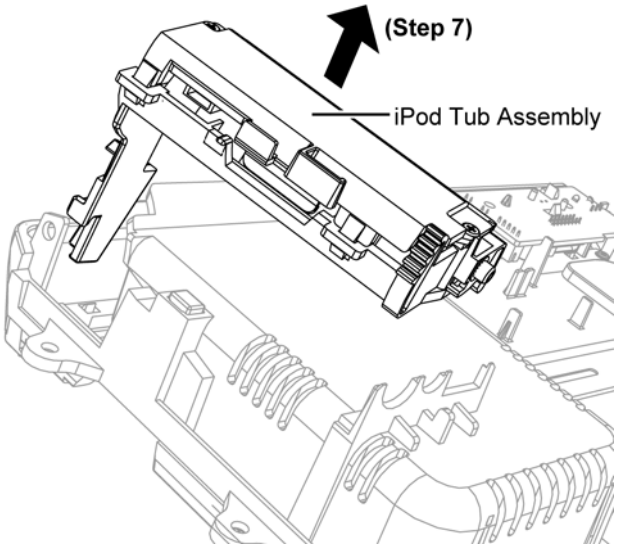

8.13.2. Assembly of iPod Tub Assembly

Step 1 : Insert the iPod Tub Assembly onto Front Panel Block as arrow shown.

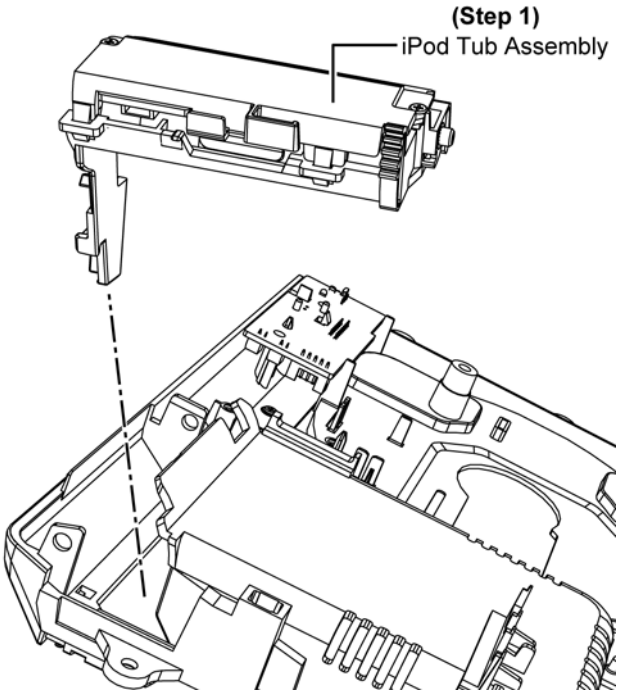

Step 2 : Twist the iPod Tub Assembly as arrow shown.

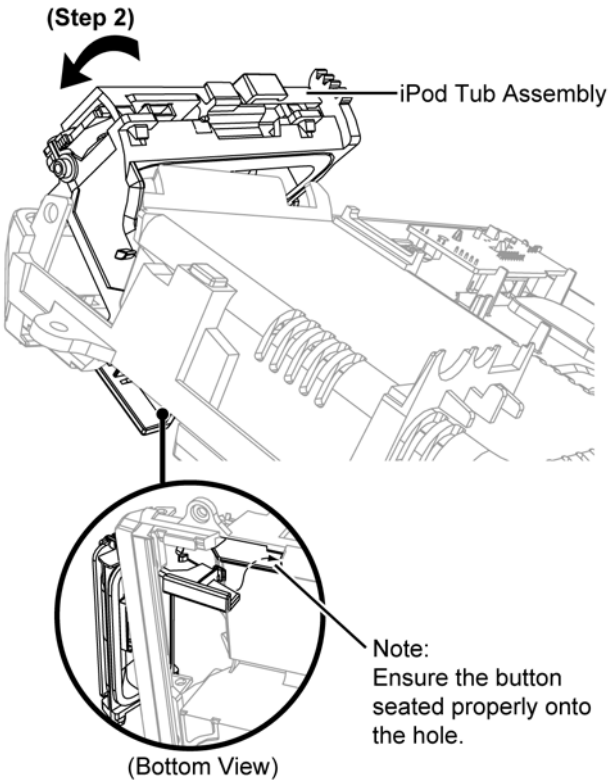

Step 3 : Slighly push the Front Panel Block outward as arrow shown and insert the iPod Tub Assembly boss onto Front Panel Block hole.

Caution : During assembling, ensure iPod Tub Assembly seated under Front Panel Block shaft as shown.

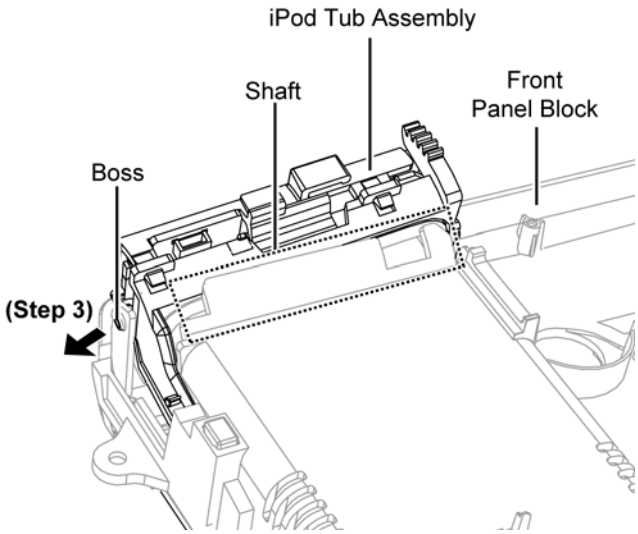

Step 4 : Slighly push the iPod Tub Assembly outward and insert iPod Tub Assembly boss into Front Panel Block hole as picture shown.

Caution : During assembling, ensure iPod Tub Assembly fix into the Rib as shown.

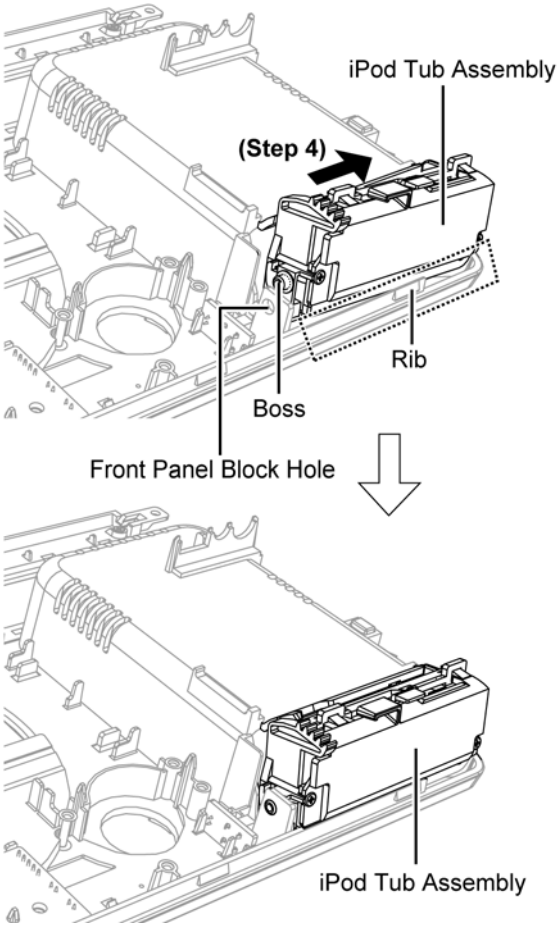

8.14. Disassembly of Mini Side Lock

- Refer to “Disassembly of Stand Assembly”
- Refer to “Disassembly of Door Assembly”
- Refer to “Disassembly of Net Frame Assembly”
- Refer to “Disassembly of Front Panel Block”
- Refer to “Disassembly of Gear Box Assembly”
- Refer to “Disassembly of iPod Tub Assembly”

Step 1 : Press the Mini Side lock to release Catch.

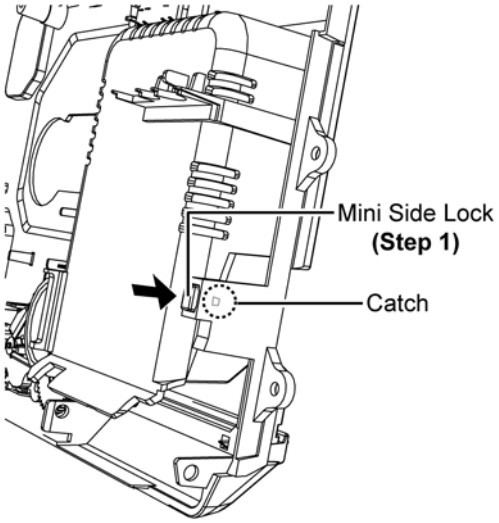

Step 2 : Remove Mini Side Lock.

Caution : During assembling, ensure a “click” sound is heard when the Mini Side Lock is fully catched.

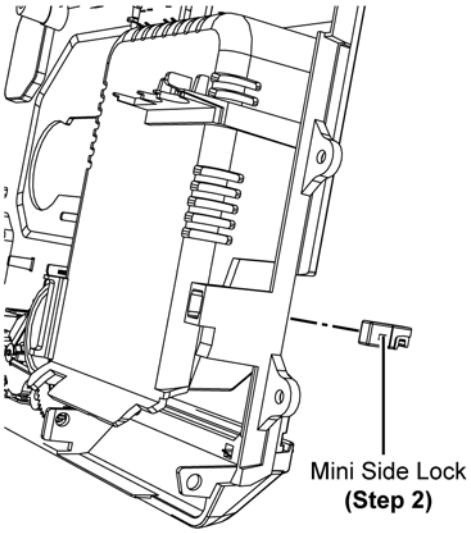

8.15. Disassembly of iPhone P.C.B.

- Refer to “Disassembly of Stand Assembly”
- Refer to “Disassembly of Door Assembly”
- Refer to “Disassembly of Net Frame Assembly”
- Refer to “Disassembly of Front Panel Block”
- Refer to “Disassembly of Gear Box Assembly”
- Refer to “Disassembly of iPod Tub Assembly”

Step 1 : Remove 2 screws.

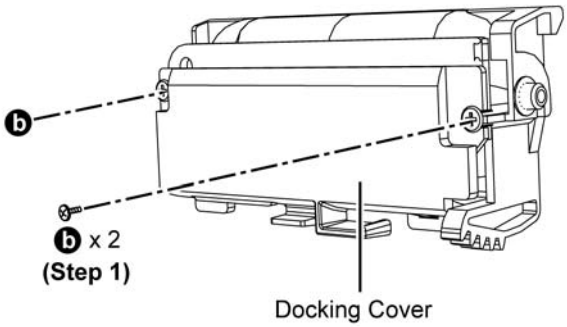

Step 2 : Release 1 catch.

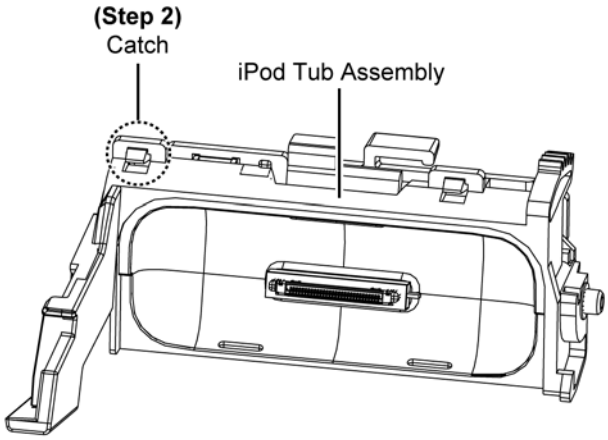

Step 3 : Upset the iPod Tub Assembly.
Step 4 : Press to release the Guide.

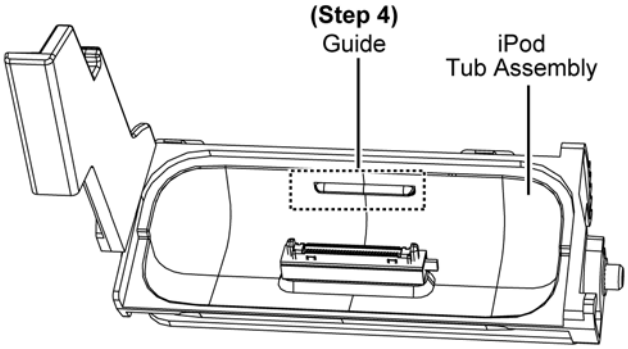

Step 5 : Upset the iPod Tub Assembly.
Step 6 : Release 1 catch.
Caution : During assembling, ensure the Docking Cover is fully catched.

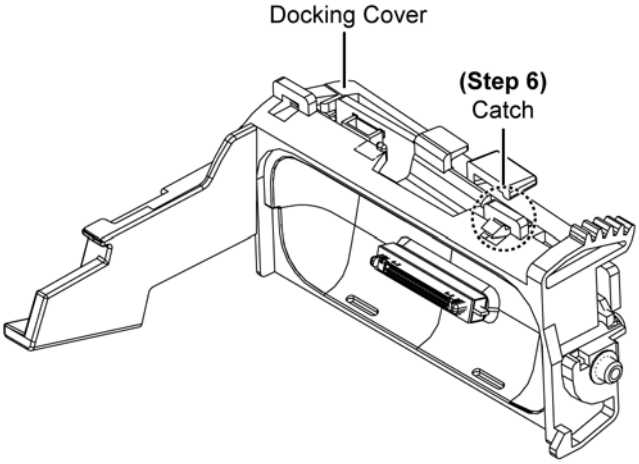

Step 7 : Remove Docking Cover.

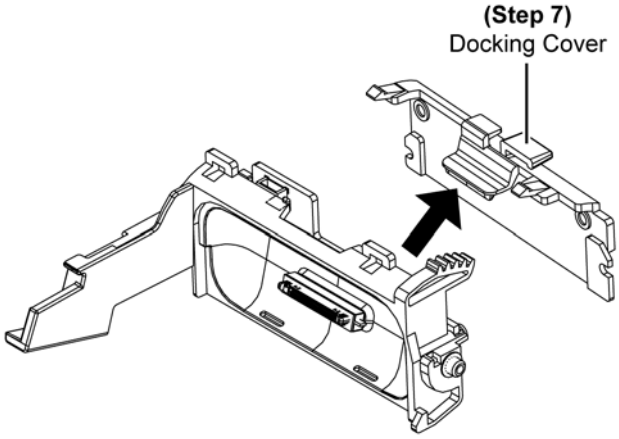

Step 8 : Remove iPhone P.C.B..

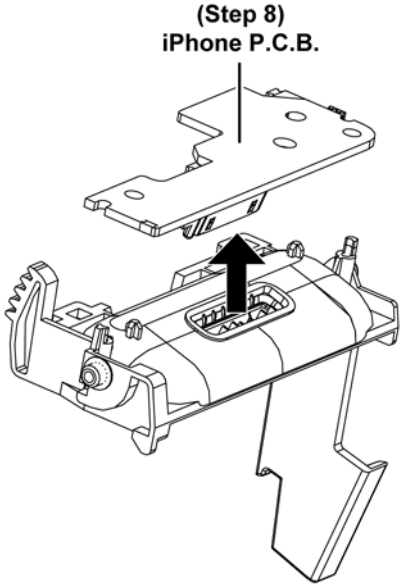

Caution : During assembling, ensure the iPhone P.C.B. is seated properly on the locator.

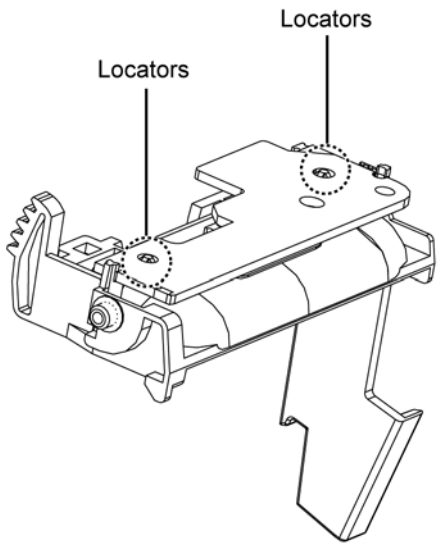

8.16. Disassembly of Top Guide Reel

- Refer to “Disassembly of Stand Assembly”
- Refer to “Disassembly of Door Assembly”
- Refer to “Disassembly of Net Frame Assembly”
- Refer to “Disassembly of Front Panel Block”

Step 1 : Remove 4 screws.

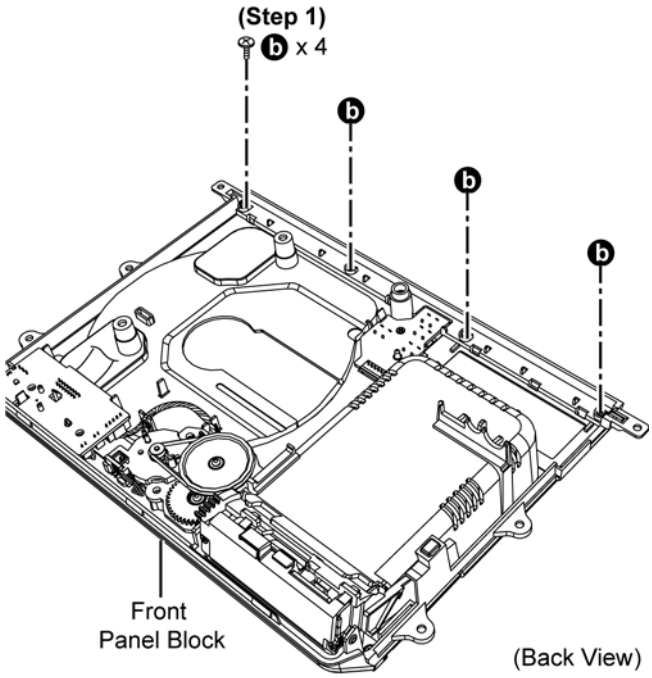

Step 2 : Upset the Front Panel Block.
Step 3 : Remove Top Guide Reel as arrow shown.

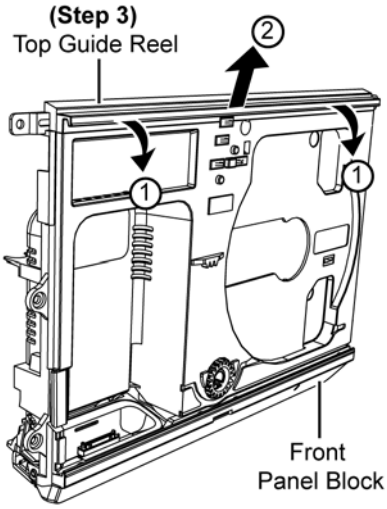

Caution : During assembling, ensure the Top Guide Reel guides are seated properly on the Front Panel Block.

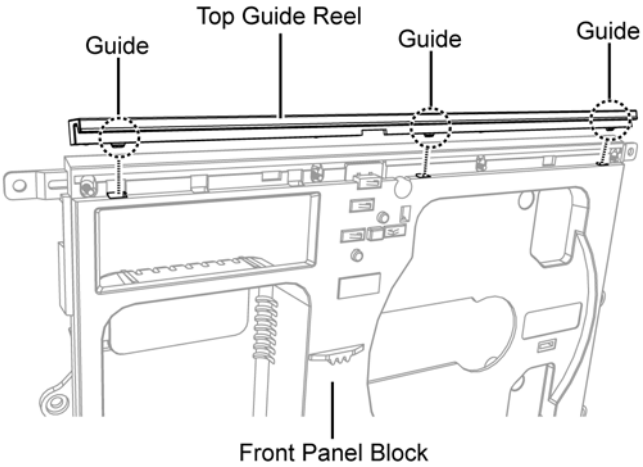

8.17. Disassembly of Bottom Guide Reel

- Refer to “Disassembly of Stand Assembly”
- Refer to “Disassembly of Door Assembly”
- Refer to “Disassembly of Net Frame Assembly”
- Refer to “Disassembly of Front Panel Block”
- Refer to “Disassembly of Gear Box Assembly”
- Refer to “Disassembly of Remote Sensor P.C.B. & iPod Open Switch P.C.B.”
- Refer to “Disassembly of iPod Tub Assembly”

Step 1 : Remove 4 screws.

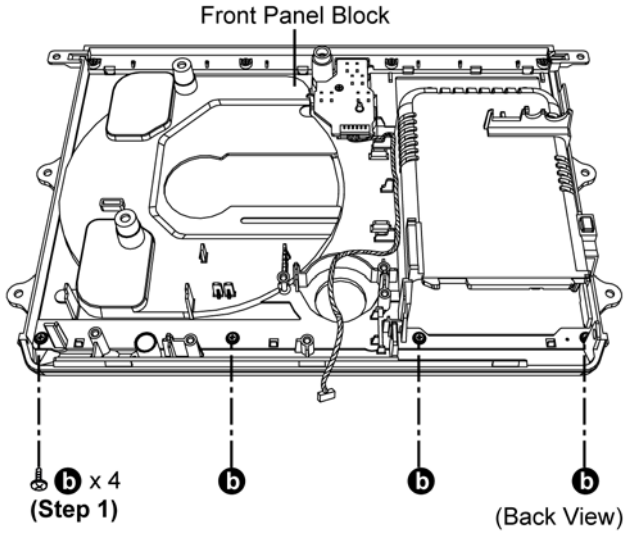

Step 2 : Hold on to the Bottom Guide Reel from bottom side when release 3 catches.

Caution : During assembling, ensure the Bottom Guide Reel is fully catched

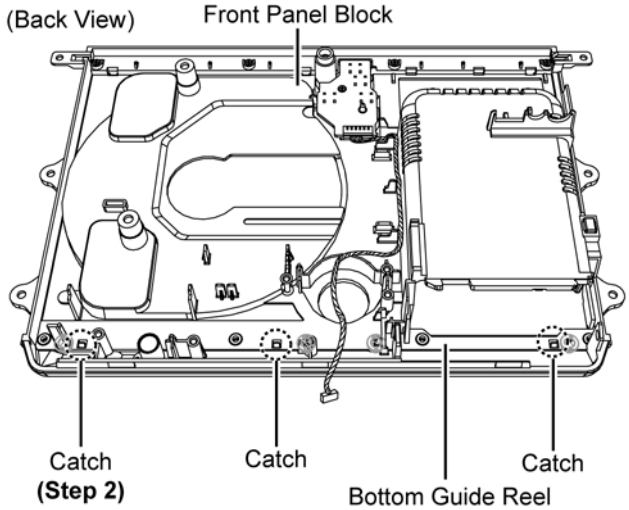

Step 3 : Upset the Front Panel Block.
Step 4 : Remove Bottom Guide Reel.

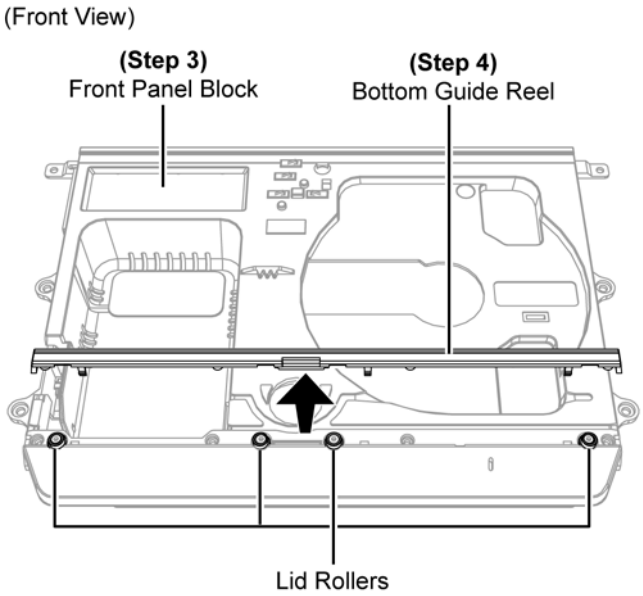

Step 5 : Remove 4 Lid Rollers.

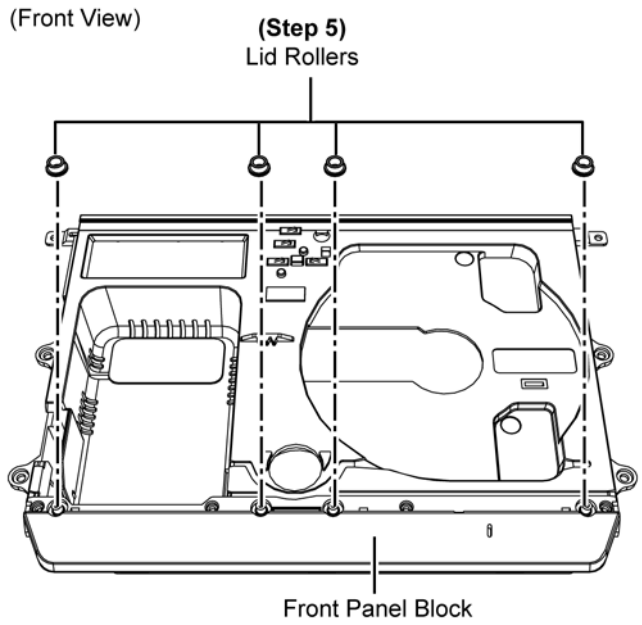

Caution : During assembling, ensure the Lid Rollers is fixed as diagram shown.

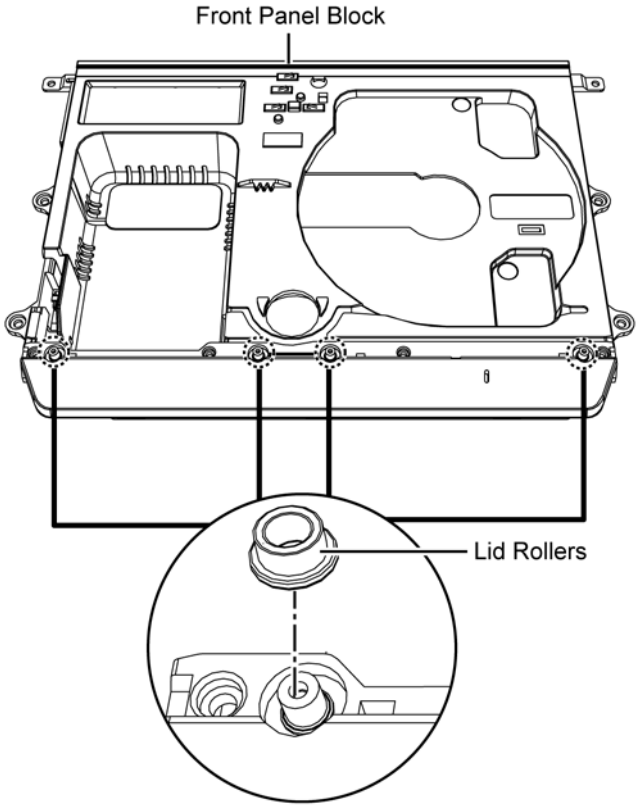

8.18. Disassembly of Top Ornament Assembly

- Refer to “Disassembly of Stand Assembly”
- Refer to “Disassembly of Door Assembly”
- Refer to “Disassembly of Net Frame Assembly”
- Refer to “Disassembly of Front Panel Block”

Step 1 : Detach 12P FFC at the connector (CN901) on the Main P.C.B..

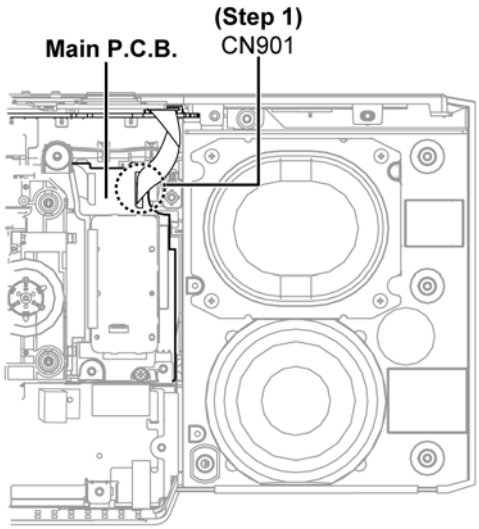

Step 2 : Remove 2 screws.

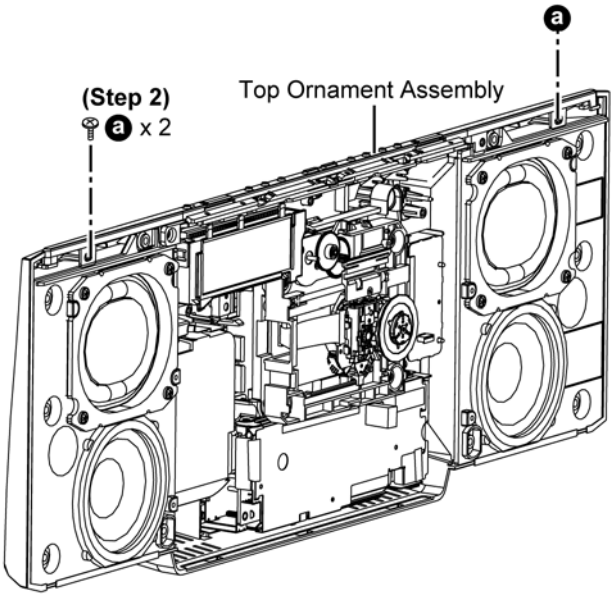

Step 3 : Remove Top Ornament Assembly as arrow shown.

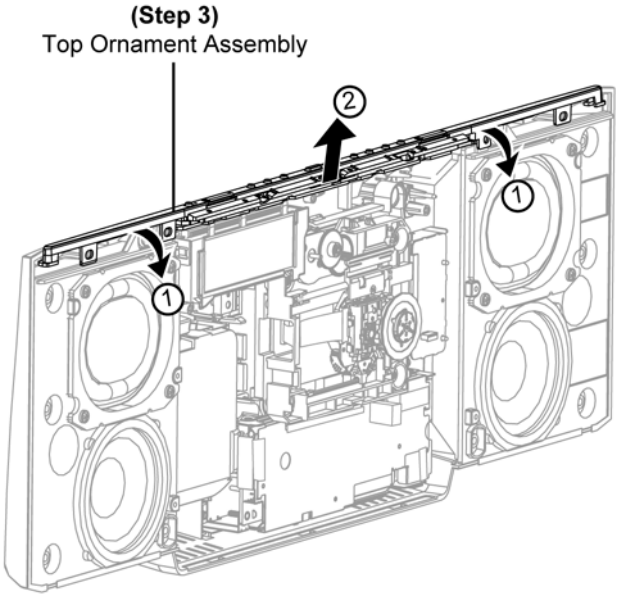

Caution : During assembling, ensure the Top Ornament Assembly is fully catched onto Rear Cabinet Assembly.

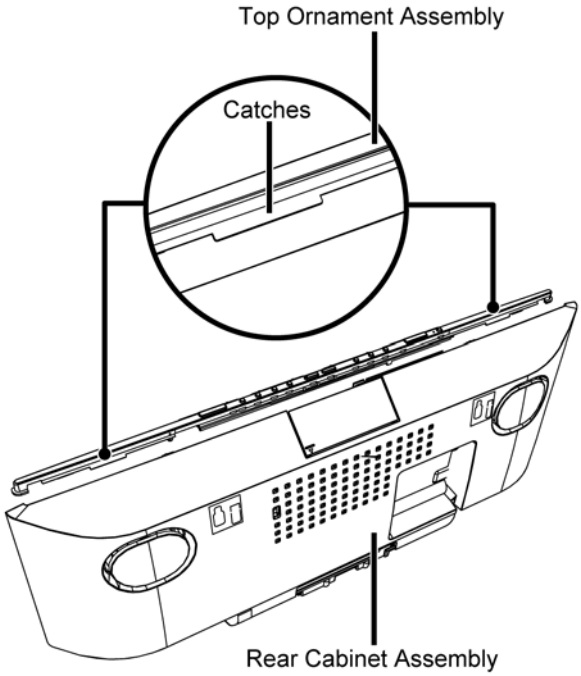

8.19. Disassembly of Button P.C.B.

- Refer to “Disassembly of Stand Assembly”
- Refer to “Disassembly of Door Assembly”
- Refer to “Disassembly of Net Frame Assembly”
- Refer to “Disassembly of Front Panel Block”
- Refer to “Disassembly of Top Ornament Assembly”

Step 1 : Remove 4 screws.

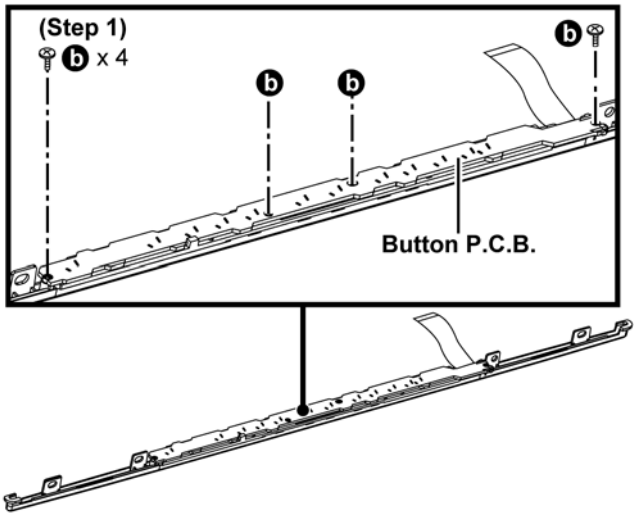

Step 2 : Lift up Button P.C.B. from right to left.

Caution: During assembling, ensure the Button P.C.B. is properly seated below rib.

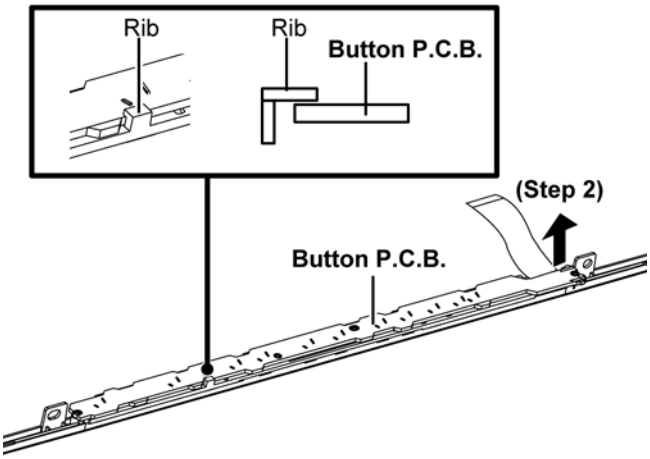

Step 3 : Remove Button P.C.B..

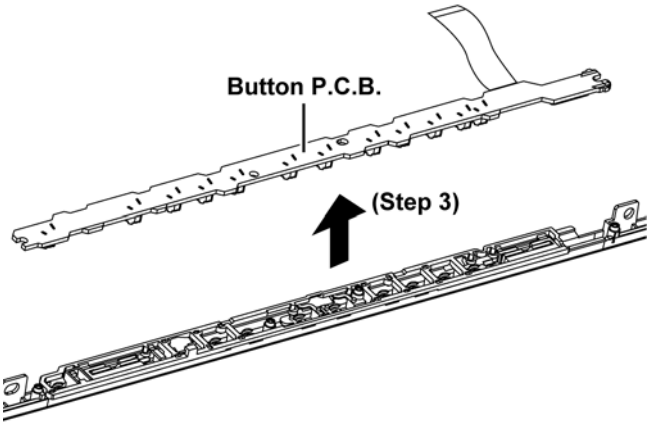

Caution: During assembling, ensure the Button P.C.B. is fully fix follow the guide and slot into rib by sequence from 1 to 5.

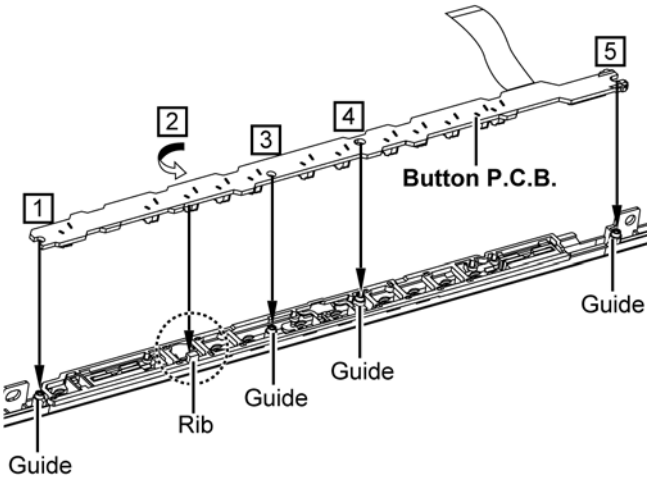

Caution: During assembling, ensure fix the screw to the Button P.C.B. follow by sequence from 1 to 4.

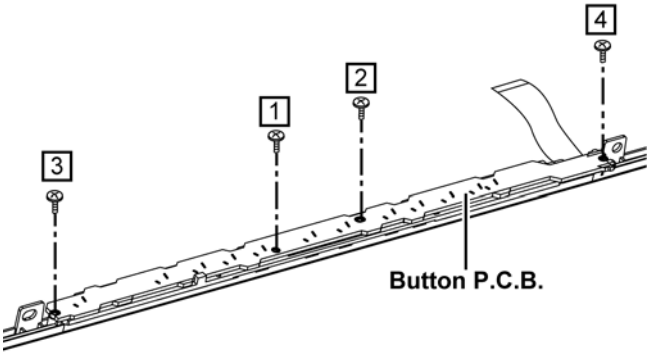

8.20. Disassembly of Top Button & Power Light Piece

- Refer to “Disassembly of Button P.C.B.”

8.20.1. Disassembly of Top Button

Step 1 : Lift up the Top Button from right to left.

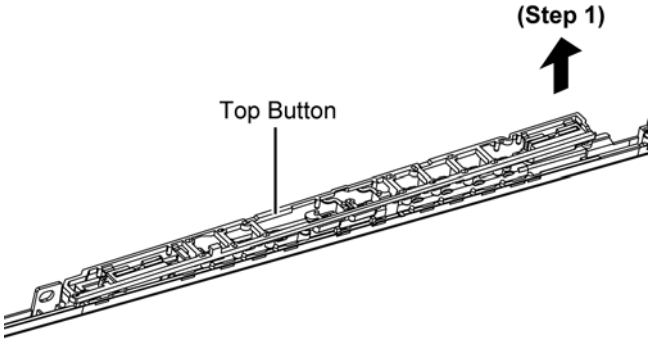

Step 2 : Remove Top Button.

Caution : During assembling, ensure the holes are aligned to their respective guides on the Top Ornament as shown.

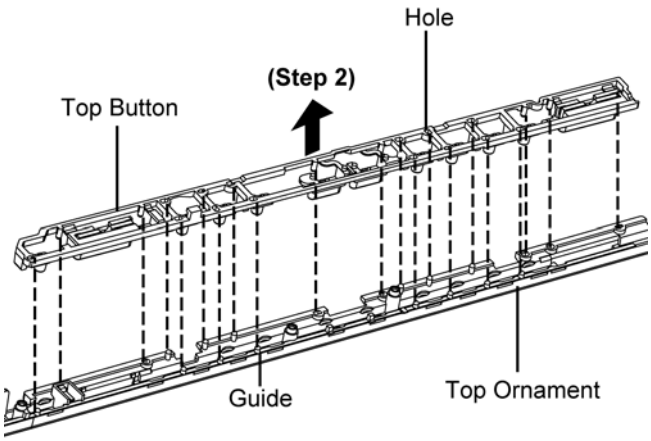

8.20.2. Disassembly of Power Light Piece

- Refer to “Disassembly of Top Button”

Step 1 : Use a Tweezers to remove the Power Light Piece from Top Ornament.

Caution: During assembling of Power Light Piece, ensure the Power Light Piece is properly seated on the guide.

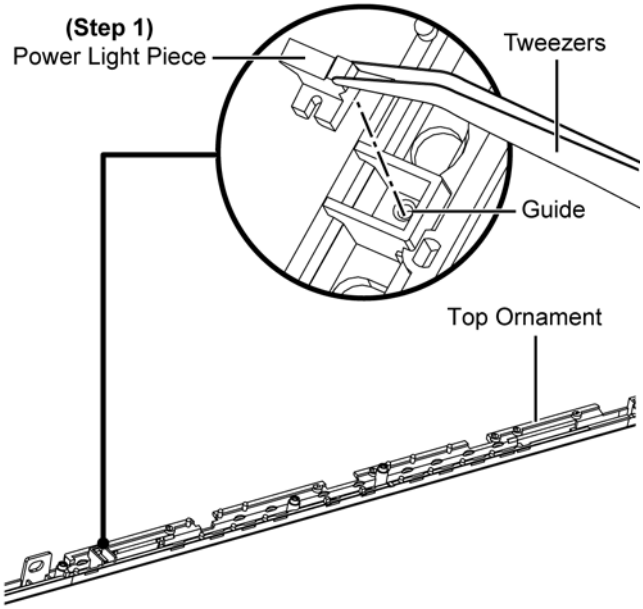

8.21. Disassembly of Bluetooth P.C.B.

- Refer to “Disassembly of Stand Assembly”
- Refer to “Disassembly of Door Assembly”
- Refer to “Disassembly of Net Frame Assembly”
- Refer to “Disassembly of Front Panel Block”

Step 1 : Remove 1 screw.

Step 2 : Flip up Bluetooth P.C.B..

Caution : During assembling, ensure the Bluetooth P.C.B. is seated properly on the Locators.

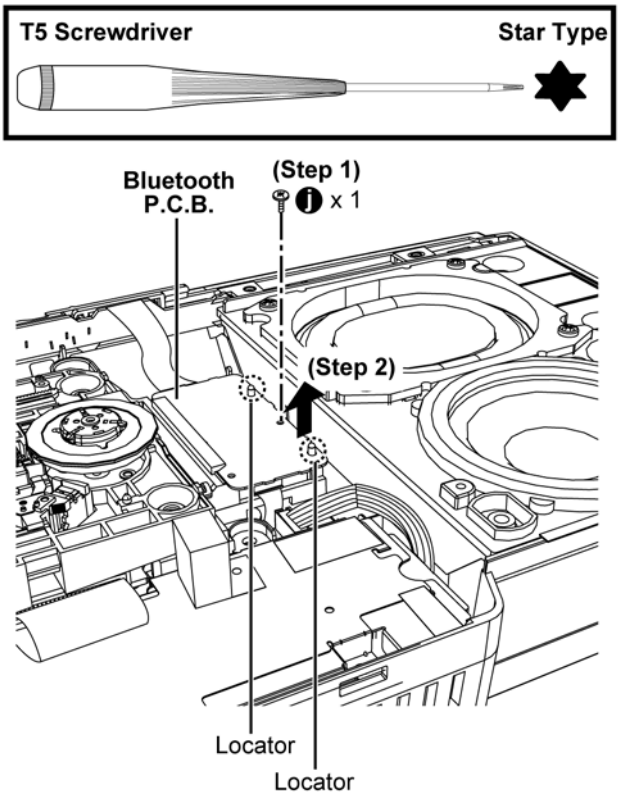

Step 3 : Slide out the Bluetooth P.C.B..

Caution : During assembling, ensure the Bluetooth P.C.B. is seated properly on the Guide .

Step 4 : Upset the Bluetooth P.C.B..

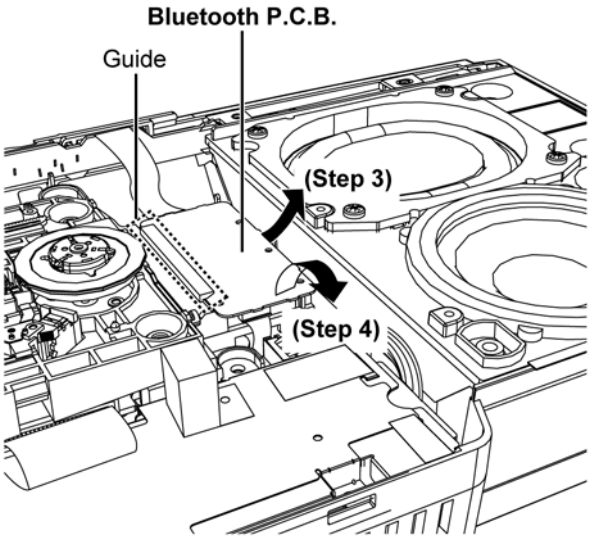

Step 5 : Detach 6P FFC at the connector (CN901) on the Bluetooth P.C.B..

Step 6 : Remove Bluetooth P.C.B..

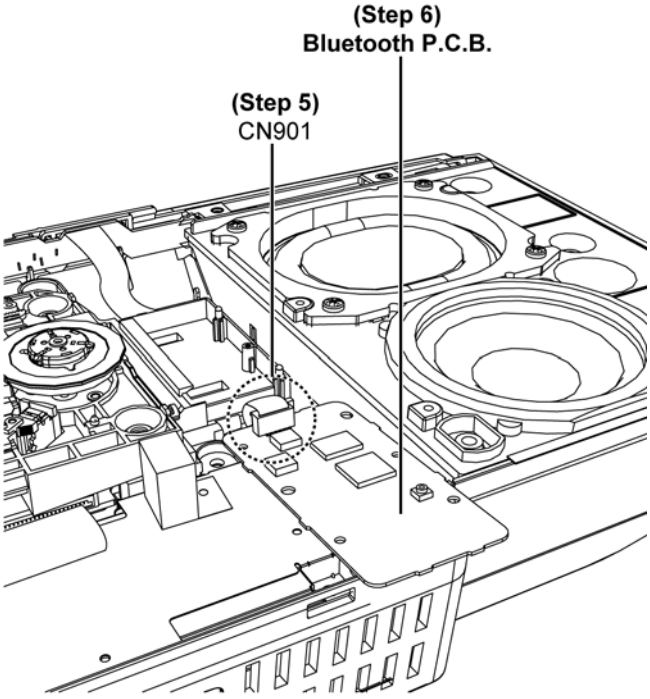

8.22. Disassembly of Panel P.C.B.

- Refer to “Disassembly of Stand Assembly”
- Refer to “Disassembly of Door Assembly”
- Refer to “Disassembly of Net Frame Assembly”
- Refer to “Disassembly of Front Panel Block”

Step 1 : Detach 9P FFC at the connector (CN6801) on the Panel P.C.B..
Step 2 : Remove 2 screw and Ground Wire.

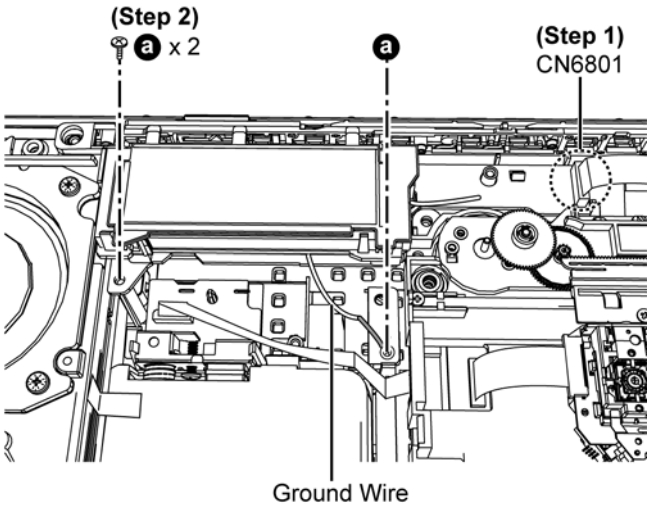

Step 3 : Release 1 catch.

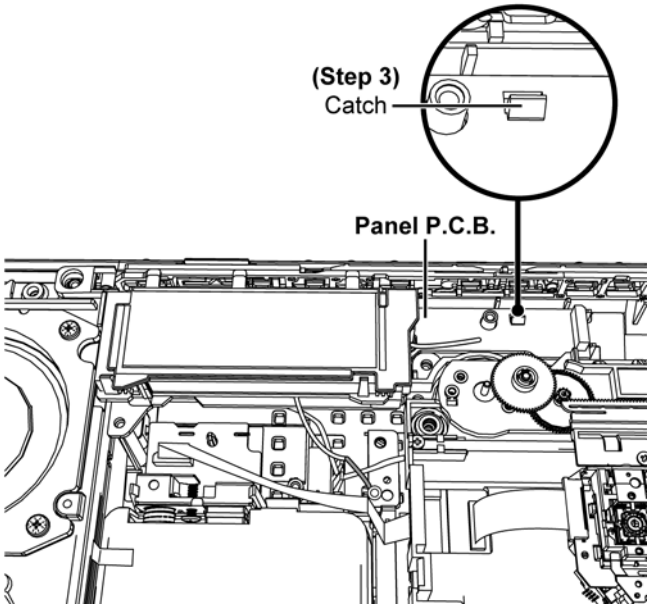

Step 4 : Remove Panel P.C.B..
Caution : During assembling, ensure the Panel P.C.B. is seated properly on the locator and catch.

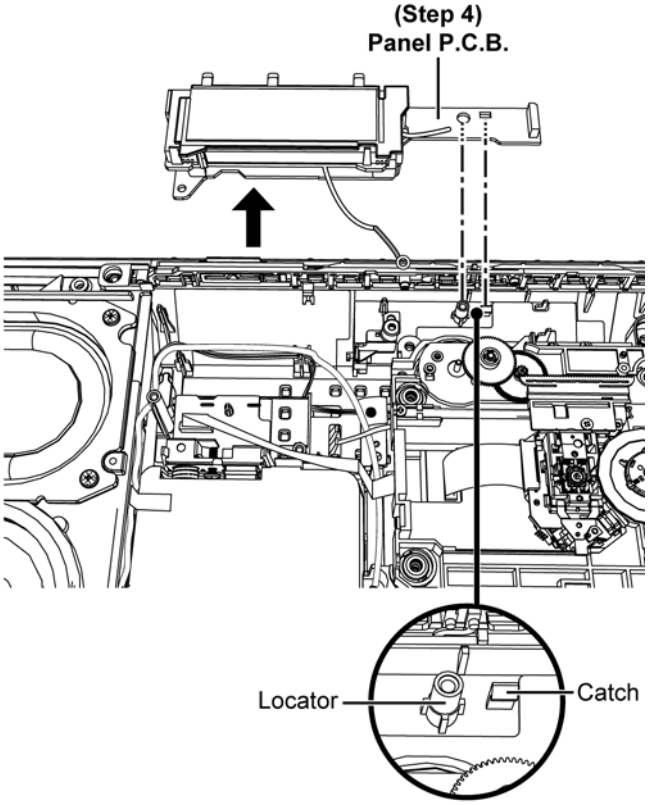

8.23. Disassembly of Jack Lid

- Refer to “Disassembly of Stand Assembly”
- Refer to “Disassembly of Door Assembly”
- Refer to “Disassembly of Net Frame Assembly”
- Refer to “Disassembly of Front Panel Block”
- Refer to “Disassembly of Panel P.C.B.”

Step 1 : Release the Lid Spring.

Caution : Keep the Lid Spring in safe place and place them back during assembling.

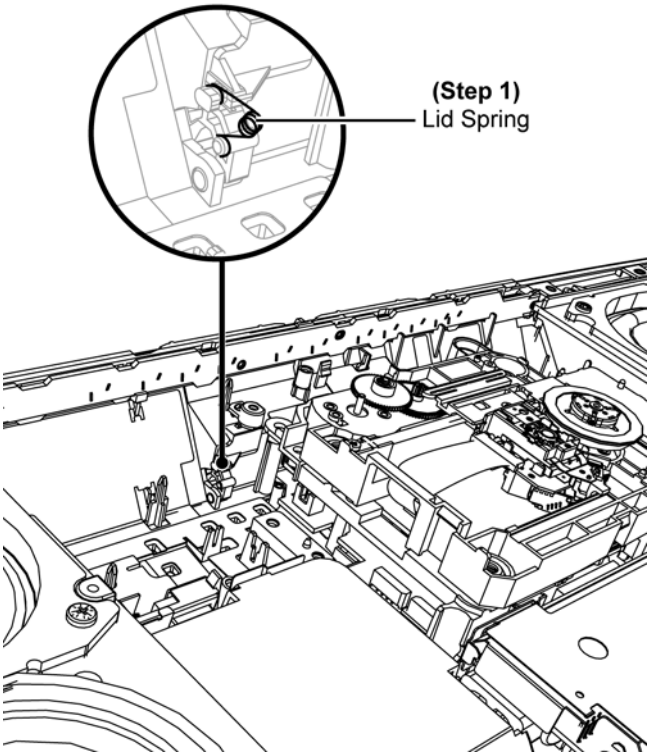

Step 2 : Press to open the Jack Lid.

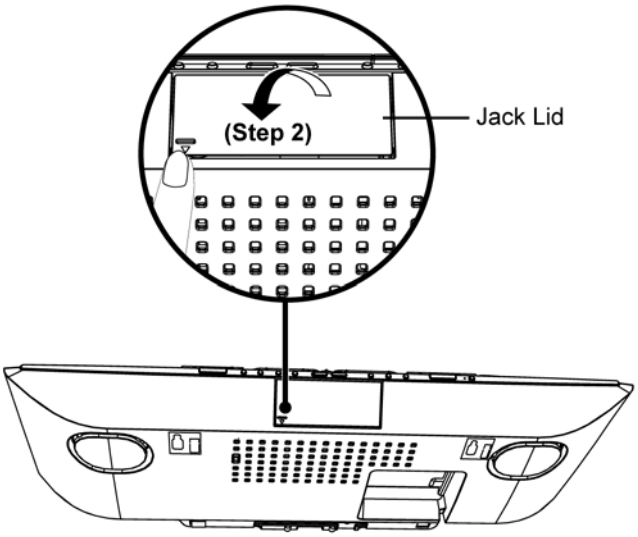

Step 3 : Push inward the shaft of the Jack Lid in the direction as shown.

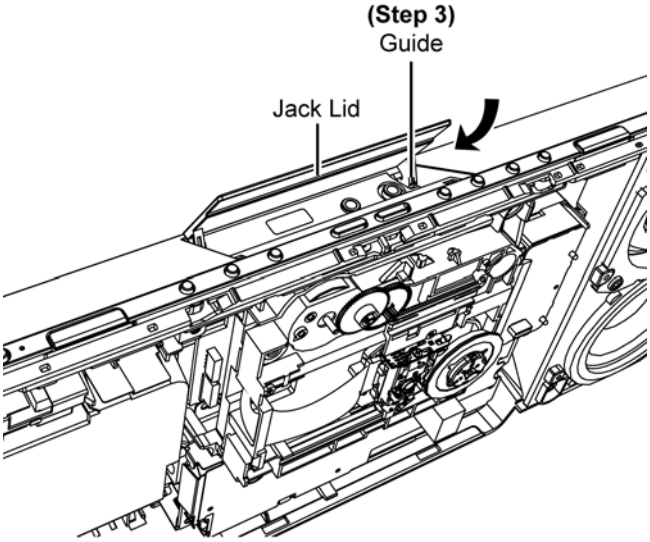

Step 4 : Remove Jack Lid in the direction as shown.

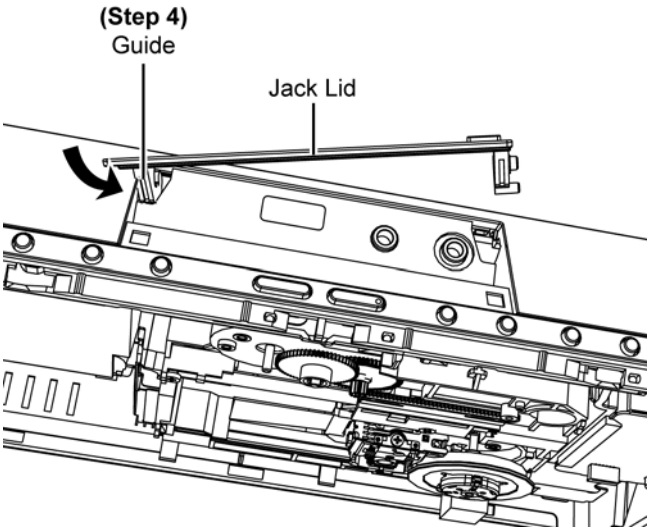

Caution : During assembling, ensure the Jack Lid is properly slot into the hole of the Rear Cabinet Assembly.

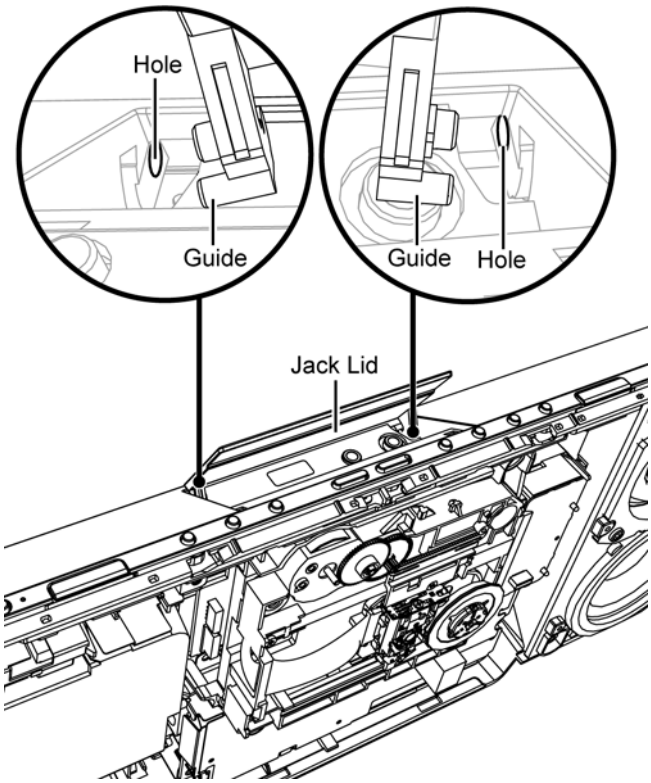

8.24. Disassembly of Tuner P.C.B.

- Refer to “Disassembly of Stand Assembly”
- Refer to “Disassembly of Door Assembly”
- Refer to “Disassembly of Net Frame Assembly”
- Refer to “Disassembly of Front Panel Block”
- Refer to “Disassembly of Panel P.C.B.”

Step 1 : Remove 1 screw.

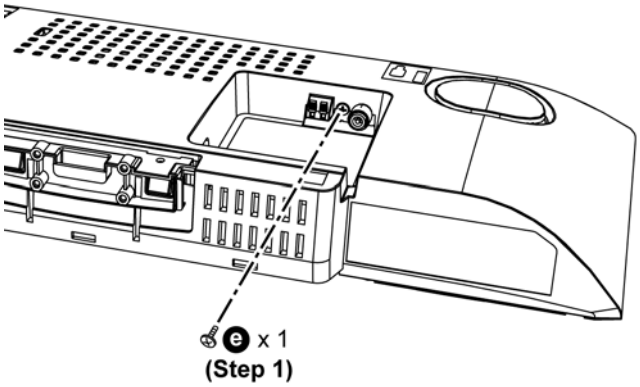

Step 2 : Detach 9P FFC at the connector (CN51) on the Tuner P.C.B..

Step 3 : Lift up the Himelon to release the Tuner P.C.B..

Caution : Replace the Himelons if they are torn during disassembling.

Step 4 : Release 2 catches.

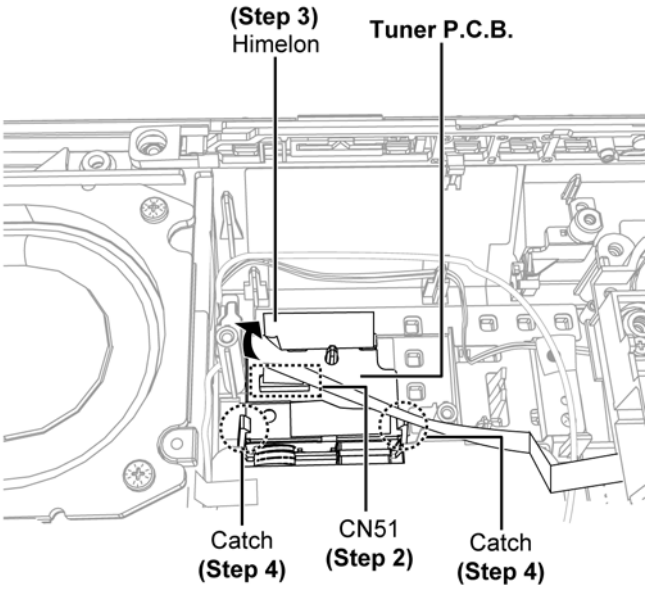

Step 5 : Remove Tuner P.C.B..

Caution : During assembling, ensure the Tuner P.C.B. is seated properly on the locator and catch.

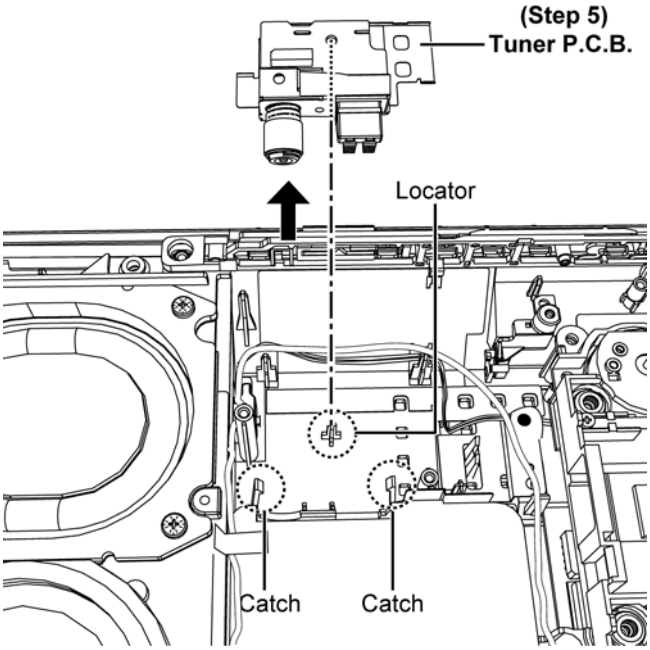

8.25. Disassembly of CD Mechanism

- Refer to “Disassembly of Stand Assembly”
- Refer to “Disassembly of Door Assembly”
- Refer to “Disassembly of Net Frame Assembly”
- Refer to “Disassembly of Front Panel Block”
- Refer to “Disassembly of Panel P.C.B.”

Step 1 : Remove 2 screws.

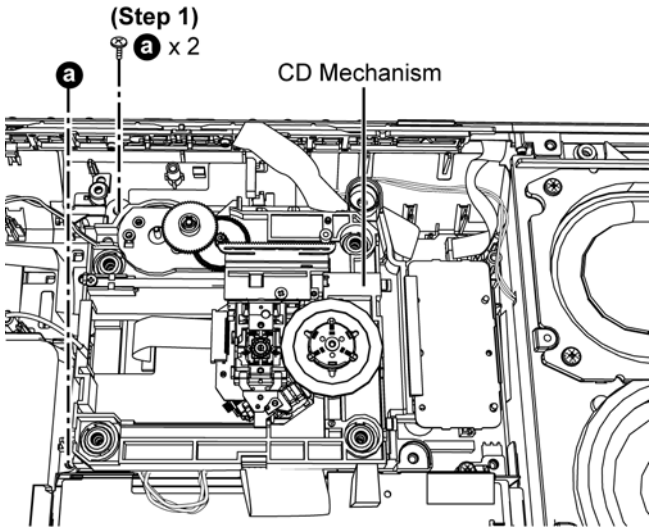

Step 2 : Lift up the CD Mechanism from the back as arrow shown.

Step 3 : Detach 12P FFC at the connector (CN302) on the Main P.C.B..

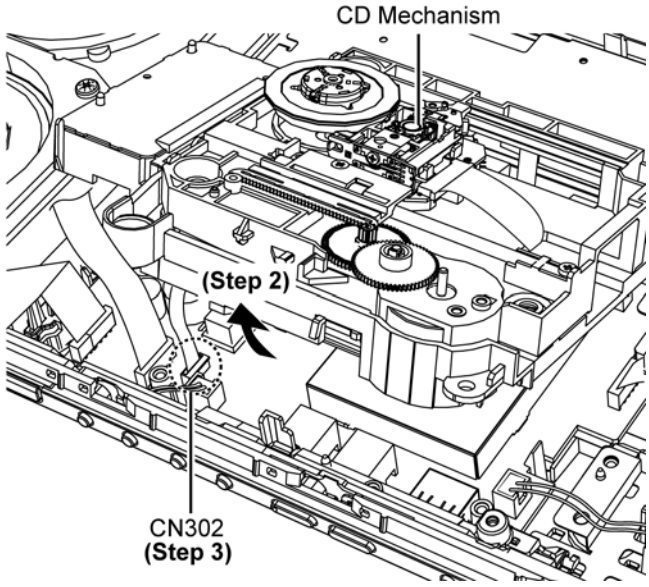

Step 4 : Upset the CD Mechanism.

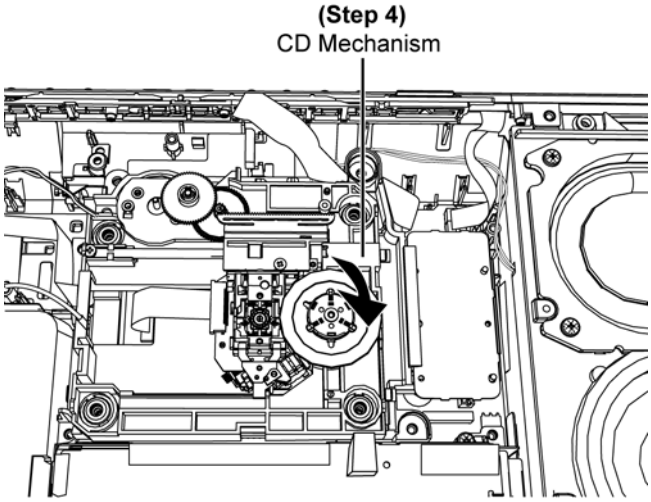

Step 5 : Place the CD Mechanism on the Insulating Material.

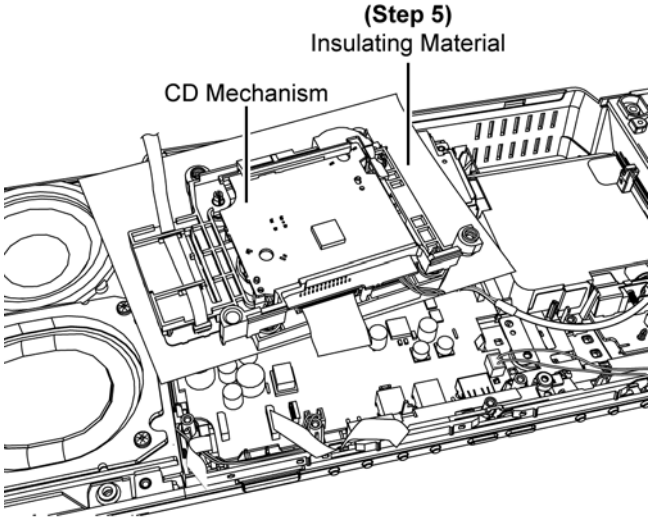

Step 6 : Detach 27P FFC at the connector (CN7002) on the CD Servo P.C.B..
Step 7 : Detach 5P wire at the connector (CN7901) on the CD Servo P.C.B..
Step 8 : Remove CD Mechanism.

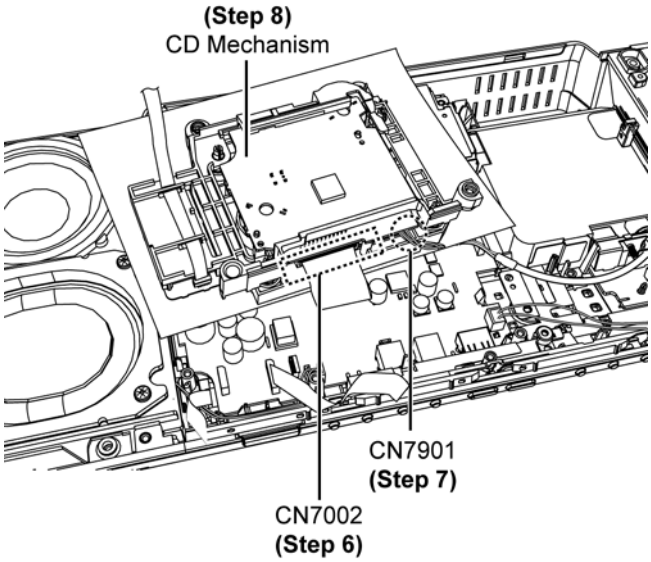

Caution : During assembling, ensure that the 27P FFC & 5P Wire is dressed as shown.

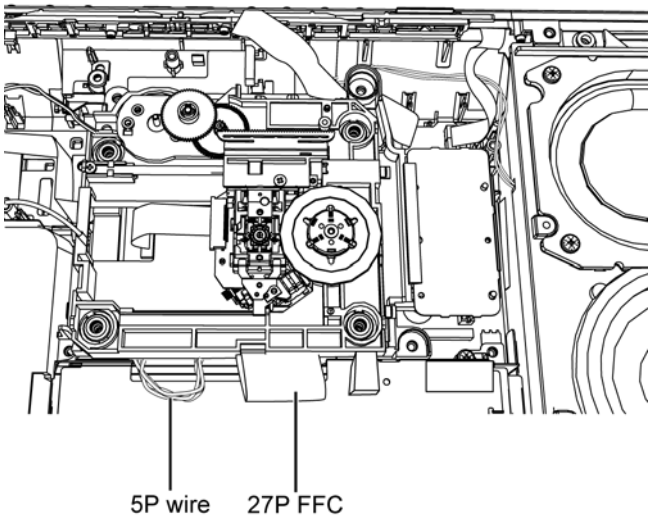

8.26. Disassembly of CD Servo P.C.B.

- Refer to “Disassembly of CD Mechanism”

Step 1 : Release both catches and push down the fixed pin as arrow shown.

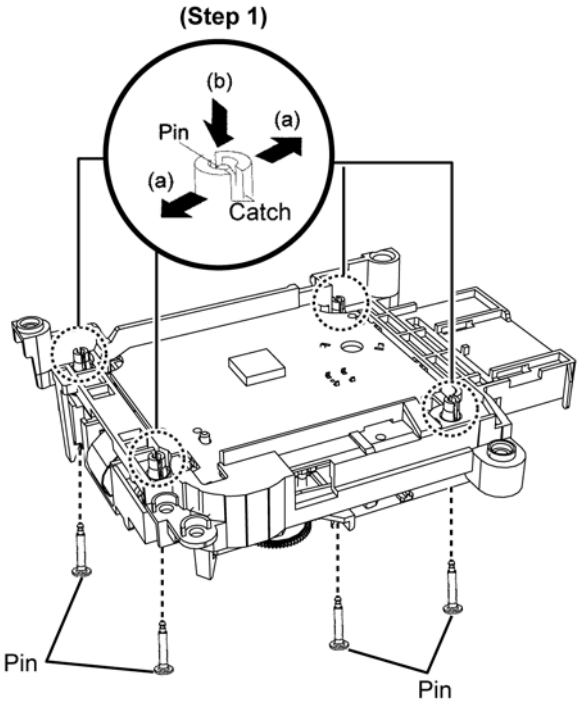

Step 2 : Lift up the Mecha Chassis to remove Traverse Deck.

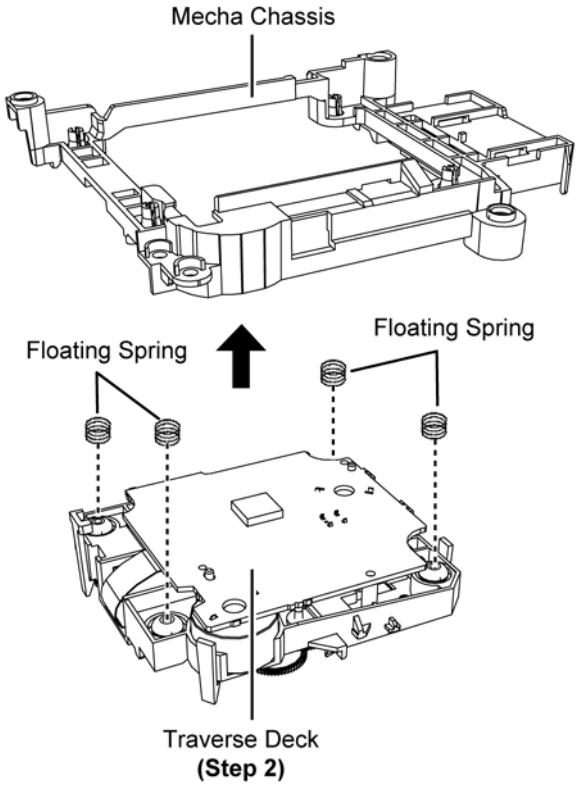

Step 3 : Remove 3 screws.

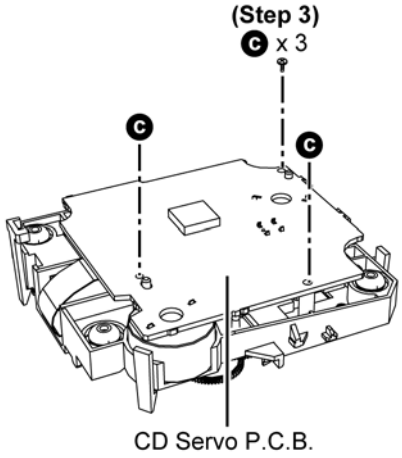

Step 4 : Desolder pins on the solder side of CD Servo P.C.B..

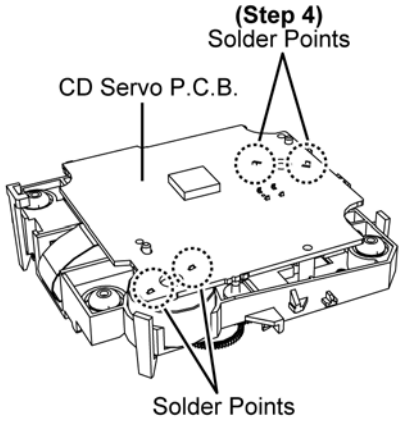

Step 5 : Flip over the CD Servo P.C.B..
Step 6 : Detach 24P FFC at the connector (CN7001) from the CD Servo P.C.B..

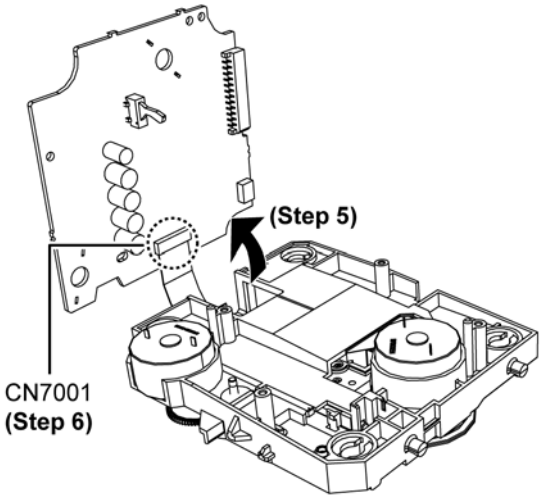

Step 7 : Attach short pin to Traverse Assembly.
Step 8 : Remove the CD Servo P.C.B..

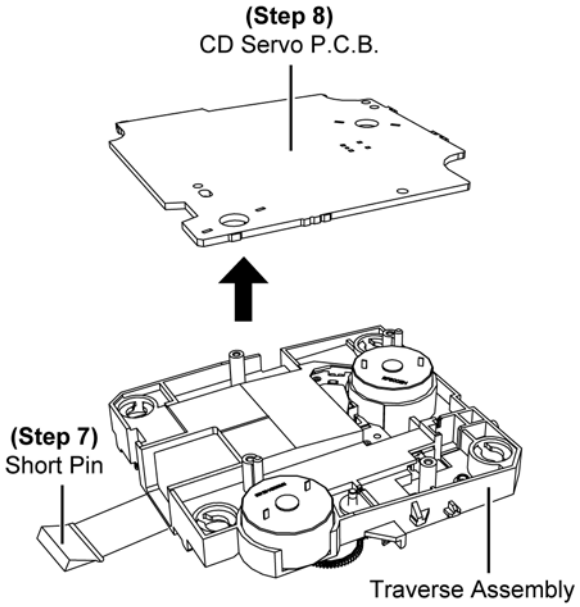

8.27. Disassembly of SMPS P.C.B.

- Refer to “Disassembly of Stand Assembly”
- Refer to “Disassembly of Door Assembly”
- Refer to “Disassembly of Net Frame Assembly”
- Refer to “Disassembly of Front Panel Block”
- Refer to “Disassembly of Panel P.C.B.”
- Refer to “Disassembly of CD Mechanism”

Step 1 : Remove 1 screw.
Step 2 : Remove 1 screw.
Step 3 : Remove Inner Bracket.

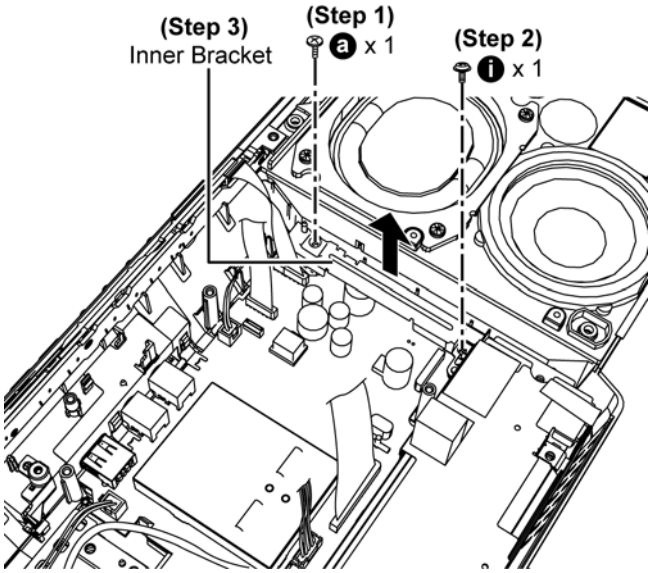

Step 4 : Remove 3 screws.
Step 5 : Lift up SMPS Unit.

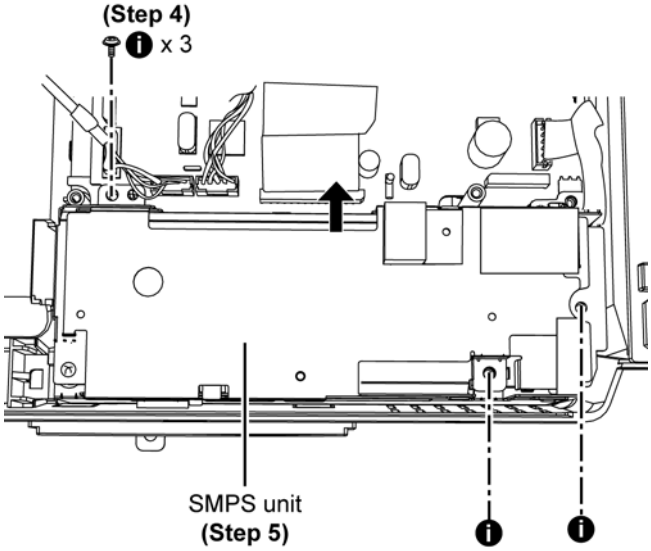

Step 6 : Detach 6P wire at the connector (CN905) on the SMPS P.C.B..

Step 7 : Remove SMPS unit.

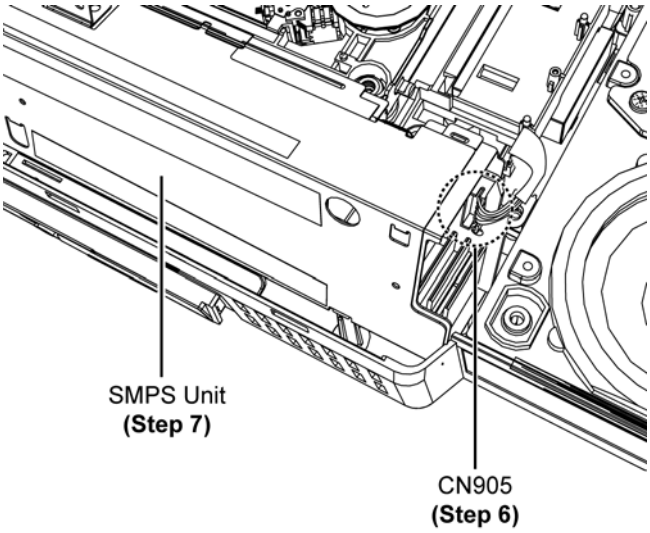

Caution : During assembling SMPS Unit, ensure 6P wire dress properly as shown.

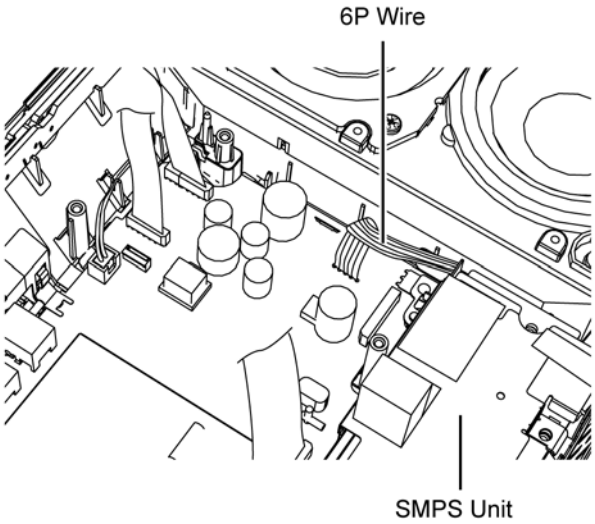

Step 8 : Lift up the Himelons.

Caution : Replace the Himelons if they are torn during disassembling.

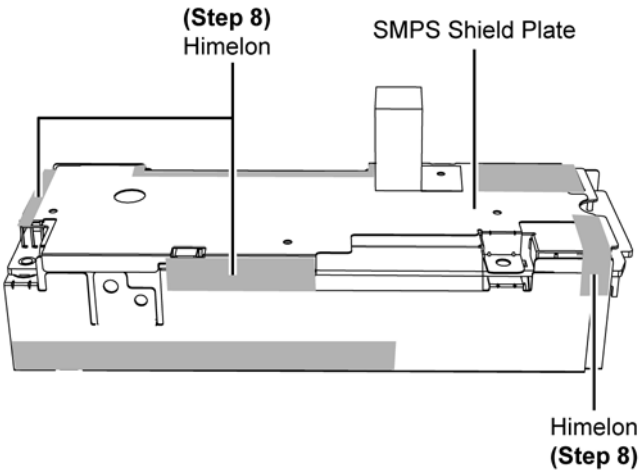

Step 9 : Lift up the Himelons.

Caution : Replace the Himelons if they are torn during disassembling.

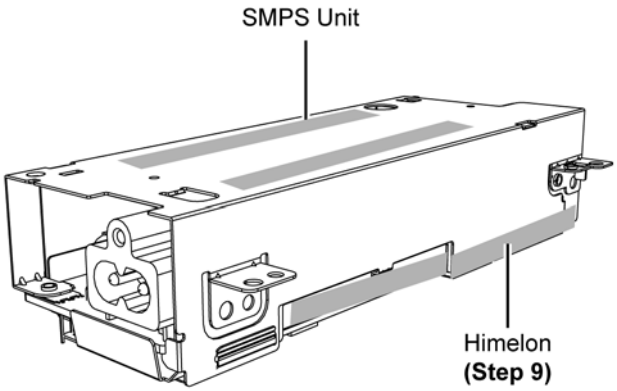

Step 10 : Gently push up the SMPS Shield Plate to release the catches.

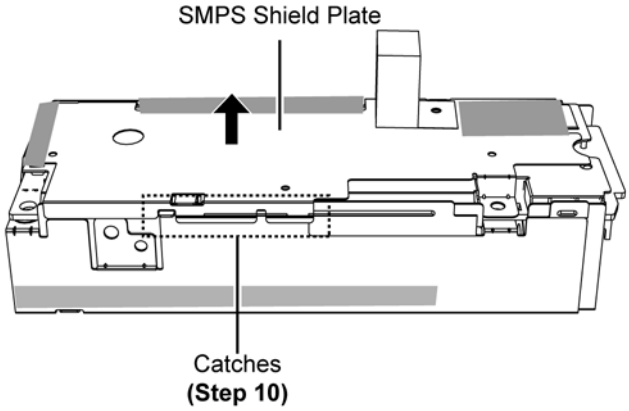

Step 11 : Gently push up the SMPS Shield Plate to release the catches.

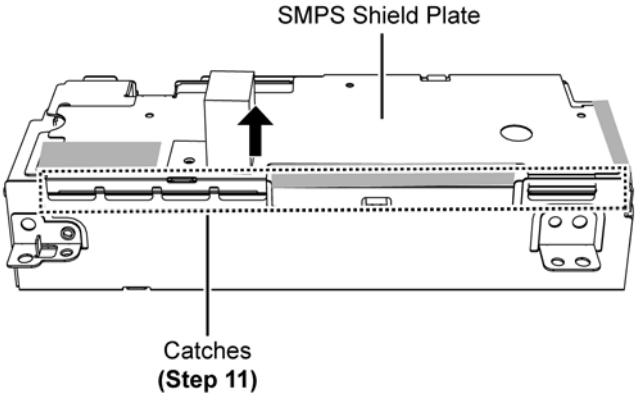

Step 12 : Remove SMPS Shield Plate Assembly.

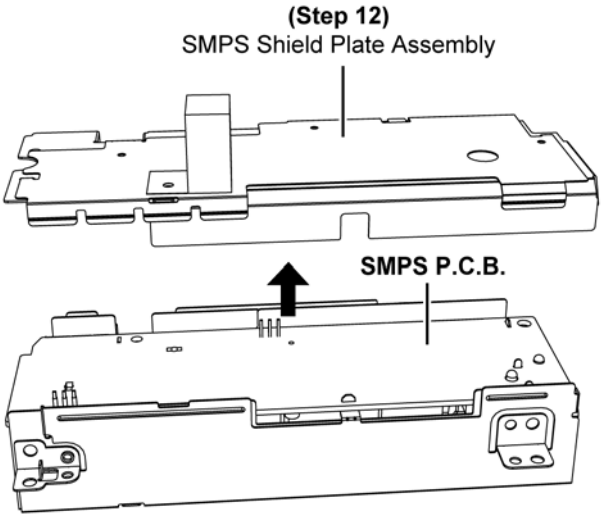

Step 13 : Remove 1 screw.
Step 14 : Remove SMPS P.C.B..

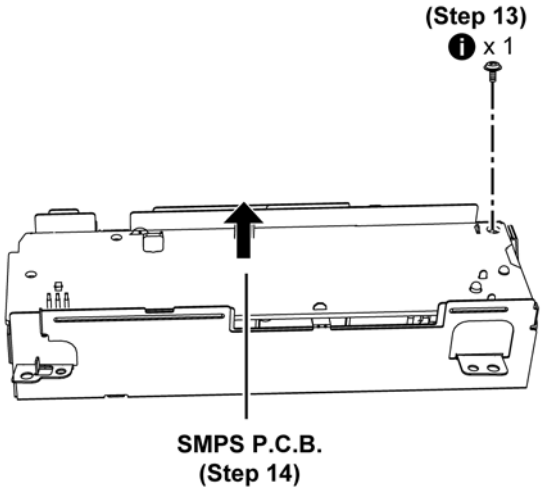

Caution: During assembling of SMPS P.C.B., ensure that the SMPS P.C.B. is properly seated on the locators.

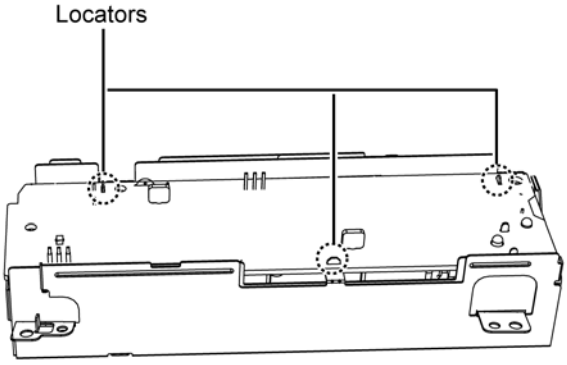

8.28. Replacement of Diode (D702)

- Refer to “Disassembly of SMPS P.C.B.”

8.28.1. Disassembly of Diode (D702)

Caution : Handle the SMPS P.C.B. with care. Avoid touching the heatsink due to high temperature after use.

Step 1 : Desolder pins of the Diode (D702) on the solder side of SMPS P.C.B..

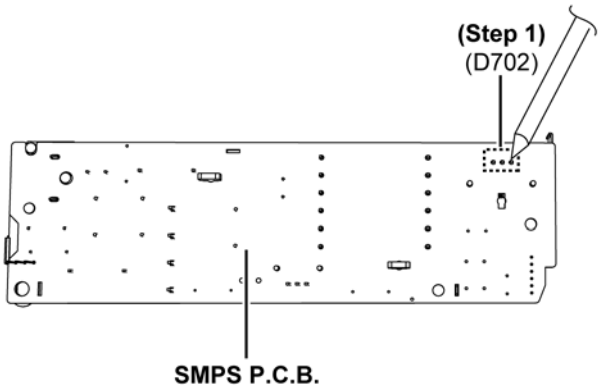

Step 2 : Remove 1 screw.

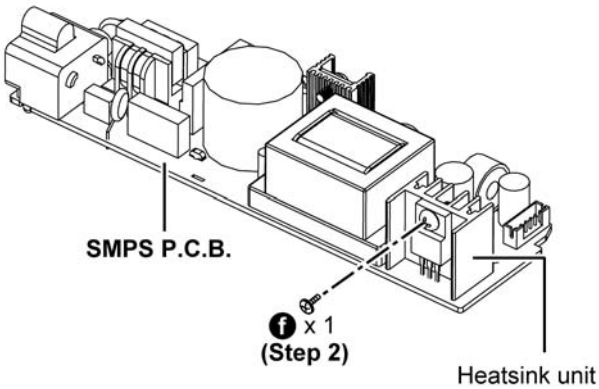

Step 3 : Remove the Diode (D702).

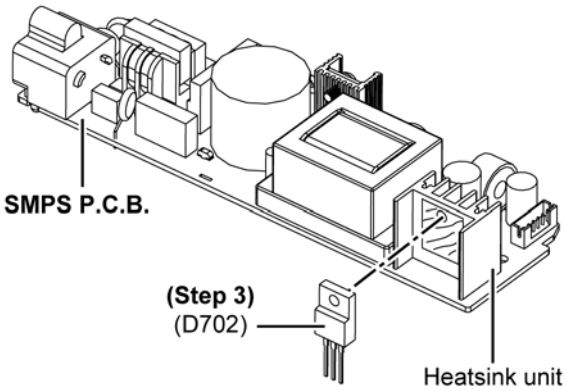

8.28.2. Assembly of Diode (D702)

Step 1 : Apply grease to the heatsink unit.
Step 2 : Fix the Diode (D702) onto SMPS P.C.B..
Step 3 : Fix the Diode (D702) onto the heatsink unit with 1 screws.
Caution : Ensure the Diode (D702) is fixed properly to the heatsink.

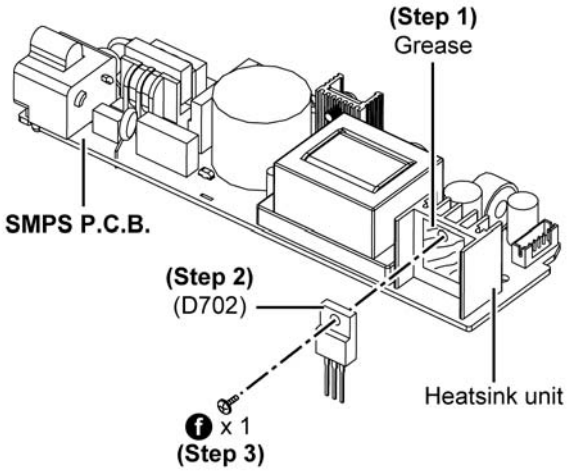

Step 4 : Solder pins of the Diode (D702).
Caution : Ensure the Diode (D702) is seated properly onto the SMPS P.C.B. before soldering.

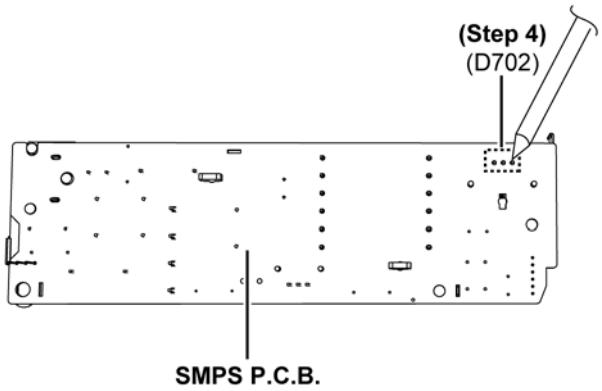

8.29. Replacement of Transistor (Q701)

- Refer to “Disassembly of SMPS P.C.B.”

8.29.1. Disassembly of Transistor (Q701)

Caution : Handle the SMPS P.C.B. with care. Avoid touching the heatsink due to high temperature after use.

Step 1 : Desolder pins of the Transistor (Q701) on the solder side of SMPS P.C.B..

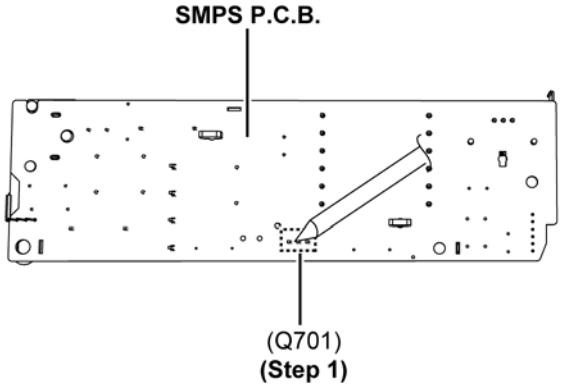

Step 2 : Remove 1 screw.

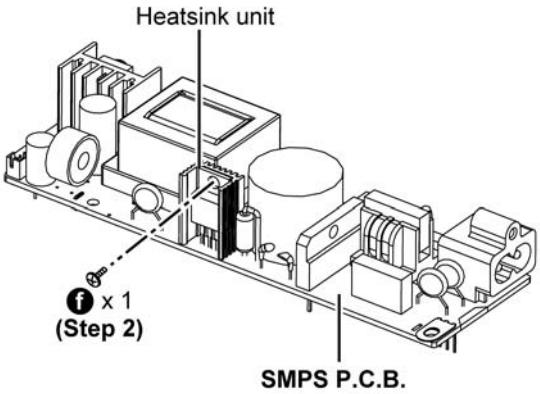

Step 3 : Remove the Transistor (Q701).

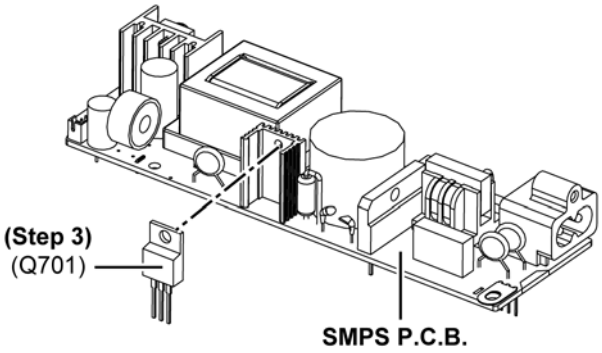

8.29.2. Assembly of Transistor (Q701)

Step 1 : Apply grease to the heatsink unit.
Step 2 : Fix the Transistor (Q701) onto SMPS P.C.B.
Step 3 : Fix the Transistor (Q701) onto the heatsink unit with 1 screws.
Caution : Ensure the Transistor (Q701) is fixed properly to the heatsink.

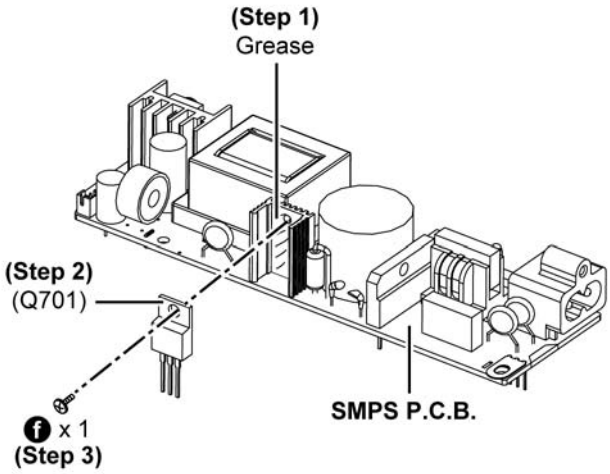

Step 4 : Solder pins of the Transistor (Q701).
Caution : Ensure the Transistor (Q701) is seated properly onto the SMPS P.C.B. before soldering.

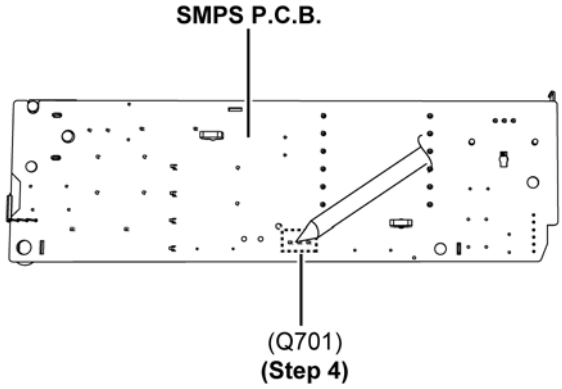

8.30. Disassembly of Passive Radiator (SP6)

- Refer to “Disassembly of Net Frame Assembly (L)”

Step 1 : Remove 4 screws.
Step 2 : Remove Passive Radiator (SP6).

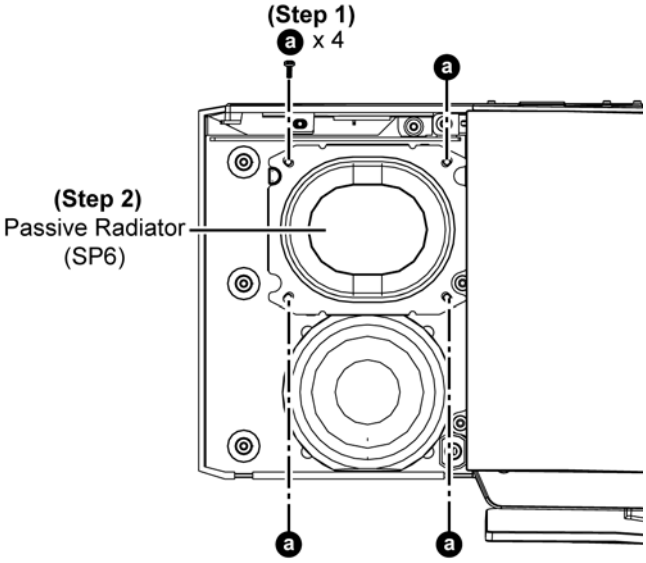

8.31. Disassembly of Passive Radiator (SP5)

- Refer to “Disassembly of Net Frame Assembly (R)”

Step 1 : Remove 4 screws.
Step 2 : Remove Passive Radiator (SP5).

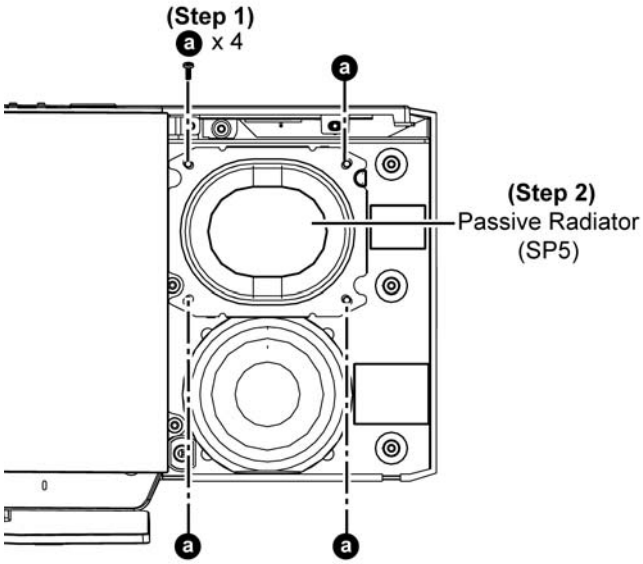

8.32. Disassembly of Front Speaker (SP2)

- Refer to “Disassembly of Stand Assembly”
- Refer to “Disassembly of Door Assembly”
- Refer to “Disassembly of Net Frame Assembly”
- Refer to “Disassembly of Front Panel Block”
- Refer to “Disassembly of Panel P.C.B.”

Step 1 : Remove 5 screws.

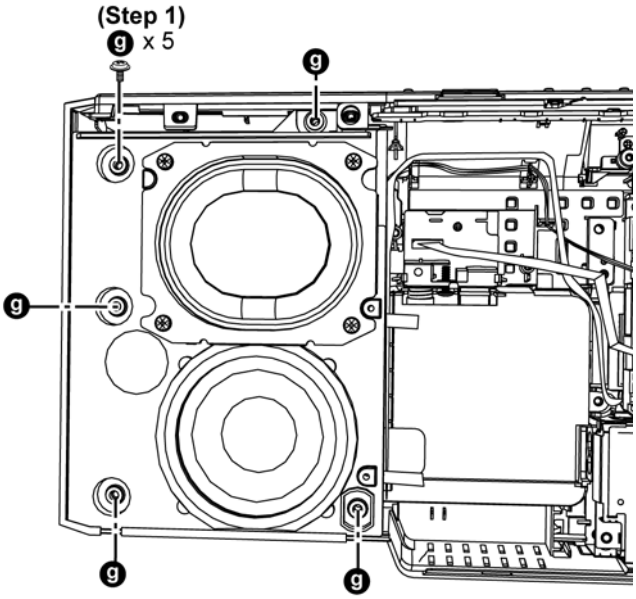

Step 2 : Lift up Himelons at the shaded area.

Caution : Replace the Himelons if they are torn during disassembling.

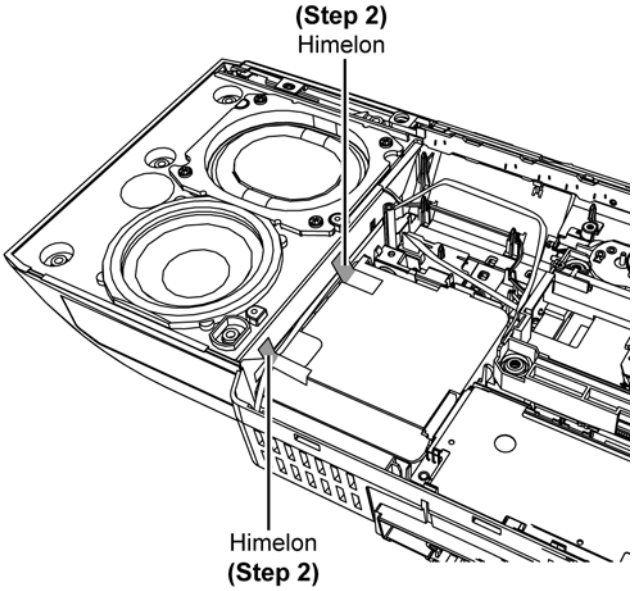

Step 3 : Using a Flathead screwdriver to lift up the Front Speaker Assembly (L).

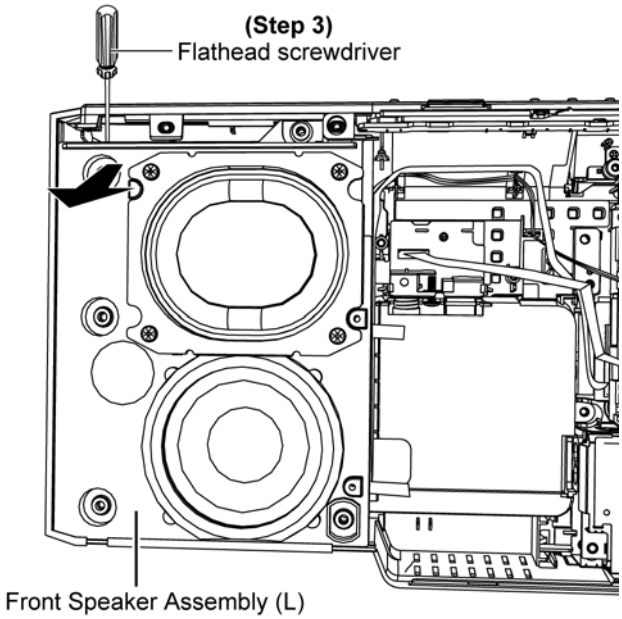

Step 4 : Desolder the red (+) wire and black (-) wire at the terminals of Front Speaker (SP2).

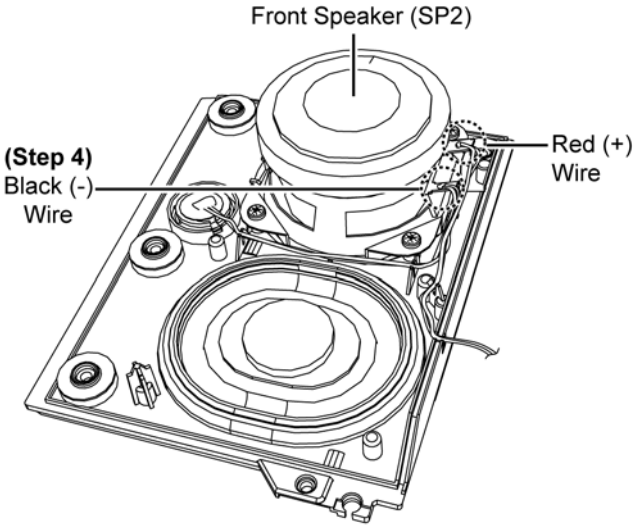

Step 5 : Remove 4 screws.

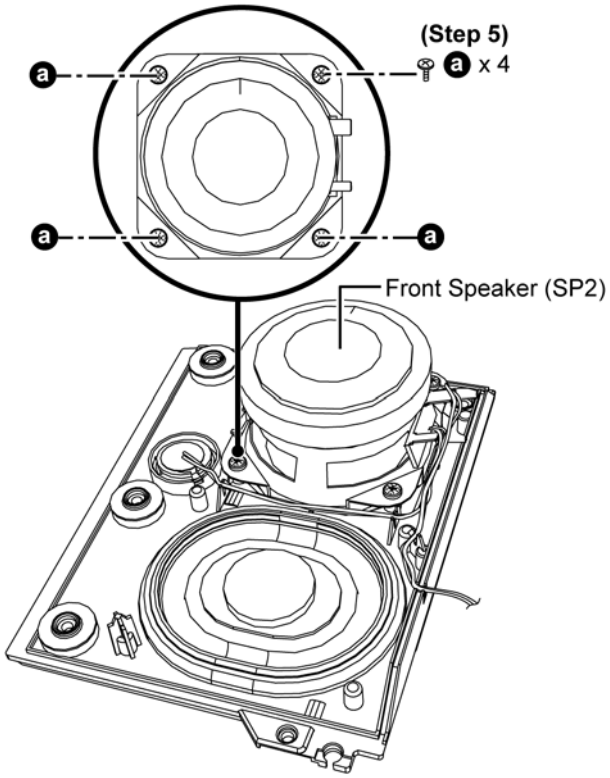

Caution : During assembling, insert the speaker wires into the slot as shown.

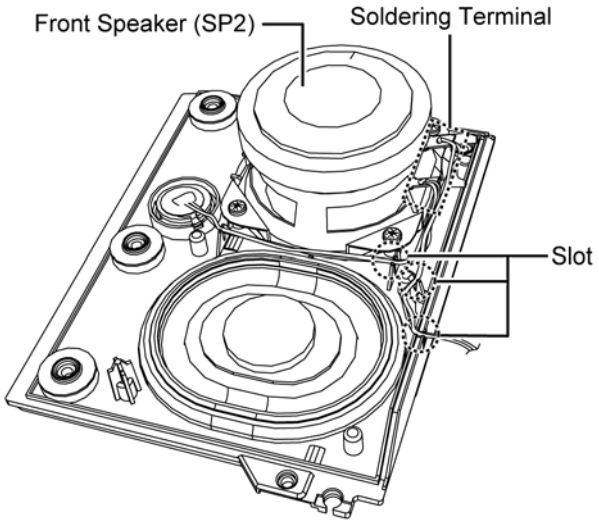

Step 6 : Remove Front Speaker (SP2).

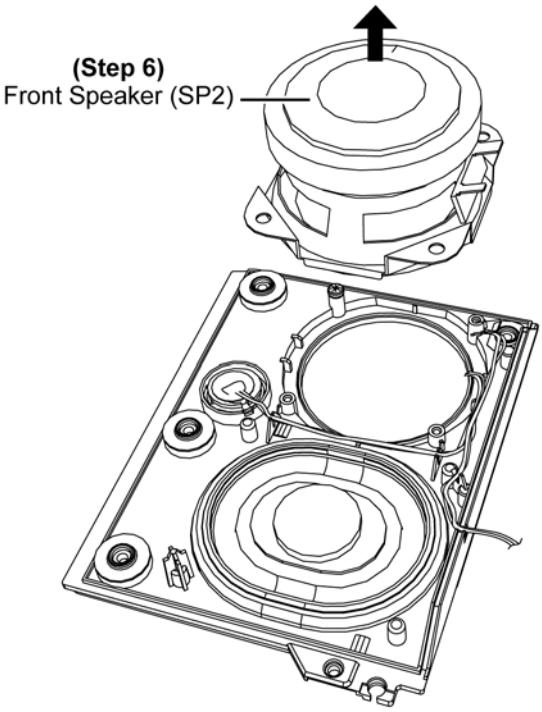

8.33. Disassembly of Front Speaker (SP1)

- Refer to “Disassembly of Stand Assembly”
- Refer to “Disassembly of Door Assembly”
- Refer to “Disassembly of Net Frame Assembly”
- Refer to “Disassembly of Front Panel Block”

Step 1 : Remove 5 screws.

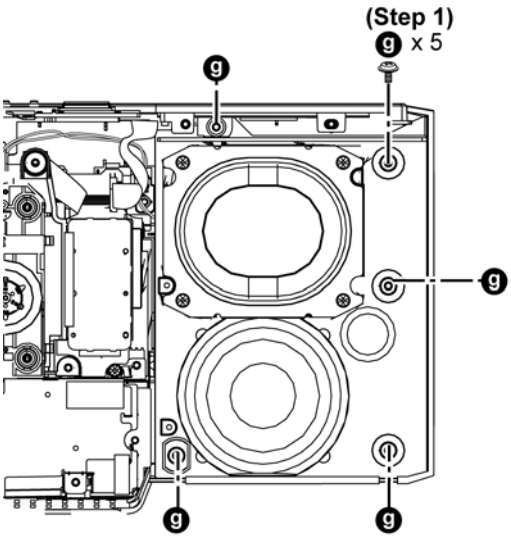

Step 2 : Using a Flathead screwdriver to lift up the Front Speaker Assembly (R).

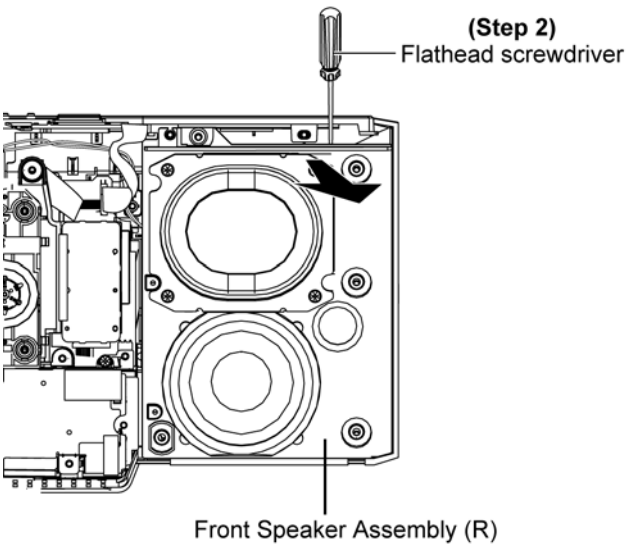

Step 3 : Desolder the red (+) wire and black (-) wire at the terminals of Front Speaker (SP1).

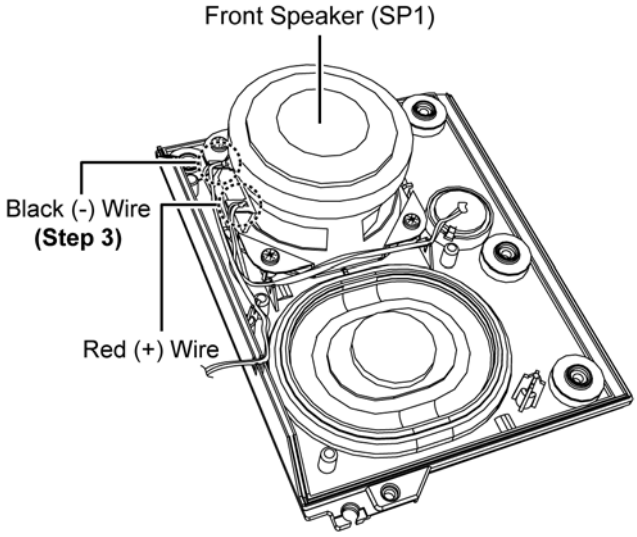

Step 4 : Remove 4 screws.

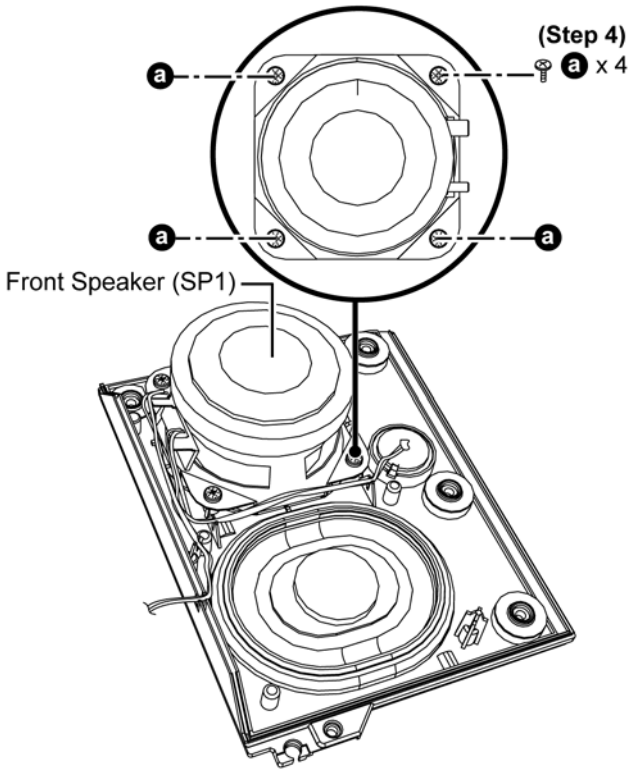

Step 5 : Remove Front Speaker (SP1).

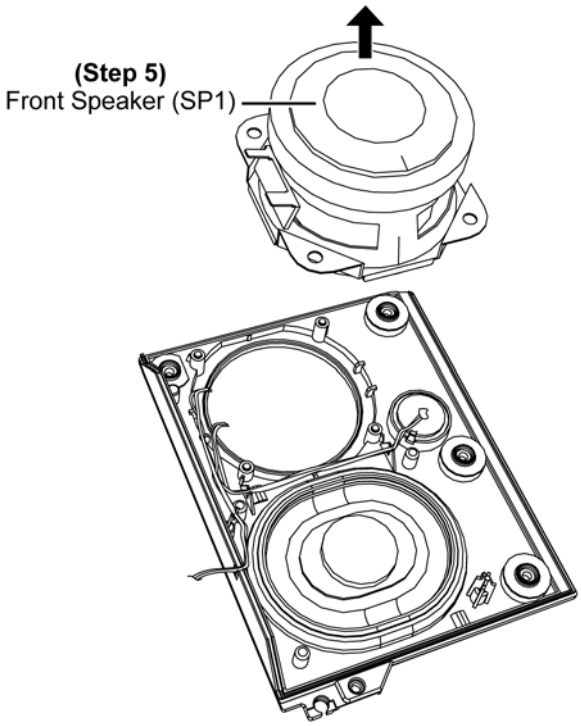

Caution : During assembling, insert the speaker wires into the slot as shown.

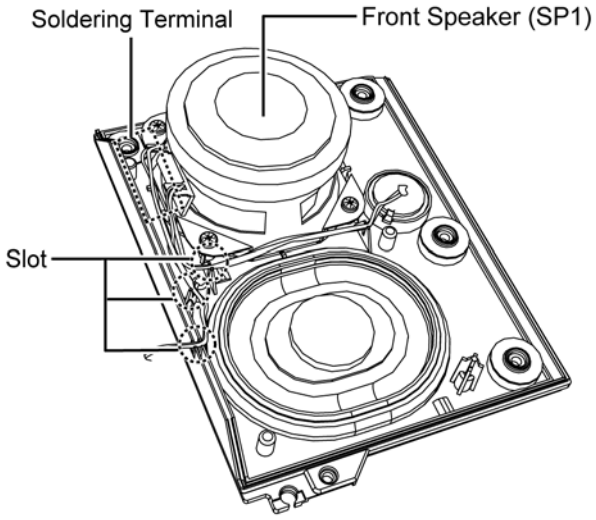

8.34. Disassembly of Piezo Unit (SP8)

- Refer to “Disassembly of Stand Assembly”
- Refer to “Disassembly of Door Assembly”
- Refer to “Disassembly of Net Frame Assembly”
- Refer to “Disassembly of Front Panel Block”
- Refer to “Disassembly of Panel P.C.B.”
- Refer to (Step 1) - (Step 3) of item 8.32.

Step 1 : Remove Glue.
Step 2 : Desolder the red (+) wire and black (-) wire at the terminals of Piezo Unit (SP8).

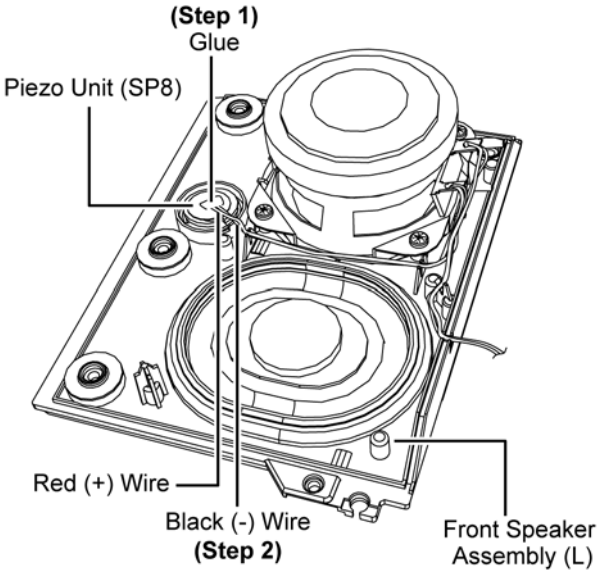

Caution : During assembling, insert the speaker wires into the slot as shown.

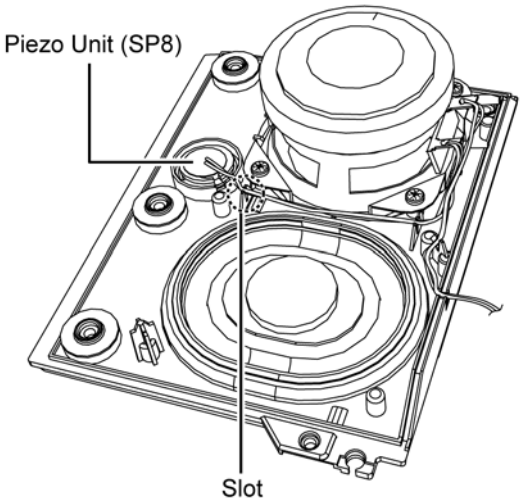

Step 3 : Remove Piezo Unit (SP8).

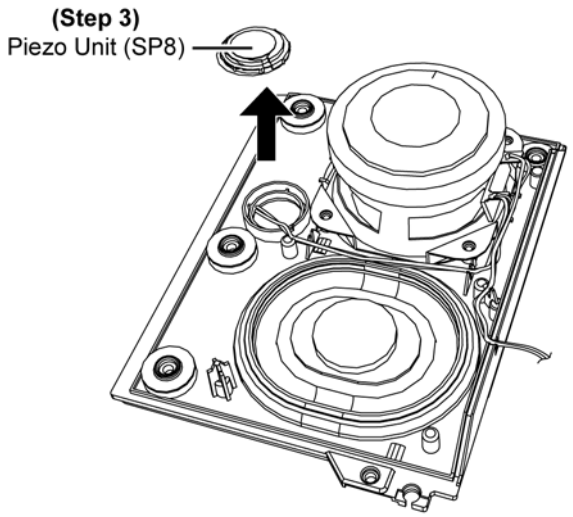

Caution : During assembling, ensure Piezo Unit (SP8) is align with slot as shown & glue properly to the Speaker Cabinet.

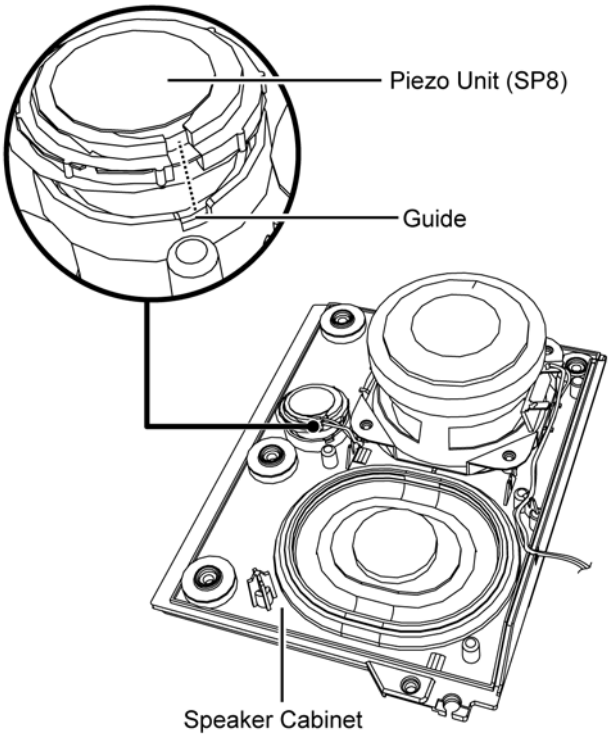

8.35. Disassembly of Piezo Unit (SP7)

- Refer to “Disassembly of Stand Assembly”
- Refer to “Disassembly of Door Assembly”
- Refer to “Disassembly of Net Frame Assembly”
- Refer to “Disassembly of Front Panel Block”
- Refer to (Step 1) - (Step 2) of item 8.33.

Step 1 : Remove Glue.
Step 2 : Desolder the red (+) wire and black (-) wire at the terminals of Piezo Unit (SP7).

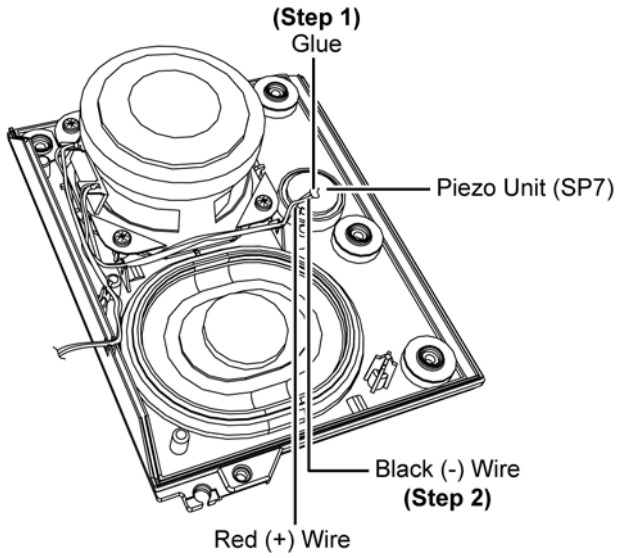

Caution : During assembling, insert the speaker wires into the slot as shown.

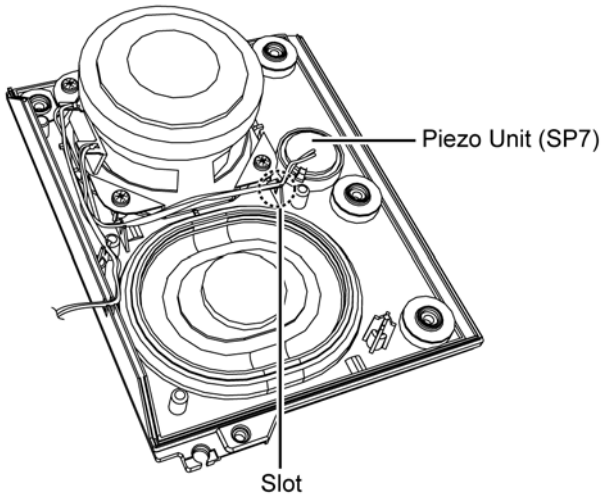

Step 3 : Remove Piezo Unit (SP7).

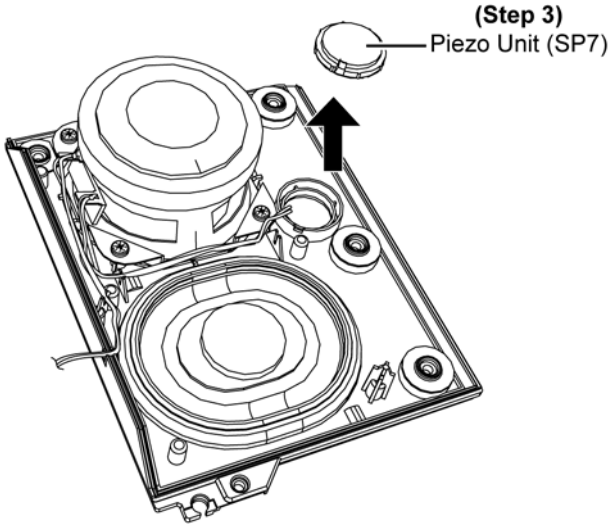

Caution : During assembling, ensure Piezo Unit (SP7) is align with slot as shown & glue properly to the Speaker Cabinet.

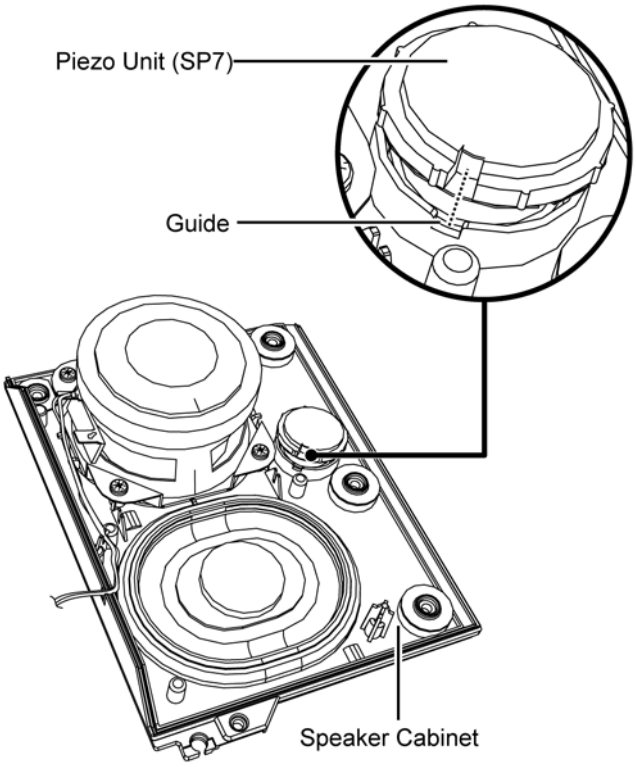

8.36. Disassembly of Passive Radiator (SP4)

- Refer to “Disassembly of Stand Assembly”
- Refer to “Disassembly of Door Assembly”
- Refer to “Disassembly of Net Frame Assembly”
- Refer to “Disassembly of Front Panel Block”
- Refer to “Disassembly of Panel P.C.B.”
- Refer to (Step 1) - (Step 3) of item 8.32.

Step 1 : Remove 3 screws.
Step 2 : Slightly tilt the Passive Radiator to release from the catch.

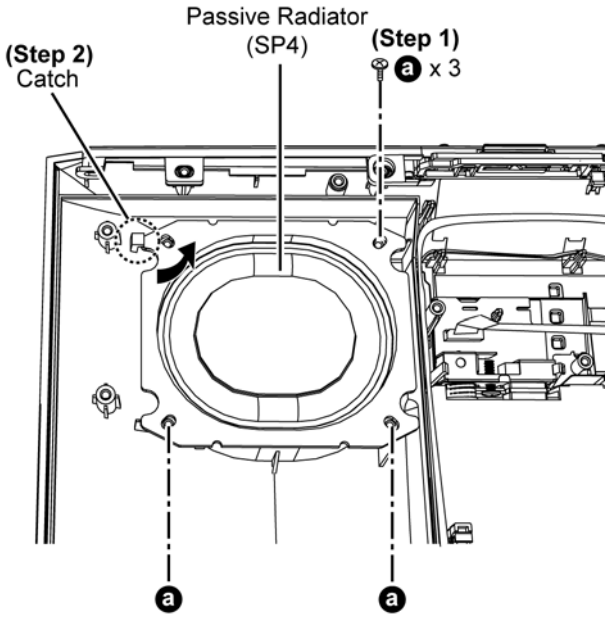

Step 3 : Remove Passive Radiator (SP4).

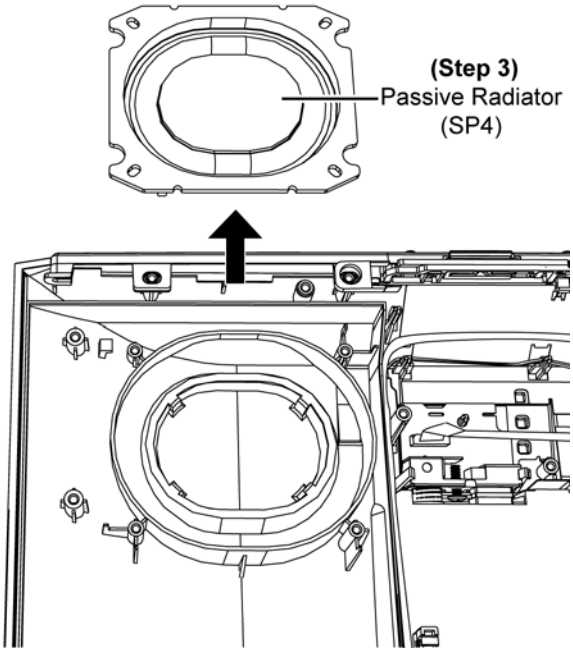

8.37. Disass embly of Passive Radiator (SP3)

- Refer to “Disassembly of Stand Assembly”
- Refer to “Disassembly of Door Assembly”
- Refer to “Disassembly of Net Frame Assembly”
- Refer to “Disassembly of Front Panel Block”
- Refer to (Step 1) - (Step 2) of item 8.33.

Step 1 : Remove 3 screws.
Step 2 : Slightly tilt the Passive Radiator to release from the catch.

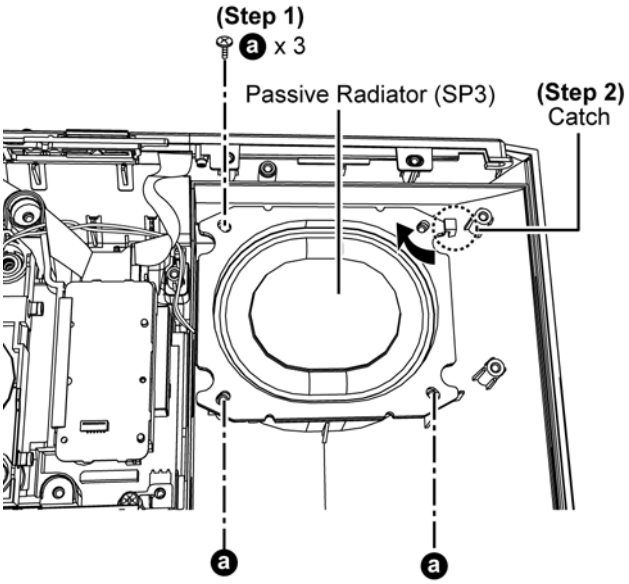

Step 3 : Remove Passive Radiator (SP3).

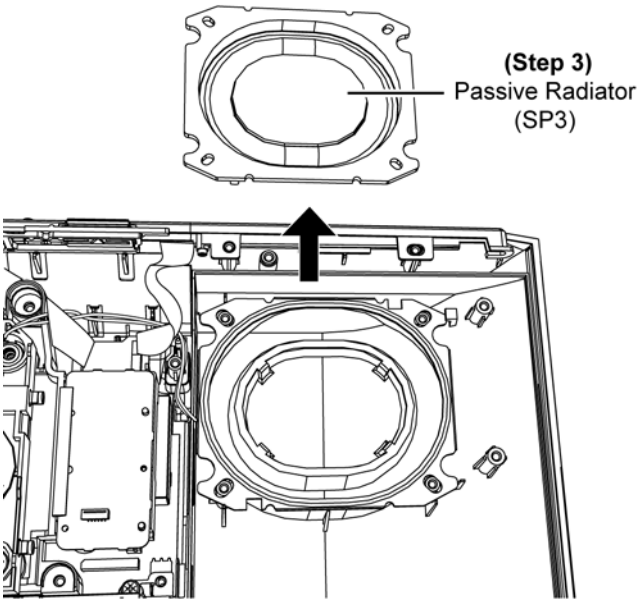

8.38. Disassembly of Main P.C.B.

- Refer to “Disassembly of Stand Assembly”
- Refer to “Disassembly of Door Assembly”
- Refer to “Disassembly of Net Frame Assembly”
- Refer to “Disassembly of Front Panel Block”
- Refer to “Disassembly of Panel P.C.B.”
- Refer to “Disassembly of CD Mechanism”
- Refer to (Step 1) - (Step 7) of item 8.27.

Step 1 : Detach 12P FFC at the connector (CN901) on the Main P.C.B..
Step 2 : Detach 2P wire at the connector (CN106) on the Main P.C.B..
Step 3 : Detach 2P wire at the connector (CN102) on the Main P.C.B..
Step 4 : Detach 9P FFC at the connector (CN350) on the Main P.C.B..

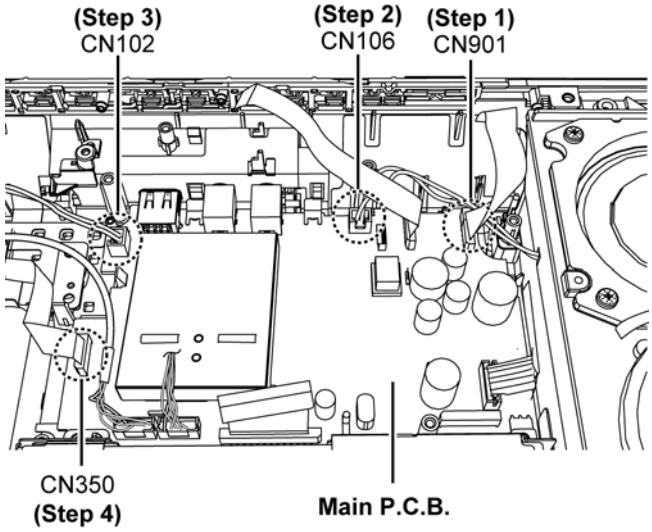

Step 5 : Lift up Himelons at the shaded area.

Caution : Replace the Himelons if they are torn during disassembling.

Step 6 : Remove Rivet.

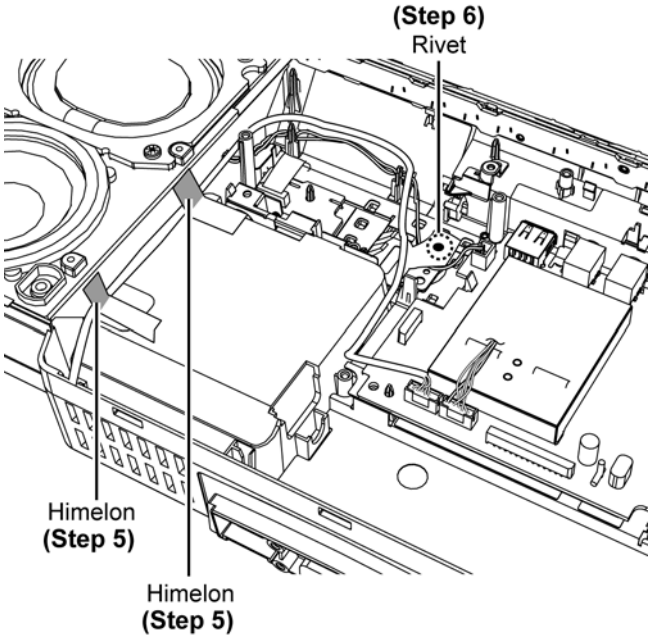

Caution: During assembling, ensure the wire is dress as picture show.

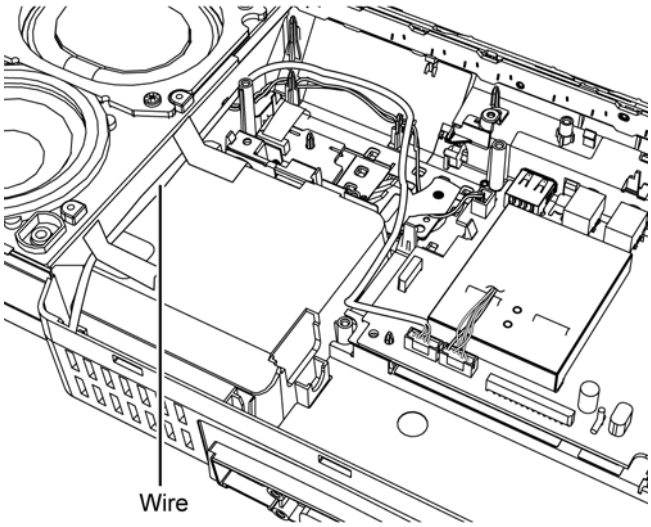

Step 7 : Release 1 Catch.

Step 8 : Lift up Main P.C.B..

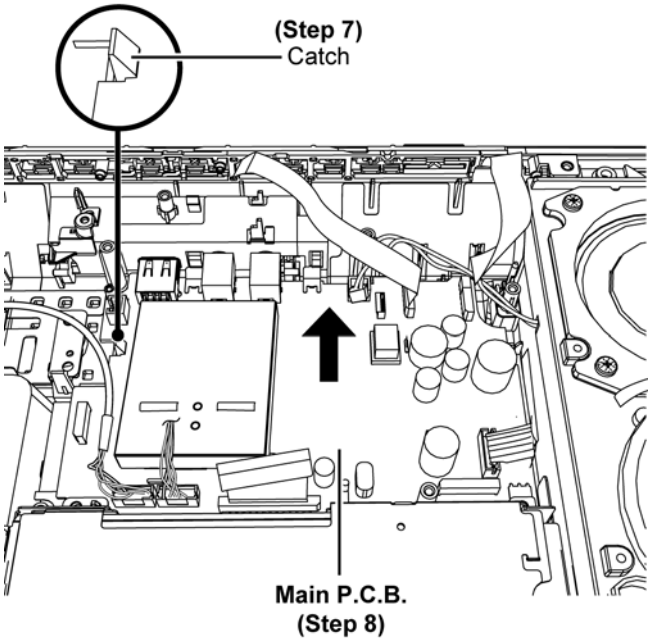

Step 9 : Remove Main P.C.B. as shown.

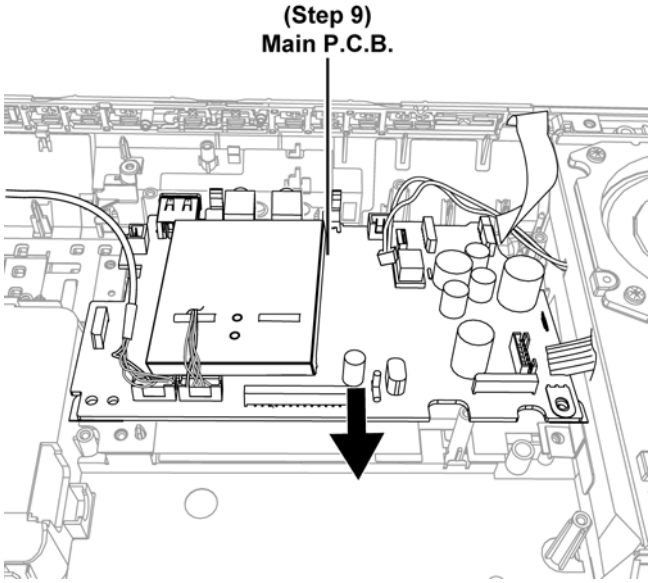

Step 10 : Desolder the 4 points.

Step 11 : Remove Shield.

Caution : During assembling, ensure the Shield is fixed to the Main P.C.B..

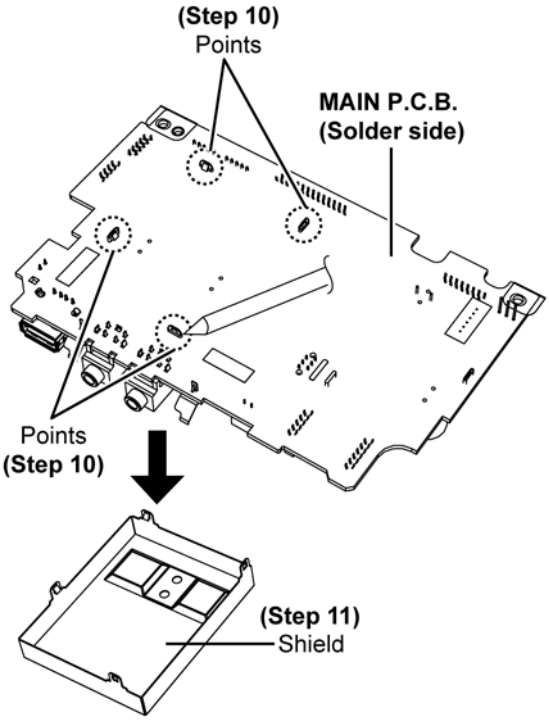

Caution : During assembling, ensure the Main P.C.B. is inserted into the hole of Rear Cabinet Assembly as shown. Check Aux Jack (JK951) and Headphone Jack (JK952).

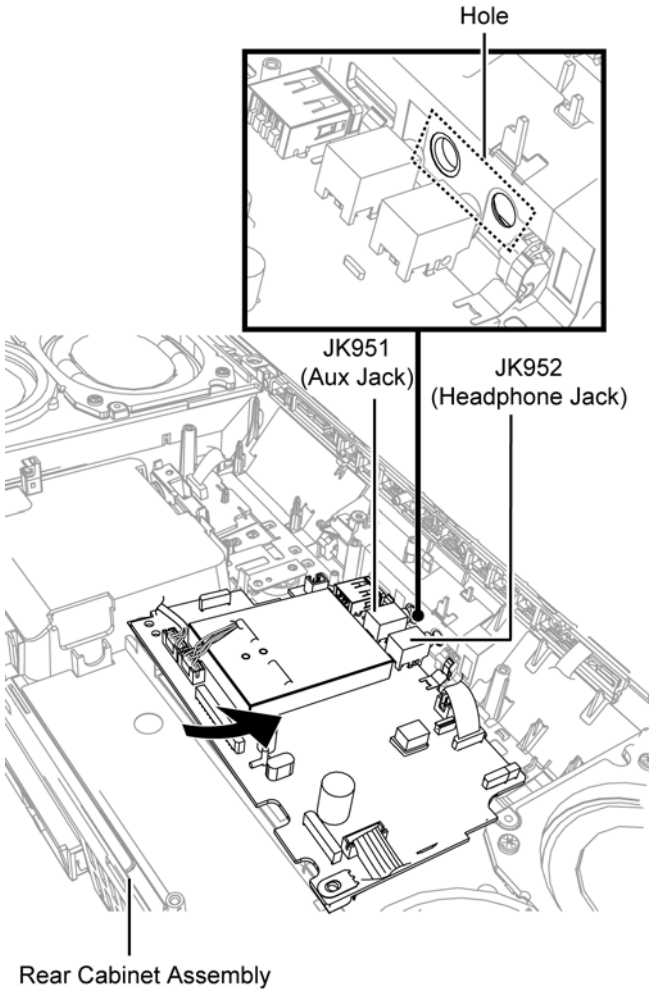

Caution : During assembling, ensure the Main P.C.B. is fully catched & properly seated onto the locator.

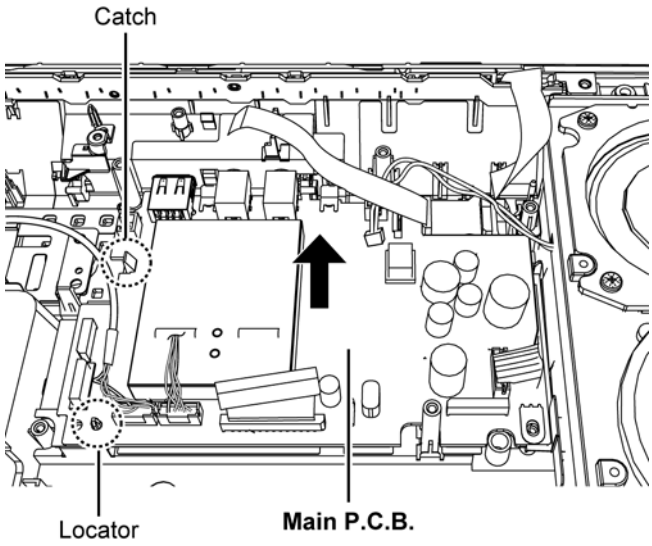

9 Service Position

Note: For description of the disassembly procedures, see the Section 8

9.1. Checking & Repairing of Panel P.C.B.

Step 1 : Remove Stand Assembly.
Step 2 : Remove Door Assembly.
Step 3 : Remove Net Frame Assembly.
Step 4 : Remove Front Panel Block.
Step 5 : Remove 2 screws and Ground Wire.

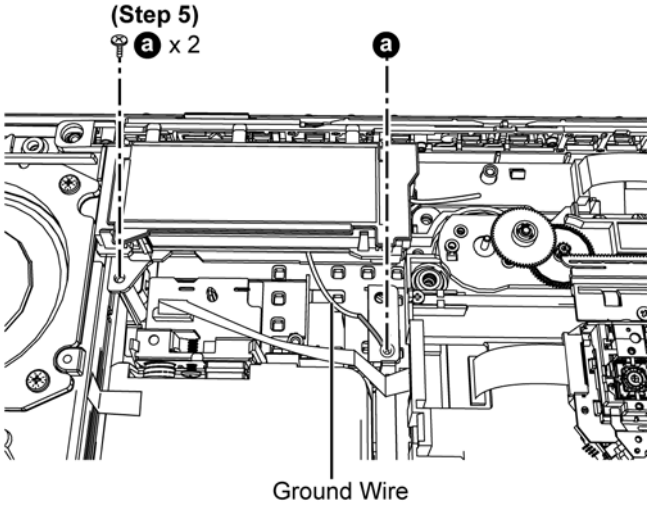

Step 6 : Release 1 catch.
Step 7 : Lift up the panel P.C.B..

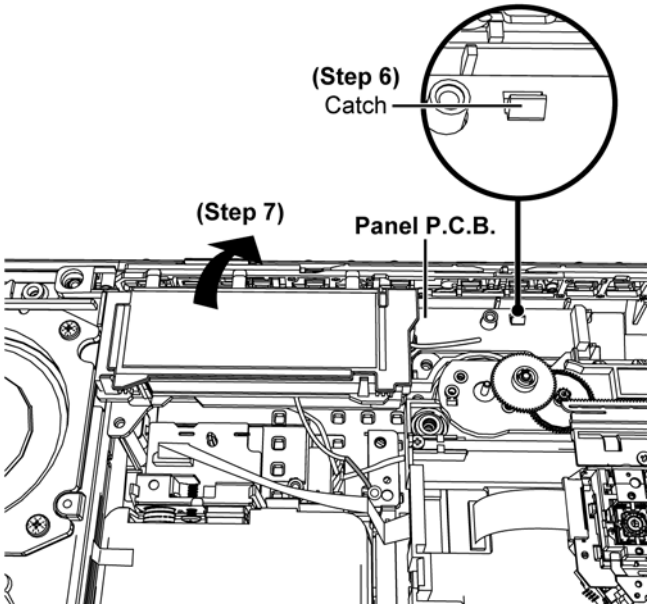

Step 8 : Place the Panel P.C.B. on the Support Block.

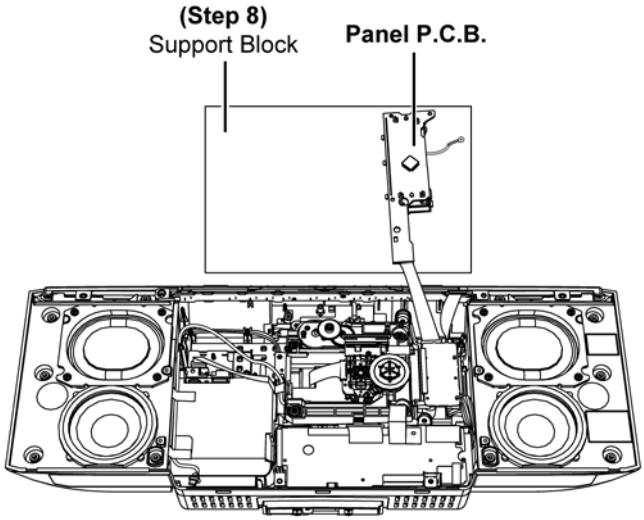

Step 9 : Use a tape to keep the centre switch (S643) depressed.

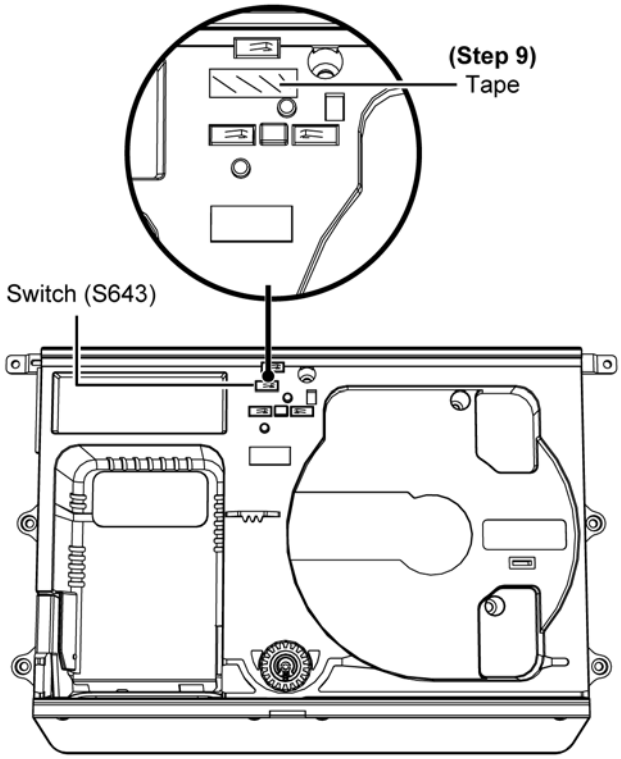

Step 10 : Place the Support Block to support the Front Cabinet Block as shown.
Step 11 : Connect 5P Wire at the connector (CN1002) on iPhone P.C.B..
Step 12 : Connect 15P extension cable (RFKZHC55K2) from CN300 on the Remote Sensor P.C.B. to CN303 on the Main P.C.B..

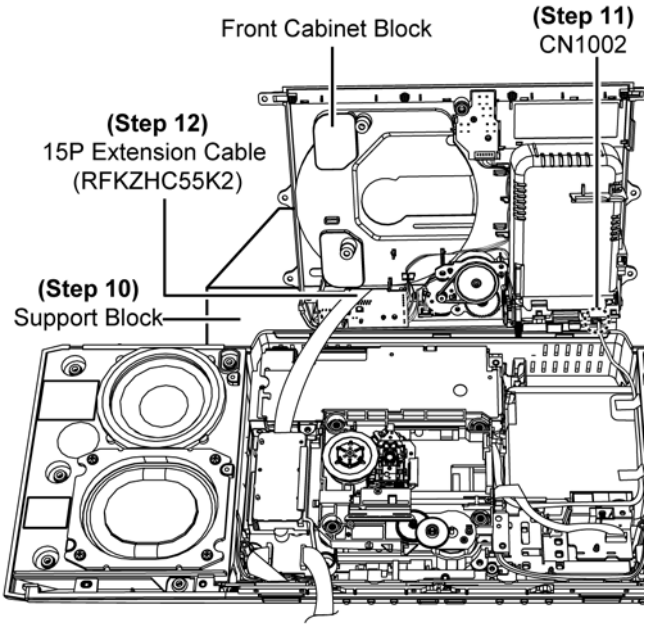

Step 13 : Check and repair Panel P.C.B. according to the diagram shown.

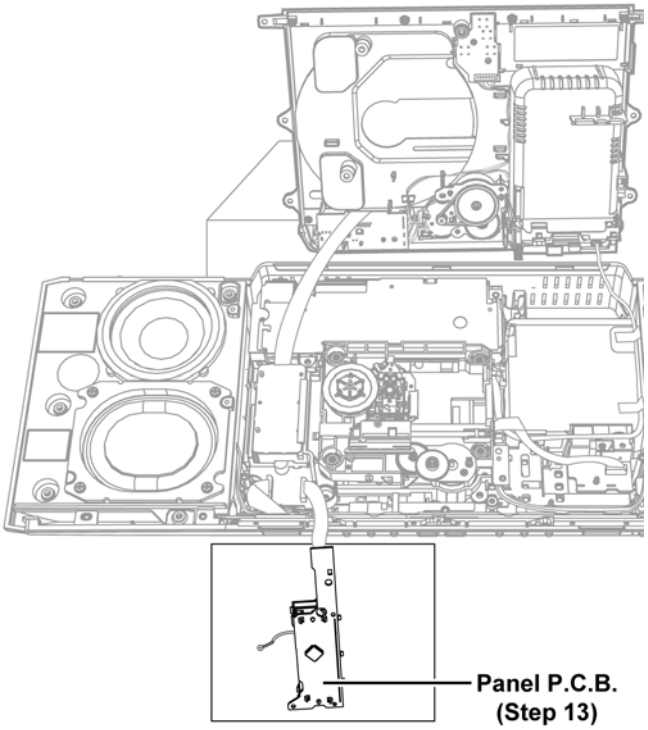

9.2. Checking & Repairing of CD Servo P.C.B.

Note : Insert CD before Checking CD Servo P.C.B.

Step 1 : Remove Stand Assembly.
Step 2 : Remove Door Assembly.
Step 3 : Remove Net Frame Assembly.
Step 4 : Remove Front Panel Block.
Step 5 : Remove Panel P.C.B..
Step 6 : Remove CD Mechanism.
Step 7 : Place the Panel P.C.B. on the Support Block.
Step 8 : Connect 9P FFC at the connector (CN6801) on Panel P.C.B..

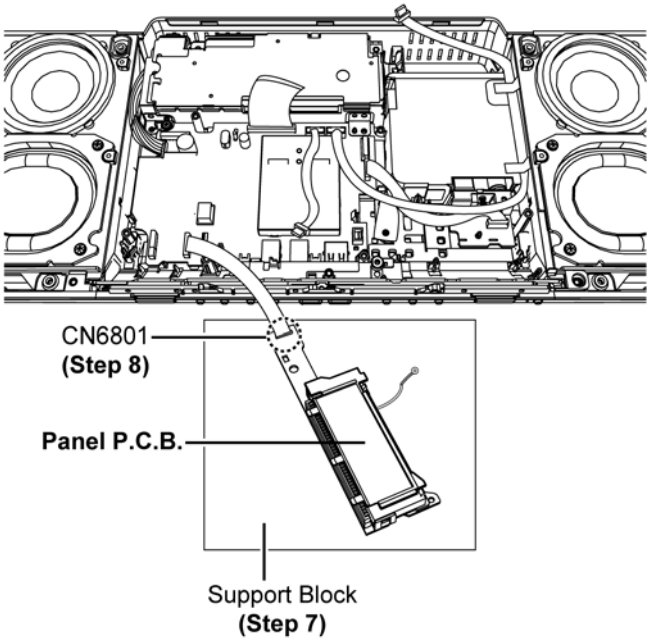

Step 9 : Use a tape to keep the centre switch (S643) depressed.

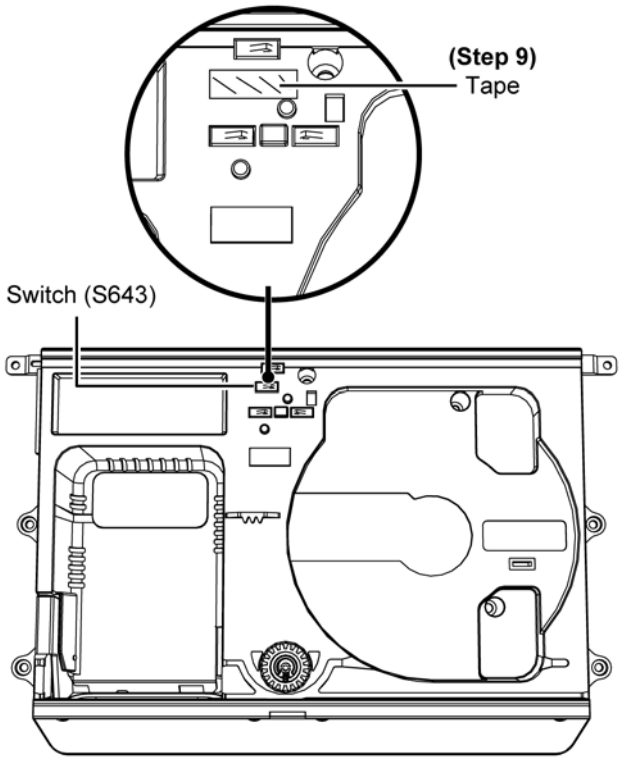

Step 10 : Place the Support Block to support the Front Cabinet Block as shown.

Step 11 : Connect 5P Wire at the connector (CN1002) on iPhone P.C.B..

Step 12 : Connect 15P extension cable (RFKZHC55K2) from CN300 on the Remote Sensor P.C.B. to CN303 on the Main P.C.B..

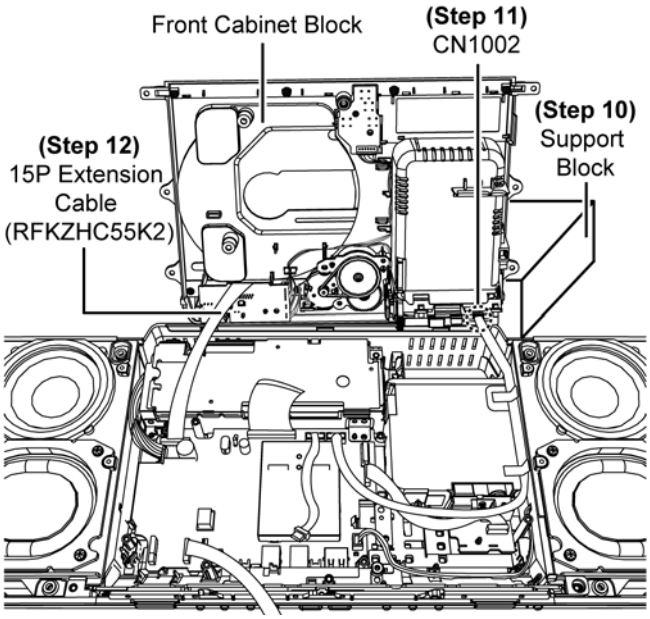

Step 13 : Place the CD Mechanism on the Support Block.

Step 14 : Place the Extension P.C.B. on the Insulating Material.

Step 15 : Connect 5P cable from Main P.C.B. to Extension P.C.B..

Step 16 : Connect 5P cable from Extension P.C.B. to CD Servo P.C.B..

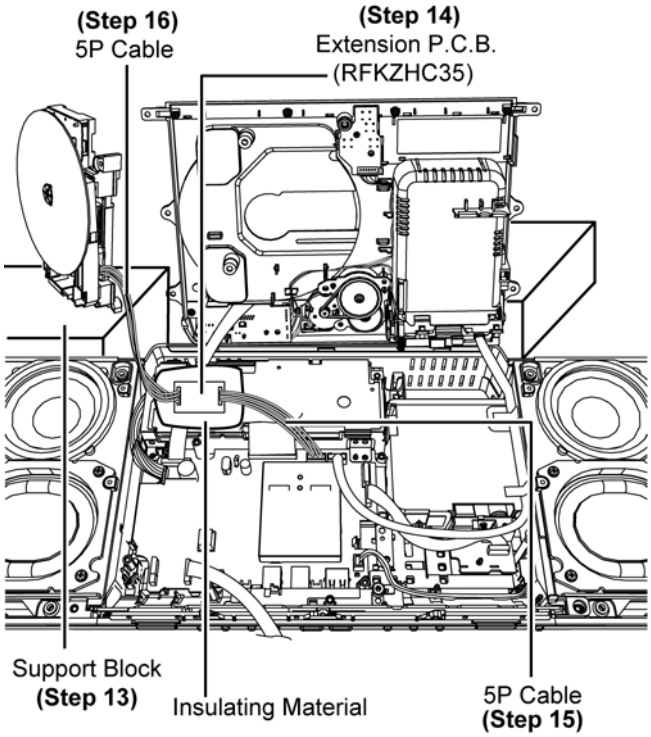

Step 17 : Connect 27P extension cable (RFKZHC55K1) from CN7002 on the Main P.C.B. to CN7002 on the CD Servo P.C.B..

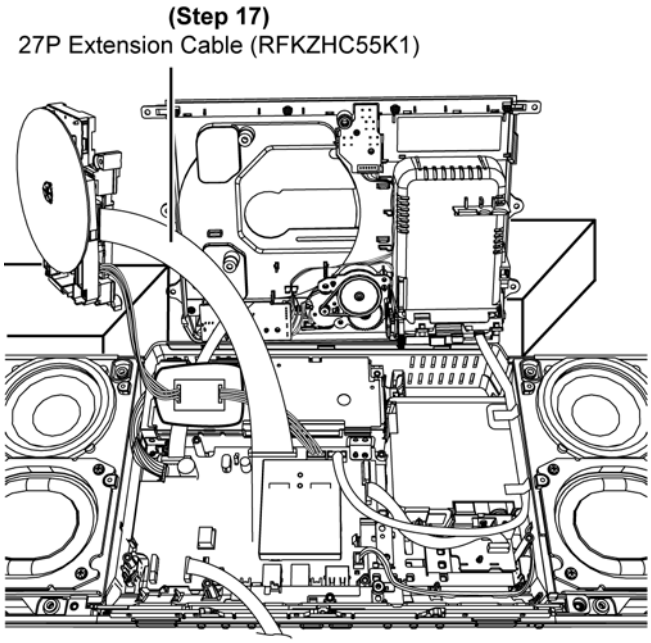

Step 18 : Place the CD Mechanism on the Support Block.

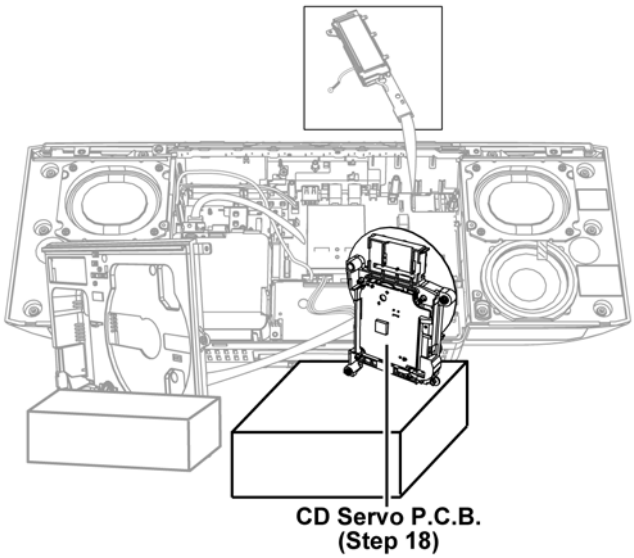

9.3. Checking & Repairing of Main (Side B) P.C.B.

Step 1 : Remove Stand Assembly.
Step 2 : Remove Door Assembly.
Step 3 : Remove Net Frame Assembly.
Step 4 : Remove Front Panel Block.
Step 5 : Remove Panel P.C.B..
Step 6 : Remove CD Mechanism.
Step 7 : Remove 2 screws.
Step 8 : Remove Inner Bracket.

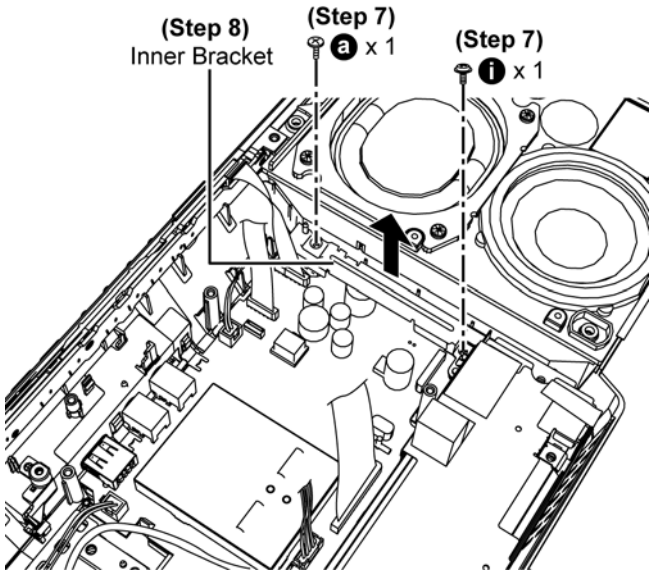

Step 9 : Remove 3 screws.
Step 10 : Lift up SMPS Unit.

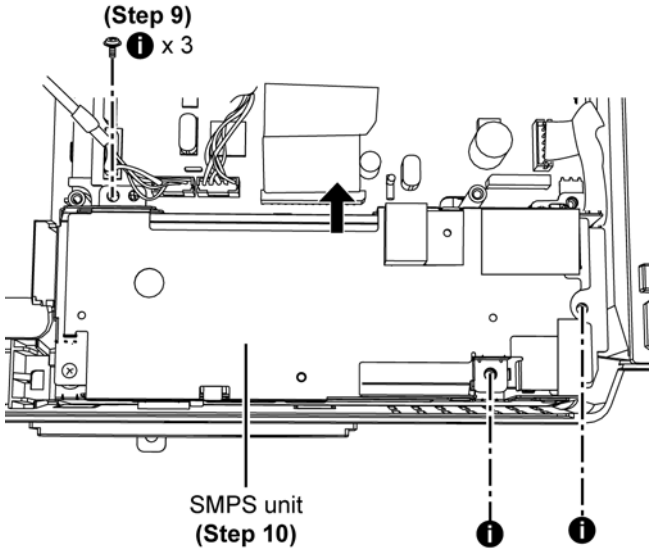

Step 11 : Detach 6P wire at the connector (CN905) on the SMPS P.C.B..
Step 12 : Remove SMPS Unit.

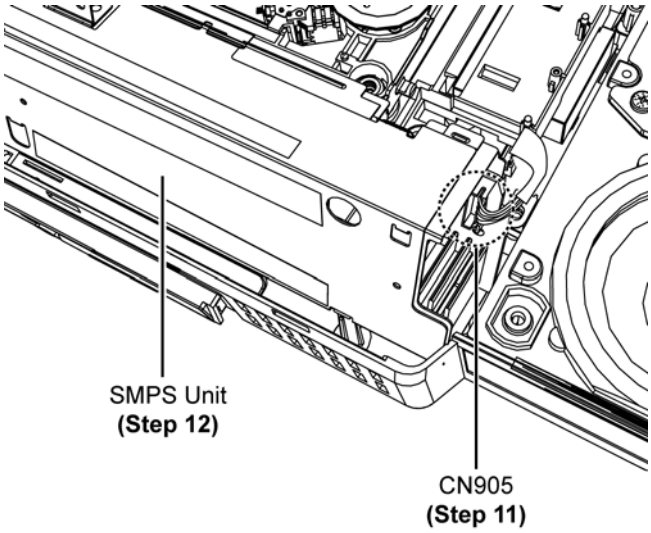

Step 13 : Lift up Himelons at the shaded area.
Caution : Replace the Himelons if they are torn during disassembling.
Step 14 : Remove Rivet.

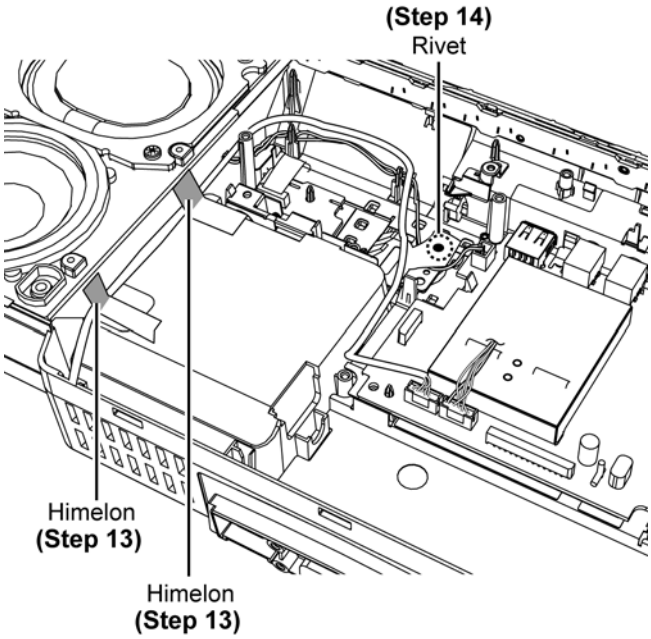

Step 15 : Release 1 Catch.
Step 16 : Lift up Main P.C.B..

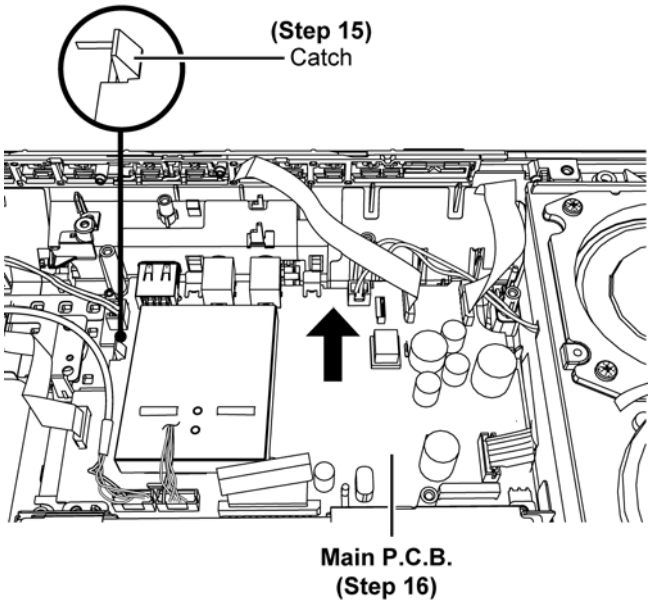

Step 17 : Flip over Main P.C.B..

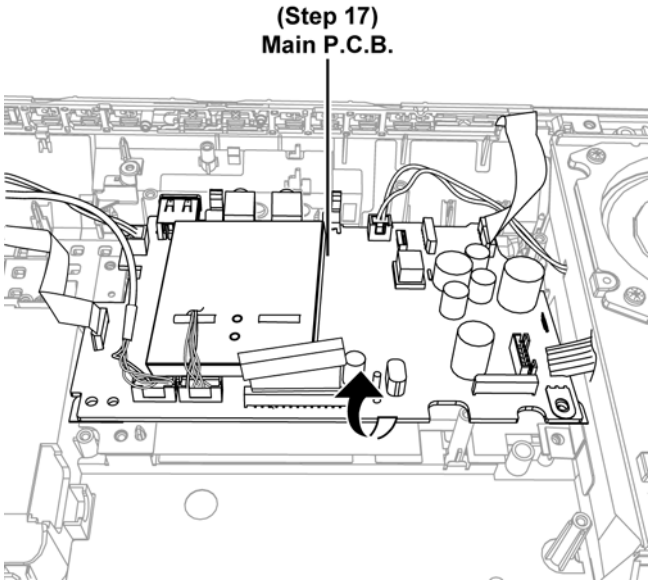

Step 18 : Place the Main P.C.B. on the Insulating Material.

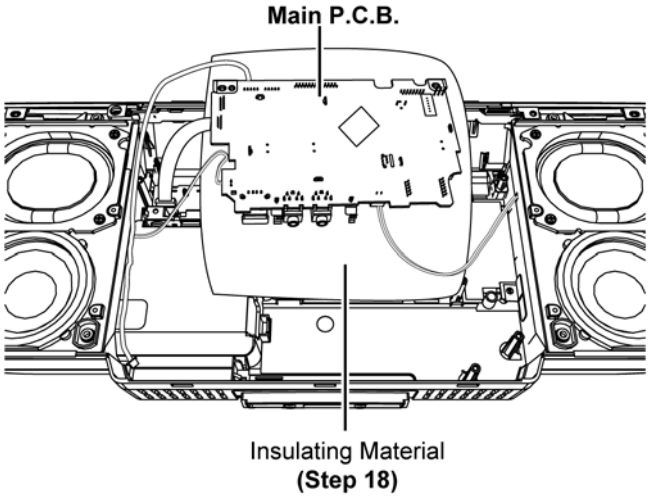

Step 19 : Place the CD Mechanism on the Support Block.
Step 20 : Place the Extension P.C.B. (RFKZHC35) on the Insulating Material.
Step 21 : Connect 5P cable from Main P.C.B. to Extension P.C.B..
Step 22 : Connect 5P cable from Extension P.C.B.. to CD Servo P.C.B..

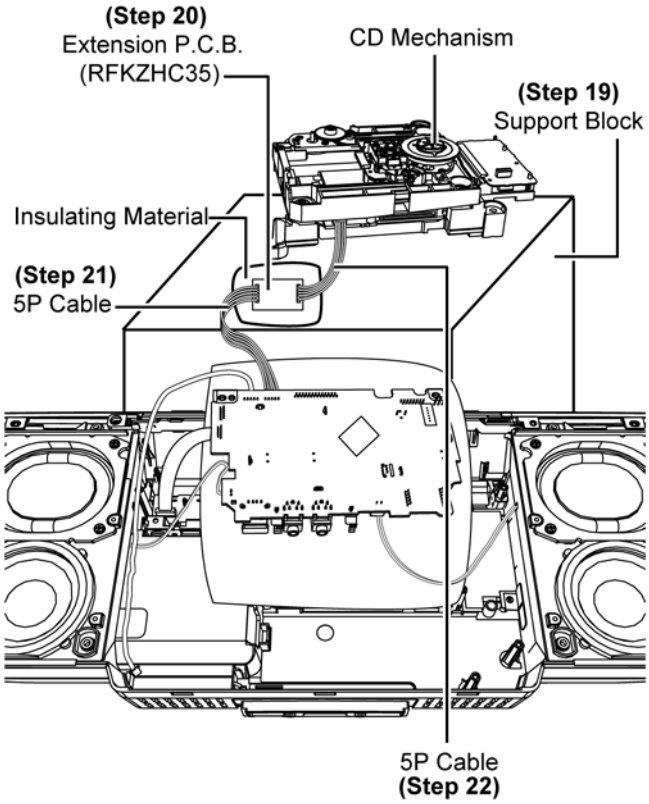

Step 23 : Connect 27P extension cable (RFKZHC55K1) from CN7002 on the Main P.C.B. to CN7002 on the CD Servo P.C.B..

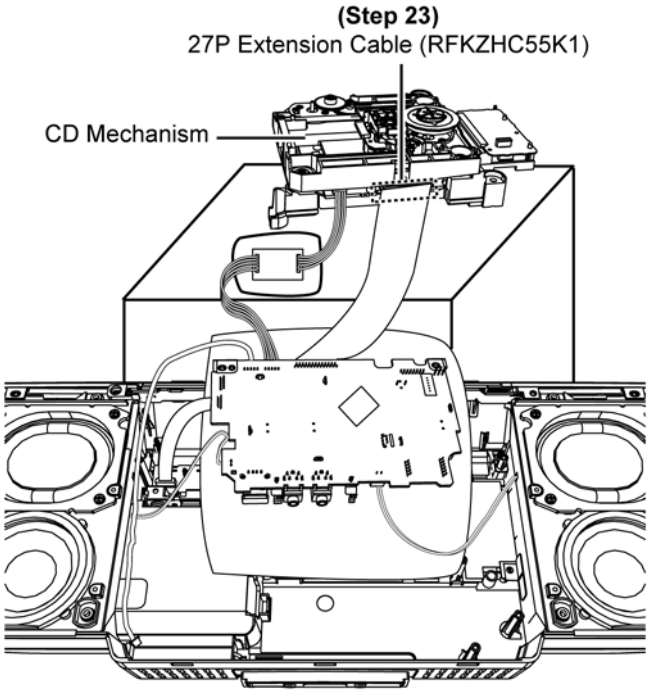

Step 24 : Place the Panel P.C.B. on the Insulating Material.
Step 25 : Connect 9P FFC at the connector (CN6801) on Panel P.C.B..

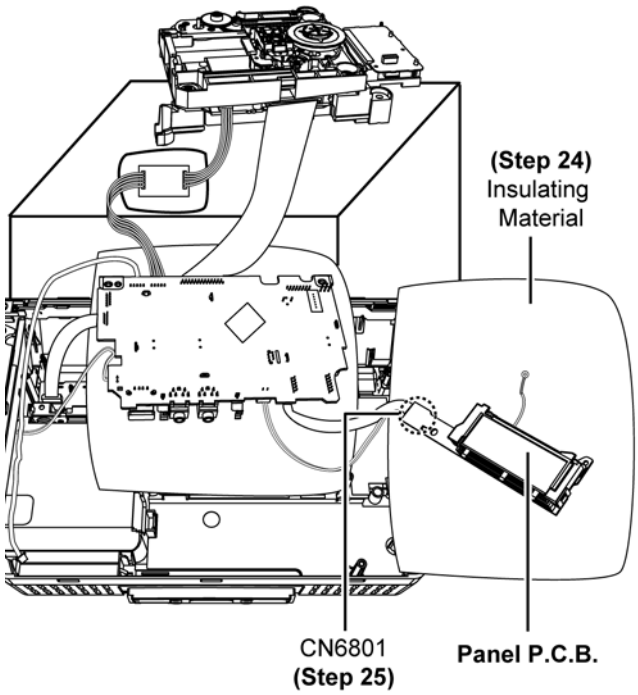

Step 26 : Use a tape to keep the centre switch (S643) depressed.

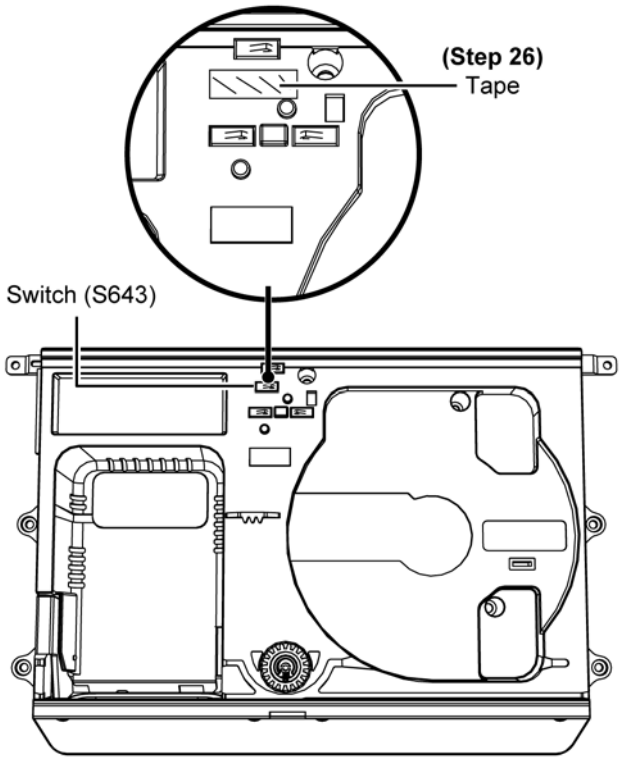

Step 27 : Place the Front Panel Block on the Insulating Material.

Step 28 : Connect 5P Wire at the connector (CN1002) on iPhone P.C.B..

Step 29 : Connect 15P extension cable (RFKZHC55K2) from CN300 on the Remote Sensor P.C.B. to CN303 on the Main P.C.B..

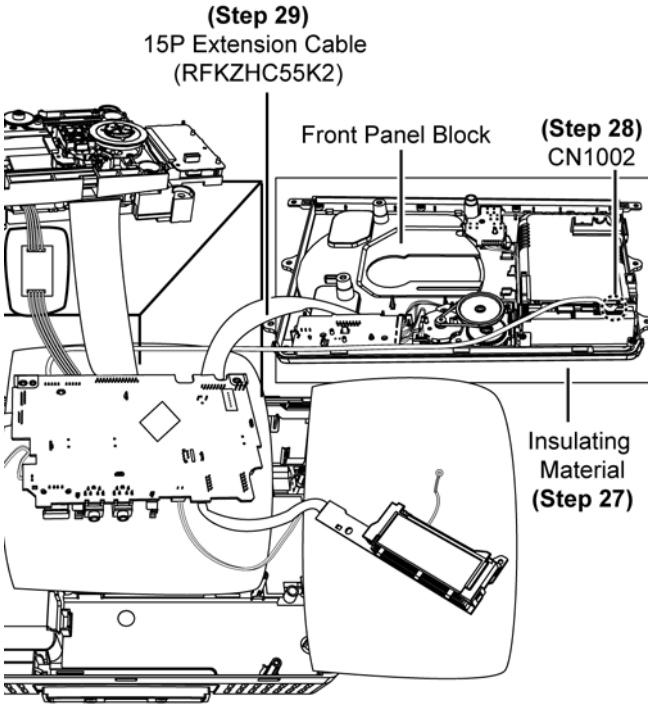

Step 30 : Place the SMPS Unit on the Insulating Material.

Step 31 : Connect 6P wire at the connector (CN905) on SMPS P.C.B..

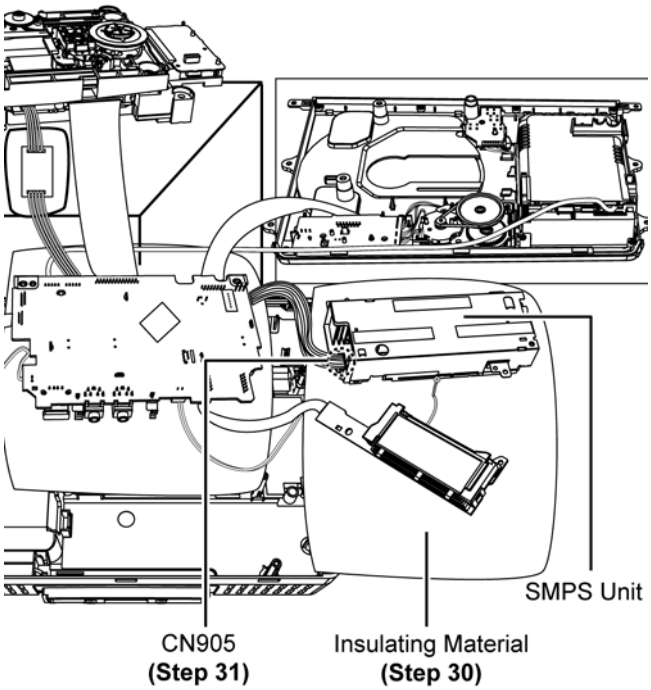

Step 32 : Check and repair Main (Side B) P.C.B. according to the diagram shown.

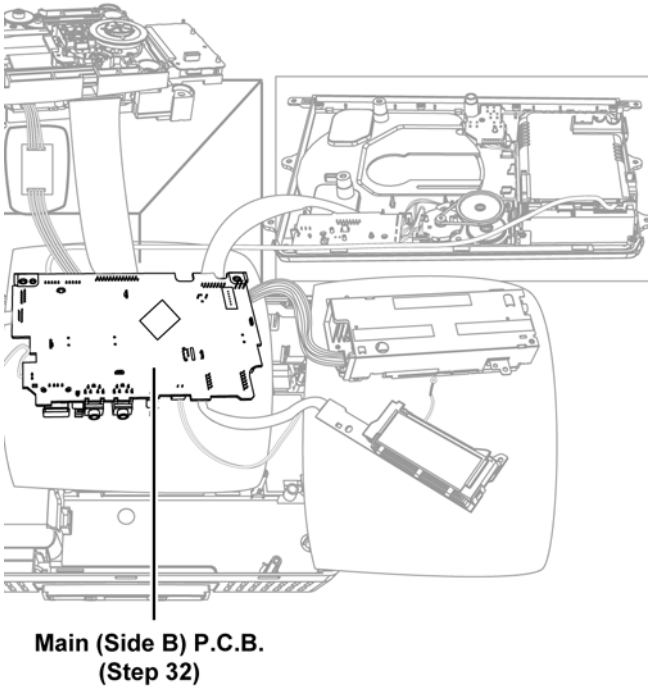

9.4. Checking & Repairing of Main (Side A) P.C.B.

• Refer to (Step 1) - (Step 12) of item 9.3.

Step 1 : Detach 12P FFC at the connector (CN901) on the Main P.C.B..
Step 2 : Detach 2P wire at the connector (CN106) on the Main P.C.B..
Step 3 : Detach 2P wire at the connector (CN102) on the Main P.C.B..
Step 4 : Detach 9P FFC at the connector (CN350) on the Main P.C.B..

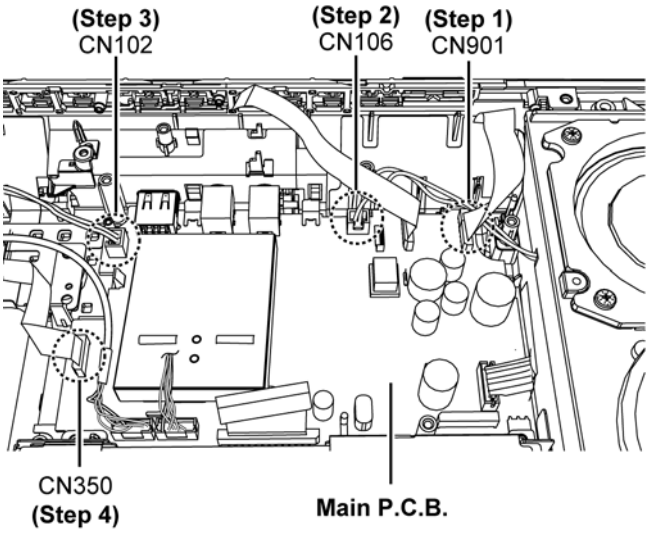

Step 5 : Lift up Himelons at the shaded area.
Caution : Replace the Himelons if they are torn during disassembling.
Step 6 : Remove Rivet.

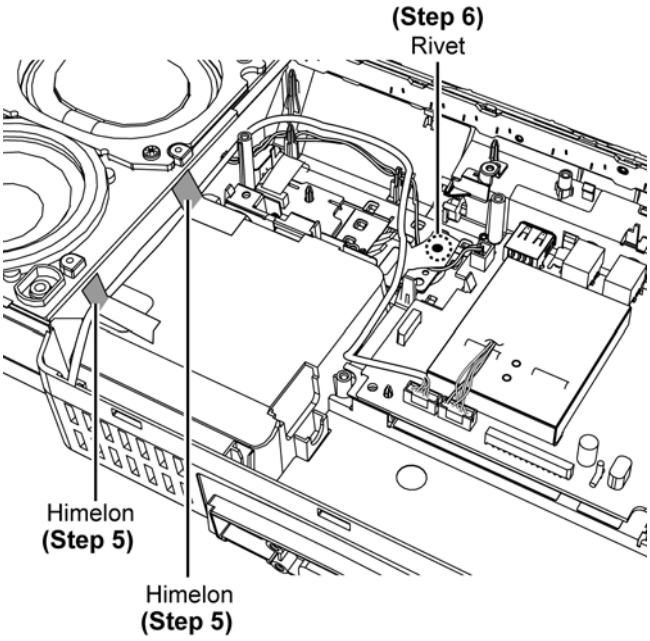

Step 7 : Release 1 Catch.
Step 8 : Lift up Main P.C.B..

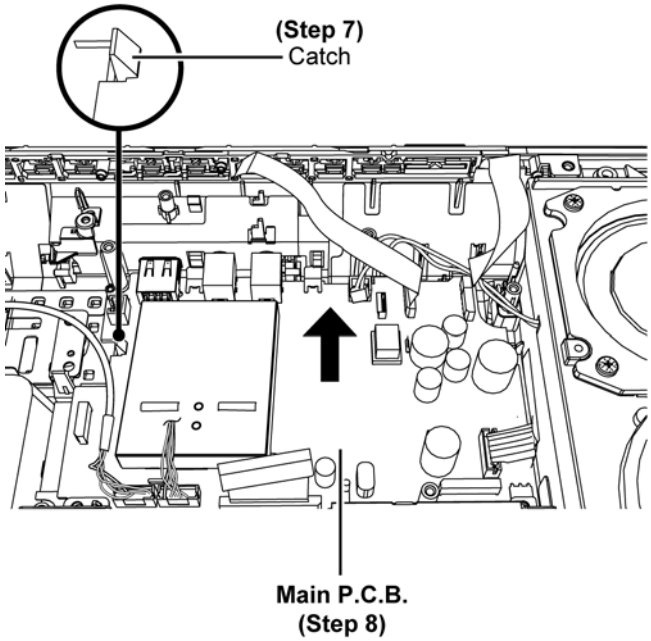

Step 9 : Remove Main P.C.B. as shown.

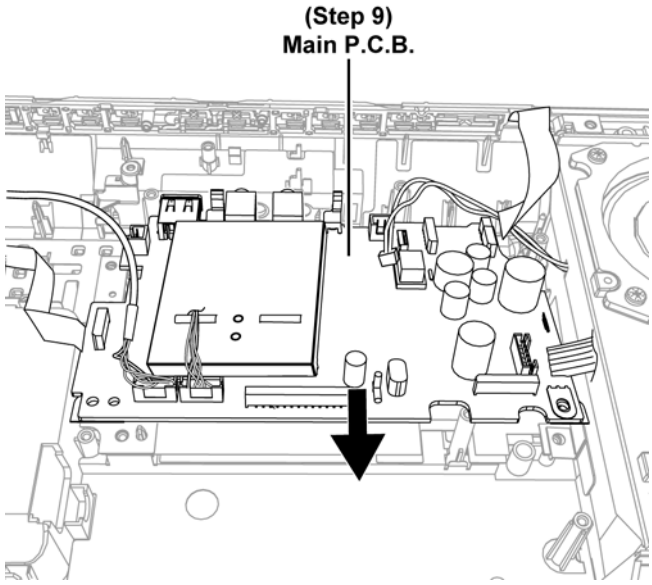

Step 10 : Desolder the 4 points.
Step 11 : Remove the Shield.

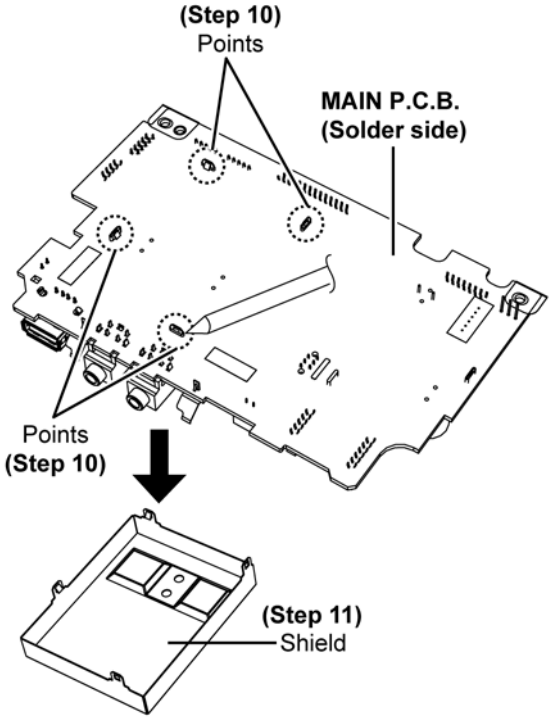

Step 12 : Place the Main P.C.B. on the Insulating Material.
Step 13 : Connect 12P FFC at the connector (CN901) on the Main P.C.B..
Step 14 : Connect 2P wire at the connector (CN106) on the Main P.C.B..
Step 15 : Connect 2P wire at the connector (CN102) on the Main P.C.B..

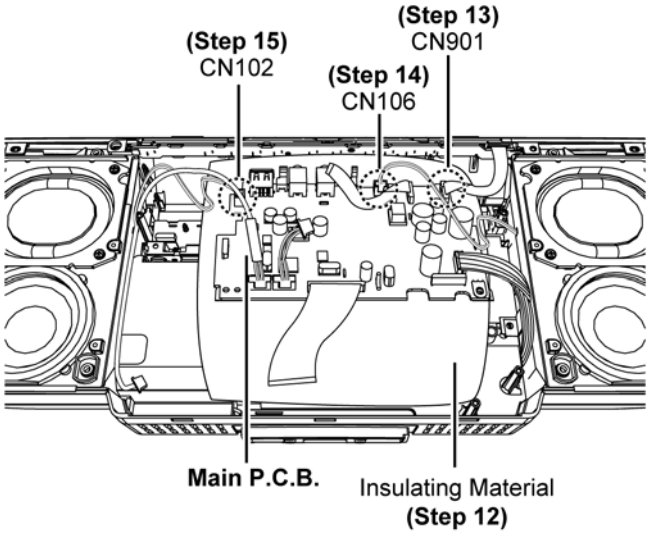

Step 16 : Place the CD Mechanism on the Support Block.
Step 17 : Place the Extension P.C.B. (RFKZHC35) on the Insulating Material.
Step 18 : Connect 5P cable from Main P.C.B. to Extension P.C.B..
Step 19 : Connect 5P cable from Extension P.C.B.. to CD Servo P.C.B..

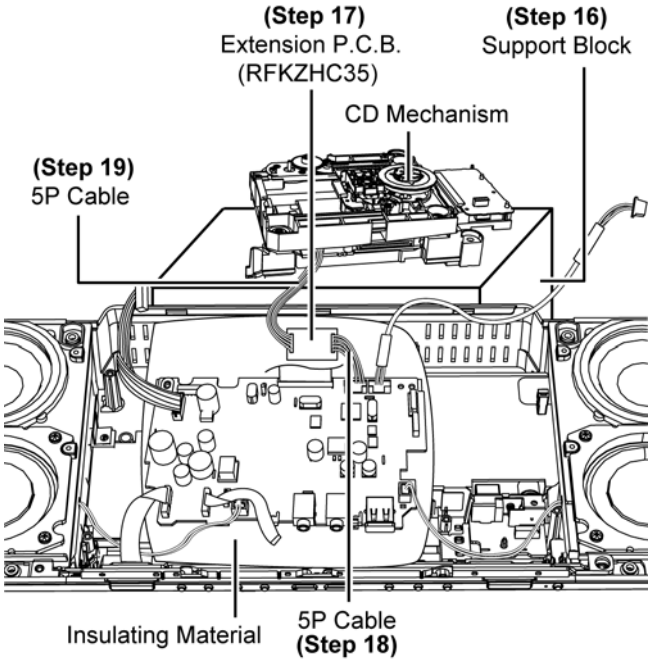

Step 20 : Connect 27P extension cable (RFKZHC55K1) from CN7002 on the Main P.C.B. to CN7002 on the CD Servo P.C.B..

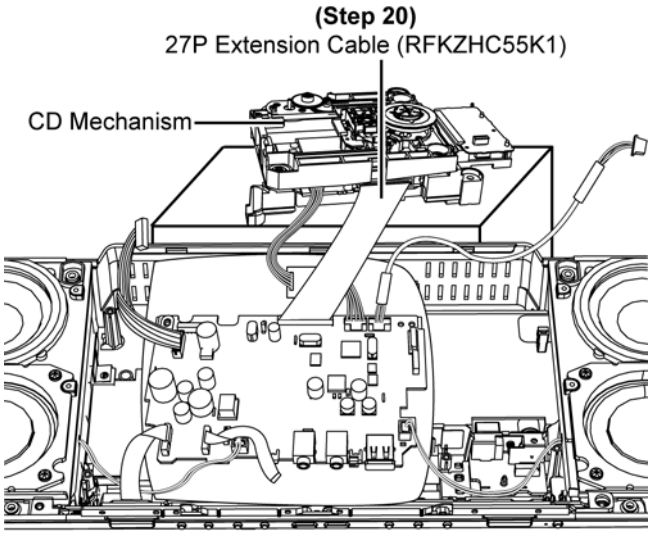

Step 21 : Place the Panel P.C.B. on the Insulating Material.
Step 22 : Connect 9P FFC at the connector (CN6801) on Panel P.C.B..

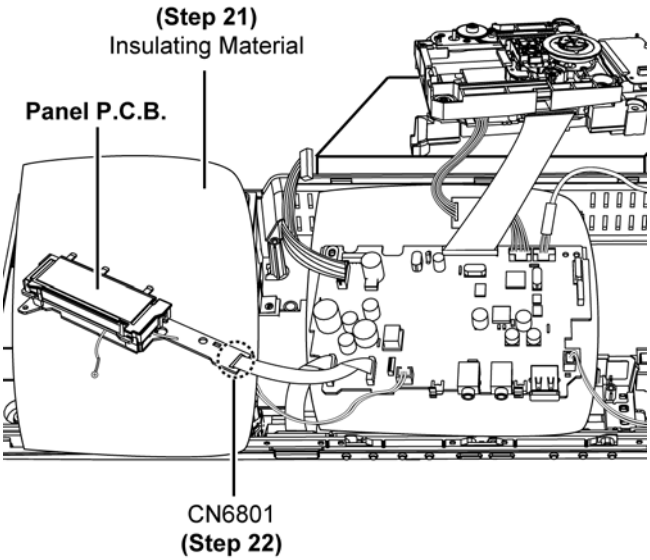

Step 23 : Use a tape to keep the centre switch (S643) depressed.

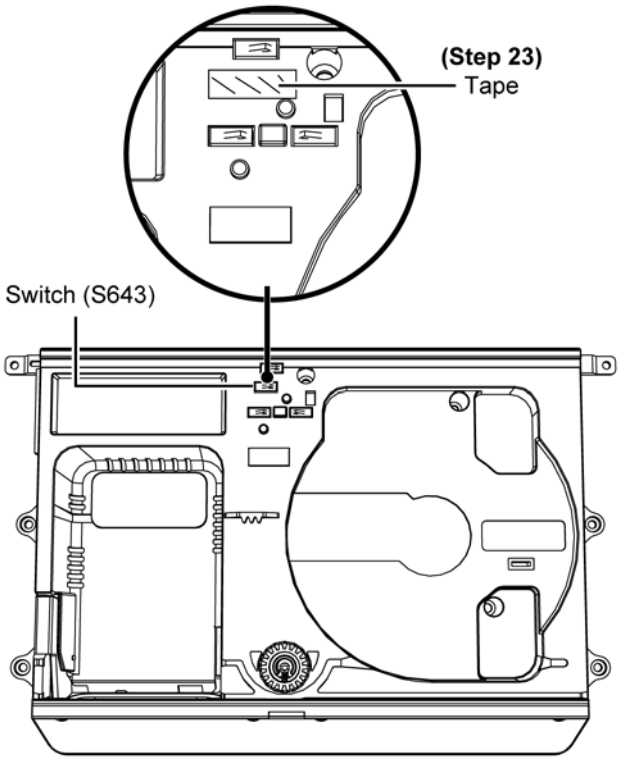

Step 24 : Place the Front Panel Block on the Insulating Material.
Step 25 : Connect 5P Wire at the connector (CN1002) on iPhone P.C.B..
Step 26 : Connect 15P extension cable (RFKZHC55K2) from CN300 on the Remote Sensor P.C.B. to CN303 on the Main P.C.B..

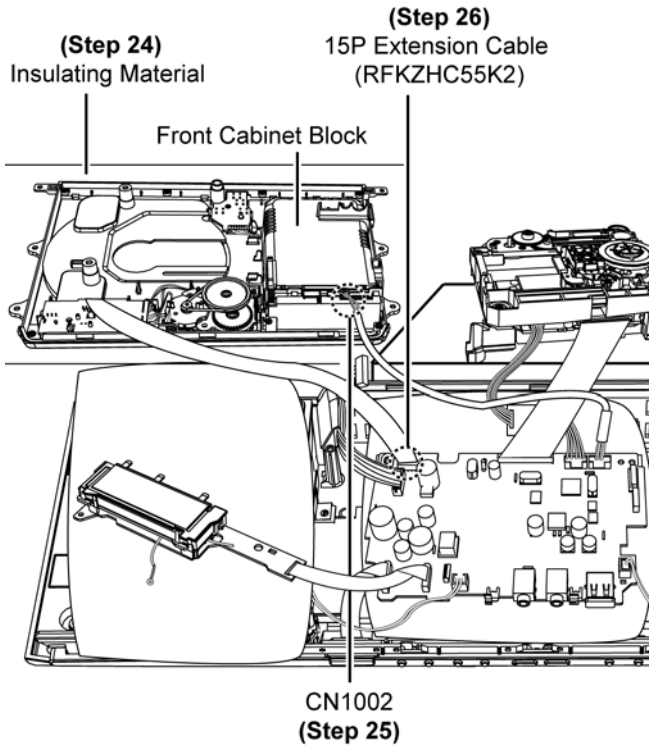

Step 27 : Place the SMPS Assembly on the Insulating Material.
Step 28 : Connect 6P wire at the connector (CN905) on SMPS P.C.B..

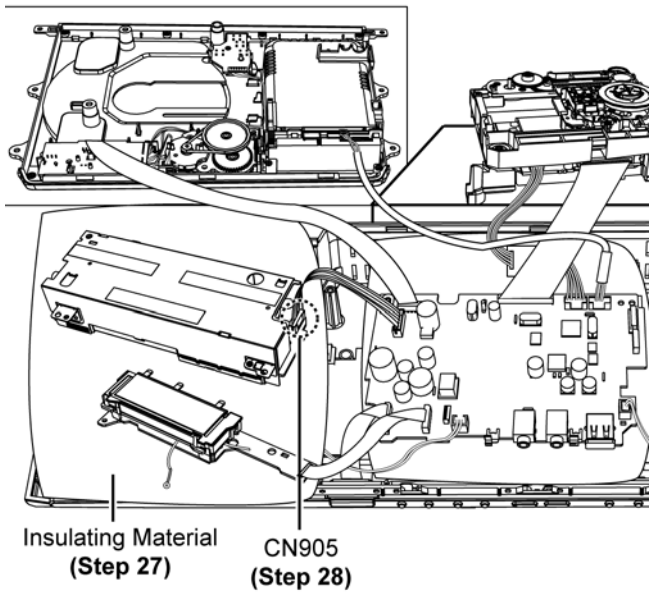

Step 29 : Check and repair Main (Side A) P.C.B. according to the diagram shown.

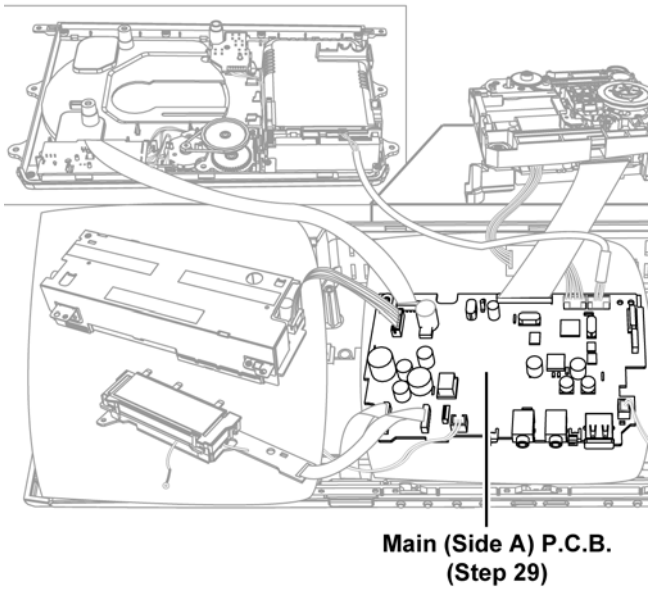

9.5. Checking & Repairing of SMPS P.C.B.

- Refer to (Step 1) - (Step 12) of item 9.3.

Step 1 : Lift up the Himelons.

Caution : Replace the Himelons if they are torn during disassembling.

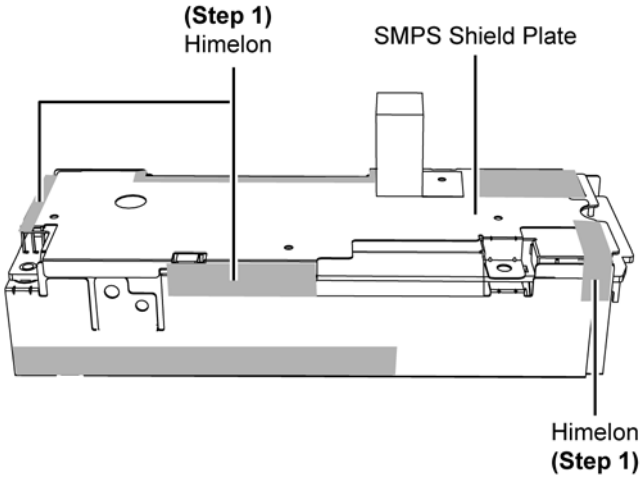

Step 2 : Lift up the Himelons.

Caution : Replace the Himelons if they are torn during disassembling.

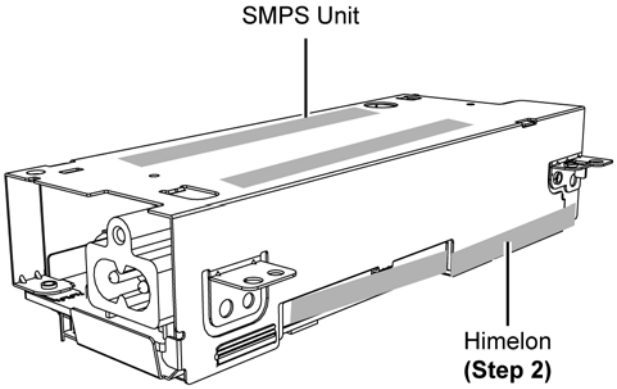

Step 3 : Gently push up the SMPS Shield Plate to release the catches.

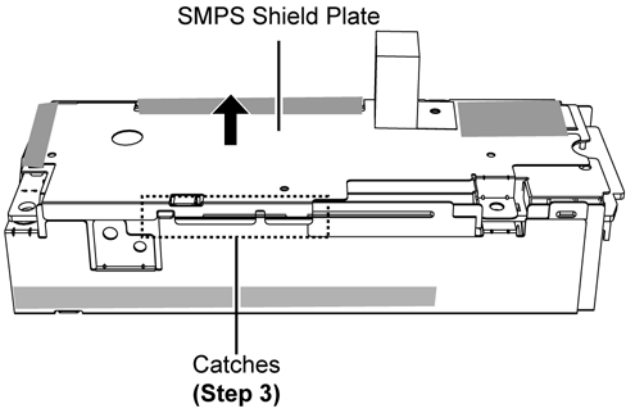

Step 4 : Gently push up the SMPS Shield Plate to release the catches.

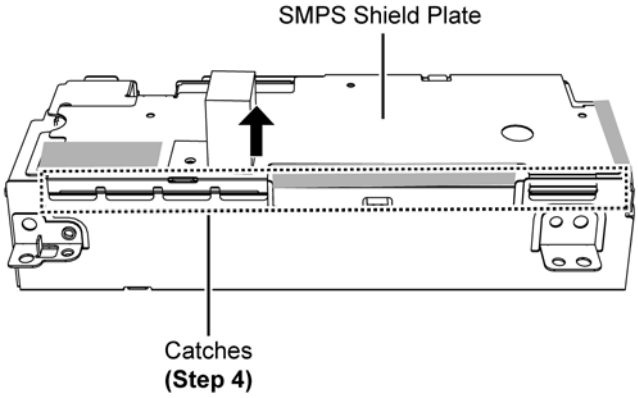

Step 5 : Remove SMPS Shield Plate.

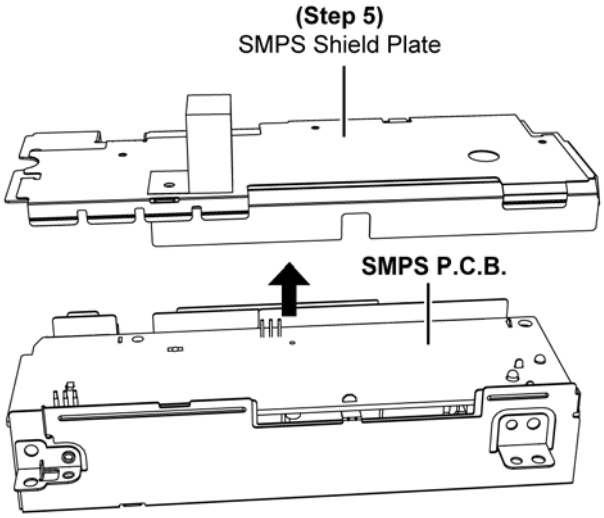

Step 6 : Lift up Himelons at the shaded area.

Caution : Replace the Himelons if they are torn during disassembling.

Step 7 : Remove Rivet.

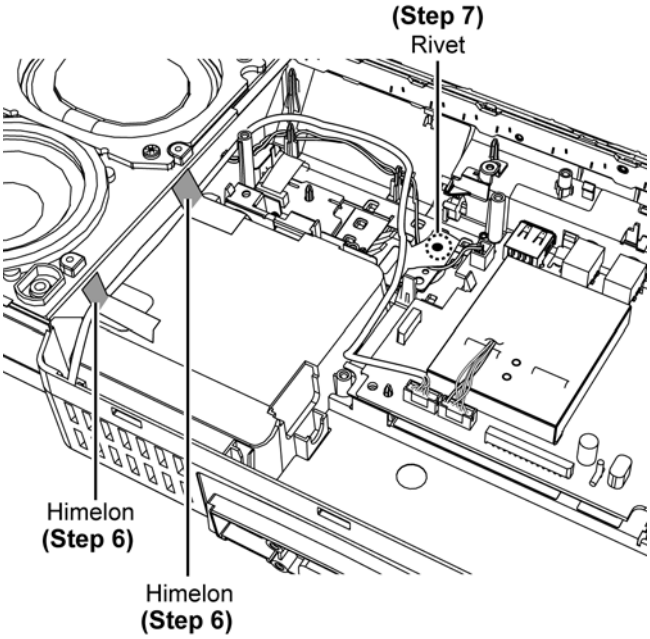

Step 8 : Place back the Panel P.C.B. as shown.

Step 9 : Connect 9P FFC at the connector (CN6801) on Panel P.C.B..

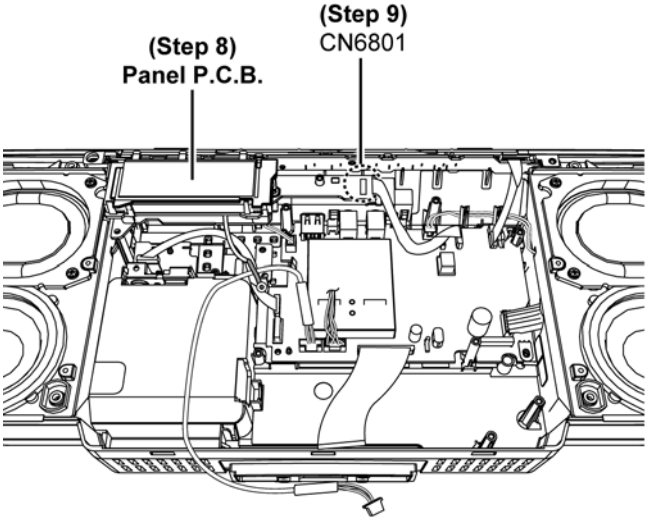

Step 10 : Place the CD Mechanism on the Insulating Material.
Step 11 : Connect 5P wire at the connector (CN7901) on CD Servo P.C.B..
Step 12 : Connect 27P extension cable (RFKZHC55K1) from CN7002 on the Main P.C.B. to CN7002 on the CD Servo P.C.B..

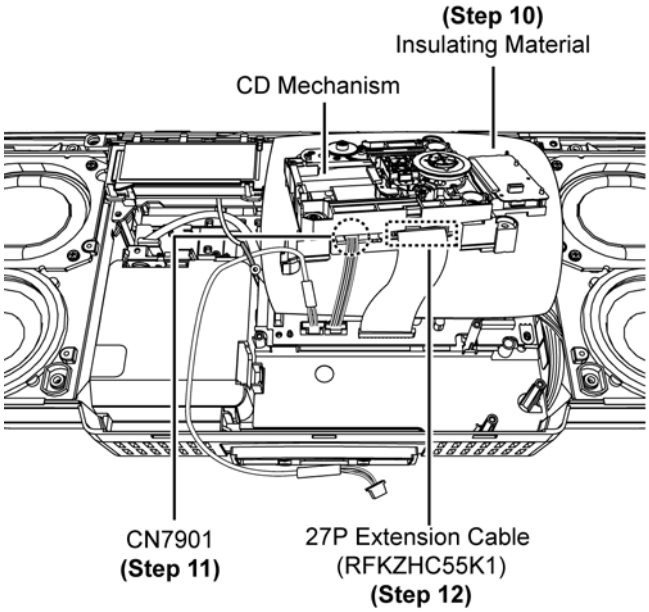

Step 13 : Use a tape to keep the centre switch (S643) depressed.

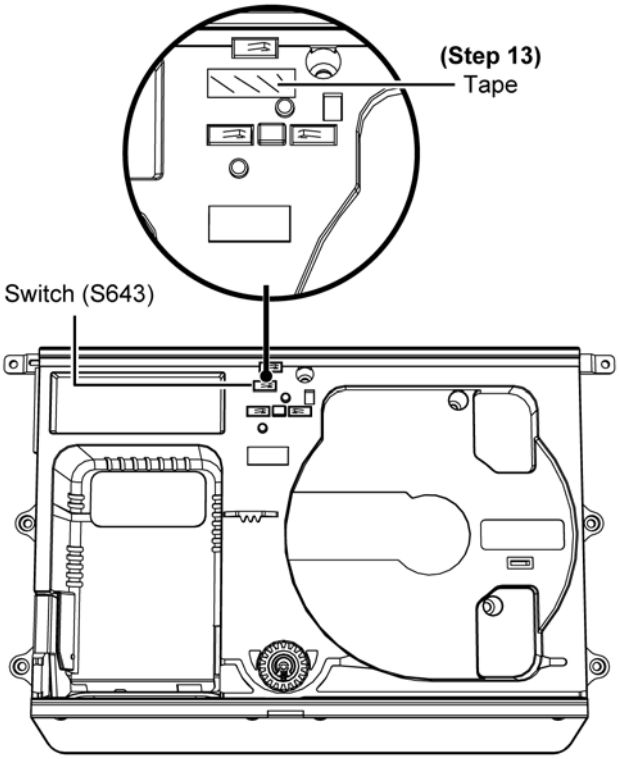

Step 14 : Place the Front Panel Block on the Insulating Material.
Step 15 : Connect 5P Wire at the connector (CN1002) on iPhone P.C.B..
Step 16 : Connect 15P extension cable (RFKZHC55K2) from CN300 on the Remote Sensor P.C.B. to CN303 on the Main P.C.B..

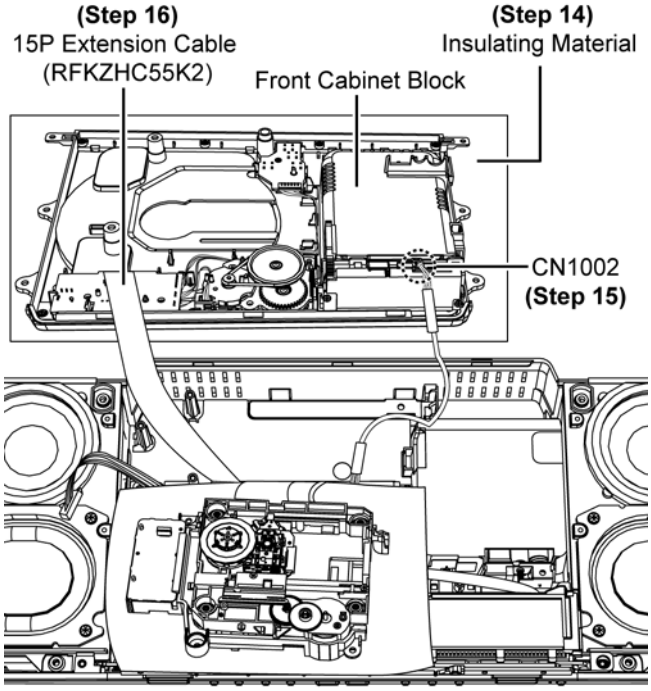

Step 17 : Place the SMPS Assembly on the Insulating Material.
Step 18 : Connect 6P wire at the connector (CN905) on SMPS P.C.B..

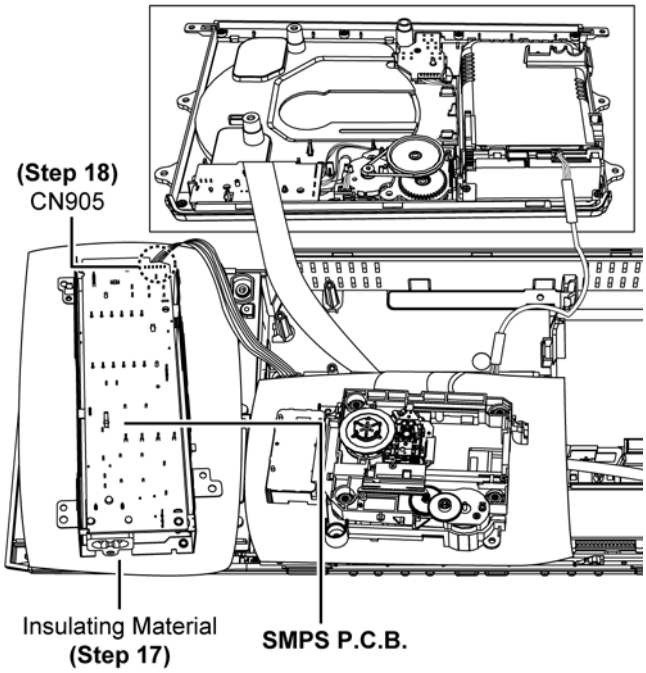

Step 19 : Check and repair SMPS P.C.B. according to the diagram shown.

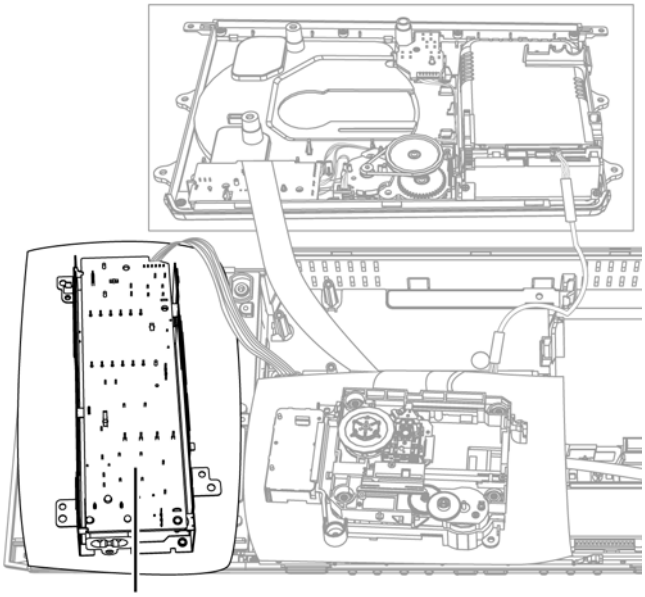

SMPS P.C.B.
(Step 19)

10 Voltage Measurement & Waveform Chart

Note:

- Indicated voltage values are the standard values for the unit measured by the DC electronic circuit tester (high-impedance) with the chassis taken as standard.
  Therefore, there may exist some errors in the voltage values, depending on the internal impedance of the DC circuit tester.
- Circuit voltage and waveform described herein shall be regarded as reference information when probing defect point because it may differ from actual measuring value due to difference of Measuring instrument and its measuring condition and product itself.

10.1. CD SERVO P.C.B.

REF NO.	IC7002																			
MODE	1	2	3	4	5	6	7	8	9	10	11	12	13	14	15	16	17	18	19	20
CD PLAY	1.6	0	3.2	1.6	0	3.3	3.2	7.5	0	0	3.9	3.9	2.7	2.5	2.8	2.5	1.1	3.8	5.1	0

REF NO.	IC7002																			
MODE	21	22	23	24	25	26	27	28	29	30										
CD PLAY	1.5	0	1.1	0	0	1.6	1.6	3.2	0	0										

REF NO.	IC7704																			
MODE	1	2	3	4	5	6	7	8	9	10	11	12	13	14	15	16	17	18	19	20
CD PLAY	3.3	1.5	1.5	0	1.5	1.5	3.3	1.5	1.5	0	1.6	1.5	3.3	3.2	3.2	3.2	3.2	0	3.2	0

REF NO.	IC7704																			
MODE	21	22	23	24	25	26	27	28	29	30	31	32	33	34	35	36	37	38	39	40
CD PLAY	0	1.7	1.8	1.6	3.3	0	1.6	1.6	1.7	1.7	3.2	3.2	0	3.3	0	3.2	0	3.2	1.3	1.4

REF NO.	IC7704																			
MODE	41	42	43	44	45	46	47	48	49	50										
CD PLAY	0	1.3	1.3	3.3	1.3	1.3	0	1.3	1.3	0										

REF NO.	IC7501																			
MODE	1	2	3	4	5	6	7	8	9	10	11	12	13	14	15	16	17	18	19	20
CD PLAY	0	1.8	0	3.3	3.3	0	0	0	0	0	0	3.3	3.3	3.3	0	0	0	0	0	0

REF NO.	IC7851																			
MODE	1	2	3	4	5	6	7	8												
CD PLAY	0	0	0	0	3.2	3.2	0	3.2												

REF NO.	Q7601																			
MODE	E	C	B																	
CD PLAY	3.0	2.0	2.3																	

SC-HC55EG CD SERVO P.C.B.

10.2. MAIN P.C.B. (1/3)

REF NO.	IC700																			
MODE	1	2	3	4	5	6	7	8	9	10	11	12	13	14	15	16				
POWER ON	1.2	3.6	1.2	3.6	3.6	1.2	1.2	1.2	0.5	0.5	3.6	1.2	1.2	3.7	3.7	6.2				
STANDBY	1.2	3.6	1.2	3.6	3.6	1.2	1.2	1.2	0.5	0.5	3.6	1.2	1.2	3.7	3.7	6.2				

REF NO.	IC701																			
MODE	1	2	3	4	5															
POWER ON	7.2	1.2	7.2	1.2	6.2															
STANDBY	7.2	1.2	7.2	1.2	6.2															

REF NO.	IC702																			
MODE	1	2	3	4																
POWER ON	5.2	0	3.3	5.2																
STANDBY	5.2	0	3.3	5.2																

REF NO.	IC800																			
MODE	1	2	3	4	5	6	7	8												
POWER ON	0	0	0	0	0	1.5	0	3.3												
STANDBY	0	0	0	0	0	1.5	0	3.3												

REF NO.	IC801																			
MODE	1	2	3	4	5	6	7	8	9	10	11	12	13	14	15	16	17	18	19	20
POWER ON	0	0	0.5	0.1	3.3	0	3.3	0	3.3	3.2	0	1.5	1.5	0	1.1	1.7	3.3	1.8	3.3	0
STANDBY	0	0	0.5	0.1	3.3	0	3.3	0	3.3	3.2	0	1.5	1.5	0	1.1	1.7	3.3	1.8	3.3	0

REF NO.	IC801																			
MODE	21	22	23	24	25	26	27	28	29	30	31	32	33	34	35	36	37	38	39	40
POWER ON	0	1.1	0	0	3.3	3.3	3.3	3.3	3.2	0	0	0	3.3	3.3	3.3	3.3	1.8	0	0	0
STANDBY	0	1.1	0	0	3.3	3.3	3.3	3.3	3.2	0	0	0	3.3	3.3	3.3	3.3	1.8	0	0	0

REF NO.	IC801																			
MODE	41	42	43	44	45	46	47	48	49	50	51	52	53	54	55	56	57	58	59	60
POWER ON	2.9	3.2	3.3	3.3	3.2	0	0	3.3	0	0	3.3	3.0	0	3.3	0	0	0	0	3.3	3.3
STANDBY	2.9	3.2	3.3	3.3	3.2	0	0	3.3	0	0	3.3	3.0	0	3.3	0	0	0	0	3.3	3.3

REF NO.	IC801																			
MODE	61	62	63	64	65	66	67	68	69	70	71	72	73	74	75	76	77	78	79	80
POWER ON	3.3	0	0	0	0	3.3	0	0	3.2	0	0	0	0	3.3	0	3.3	0	3.3	0	0
STANDBY	3.3	0	0	0	0	3.3	0	0	3.2	0	0	0	0	3.3	0	3.3	0	3.3	0	0

REF NO.	IC801																			
MODE	81	82	83	84	85	86	87	88	89	90	91	92	93	94	95	96	97	98	99	100
POWER ON	0	3.2	0	3.2	3.1	0	3.0	0	3.3	0	0	3.3	0	3.3	3.3	3.3	0	3.3	3.0	3.3
STANDBY	0	3.2	0	3.2	3.1	0	3.0	0	3.3	0	0	3.3	0	3.3	3.3	3.3	0	3.3	3.0	3.3

REF NO.	IC803																			
MODE	1	2	3	4																
POWER ON	3.2	3.3	0	0																
STANDBY	3.2	3.3	0	0																

SC-HC55EG MAIN P.C.B.

10.3. MAIN P.C.B. (2/3)

REF NO.	IC1000																			
MODE	1	2	3	4	5	6	7	8												
POWER ON	11.7	17.1	7.7	0	0.8	1.3	3.3	2.0												
STANDBY	11.7	17.1	7.7	0	0.8	1.3	3.3	2.0												

REF NO.	IC1005																			
MODE	1	2	3	4																
POWER ON	5.0	0	3.3	5.0																
STANDBY	5.0	0	3.3	5.0																

REF NO.	IC1006																			
MODE	1	2	3	4	5	6	7	8												
POWER ON	3.3	0.8	0	0	4.9	0	0	4.9												
STANDBY	3.3	0.8	0	0	4.9	0	0	4.9												

REF NO.	IC1008																			
MODE	1	2	3	4	5															
POWER ON	3.3	0	0	1.8	3.3															
STANDBY	3.3	0	0	1.8	3.3															

REF NO.	IC1009																			
MODE	1	2	3	4	5	6	7	8												
POWER ON	9.8	17.2	5.2	0	0.9	1.5	17.2	2.6												
STANDBY	9.8	17.2	5.2	0	0.9	1.5	17.2	2.6												

REF NO.	IC7901																			
MODE	1	2	3	4	5	6	7	8	9	10	11	12	13	14						
POWER ON	3.1	3.1	0	3.1	0	0	0	0	3.1	3.0	3.1	3.0	0	3.0						

REF NO.	Q1000				Q1001				QR801				QR1000				QR1001			
MODE	S	D	G		E	C	B		E	C	B		E	C	B		S	D	G	
POWER ON	5.2	0	5.2		0	16.9	17.1		0	1.0	0		0	0	3.3		17.1	0	17.1	
STANDBY	5.2	0	5.2		0	16.9	17.1		0	1.0	0		0	0	3.3		17.1	0	17.1	

REF NO.	QR1002																			
MODE	E	C	B																	
POWER ON	0	0	3.2																	
STANDBY	0	3.2	0																	

REF NO.	IC101																			
MODE	1	2	3	4	5	6	7	8	9	10	11	12	13	14	15	16	17	18	19	20
CD PLAY	0	0	0	0	0	1.6	1.2	1.7	1.6	1.8	1.7	0	3.2	0	1.6	1.6	3.3	3.3	3.3	0

REF NO.	IC101																			
MODE	21	22	23	24	25	26	27	28	29	30	31	32	33	34	35	36	37	38	39	40
CD PLAY	0	0	0	0	0	0	0	0	0	0	0	0	0	0	0	0	0	0	0	0

SC-HC55EG MAIN P.C.B.

10.4. MAIN P.C.B. (3/3)

REF NO.	IC101																			
MODE	41	42	43	44	45	46	47	48												
CD PLAY	0	1.8	1.6	1.6	1.2	0	1.6	3.3												

REF NO.	IC102																			
MODE	1	2	3	4	5	6	7	8	9	10	11	12	13	14	15	16				
CD PLAY	3.5	3.5	3.1	3.5	1.1	5.9	3.1	0	0.5	0.5	1.6	0.5	0.4	3.1	2.4	0				

REF NO.	IC2002																			
MODE	1	2	3	4	5	6	7	8	9	10	11	12	13	14						
CD PLAY	3.3	1.4	1.6	0	1.6	1.6	0	0	0	0	0	0	0	3.3						
STANDBY	3.3	1.4	1.6	0	1.6	1.6	0	0	0	0	0	0	0	3.3						

REF NO.	IC2003																			
MODE	1	2	3	4	5	6	7	8	9	10	11	12	13	14						
CD PLAY	1.8	0.6	1.8	1.8	0.6	1.8	0	0	0	0	3.1	3.1	0.6	3.3						
STANDBY	1.8	0.6	1.8	1.8	0.6	1.8	0	0	0	0	3.1	3.1	0.6	3.3						

REF NO.	IC8000																			
MODE	1	2	3	4	5	6	7	8	9	10	11	12	13	14	15	16				
CD PLAY	0	1.2	0.8	1.2	1.6	1.6	1.6	0	1.6	1.7	1.6	0	0	0	0	3.3				

REF NO.	Q950				Q951							Q952								
MODE	E	C	B		1	2	3	4	5	6		1	2	3	4	5	6			
CD PLAY	1.4	1.1	0.7		0	0.7	0	0	0.7	0		0	0.7	0	0	0.7	0			
STANDBY	1.4	1.1	0.7		0	0.7	0	0	0.7	0		0	0.7	0	0	0.7	0			

REF NO.	QR100				QR2000															
MODE	E	C	B		E	C	B													
CD PLAY	0	0	3.2		0	0	3.3													
STANDBY	0	0	3.2		0	0	3.3													

REF NO.	IC100																			
MODE	1	2	3	4	5	6	7	8												
BLUETOOTH	2.4	2.5	2.3	0	2.5	2.5	2.5	5.0												
STANDBY	2.4	2.5	2.3	0	2.5	2.5	2.5	5.0												

REF NO.	Q7001				Q7900				Q7901				Q7902				Q7903			
MODE	E	C	B		E	C	B		E	C	B		S	D	G		E	C	B	
iPod PLAY	3.3	3.2	2.5		0	3.0	0		0	0	3.1		5.2	5.1	0		0	3.0	0	
STANDBY	3.3	3.2	2.5		0	3.0	0		0	0	3.1		5.2	5.1	0		0	3.0	0	

REF NO.	QR7900																			
MODE	E	C	B																	
iPod PLAY	0	5.1	3.3																	
STANDBY	0	5.1	0																	

SC-HC55EG MAIN P.C.B.

10.5. PANEL P.C.B.

REF NO.	IC6801																			
MODE	1	2	3	4	5	6	7	8	9	10	11	12	13	14	15	16	17	18	19	20
POWER ON	0	0	0	0	1.9	3.3	0	0	1.5	0	0	0	3.3	-26.8	-26.8	-24.5	-15.4	-17.7	-20.0	-24.6
STANDBY	0	0	0	0	1.9	3.3	0	0	1.5	0	0	0	3.3	-26.8	-26.8	-24.5	-15.4	-17.7	-20.0	-24.6

REF NO.	IC6801																			
MODE	21	22	23	24	25	26	27	28	29	30	31	32	33	34	35	36	37	38	39	40
POWER ON	-24.5	-24.6	-20.0	-22.3	-26.8	-24.6	-26.8	-20.0	-20.0	-27.4	-15.6	-25.1	-24.8	-24.6	-24.5	-24.5	-24.5	-24.5	-24.5	-24.5
STANDBY	-24.5	-24.6	-20.0	-22.3	-26.8	-24.6	-26.8	-20.0	-20.0	-27.4	-15.6	-25.1	-24.8	-24.6	-24.5	-24.5	-24.5	-24.5	-24.5	-24.5

REF NO.	IC6801																			
MODE	41	42	43	44																
POWER ON	-24.5	-24.5	3.3	0																
STANDBY	-24.5	-24.5	3.3	0																

SC-HC55EG PANEL P.C.B.

10.6. SMPS P.C.B.

REF NO.	IC700																			
MODE	1	2	3	4	5	6	7	8												
POWER ON	20.2	0	0.6	0	1.6	0.7	1.5	0												
STANDBY	20.2	0	0.6	0	1.6	0.7	1.5	0												

REF NO.	IC701																			
MODE	1	2	3	4																
POWER ON	0	0	14.5	2.5																
STANDBY	0	0	14.5	2.5																

REF NO.	Q701																			
MODE	S	D	G																	
POWER ON	0	0.6	168.1																	
STANDBY	0	0.6	168.1																	

SC-HC55EG SMPS P.C.B.

10.7. TUNER P.C.B.

REF NO.	IC52																			
MODE	1	2	3	4	5	6	7	8	9	10	11	12	13	14	15	16	17	18	19	20
TUNER	0	1.5	0	3.0	0	3.1	3.3	3.3	3.3	3.3	3.3	0	3.3	3.3	0	0	3.3	0	0	0

SC-HC55EG TUNER P.C.B.

10.8. BUTTON P.C.B.

REF NO.	IC3001																			
MODE	1	2	3	4	5	6	7	8												
POWER ON	0	3.3	0	0	3.3	3.3	3.3	2.0												
STANDBY	0	3.3	0	0	3.3	3.3	3.3	2.0												

REF NO.	Q902				Q904				Q3001				Q3002				QR3001			
MODE	E	C	B		E	C	B		S	D	G		S	D	G		E	C	B	
POWER ON	0	2.5	1.6		0	0.2	3.2		3.1	2.0	1.6		3.2	2.0	1.6		0	1.6	1.6	
STANDBY	0	2.5	1.6		0	0.2	3.2		3.1	2.0	1.6		3.2	2.0	1.6		0	1.6	1.6	

SC-HC55EG BUTTON P.C.B.

10.9. REMOTE SENSOR P.C.B.

REF NO.	IC320																			
MODE	1	2	3	4	5	6	7	8												
POWER ON	8.9	9.0	8.9	0	8.9	8.9	8.9	9.0												
STANDBY	8.9	9.0	8.9	0	8.9	8.9	8.9	9.0												

REF NO.	Q320				QR805															
MODE	E	C	B		E	C	B													
POWER ON	0	8.9	0		0	0	0													
STANDBY	0	0	3.3		0	0	3.3													

SC-HC55EG REMOTE SENSOR P.C.B.

10.10. Waveform Chart

WF No. IC52-2,13,14 (TUNER) 0.1Vp-p(200usec/div)	WF No. IC101-15 (PLAY) 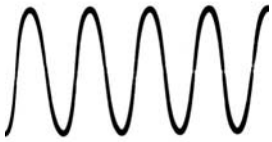 6.4Vp-p(20nsec/div)	WF No. IC101-16 (PLAY) 2.2Vp-p(20nsec/div)	WF No. IC801-12 (PLAY) 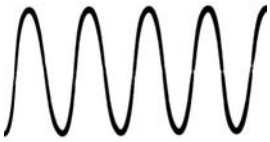 3.8Vp-p(50nsec/div)
WF No. IC801-13 (PLAY) 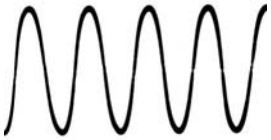 3Vp-p(50nsec/div)	WF No. IC801-15 (PLAY) 1.1Vp-p(10usec/div)	WF No. IC801-16 (PLAY) 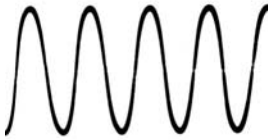 2.1Vp-p(10usec/div)	WF No. IC2000-1 (PLAY) 1.4Vp-p(5usec/div)
WF No. IC2000-6 (PLAY) 2.8Vp-p(5usec/div)	WF No. IC2003-11 (PLAY) 1.2Vp-p(200usec/div)	WF No. IC2003-12 (PLAY) 1.5Vp-p(200usec/div)	

11 Illustration of IC's, Transistors and Diodes

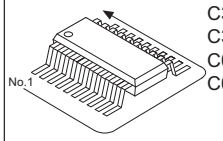	C0JBAR000587 (16P) C0JBAU000036 (14P) C3ABMY000027 (50P) C3EBFC000042 (8P) C0JBAR000596 (16P) C0JBAR000586 (14P)	C0DBEYY00123 (8P) C0DBAYY01077 (8P) C0DBAYY00462 (8P) C0DBGYY00887 (4P) C0DBZMC00006 (4P) C0DBZYY00448 (8P) C0FBAK000026 (16P) C0JBAE000438 (14P)	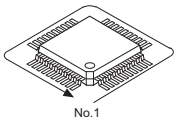	MFI341S2164 (20P) MN6627947RB (144P) C2HBCY000072 (48P) RFKWMHC55M0 (100P) C0HBB0000057 (44P)	C0GBY0000117 (30P) 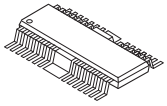
C1ZBZ0004386 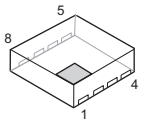	C0EBE0000434 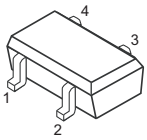	C3EBFY000006 C0DBZYY00448 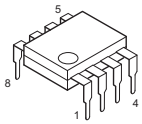	VUEALLPT039 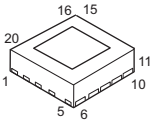	C1AB00003600 (48P) 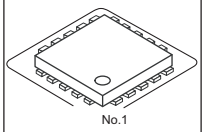	C0ABBA000159 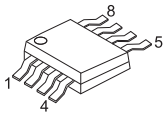
C0CBCDC00052 C0CBCAC00358 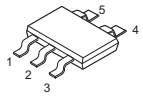	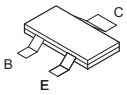	B1ADCF000001 B1GBCFJN0038 B1ADCE000012 B1ABCF000176 B1DHCC000034	B1BABK000001 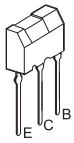	B1KAB0000021 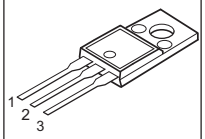	B1GFGCAA0001 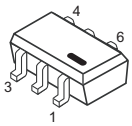
B3AEA0000129 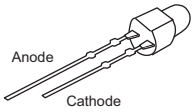	B0ACMQ000002 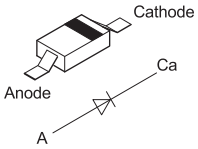	B0BC5R6A0266 B0ACCK000012 B0JCMD000066 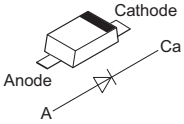	B0BC02900004 B0BC027A0264 B0BC3R0A0262 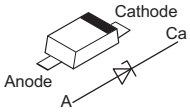	B0HCMM000019 B0ECKM000016 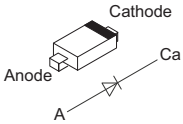	B0JCME000035 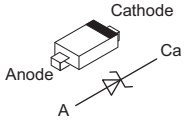
B0EBNR000045 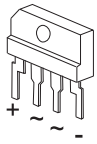	B0ABSM000008 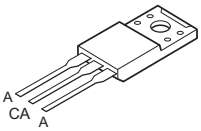	B0JAME000114 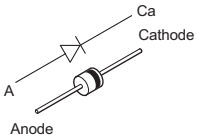	B0EAMM000057 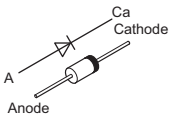	B3AAB0000038 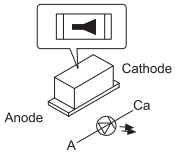	LNJ926W8CRA 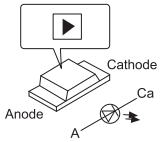
B3EB00000058 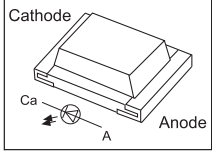					

12 Overall Simplified Block

12.1. Voltage / Current / Ground Diagram

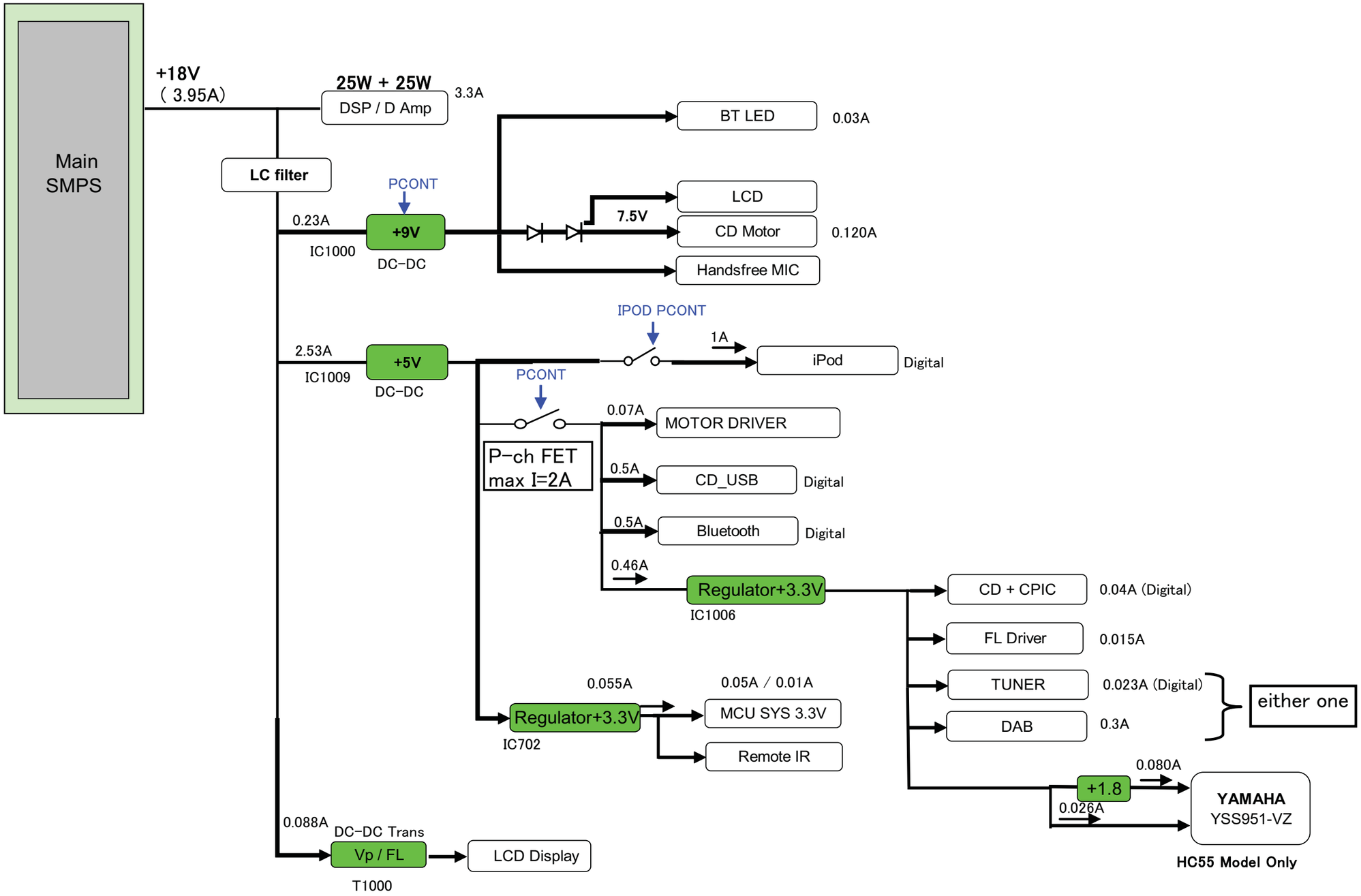

12.2. Control & Signal Diagram

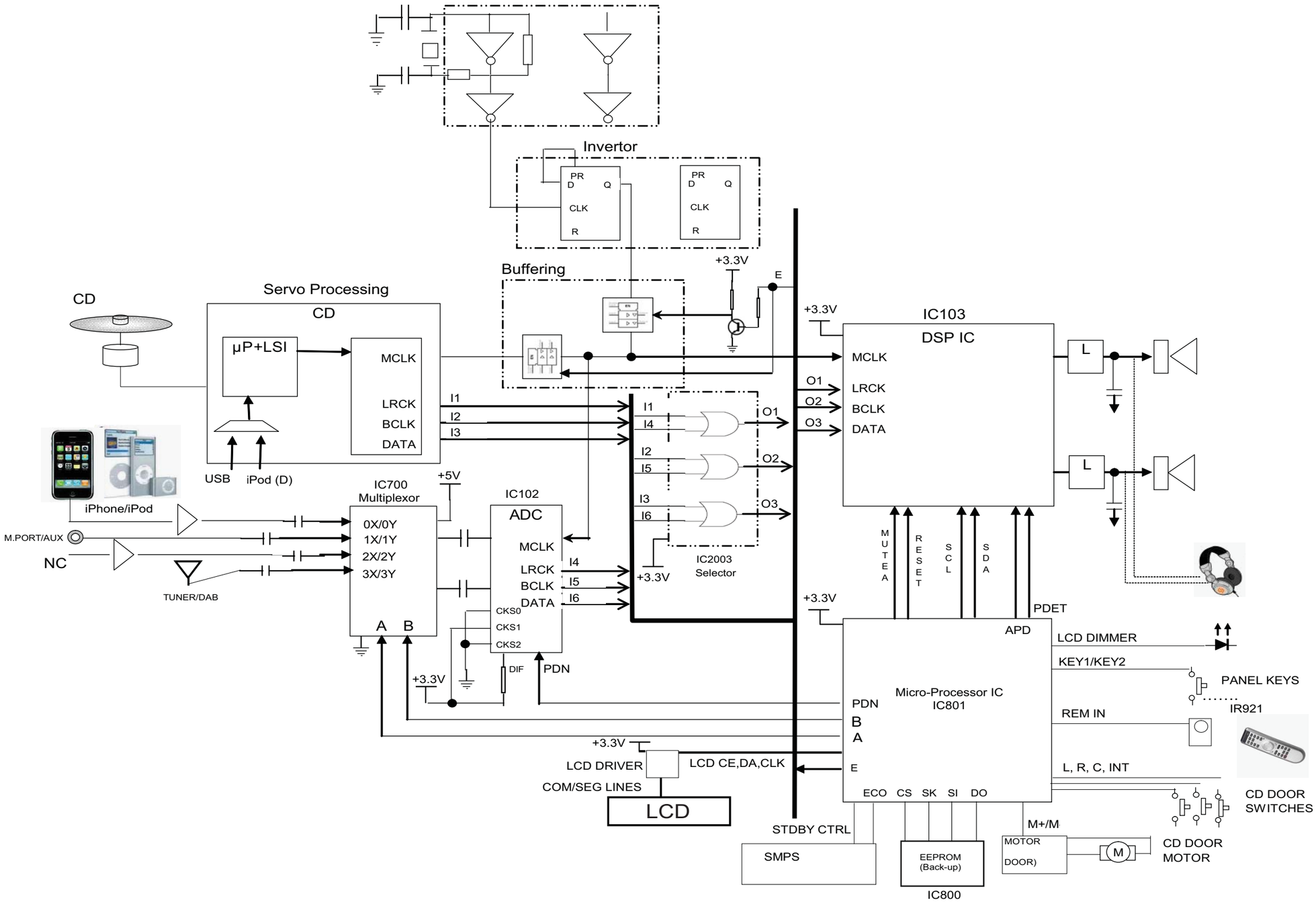

13 Block Diagram

13.1. SERVO & SYSTEM CONTROL (1/2) BLOCK DIAGRAM

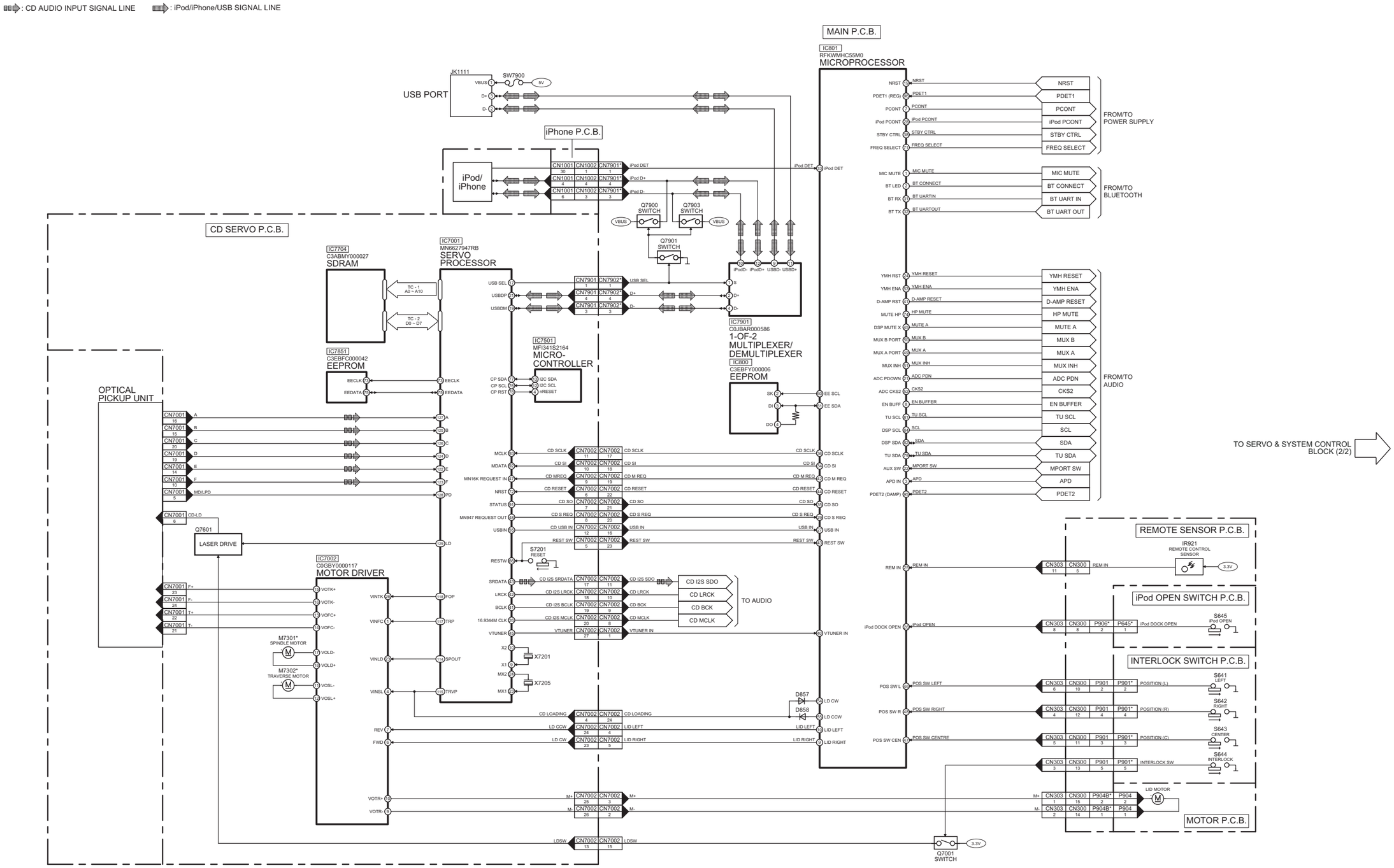

NOTE: " * " REF IS FOR INDICATION ONLY

SC-HC55EG SERVO & SYSTEM CONTROL (1/2) BLOCK DIAGRAM

13.2. SERVO & SYSTEM CONTROL (2/2) BLOCK DIAGRAM

: CD AUDIO INPUT SIGNAL LINE : iPod/iPhone/USB SIGNAL LINE

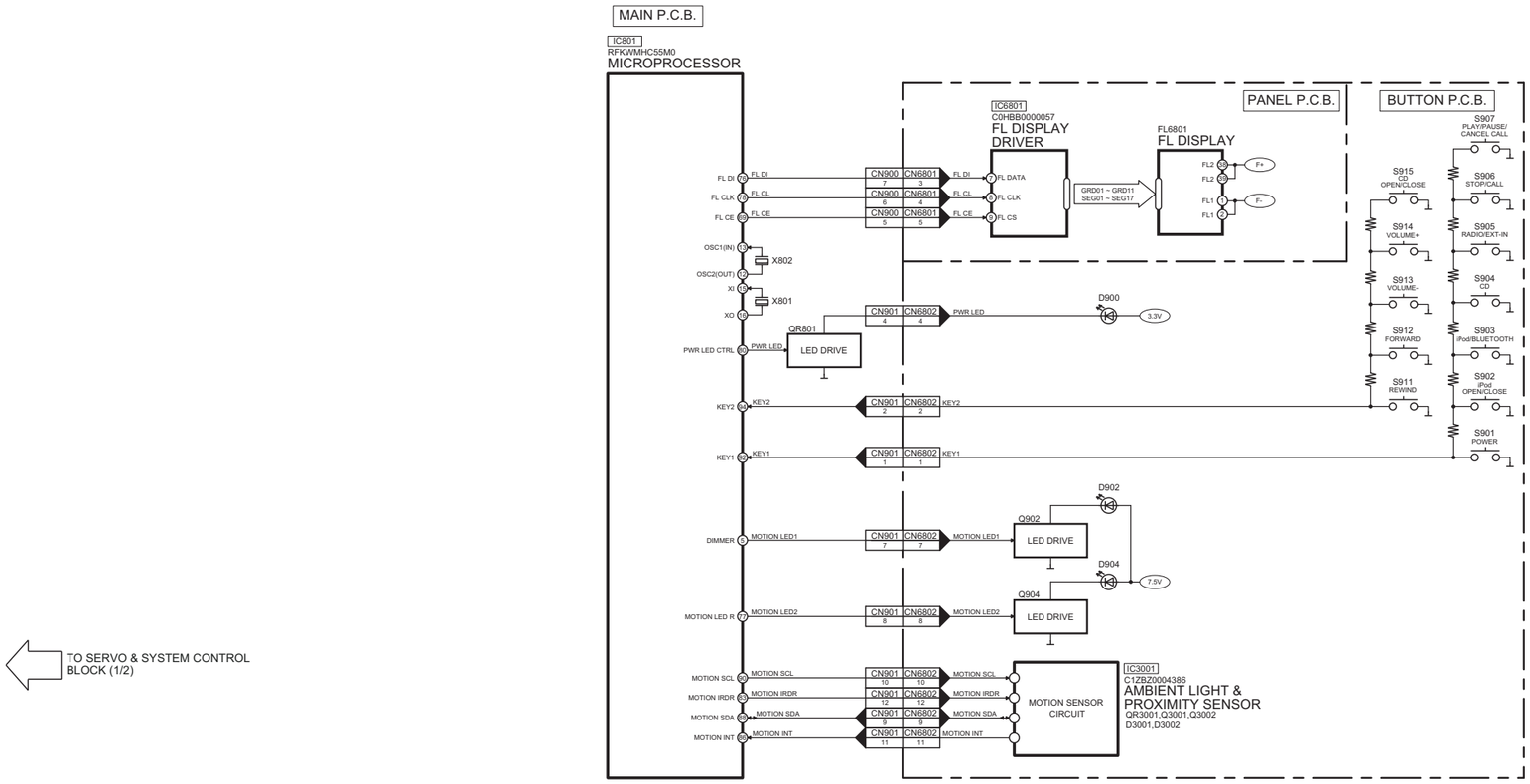

SC-HC55EG SERVO & SYSTEM CONTROL (2/2) BLOCK DIAGRAM

13.3. IC TERMINAL CHART

TC	IC7704 SDRAM		SIGNAL NAME	IC7001 SERVO PROCESSOR	
	PORT NAME	PIN NO		PIN NO	PORT NAME
1	A0	21	A0	35	A0
	A1	22	A1	34	A1
	A2	23	A2	33	A2
	A3	24	A3	112	A3
	A4	27	A4	111	A4
	A5	28	A5	110	A5
	A6	29	A6	109	A6
	A7	30	A7	108	A7
	A8	31	A8	107	A8
	A9	32	A9	106	A9
	A10	20	A10	36	A10

TC	IC7704 SDRAM		SIGNAL NAME	IC7001 SERVO PROCESSOR	
	PORT NAME	PIN NO		PIN NO	PORT NAME
2	DQ0 / DQ15	2 / 49	D0	102	D0
	DQ1 / DQ14	3 / 48	D1	101	D1
	DQ2 / DQ13	5 / 46	D2	100	D2
	DQ3 / DQ12	6 / 45	D3	99	D3
	DQ4 / DQ11	8 / 43	D4	98	D4
	DQ5 / DQ10	9 / 42	D5	97	D5
	DQ6 / DQ9	11 / 40	D6	96	D6
	DQ7 / DQ8	12 / 39	D7	95	D7

13.4. BLUETOOTH BLOCK DIAGRAM

: MIC/BLUETOOTH AUDIO INPUT SIGNAL LINE

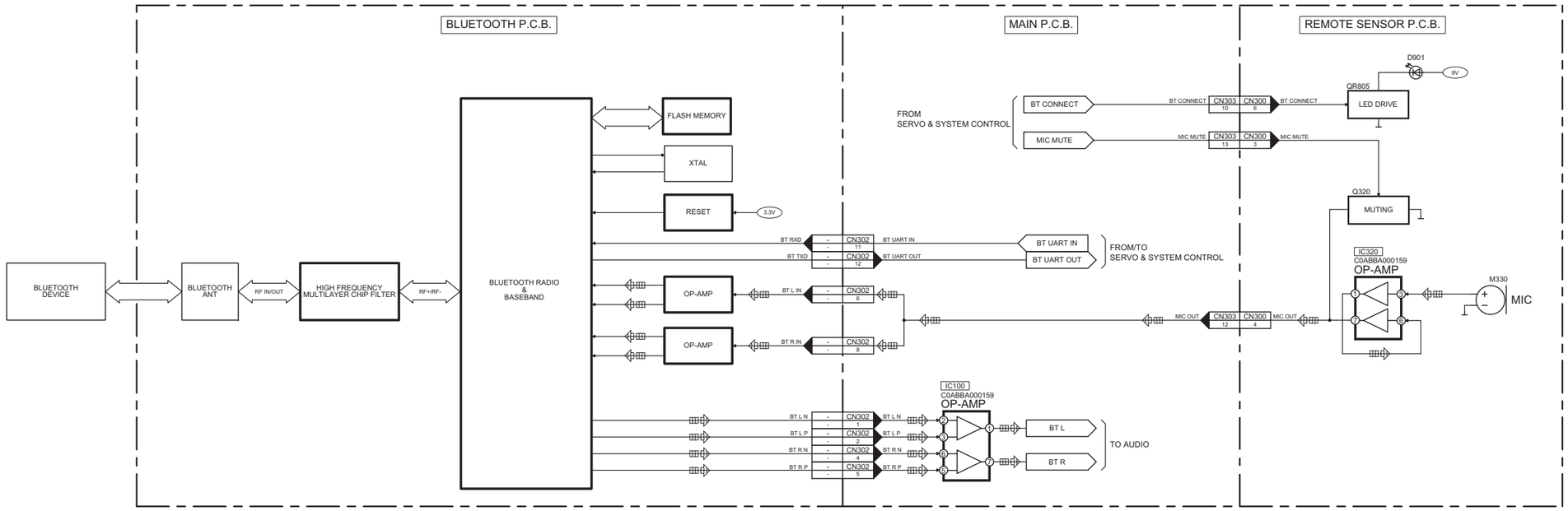

SC-HC55EG BLUETOOTH BLOCK DIAGRAM

13.5. AUDIO BLOCK DIAGRAM

: CD AUDIO INPUT SIGNAL LINE : AUX/TUNER/BLUETOOTH AUDIO INPUT SIGNAL LINE : AUDIO OUTPUT SIGNAL LINE : AM SIGNAL LINE : FM SIGNAL LINE

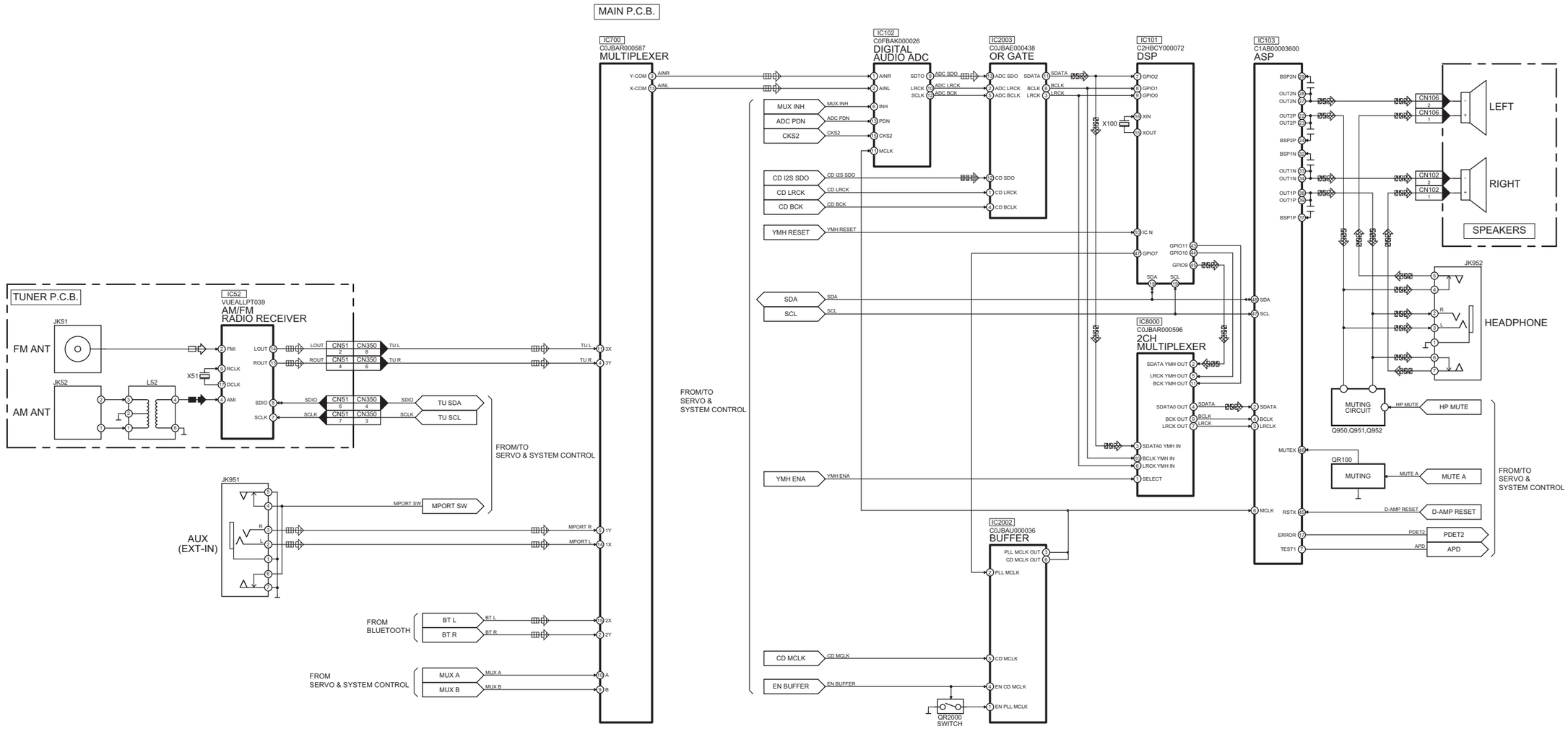

SC-HC55EG AUDIO BLOCK DIAGRAM

13.6. POWER SUPPLY (1/2) BLOCK DIAGRAM

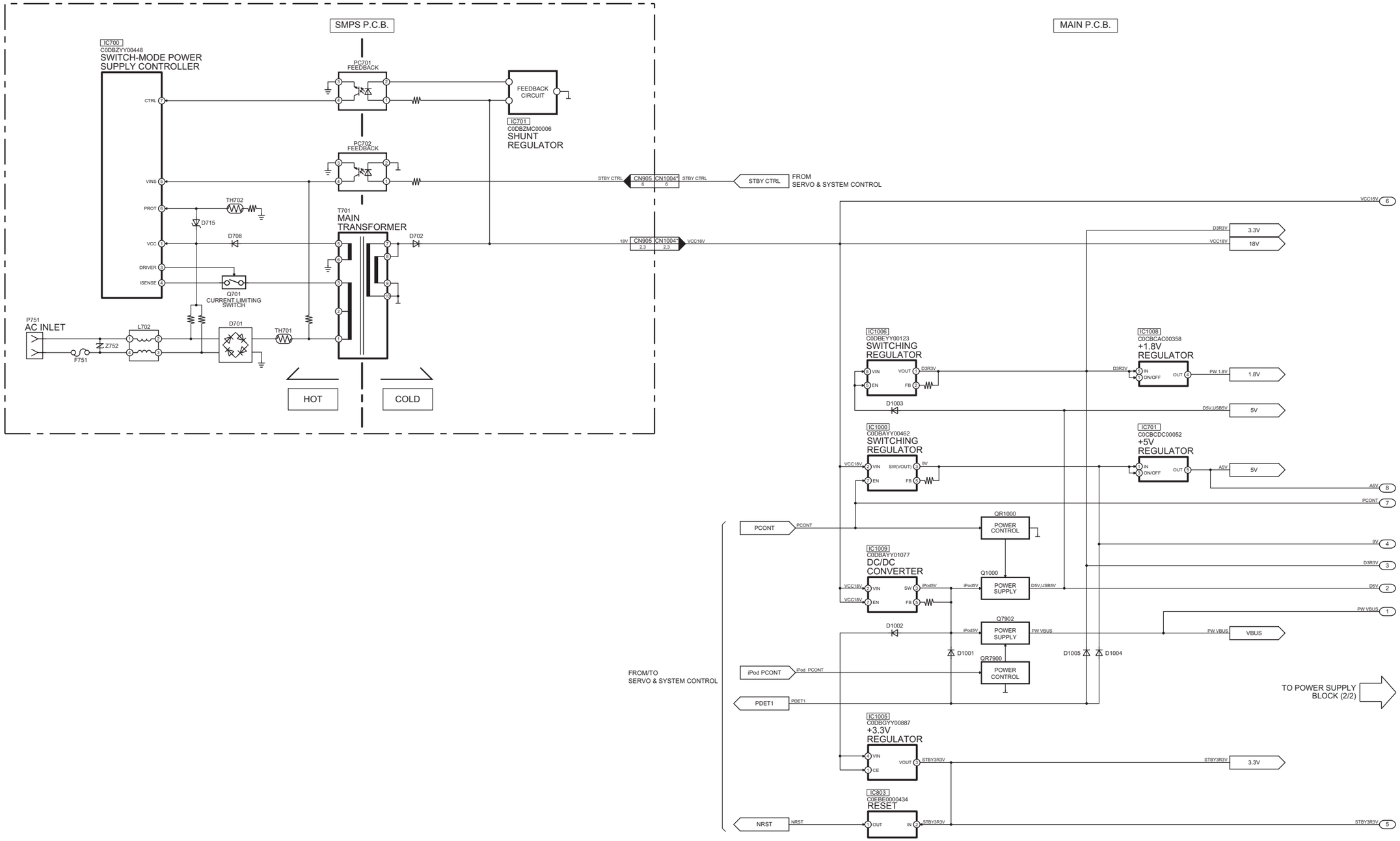

NOTE: " * " REF IS FOR INDICATION ONLY

SC-HC55EG POWER SUPPLY (1/2) BLOCK DIAGRAM

13.7. POWER SUPPLY (2/2) BLOCK DIAGRAM

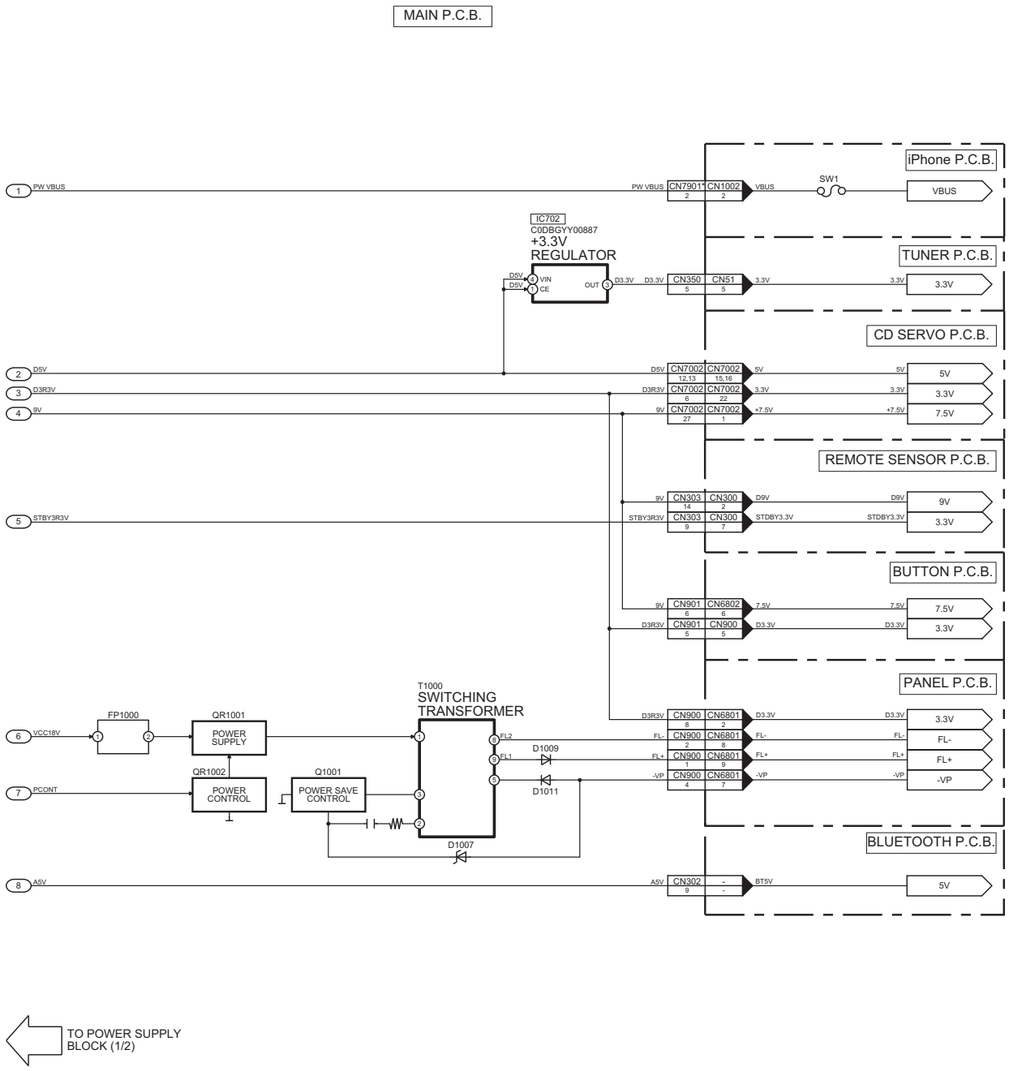

NOTE: “ * ” REF IS FOR INDICATION ONLY

SC-HC55EG POWER SUPPLY (2/2) BLOCK DIAGRAM

14 Wiring Connection Diagram

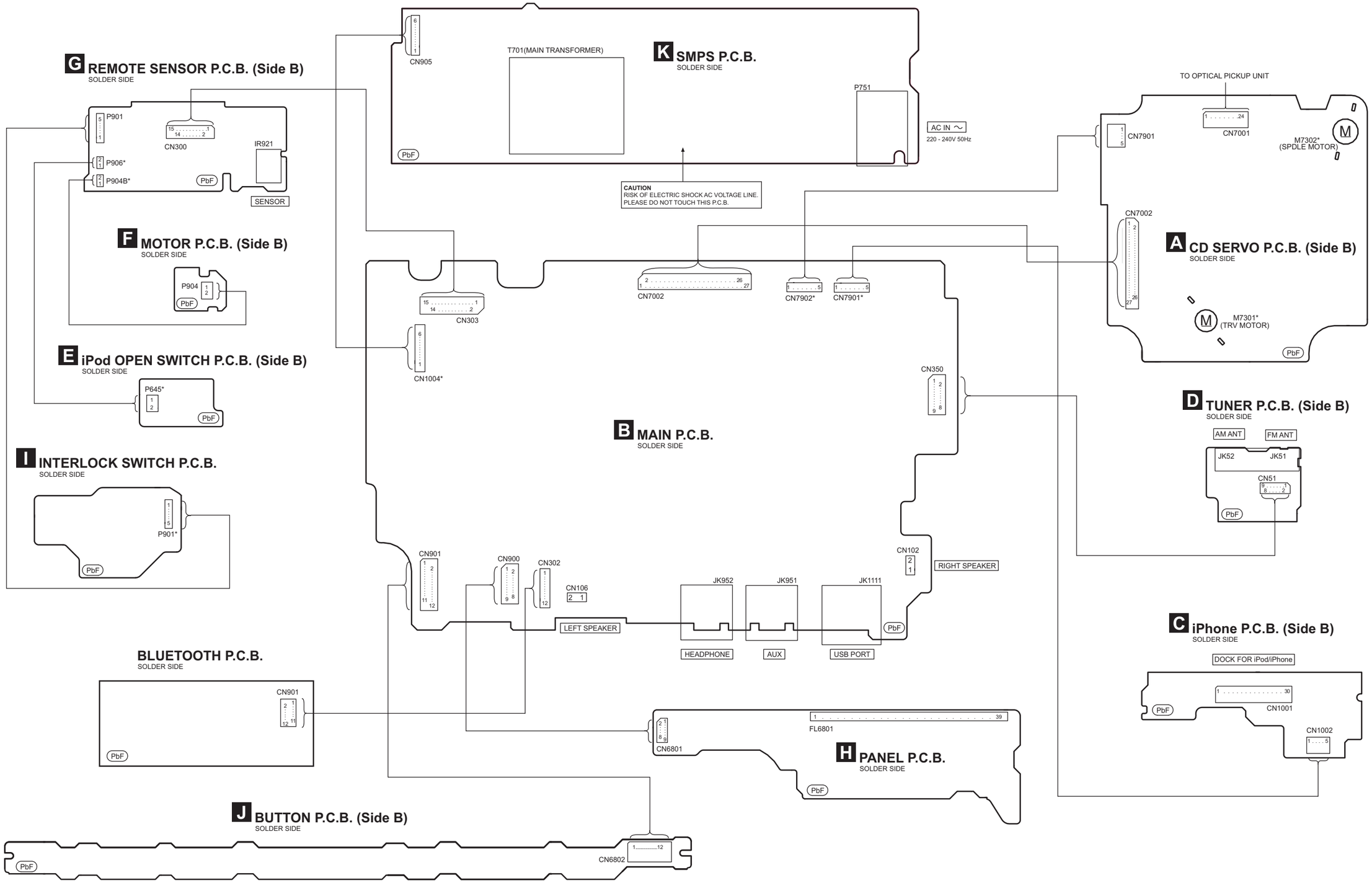

Note : “ * ” REF IS FOR INDICATION ONLY.

15 Schematic Diagram

15.1. Schematic Diagram Notes

(All schematic diagrams may be modified at any time with the development of new technology)

Notes:

S641:	LEFT switch.
S642:	RIGHT switch.
S643:	CENTRE switch.
S644:	INTERLOCK switch.
S645:	switch.
S901:	POWER switch (POWER ⏻/I).
S902:	IPOD OPEN/CLOSE switch.
S903:	IPOD switch.
S904:	CD switch.
S905:	RADIO/AUX switch.
S906:	STOP/CALL switch (■).
S907:	PLAY/PAUSE/CANCEL CALL switch (▶/❚❚).
S911:	REV SKIP switch (|◀◀/◀◀).
S912:	FWD SKIP switch (▶▶/▶▶|).
S913:	VOL- switch.
S914:	VOL+ switch.
S915:	CD OPEN/CLOSE switch (CD ⏏).
S7201:	REST switch.

- Important safety notice:
  Components identified by ⚠ mark have special characteristics important for safety.
  Furthermore, special parts which have purposes of fire-retardant (resistors), high quality sound (capacitors), low-noise (resistors), etc are used.
  When replacing any of components, be sure to use only manufacturer's specified parts shown in the parts list.

- In case of AC rated voltage Capacitors, the part no. and values will be indicated in the Schematic Diagram.
  AC rated voltage capacitors:
  C702, C710, C725, C727, C728

- **Resistor**
  Unit of resistance is OHM [Ω] (K=1,000, M=1,000,000).

- **Capacitor**
  Unit of capacitance is μF, unless otherwise noted. F=Farads, pF=pico-Farad.

- **Coil**
  Unit of inductance is H, unless otherwise noted.

- *****
  REF IS FOR INDICATION ONLY.

- Voltage and signal line

▬▬	: +B Signal Line
------	: -B Signal Line
	: CD Audio Input Signal Line
	:Tuner/Bluetooth/AUX/MIC Audio Input SIGNAL LINE
	: Audio Output Signal Line
	: iPod/iPhone/USB SIGNAL LINE
	: FM SIGNAL LINE
	: AM SIGNAL LINE

CAUTION: FOR CONTINUED PROTECTION AGAINST FIRE HAZARD, REPLACE ONLY WITH SAME TYPE F751 T3.15A, 250V FUSE

RISK OF FIRE-REPLACE FUSE AS MARKED.

FUSE CAUTION

These symbols located near the fuse indicates that the fuse used is a fast operating type. For continued protection against fire harzard, replace with the same type fuse. For fuse rating, refer to the marking adjacent to the symbol.

15.2. CD SERVO CIRCUIT (1/2)

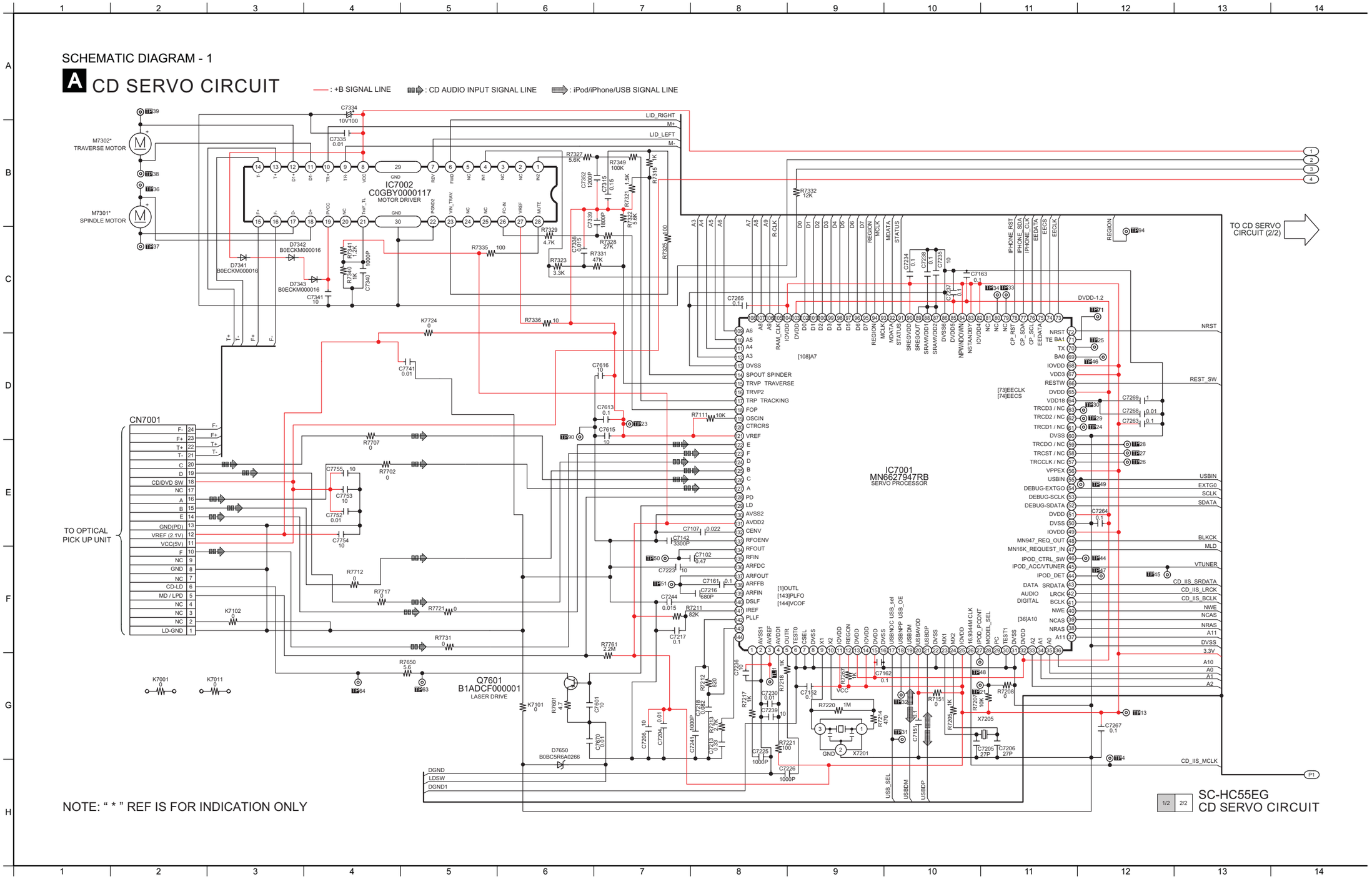

15.3. CD SERVO CIRCUIT (2/2)

SCHEMATIC DIAGRAM - 2

A CD SERVO CIRCUIT

: +B SIGNAL LINE : CD AUDIO INPUT SIGNAL LINE : iPod/iPhone/USB SIGNAL LINE

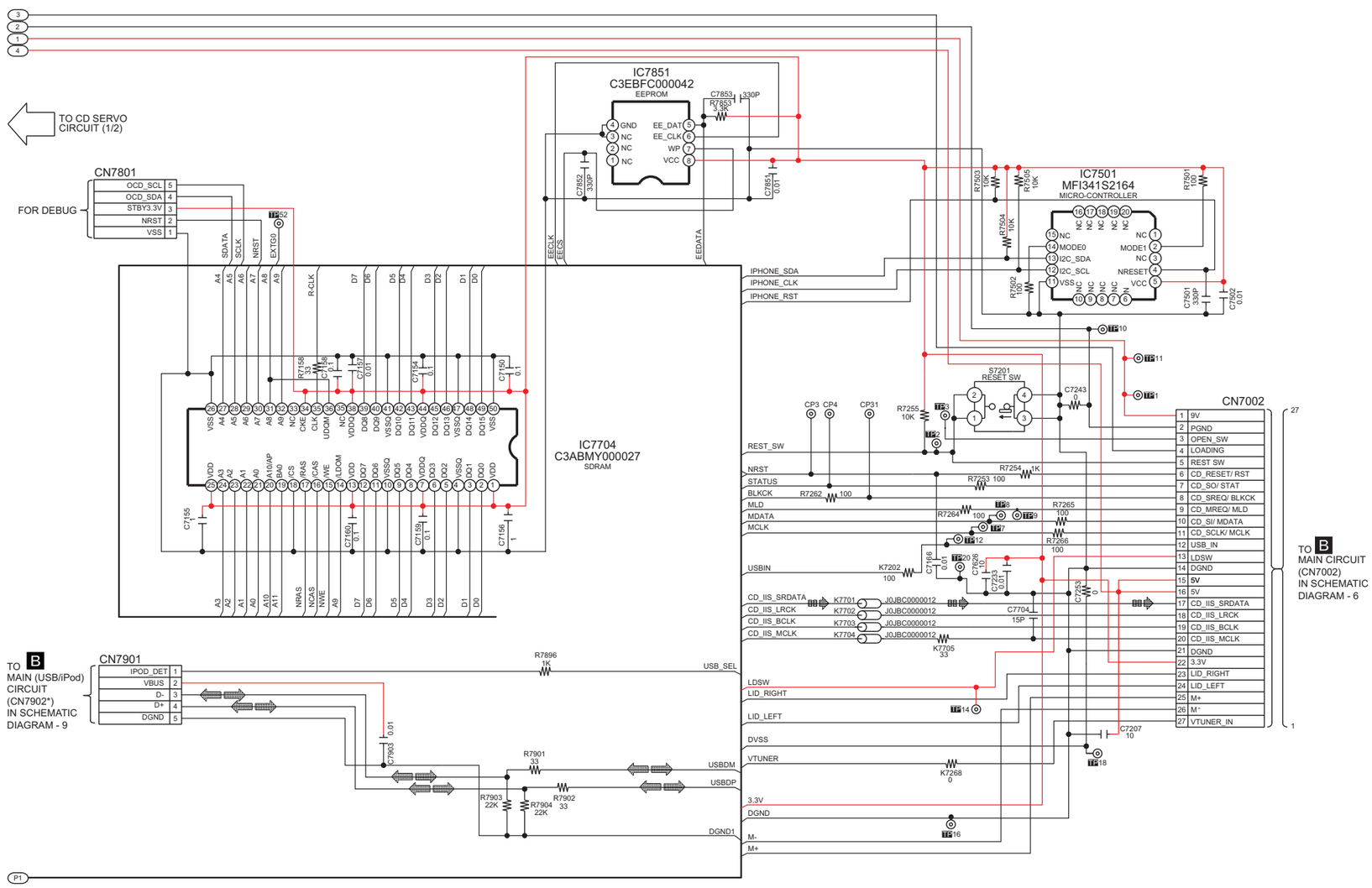

SC-HC55EG
CD SERVO CIRCUIT

15.4. MAIN CIRCUIT (1/4)

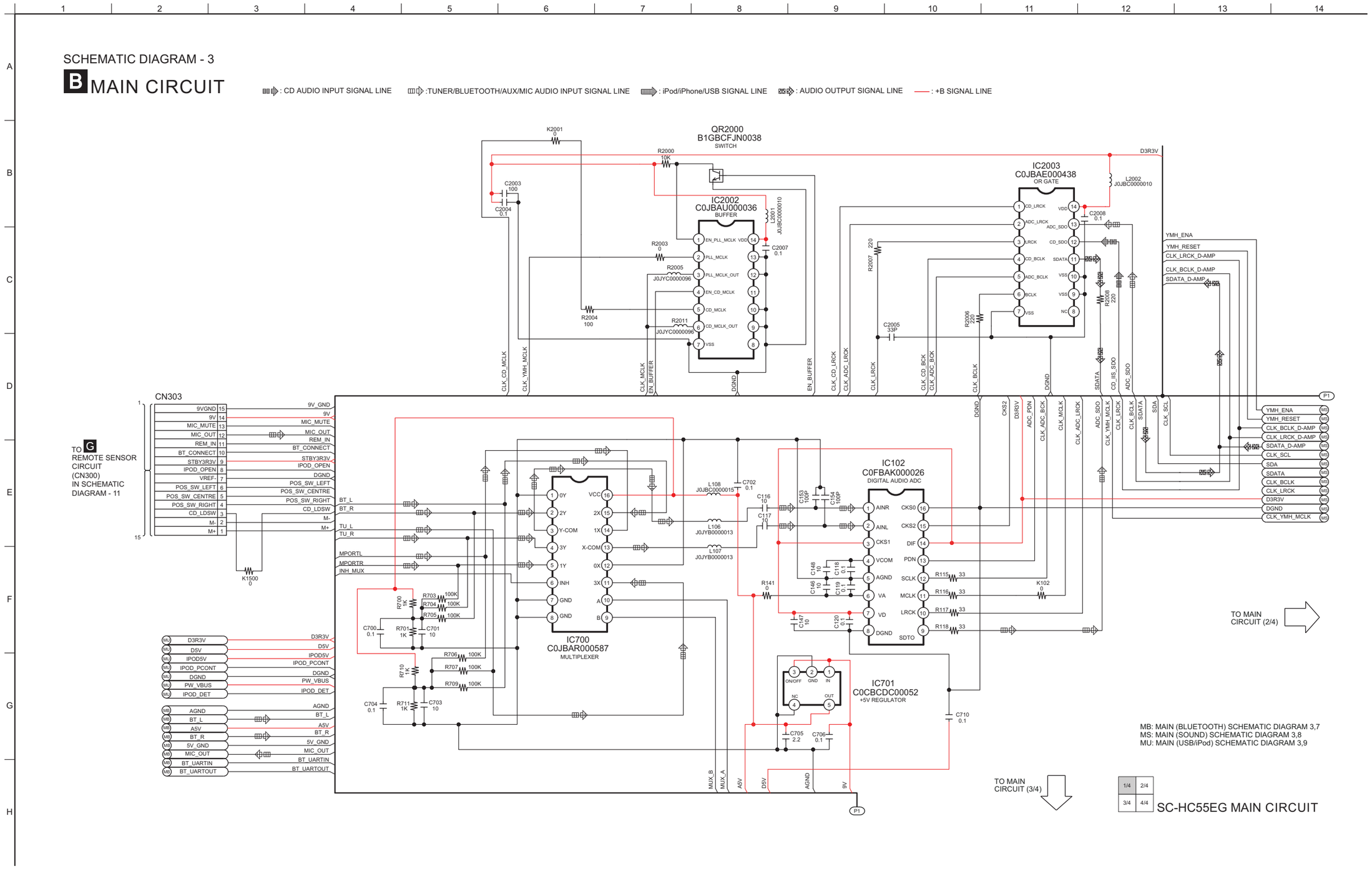

15.5. MAIN CIRCUIT (2/4)

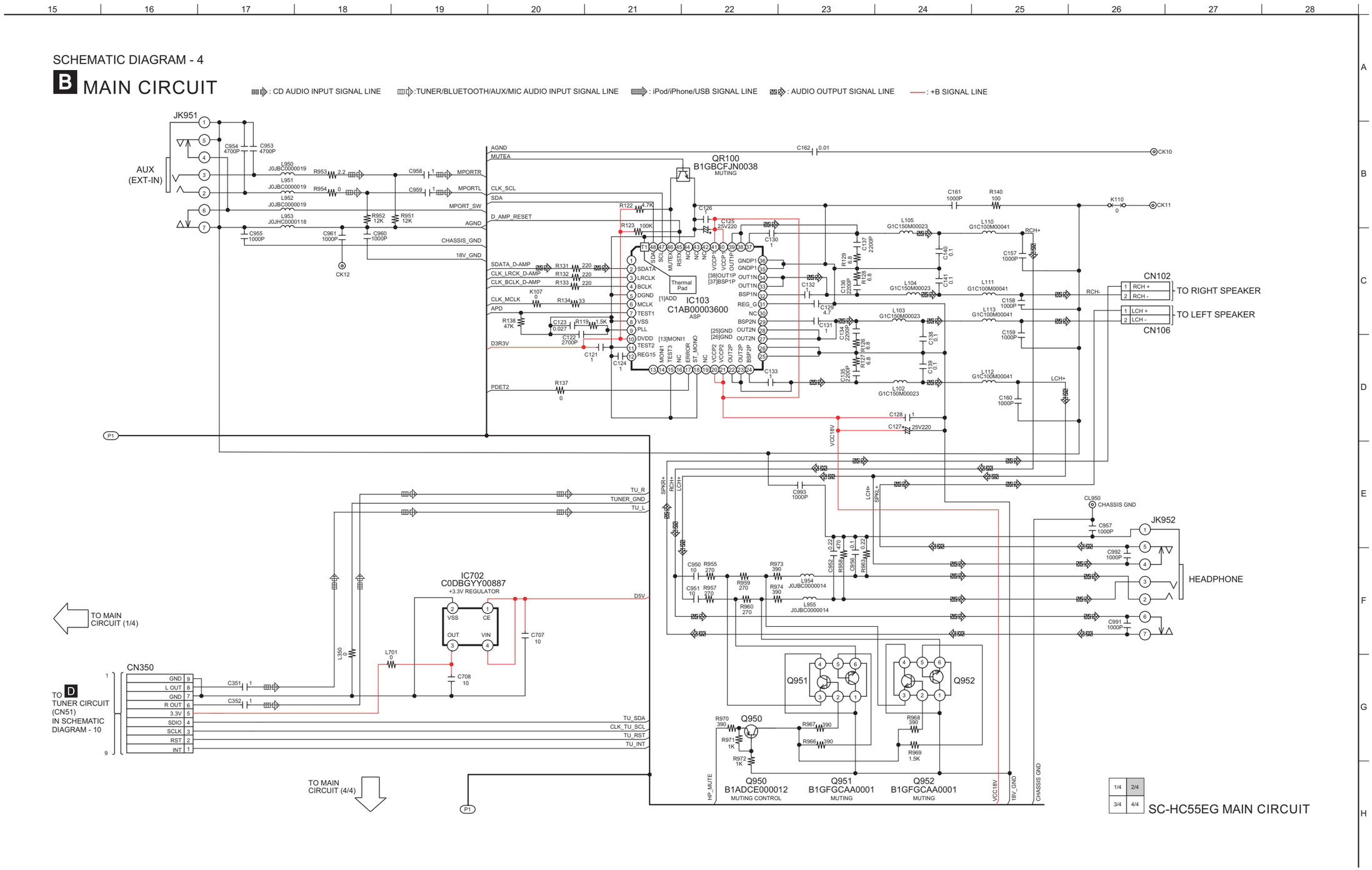

15.6. MAIN CIRCUIT (3/4)

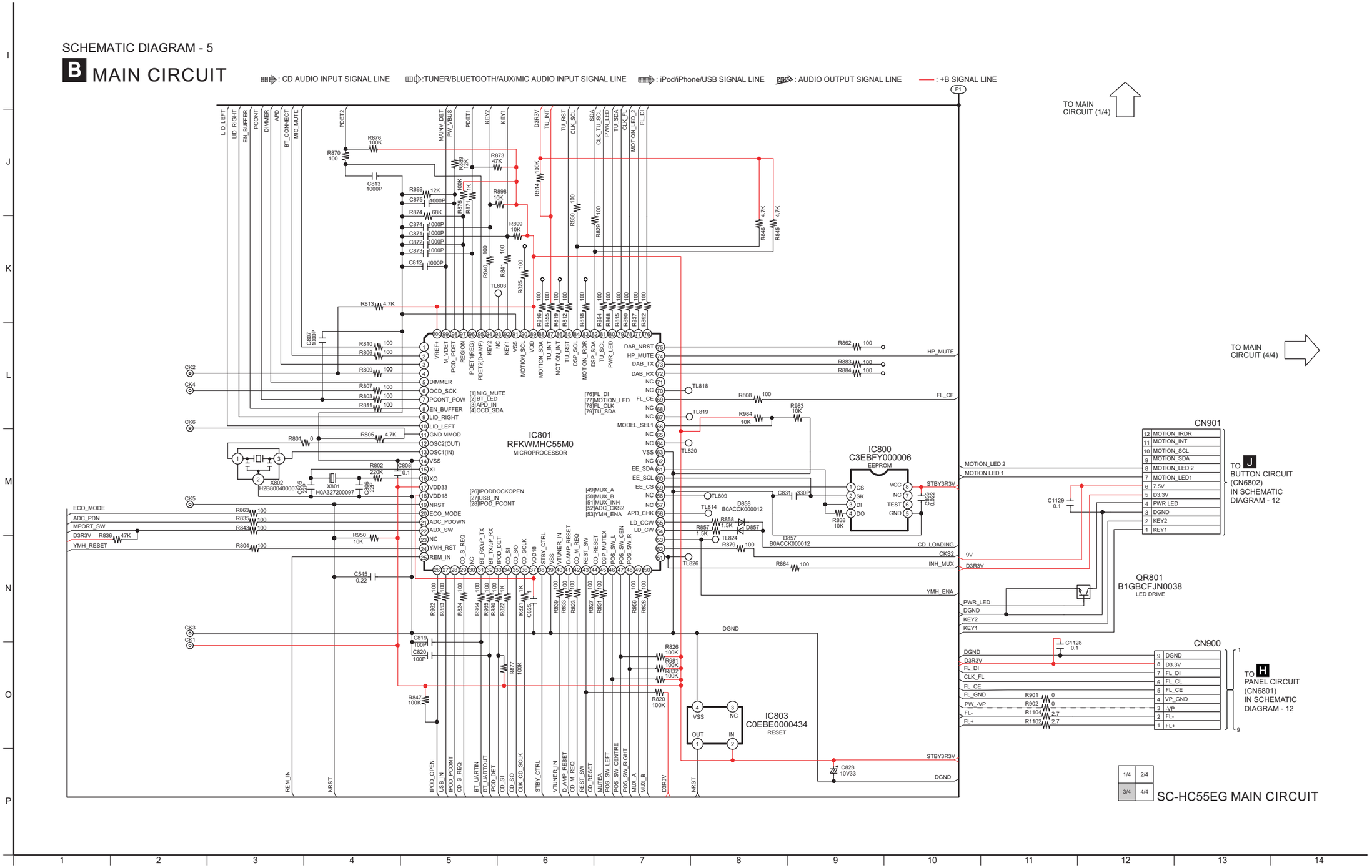

15.7. MAIN CIRCUIT (4/4)

SCHEMATIC DIAGRAM - 6

B MAIN CIRCUIT

: CD AUDIO INPUT SIGNAL LINE :TUNER/BLUETOOTH/AUX/MIC AUDIO INPUT SIGNAL LINE : iPod/iPhone/USB SIGNAL LINE : AUDIO OUTPUT SIGNAL LINE : +B SIGNAL LINE : - B SIGNAL LINE

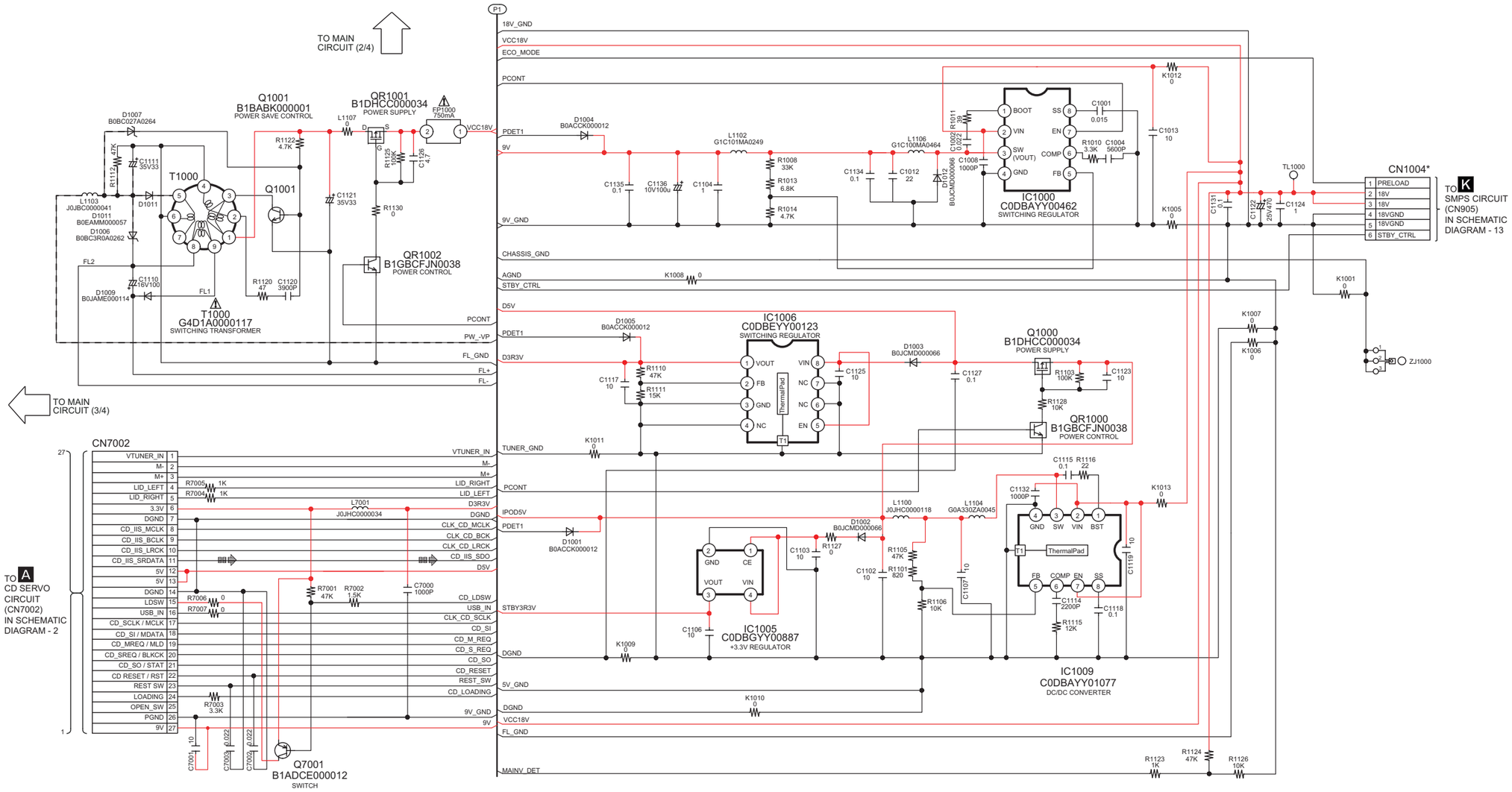

NOTE: " * " REF IS FOR INDICATION ONLY

1/4	2/4
3/4	4/4

SC-HC55EG MAIN CIRCUIT

15.8. MAIN (BLUETOOTH) CIRCUIT

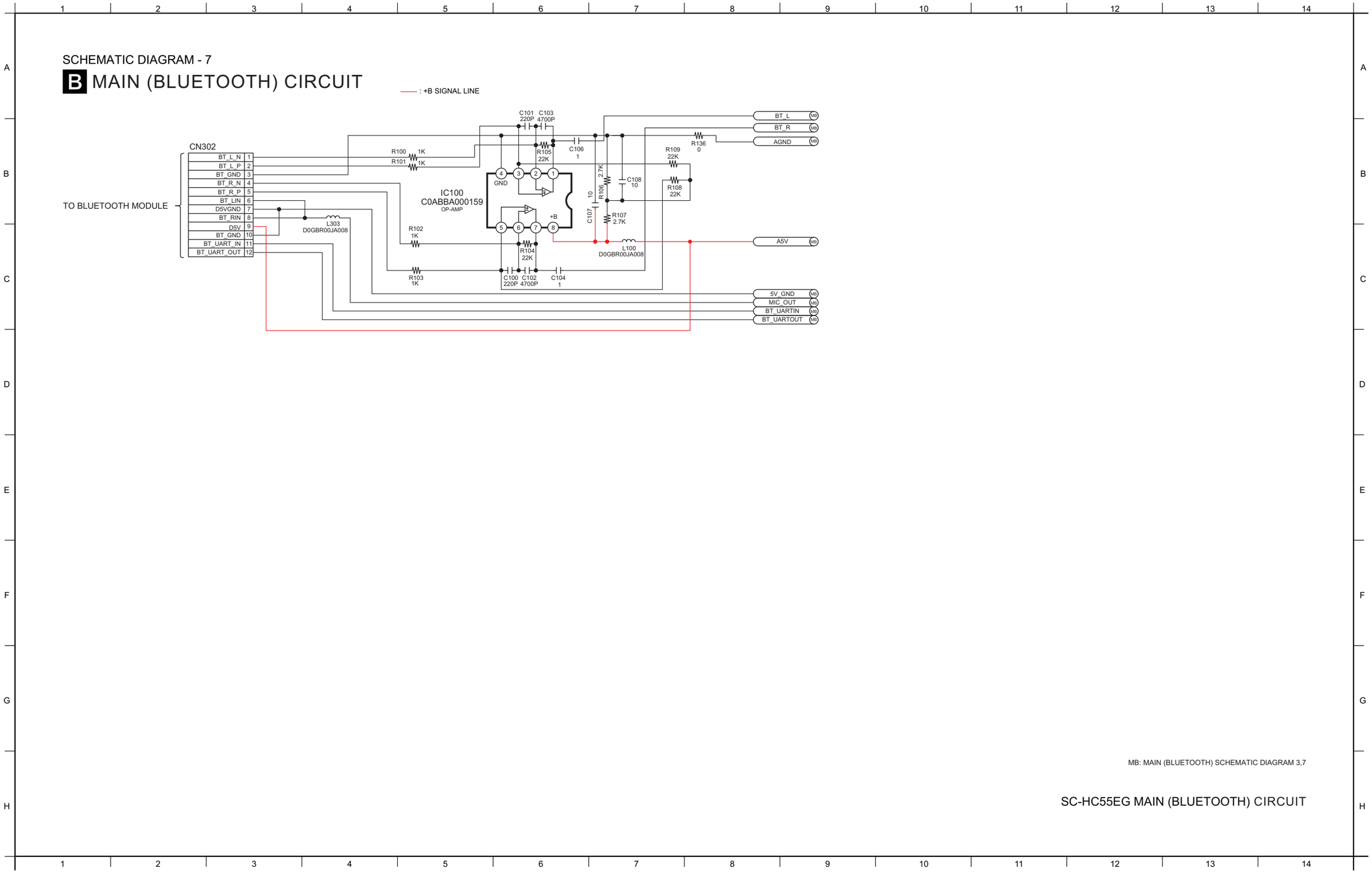

15.9. MAIN (SOUND) CIRCUIT

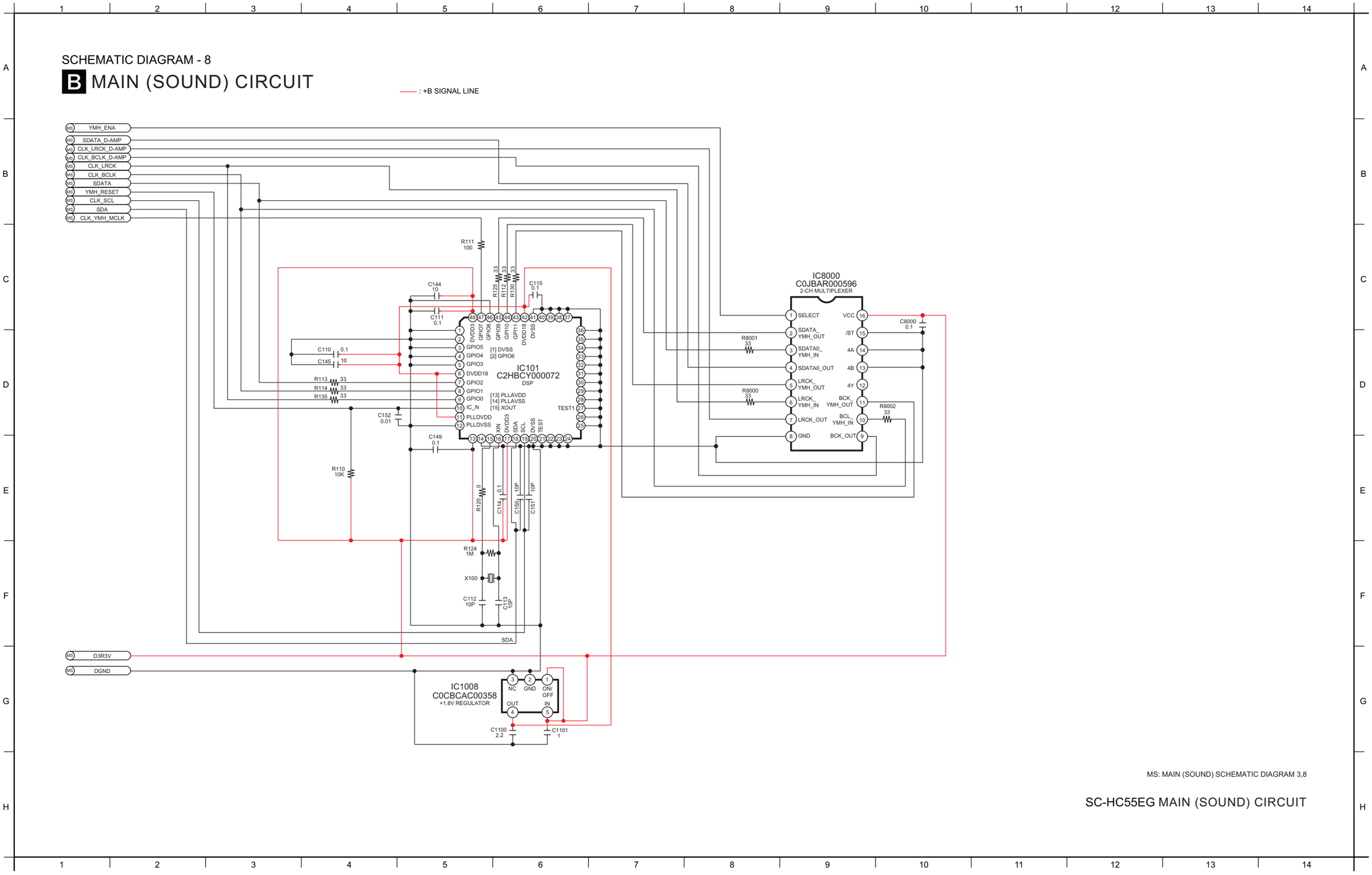

15.10. MAIN (USB/iPod) CIRCUIT

SCHEMATIC DIAGRAM - 9

B MAIN (USB/iPod) CIRCUIT

: iPod/iPhone/USB SIGNAL LINE : +B SIGNAL LINE

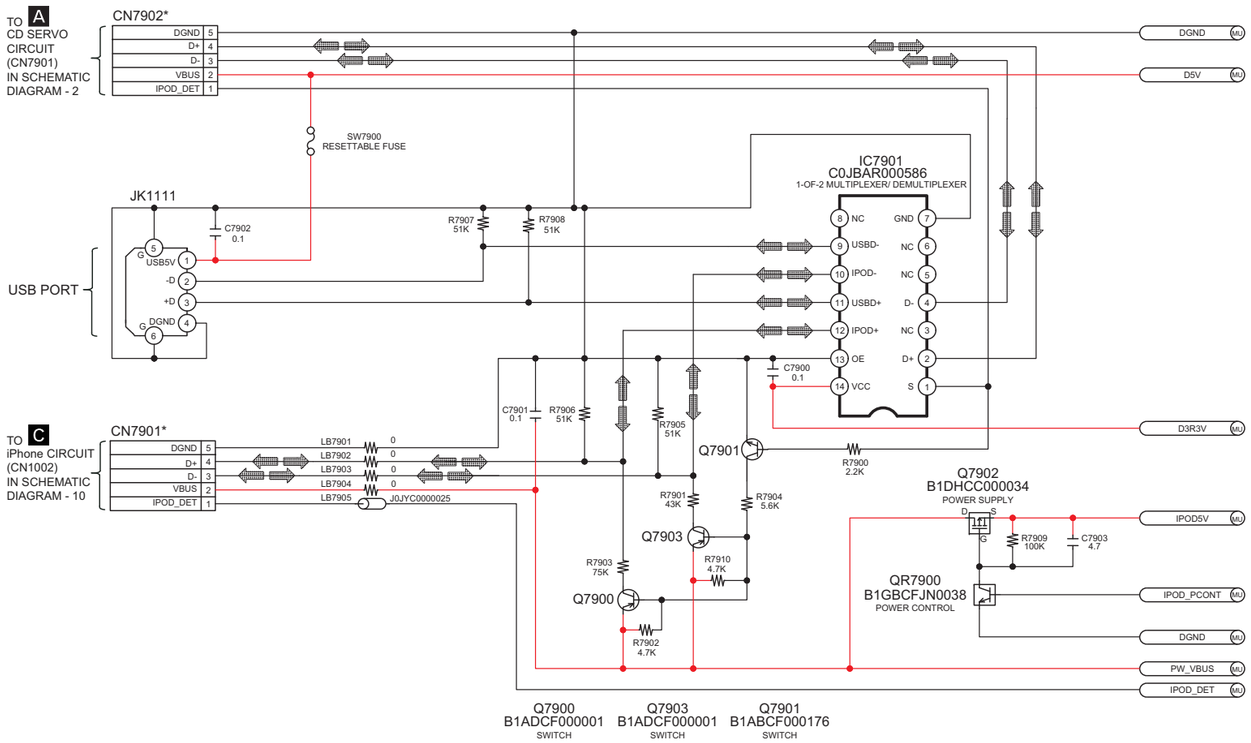

MU: MAIN (USB/iPod) SCHEMATIC DIAGRAM 3,9

NOTE: " * " REF IS FOR INDICATION ONLY

SC-HC55EG MAIN (USB/iPod) CIRCUIT

15.11. iPhone, TUNER & MOTOR CIRCUIT

SCHEMATIC DIAGRAM - 10

C iPhone CIRCUIT

: iPod/iPhone/USB SIGNAL LINE : +B SIGNAL LINE

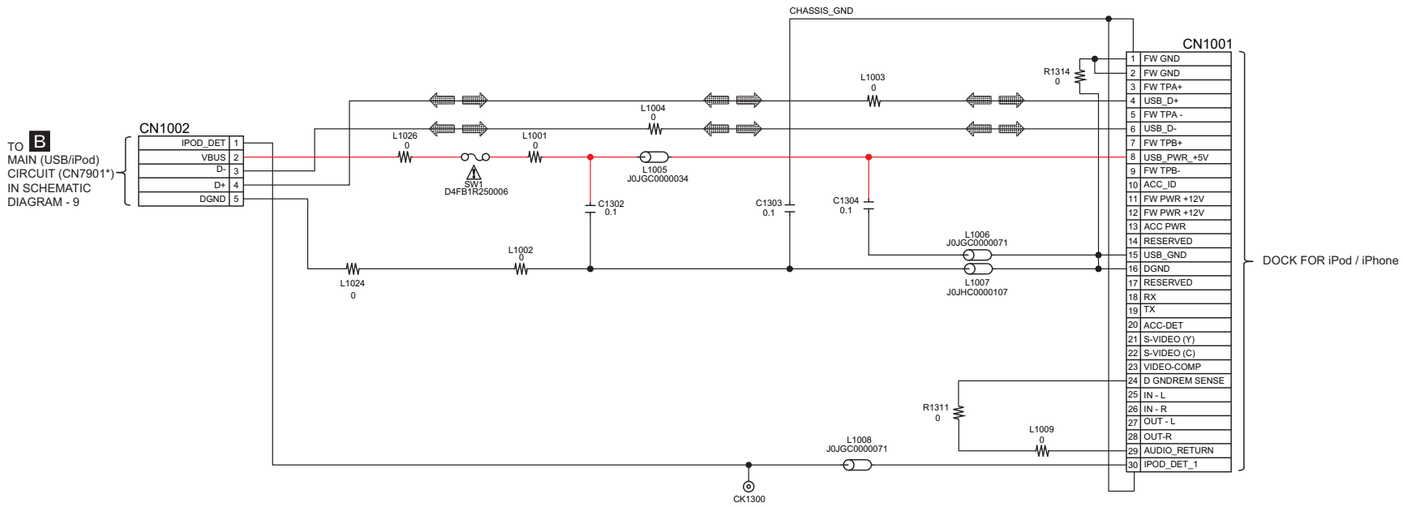

F MOTOR CIRCUIT

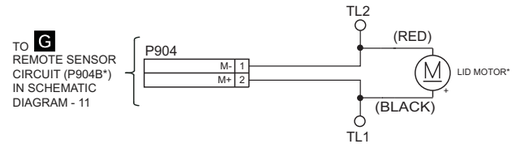

D TUNER CIRCUIT

:TUNER AUDIO INPUT SIGNAL LINE : FM SIGNAL LINE : AM SIGNAL LINE : +B SIGNAL LINE

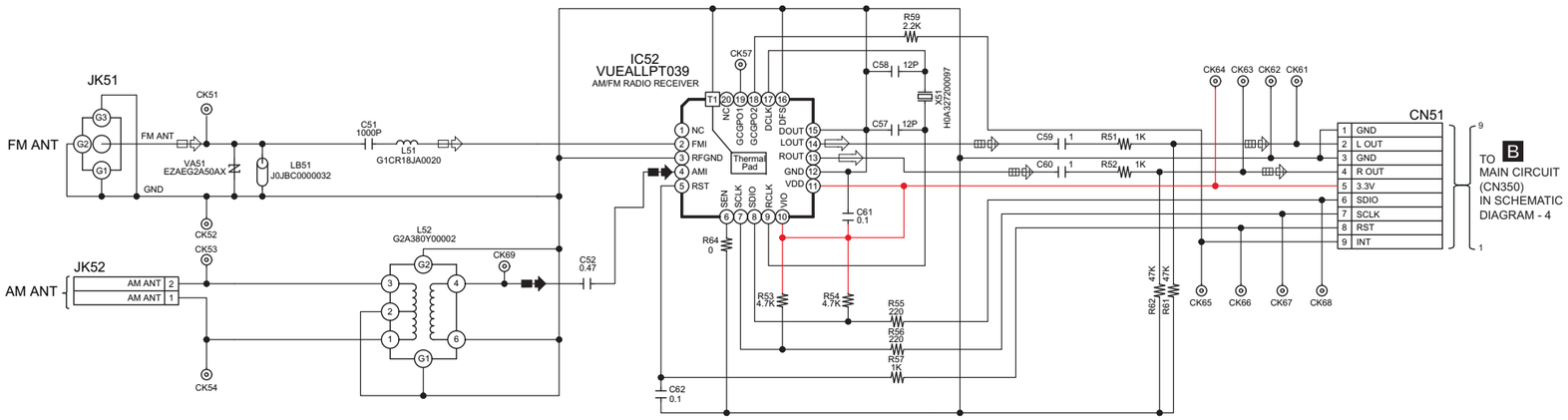

SC-HC55EG iPhone / TUNER / MOTOR CIRCUIT

15.12. REMOTE SENSOR & iPod OPEN SWITCH CIRCUIT

SCHEMATIC DIAGRAM - 11

G REMOTE SENSOR CIRCUIT

:TUNER/BLUETOOTH/AUX/MIC AUDIO INPUT SIGNAL LINE

: +B SIGNAL LINE

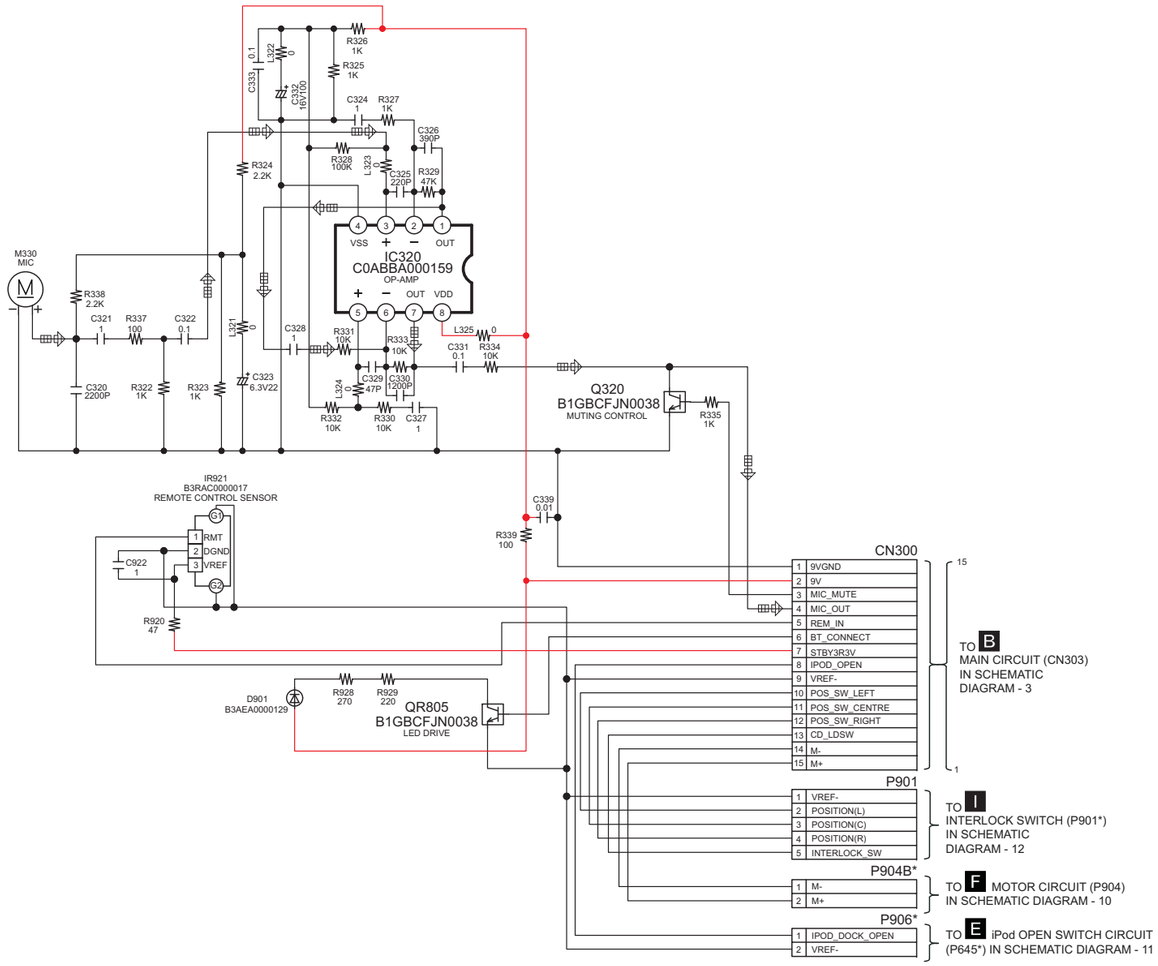

E iPod OPEN SWITCH CIRCUIT

NOTE: " * " REF IS FOR INDICATION ONLY

SC-HC55EG REMOTE SENSOR / iPod OPEN SWITCH CIRCUIT

15.13. PANEL, INTERLOCK SWITCH & BUTTON CIRCUIT

SCHEMATIC DIAGRAM - 12

H PANEL CIRCUIT

: +B SIGNAL LINE : -B SIGNAL LINE

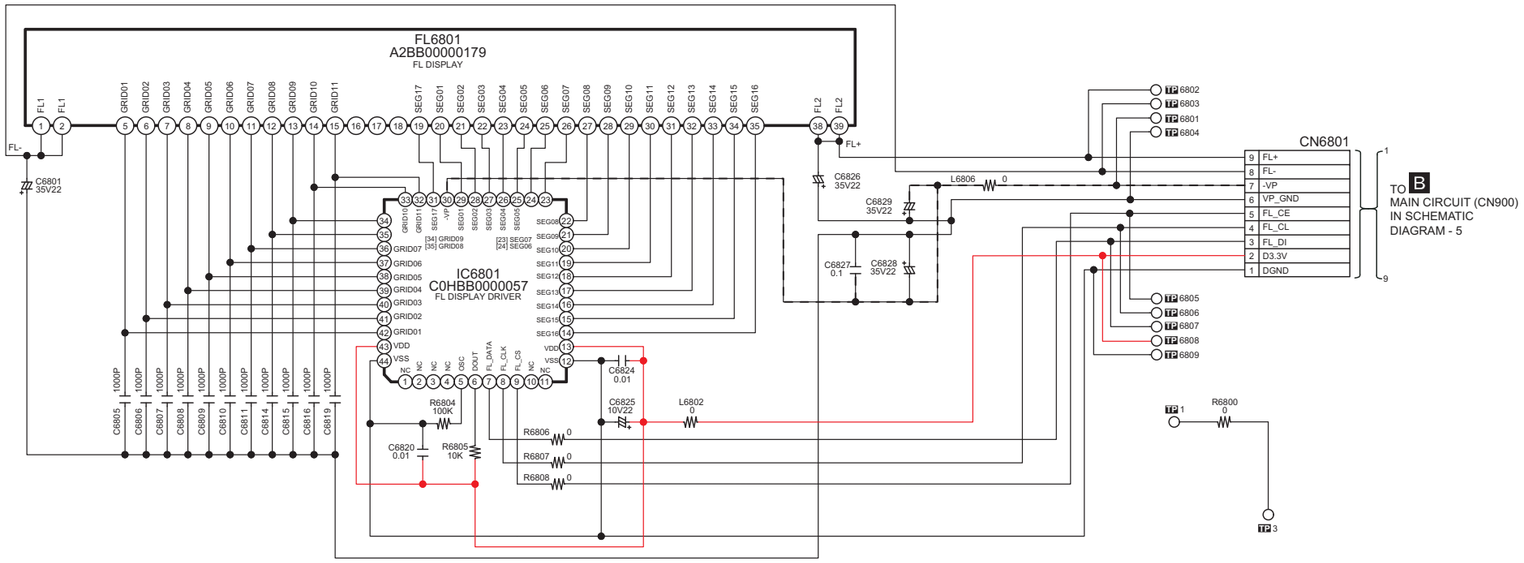

J BUTTON CIRCUIT

: +B SIGNAL LINE

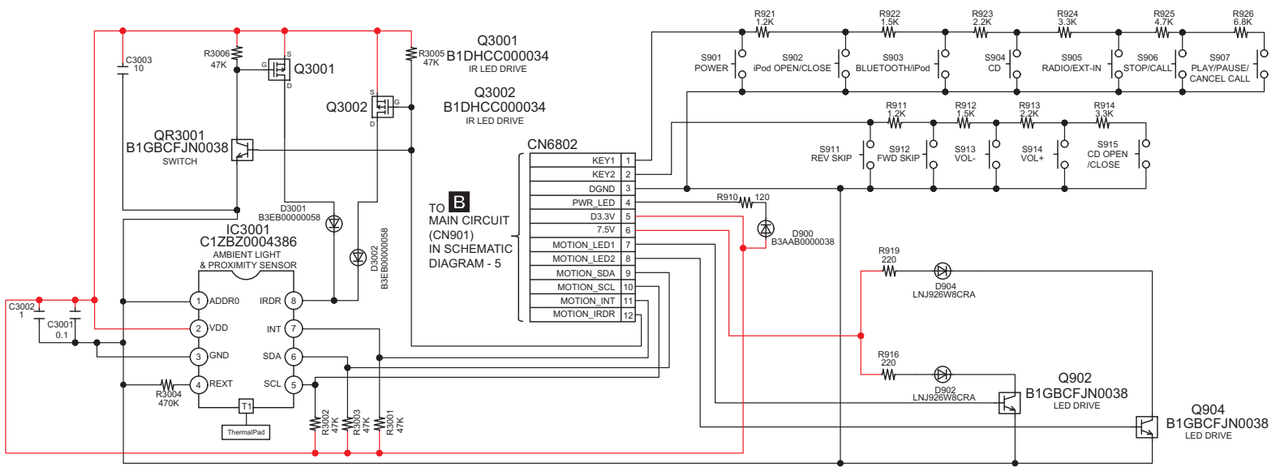

I INTERLOCK SWITCH CIRCUIT

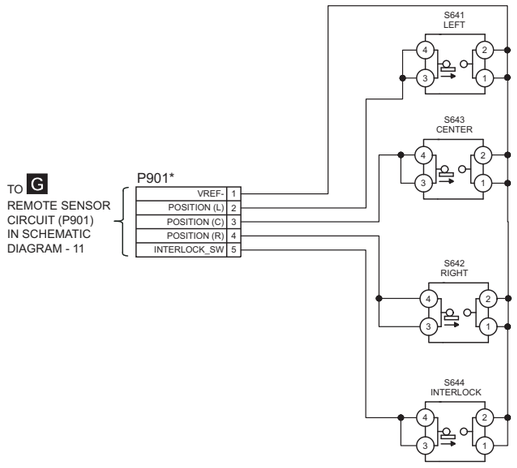

NOTE: " * " REF IS FOR INDICATION ONLY

SC-HC55EG BUTTON / PANEL / INTERLOCK SWITCH CIRCUIT

15.14. SMPS CIRCUIT

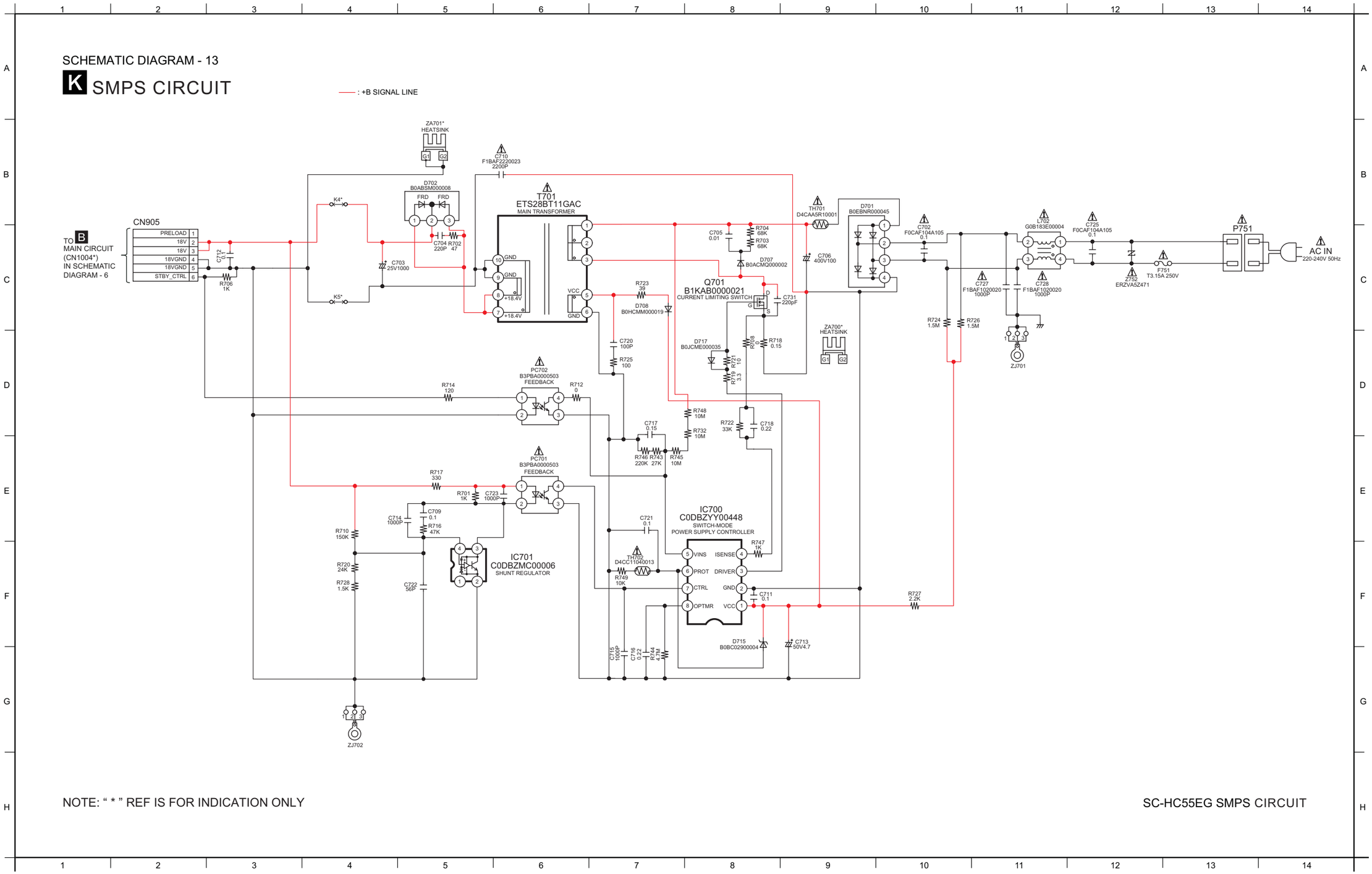

NOTE: " * " REF IS FOR INDICATION ONLY

SC-HC55EG SMPS CIRCUIT

16 Printed Circuit Board

16.1. CD SERVO P.C.B.

A CD SERVO P.C.B. (REPX0918A)

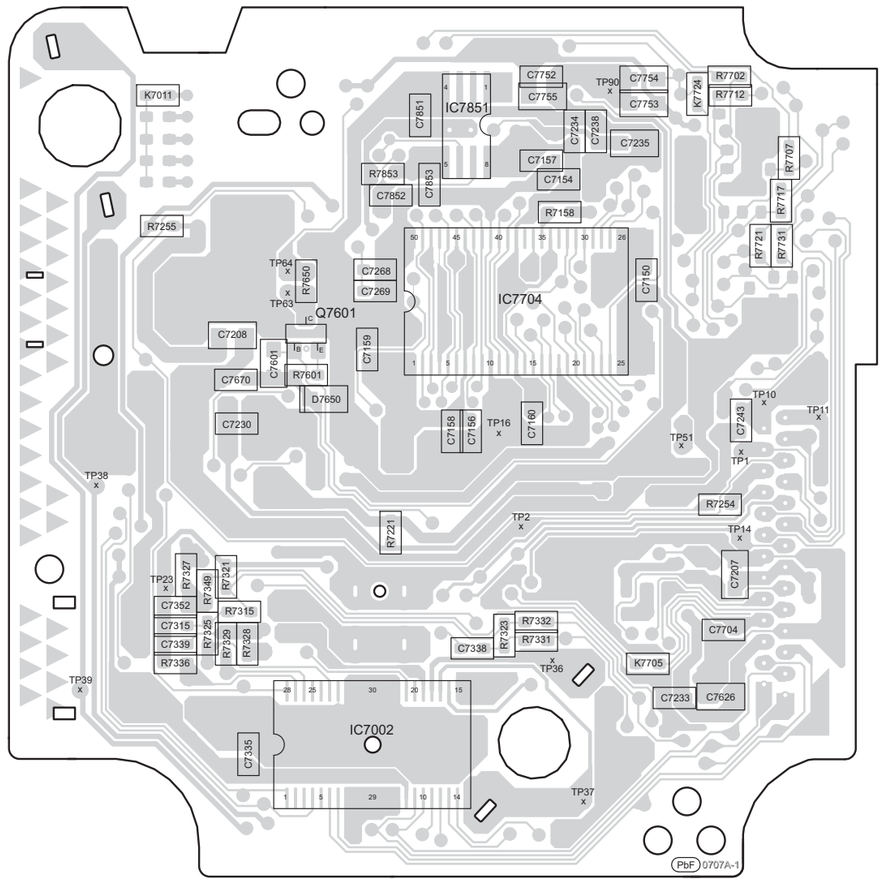

(SIDE A)

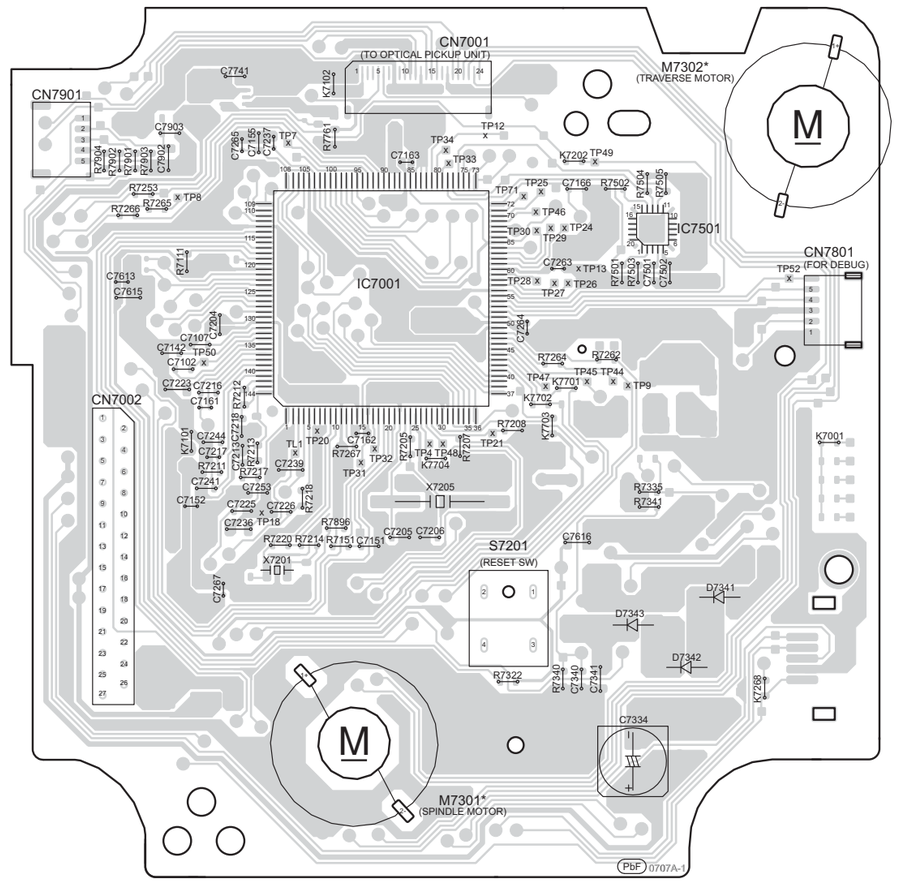

(SIDE B)

NOTE: " * " REF IS FOR INDICATION ONLY

SC-HC55EG
CD SERVO P.C.B.

16.2. MAIN P.C.B. (Side A)

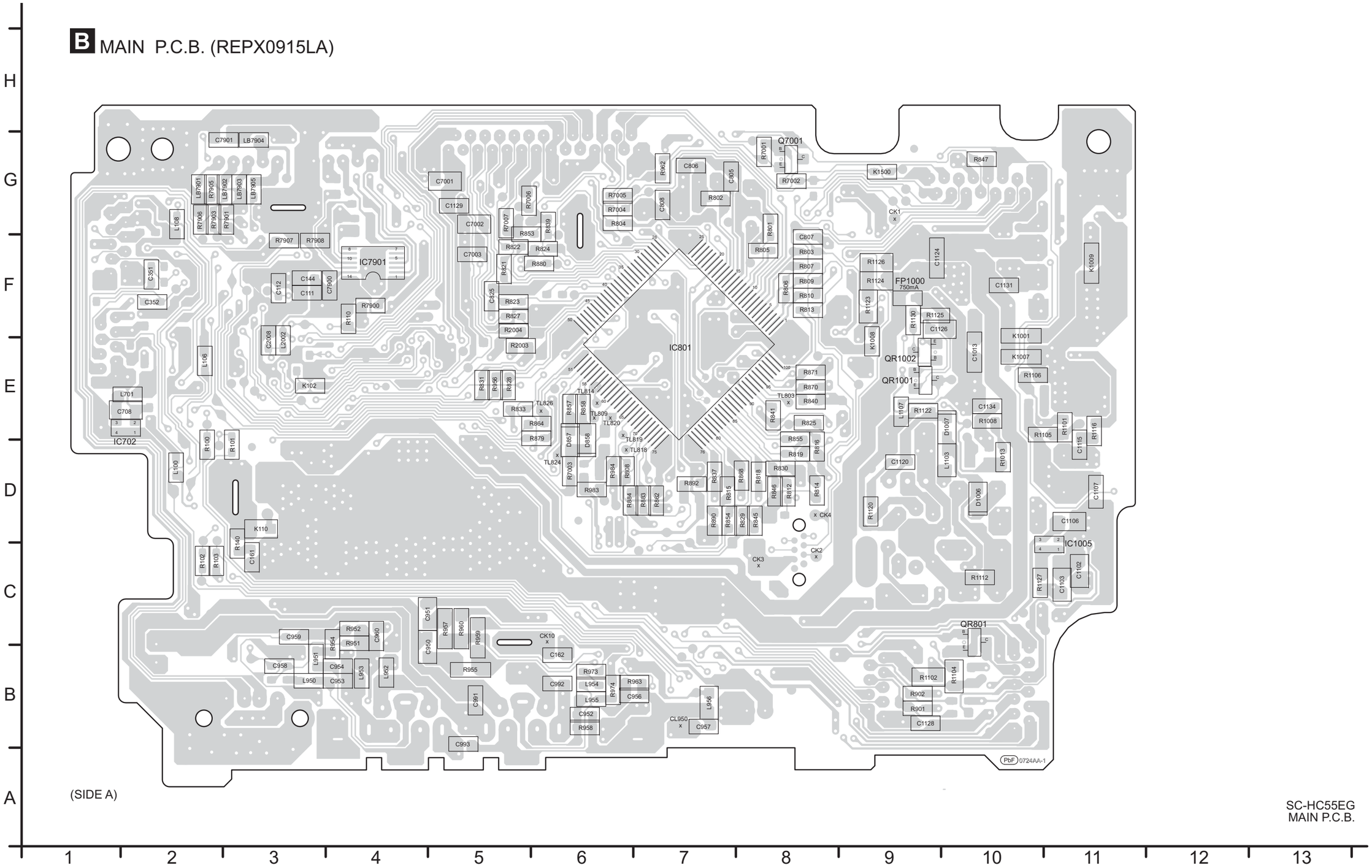

16.3. MAIN P.C.B. (Side B)

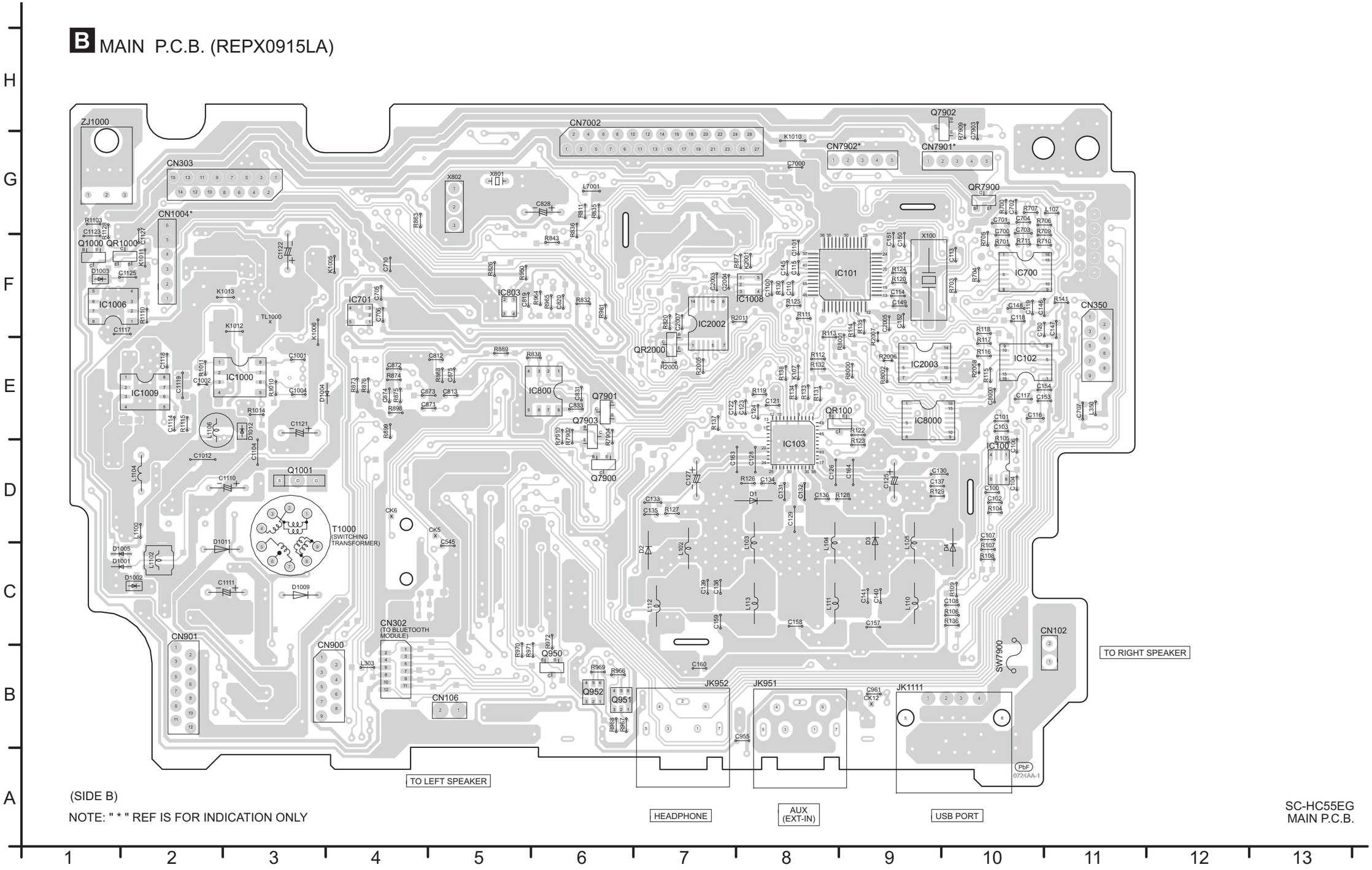

16.4. iPhone, TUNER, iPod OPEN SWITCH, MOTOR & REMOTE SENSOR P.C.B.

C iPhone P.C.B. (REPX0915LB)

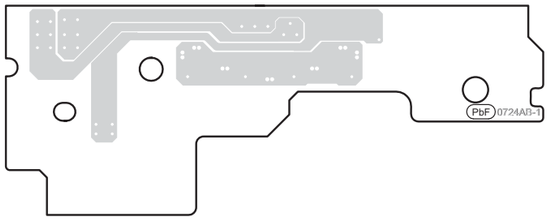

(SIDE A)

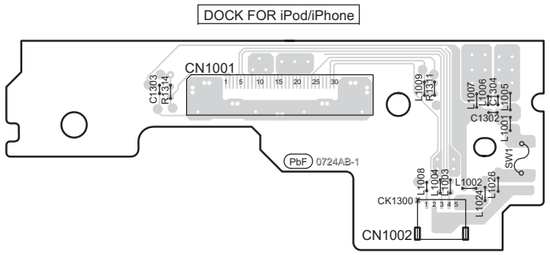

(SIDE B)

E iPod OPEN SWITCH P.C.B. (REPX0915LC)

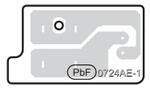

(SIDE A)

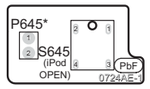

(SIDE B)

F MOTOR P.C.B. (REPX0915LF)

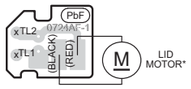

(SIDE A)

(SIDE B)

D TUNER P.C.B. (REPX0915LD)

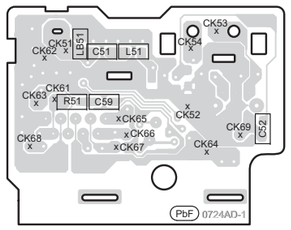

(SIDE A)

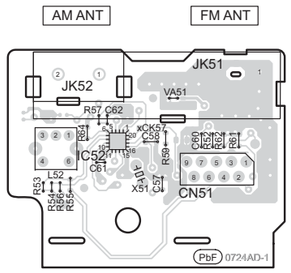

(SIDE B)

G REMOTE SENSOR P.C.B. (REPX0915LC)

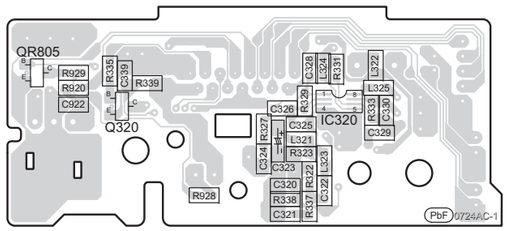

(SIDE A)

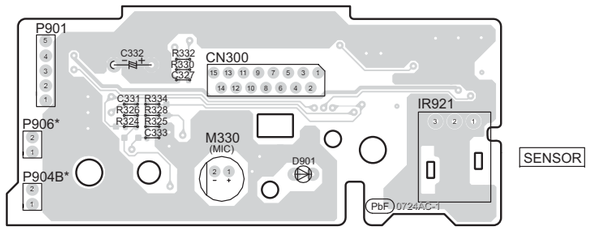

(SIDE B)

NOTE: " * " REF IS FOR INDICATION ONLY

SC-HC55EG
iPhone / TUNER / iPod OPEN SWITCH / MOTOR / REMOTE SENSOR P.C.B.

16.5. PANEL, INTERLOCK SWITCH & BUTTON P.C.B.

H PANEL P.C.B. (REPX0914AA)

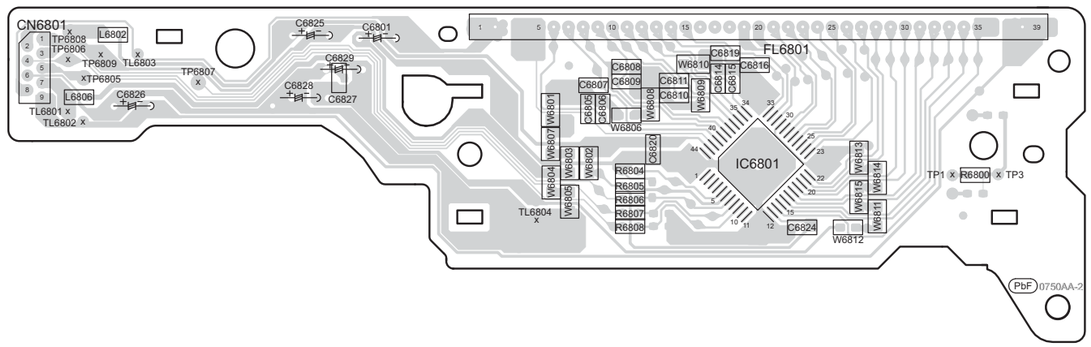

I INTERLOCK SWITCH P.C.B. (REPX0914AC)

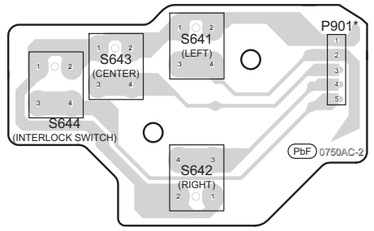

J BUTTON P.C.B. (REPX0916B)

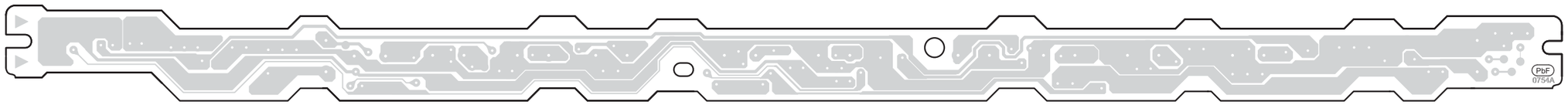

(SIDE A)

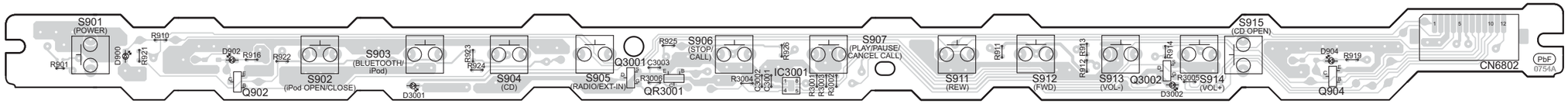

(SIDE B)

NOTE: " * " REF IS FOR INDICATION ONLY

SC-HC55EG
PANEL / INTERLOCK SWITCH/ BUTTON P.C.B.

16.6. SMPS P.C.B.

K SMPS P.C.B. (REPX0917A)

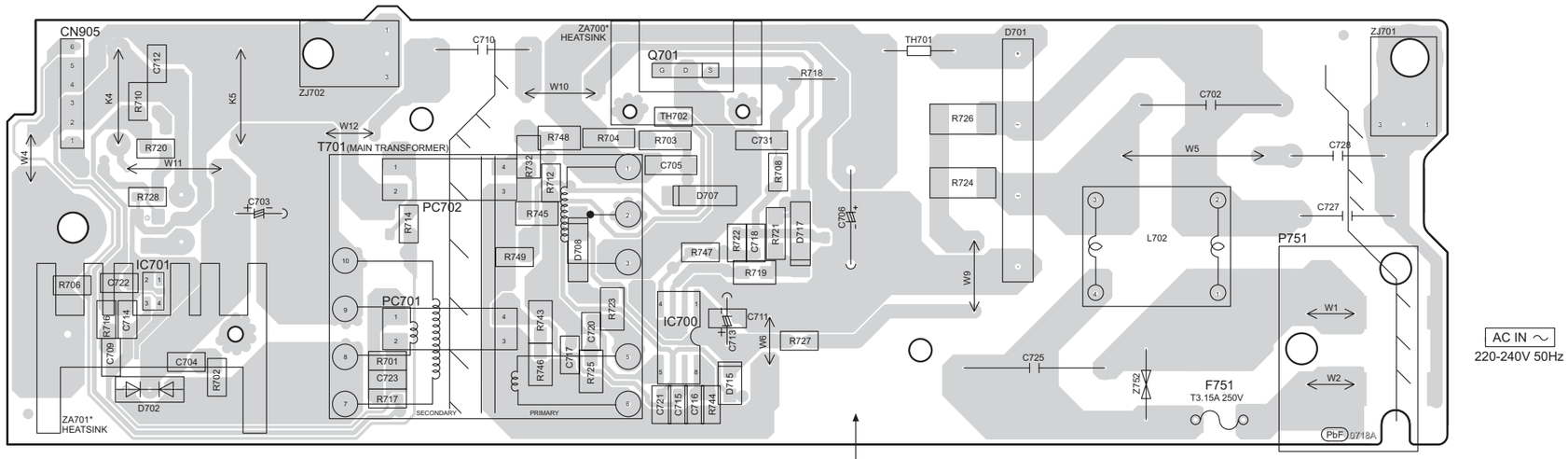

NOTE: " * " REF IS FOR INDICATION ONLY

SC-HC55EG
SMPS P.C.B.

17 Terminal Function of IC's

17.1. IC801 (RFKWMHC55M0) MICRO PROCESSOR IC

Pin No.	Mark	I/O	Function
1	MIC_MUTE	O	Mic Muting
2	BT_LED	O	BlueTooth LED Drive
3	APD_IN	I	Auto Power Down Detect
4	OCD_SDA	O	OCD Serial Data
5	DIMMER	O	FL Display Brightness Control
6	OCD_SCK	O	OCD Serial Clock
7	PCONT_POW	O	Regulator On/Off Control
8	EN_BUFFER	O	EN Buffer (Oscillating Signal Switching)
9	LID_RIGHT	O	Sliding Door Open/Close Control Right
10	LID_LEFT	O	Sliding Door Open/Close Control Left
11	MMOD	-	Ground
12	OSC2 (OUT)	O	Oscillator Output
13	OSC1 (IN)	I	Oscillator Input
14	VSS	-	Ground
15	XI	I	Oscillator Input
16	XO	O	Oscillator Output
17	VDD33	-	+3.3V Voltage Supply
18	VDD18	-	+1.8V Voltage Supply
19	NRST	I	Active Low Reset
20	ECO_MODE	O	Eco Mode
21	ADC_PDOWN	O	ADC Power Down Detect
22	AUX_SW	I	Music Port Detect Switch
23	NC	-	No connection
24	DSP_RST	O	DSP Reset
25	REM_IN	I	Remote control Input
26	IPOD_DOCK_OPEN	I	iPod Docking Detection (For sliding/charging)
27	USB_IN	I	USB Detection
28	IPOD_PCONT	O	iPod Power Control (Active = High)
29	CD_S_REQ	I	CD Status Request
30	NC	-	No connection
31	BT_RX	O	Bluetooth Rx
32	BT_TX	I	Bluetooth Tx
33	IPOD_DET	I	iPod Detect Switch (Active Low: F76)
34	CD_SI	O	CD Serial Input
35	CD_SO	O	CD Serial Output
36	CD_SCLK	O	CD Serial Clock
37	VDD18	-	+1.8V Voltage Supply
38	STBY_CTRL	O	Standby Control
39	VSS	-	Ground
40	I2S_OFF	O	I2S On/Off (For vTuner)
41	D-AMP_RST	O	D-AMP Reset
42	CD_M_REQ	O	CD LSI Request
43	REST_SW	I	Reset Switch Detect
44	CD_RESET	O	CD Reset
45	DSP_MUTE_X	O	DSP Muting
46	POS_SW_L	I	Sliding Door Position Detection (L)
47	POS_SW_CEN	I	Sliding Door Position Detection (Center)
48	POS_SW_R	I	Sliding Door Position Detection ®
49	MUX_A_PORT	O	Multiplexer Muting Switch Port A
50	MUX_B_PORT	O	Multiplexer Muting Switch Port B
51	MUX_INH	O	Multiplexer Muting Control (Active=High)
52	ADC_CKS2	O	ADC Clock Switching
53	YMH_ENA	O	DSP Enhancement
54	LD_CW	O	Loading Motor clockwise
55	LD_CCW	O	Loading Motor counter clockwise
56	APD_CHK	O	Auto Power Down Check
57	NC	-	No connection
58	NC	-	No connection
59	EE_CS	O	EEPROM Chip Select
60	EE_SCL	O	EEPROM Serial Clock
61	EE_SDA	I/O	EEPROM Serial Data
62	NC	-	No connection
63	VSS	-	Ground
64	NC	-	No connection
65	NC	-	No connection
66	MODEL_SEL1	-	Model setting selection
67	NC	-	No connection
68	NC	-	No connection
69	FL_CE	O	FL Chip Enable
70	NC	-	No connection
71	NC	-	No connection
72	DAB_RX	-	DAB Receive (For DAB)
73	DAB_TX	-	DAB Transmit (For DAB)
74	HP_MUTE	O	Headphone Mute
75	DAB_NRST	-	DAB Reset (For DAB)
76	FL_DI	I	FL Serial Data Input
77	MOTION_LED_R	O	Motion Detect LED Drive
78	FL_CLK	O	FL Serial Clock
79	TU_SDA	I/O	Tuner Serial Data (For Tuner)
80	PWR_LED_CTRL	O	Power LED Drive
81	TU_SCL	O	Tuner Serial Clock (For Tuner)
82	DSP_SDA	I/O	DSP Serial Data
83	MOTION_RIDR	O	Motion Detect
84	DSP_SCL	O	DSP Serial Clock
85	TU_RST	O	Tuner Reset (For Tuner)
86	MOTION_INT	I	Motion Interrupt Request
87	TUN_INT	I	Tuner Interrupt Request
88	MOTION_SDA	O	Motion Serial Data
89	VDD	-	Voltage Supply
90	MOTION_SCL	O	Motion Serial Clock
91	VSS	-	Ground
92	KEY1	I	Key Input 1
93	NC	-	No connection
94	KEY2	I	Key Input 2
95	PDET2	I	D-AMP IC Error Detect (F61)
96	PDET1	I	Regulator Power Rise Detect (F76)
97	REGION	-	Tuner Region Setting
98	IPOD_IPDET	I	iPod IP Detect (Authentication)
99	M_VDET	I	SMSP Power Detect / Power Drop Detection (F76)
100	VREF+	-	Voltage Supply

18 Exploded View and Replacement Parts List

18.1. Exploded View and Mechanical replacement Parts List

18.1.1. Cabinet Parts Location

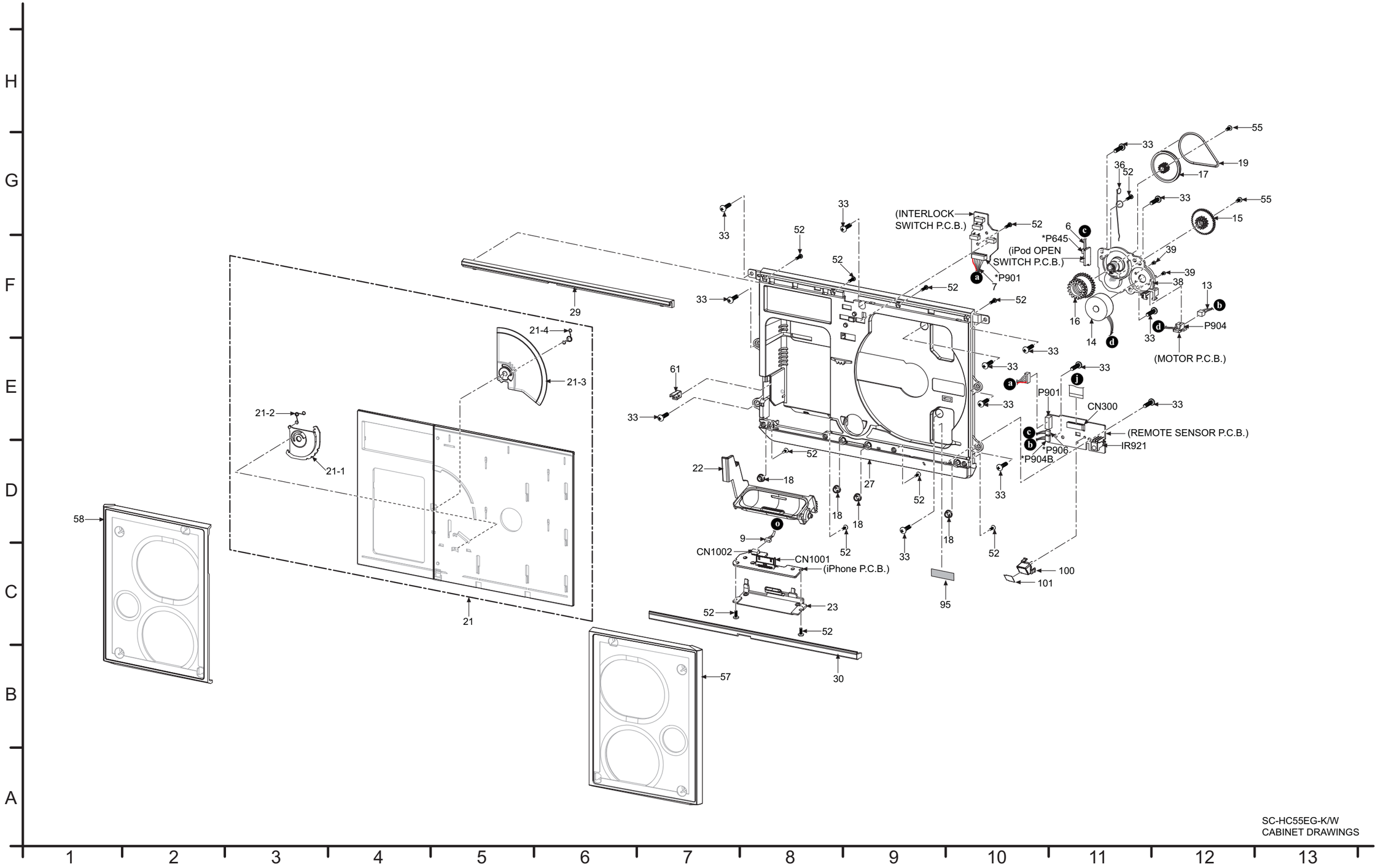

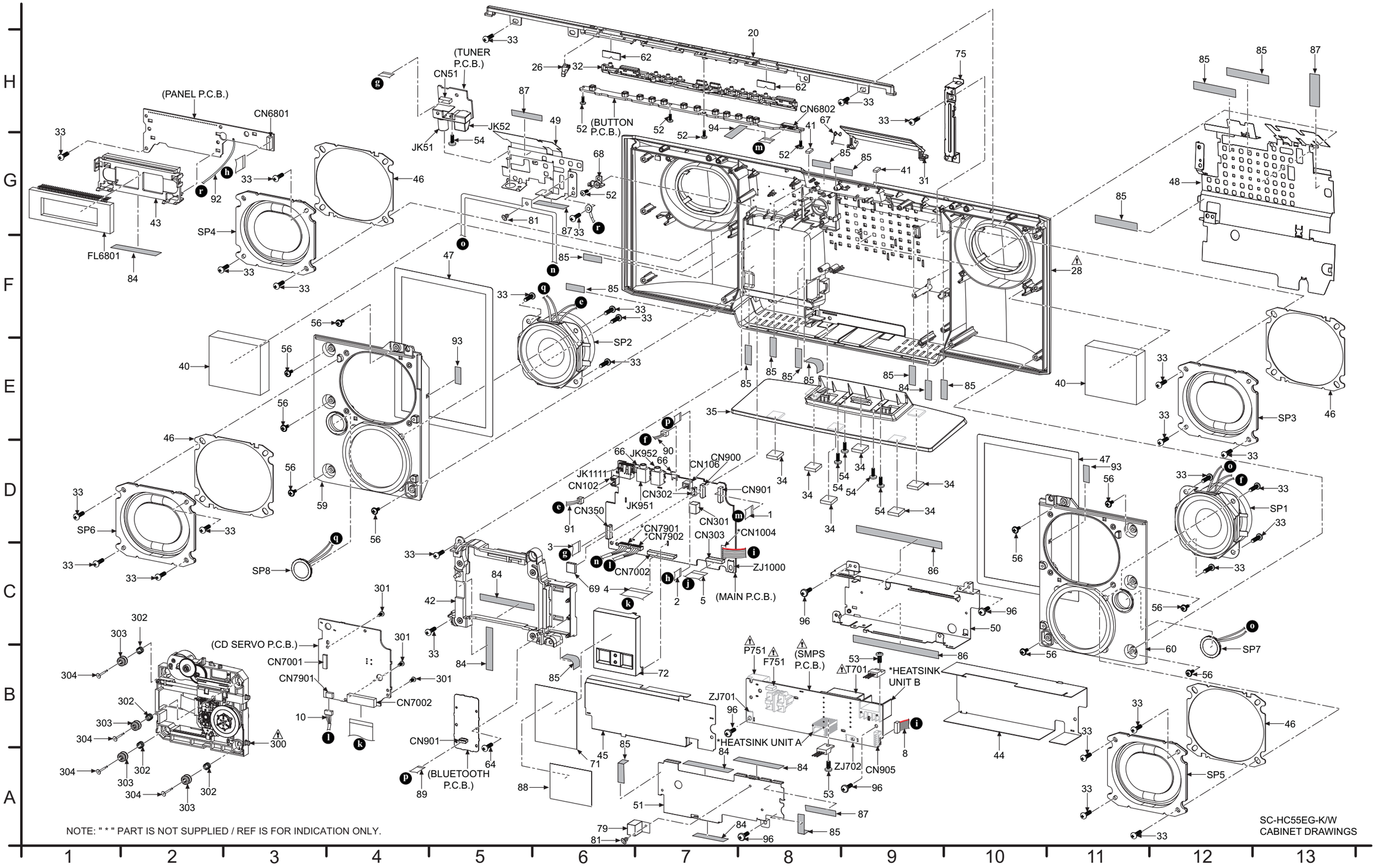
(PANEL P.C.B.)
CN6801
FL6801
(TUNER P.C.B.)
CN51
JK51
JK52
(BUTTON P.C.B.)
CN6802
SP4
SP2
SP3
SP1
SP6
SP8
SP7
SP5
(CD SERVO P.C.B.)
CN7001
CN7901
CN7002
(BLUETOOTH P.C.B.)
CN901
JK952
JK1111
CN102
CN106
CN900
CN302
CN901
JK951
CN350
CN301
CN303
*CN7901
*CN7902
*CN1004
ZJ1000
(MAIN P.C.B.)
P751
F751
(SMPS P.C.B.)
T701
*HEATSINK UNIT B
ZJ701
*HEATSINK UNIT A
ZJ702
CN905
NOTE: " * " PART IS NOT SUPPLIED / REF IS FOR INDICATION ONLY.
SC-HC55EG-K/W
CABINET DRAWINGS

18.1.2. Packaging

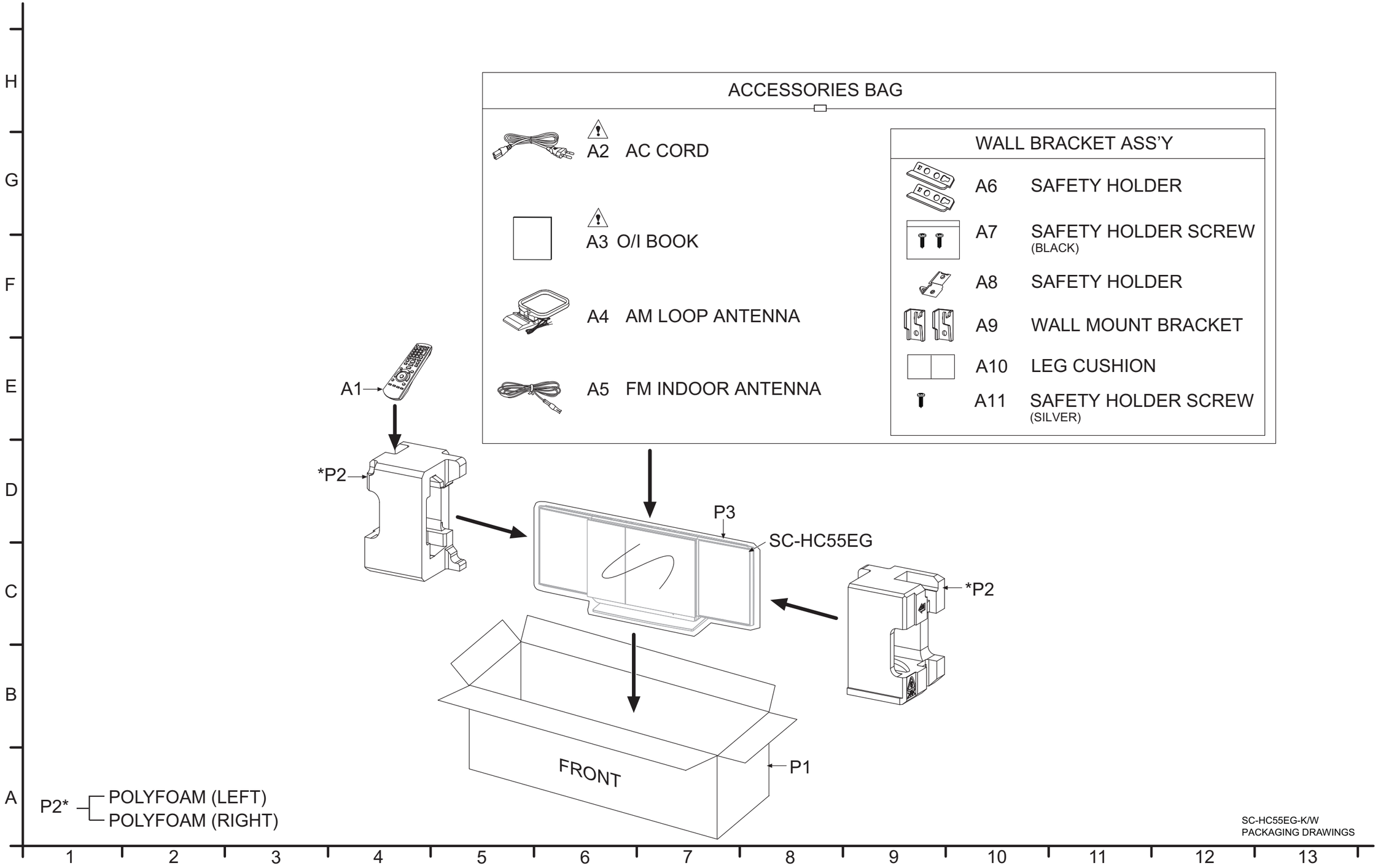

18.1.3. Mechanical Replacement Parts List

Important Safety Notice

Components identified by ⚠ mark have special characteristics important for safety.
When replacing any of these components, use only manufacturer's specified parts.

RTL (Retention Time Limited)

Note: The marking (RTL) indicates that the Retention Time is Limited for this item.
After the discontinuation of this assembly in production, the item will continue to be available for a specific period of time. The retention period of availability is dependant on the type of assembly, and in accordance with the laws governing part and product retention.
After the end of this period, the assembly will no longer be available.

Note:

- When replacing any of these components, be sure to use only manufacturer's specified parts shown in the replacement part list.
- The parenthesized indications on the Remarks column specify the destination & product color (Refer to the cover page for the information).
- Parts without these indications shall be used for all areas.
- This product uses a laser diode. Refer to "Precaution of Laser Diode".
- All parts mentioned are supplied by PAVCSG unless indicated likewise.
- Parts mentioned [SPG] in the Remarks column are supplied by PAVC-CSG.
- Reference for O/I book languages are as follows:

Ar:	Arabic	Du:	Dutch	It:	Italian	Sp:	Spanish
Cf:	Canadian French	En:	English	Ko:	Korean	Sw:	Swedish
Cz:	Czech	Fr:	French	Po:	Polish	Co:	Traditional Chinese
Da:	Danish	Ge:	German	Ru:	Russian	Cn:	Simplified Chinese
Pe:	Persian	Ur:	Ukraine	Pr:	Portuguese		

Safety	Ref. No.	Part No.	Part Name & Description	Qty	Remarks
			CABINET AND CHASSIS		
	1	REEX1209-1	12P FFC (BUTTON-MAIN)	1	
	2	REEX1210-1	9P FFC (PANEL-MAIN)	1	
	3	REEX1211-1	9P FFC (TUNER-MAIN)	1	
	4	REEX1213-1	27P FFC (CD SERVO-MAIN)	1	
	5	REEX1215-1	15P FFC (REMOTE SENSOR-MAIN)	1	
	6	REXX1164	2P CABLE WIRE (iPod OPEN SW-REMOTE SENSOR)	1	
	7	REXX1165	6P CABLE WIRE (SW LEVER-MAIN)	1	
	8	REXX1166	6P CABLE WIRE (SMPS-MAIN)	1	
	9	RXQ1993	5P CABLE WIRE ASS'Y (iPhone-MAIN)	1	
	10	REXX1168	5P CABLE WIRE (CD SERVO-MAIN)	1	
	13	REXX1210	2P CABLE WIRE (REMOTE SENSOR-MOTOR)	1	
	14	RFKPHC35-K	MOTOR ASS'Y	1	
	15	RDGX1014	MIDDLE GEAR	1	
	16	RDGX1015	DRIVE GEAR	1	
	17	RDGX1016	PULLEY GEAR	1	
	18	RDPV0001	LID ROLLER	4	
	19	VMG1720	MOTOR BELT	1	
	20	RGKX1051F-1S	TOP ORNAMENT	1	
	21	RYPX1107J-K	DOOR UNIT	1	K
	21	RYPX1107J-W	DOOR UNIT	1	W
	21-1	RDKX0001A-2	CAM GEAR	1	
	21-2	RMCX1002	CRADLE LID SPRING	1	
	21-3	RKF0925-K	LENS COVER	1	
	21-4	RMB0927	LENS COVER SPRING	1	
	22	RGKX1058-K2	DOCKING TUB	1	
	23	RGKX1059-K	DOCKING COVER	1	
	26	RGLX1011-Q1	POWER LIGHT PIECE	1	
	27	RFKGHC35EF-K	FRONT CABINET ASS'Y	1	
⚠	28	RGPX1050J-K1	REAR PANEL	1	
	29	RGPX1054-K	GUIDE REEL TOP	1	
	30	RGPX1055-K	GUIDE REEL BOTTOM	1	
	31	RGQX1009-K	JACK LID	1	
	32	RGUX1031C1S1	TOP BUTTON	1	
	33	RHD26046	SCREW	43	
	34	RKAX0028-K	LEG CUSHION	6	
	35	RKQX1016A-S	BASE STAND	1	
	36	RMBX1017	iPod DOCKING SPRING	1	
	38	RMKX1026	GEAR BASE	1	
	39	XQN17+C28FJ	SCREW	2	
	40	RMFX1024	ACOUSTIC ABSORBER	2	
	41	RMGX0033	CUSHION	2	
	42	RMKX1028-1	MECHA CHASSIS	1	
	43	RMNX1051-K	FL HOLDER	1	

Safety	Ref. No.	Part No.	Part Name & Description	Qty	Remarks
	44	RMNX1052-1	SMPS INSULATOR A	1	
	45	RMNX1053-1	SMPS INSULATOR B	1	
	46	RMQ1920	EVA PACKING PASSIVE FRONT	4	
	47	RMQ1936-1	EPT SEALER BAR-RIER	2	
	48	RXQ1995-1	BACK SHIELD A UNIT	1	
	49	RXQ1996-1	BACK SHIELD B UNIT	1	
	50	RSCX1048-1	SMPS BRACKET	1	
	51	RSCX1049	SMPS SHIELD PLATE	1	
	52	VHD1224-1	SCREW	17	
	53	XTB3+8JFJ	SCREW	2	
	54	XTB3+8JFJK	SCREW	5	
	55	XTW2+6SFJ	SCREW	2	
	56	XTW3+12TFJK	SCREW	10	
	57	RYBX1013A-K	NET FRAME UNIT R	1	
	58	RYBX1012A-K	NET FRAME UNIT L	1	
	59	RYPX1104-K	SPEAKER CABINET UNIT L	1	
	60	RYPX1105-K	SPEAKER CABINET UNIT R	1	
	61	RHQX0003	MINI SIDE LOCK	1	
	62	RGLX1012-Q1	BUTTON LIGHTING PIECE	2	
	64	RHD14129	SCREW	1	
	66	RMC0667	EARTH SPRING	2	
	67	RMC0808	LID SPRING	1	
	68	RMK0790	SPRING HOLDER	1	
	69	RSC1019	D-AMP HEAT ABSORBER	1	
	71	RSC1032	DAMP COPPER SHIELD	1	
	72	RXA0250	D-AMP SHIELD	1	
	75	RMQX1084	INNER BRACKET	1	
	79	RMQ1946	SMPS GASKET	1	
	81	RMR2035-K	RIVET	2	
	84	RMFX1026	HIMELON	7	
	85	RMFX1027	HIMELON	16	
	86	RMFX1028	HIMELON	2	
	87	RMF0519	HIMELON	4	
	88	RMN0976	INSULATOR	1	
	89	REE1612	12P FFC (BLUE-TOOTH-MAIN)	1	
	90	REXX1170	2P WIRE (SPEAKER R-MAIN)	1	
	91	REXX1169	2P WIRE (SPEAKER L-MAIN)	1	
	92	REXX0774	1P GROUND WIRE (PANEL-BACK SHIELD B)	1	
	93	RMQ1956	EPT SEALER A	2	
	94	RMQ1957	EPT SEALER B	1	
	95	RMQ1958	EPT SEALER C	1	
	96	RHD26043-1	SCREW	5	
	100	RKQ0320-K	LED HOLDER	1	
	101	RGQ0631-K	BT WINDOW	1	
			TRAVERSE DECK		
⚠	300	RAEX1034Z-V	TRAVERSE	1	
	301	XTN2+6GFJ	SCREW	3	
	302	RME0109-1	FLOATING SPRING	4	
	303	RMG0730-G	FLOATING RUBBER	4	
	304	RMS0757-1	FIXED PIN	4	
			SPEAKERS		
	SP1	EAS65P144C	FRONT SPEAKER	1	
	SP2	EAS65P144C	FRONT SPEAKER	1	
	SP3	EAS8DY02A	PASSIVE RADIATOR	1	
	SP4	EAS8DY02A	PASSIVE RADIATOR	1	
	SP5	EAS8DY02A	PASSIVE RADIATOR	1	
	SP6	EAS8DY02A	PASSIVE RADIATOR	1	

Safety	Ref. No.	Part No.	Part Name & Description	Qty	Remarks
	SP7	MFT-15T-10A1	PIEZO UNIT L	1	
	SP8	MFT-15T-10A1	PIEZO UNIT R	1	
	M330	L0CBAB000124	MICROPHONE UNITS		
			PACKING MATERI-ALS		
	P1	RPG9544	PACKING CASE	1	W
	P1	RPGX3495	PACKING CASE	1	K
	P2	RPNX1089	POLYFOAM	1	
	P3	RPFX0262-1	MIRAMAT	1	
			ACCESSORIES		
	A1	N2QAYB000643	REMOTE CONTROL	1	
⚠	A2	K2CQ2CA00007	AC CORD	1	
⚠	A3	RQTX1263-D	O/I BOOK (Ge/It/Sp/Du/Da/Sw)	1	
⚠	A3	RQTX1264-H	O/I BOOK (Fr)	1	
⚠	A3	RQTX1265-R	O/I BOOK (En/Po/Cz/Ru/Ur)	1	
	A4	N1DYYYY00010	AM LOOP ANTENNA	1	
	A5	RSAX0002	FM INDOOR ANTENNA	1	
	A6	RFA3327	SAFETY HOLDER	2	
	A7	XSN4+8FJK	SAFETY HOLDER SCREW (BLACK)	2	
	A8	RGQ0632-K	SAFETY HOLDER	1	
	A9	RMQX1082-K	WALL MOUNT BRACKET	2	
	A10	RKA0252-K	LEG CUSHION	2	
	A11	XSN3+10FJ	SAFETY HOLDER SCREW (SILVER)	1	

18.2. Electrical Replacement Parts List

Important Safety Notice

Components identified by ⚠ mark have special characteristics important for safety.
When replacing any of these components, use only manufacturer's specified parts.

RTL (Retention Time Limited)

Note: The marking (RTL) indicates that the Retention Time is Limited for this item.
After the discontinuation of this assembly in production, the item will continue to be available for a specific period of time. The retention period of availability is dependant on the type of assembly, and in accordance with the laws governing part and product retention. After the end of this period, the assembly will no longer be available.

Note:

- When replacing any of these components, be sure to use only manufacturer's specified parts shown in the replacement part list.
- The parenthesized indications on the Remarks column specify the destination & product color (Refer to the cover page for the information).
- Parts without these indications shall be used for all areas.
- This product uses a laser diode. Refer to "Precaution of Laser Diode".
- Capacitor value are in microfarads (uF) unless specified otherwise, P=Pico-farads (pF), F=Farads.
- Resistance values are in ohms, unless specified otherwise, 1K=1000 (OHM).
- All parts mentioned are supplied by PAVCSG unless indicated likewise.
- Parts mentioned [SPG] in the Remarks column are supplied by PAVC-CSG.

Safety	Ref. No.	Part No.	Part Name & Description	Qty	Remarks
			PRINTED CIRCUIT BOARDS		
	PCB1	REPX0914AA	PANEL P.C.B.	1	(RTL)
	PCB2	REPX0914AC	INTERLOCK SWITCH P.C.B.	1	(RTL)
	PCB3	REPX0915LA	MAIN P.C.B	1	(RTL)
	PCB4	REPX0915LB	iPhone P.C.B.	1	(RTL)
	PCB5	REPX0915LC	REMOTE SENSOR P.C.B.	1	(RTL)
	PCB6	REPX0915LD	TUNER P.C.B.	1	(RTL)
	PCB7	REPX0915LC	iPod OPEN SWITCH P.C.B.	1	(RTL)
	PCB8	REPX0915LF	MOTOR P.C.B.	1	(RTL)
	PCB9	REPX0916B	BUTTON P.C.B.	1	(RTL)
⚠	PCB10	REPX0917A	SMPS P.C.B.	1	(RTL)
	PCB11	REPX0918A	CD SERVO P.C.B.	1	(RTL)
⚠	PCB12	RFKBX4229D	BLUETOOTH MODULE	1	
			INTEGRATED CIRCUITS		
	IC52	VUEALLPT039	IC	1	[SPG]
	IC100	C0ABBA000159	IC	1	
	IC101	C2HBCY000072	IC	1	
	IC102	C0FBAK000026	IC	1	
	IC103	C1AB00003600	IC	1	
	IC320	C0ABBA000159	IC	1	
	IC700	C0DBZYY00448	IC	1	
	IC700	C0JBAR000587	IC	1	
	IC701	C0CBCDC00052	IC	1	
	IC701	C0DBZMC00006	IC	1	
	IC702	C0DBGYY00887	IC	1	
	IC800	C3EBFY000006	IC	1	
	IC801	RFKWMHC55M0	IC	1	
	IC803	C0EBE0000434	IC	1	

Safety	Ref. No.	Part No.	Part Name & Description	Qty	Remarks
	IC1000	C0DBAYY00462	IC	1	
	IC1005	C0DBGYY00887	IC	1	
	IC1006	C0DBEYY00123	IC	1	
	IC1008	C0CBCAC00358	IC	1	
	IC1009	C0DBAYY01077	IC	1	
	IC2002	C0JBAU000036	IC	1	
	IC2003	C0JBAE000438	IC	1	
	IC3001	C1ZBZ0004386	IC	1	
	IC6801	C0HBB0000057	IC	1	
	IC7001	MN6627947RB	IC	1	
	IC7002	C0GBY0000117	IC	1	
	IC7501	MFI341S2164	IC	1	
	IC7704	C3ABMY000027	IC	1	
	IC7851	C3EBFC000042	IC	1	
	IC7901	C0JBAR000586	IC	1	
	IC8000	C0JBAR000596	IC	1	
			TRANSISTORS		
	Q320	B1GBCFJN0038	TRANSISTOR	1	
	Q701	B1KAB0000021	TRANSISTOR	1	
	Q902	B1GBCFJN0038	TRANSISTOR	1	
	Q904	B1GBCFJN0038	TRANSISTOR	1	
	Q950	B1ADCE000012	TRANSISTOR	1	
	Q951	B1GFGCAA0001	TRANSISTOR	1	
	Q952	B1GFGCAA0001	TRANSISTOR	1	
	Q1000	B1DHCC000034	TRANSISTOR	1	
	Q1001	B1BABK000001	TRANSISTOR	1	
	Q3001	B1DHCC000034	TRANSISTOR	1	
	Q3002	B1DHCC000034	TRANSISTOR	1	
	Q7001	B1ADCE000012	TRANSISTOR	1	
	Q7601	B1ADCF000001	TRANSISTOR	1	
	Q7900	B1ADCF000001	TRANSISTOR	1	
	Q7901	B1ABCF000176	TRANSISTOR	1	
	Q7902	B1DHCC000034	TRANSISTOR	1	
	Q7903	B1ADCF000001	TRANSISTOR	1	
	QR100	B1GBCFJN0038	TRANSISTOR	1	
	QR801	B1GBCFJN0038	TRANSISTOR	1	

Safety	Ref. No.	Part No.	Part Name & Description	Qty	Remarks
	QR805	B1GBCFJN0038	TRANSISTOR	1	
	QR1000	B1GBCFJN0038	TRANSISTOR	1	
	QR1001	B1DHCC000034	TRANSISTOR	1	
	QR1002	B1GBCFJN0038	TRANSISTOR	1	
	QR2000	B1GBCFJN0038	TRANSISTOR	1	
	QR3001	B1GBCFJN0038	TRANSISTOR	1	
	QR7900	B1GBCFJN0038	TRANSISTOR	1	
			DIODES		
	D701	B0EBNR000045	DIODE	1	
	D702	B0ABSM000008	DIODE	1	
	D707	B0ACMQ000002	DIODE	1	
	D708	B0HCMM000019	DIODE	1	
	D715	B0BC02900004	DIODE	1	
	D717	B0JCME000035	DIODE	1	
	D857	B0ACCK000012	DIODE	1	
	D858	B0ACCK000012	DIODE	1	
	D900	B3AAB0000038	DIODE	1	
	D901	B3AEA0000129	DIODE	1	
	D902	LNJ926W8CRA	DIODE	1	
	D904	LNJ926W8CRA	DIODE	1	
	D1001	B0ACCK000012	DIODE	1	
	D1002	B0JCMD000066	DIODE	1	
	D1003	B0JCMD000066	DIODE	1	
	D1004	B0ACCK000012	DIODE	1	
	D1005	B0ACCK000012	DIODE	1	
	D1006	B0BC3R0A0262	DIODE	1	
	D1007	B0BC027A0264	DIODE	1	
	D1009	B0JAME000114	DIODE	1	
	D1011	B0EAMM000057	DIODE	1	
	D1012	B0JCMD000066	DIODE	1	
	D3001	B3EB00000058	DIODE	1	
	D3002	B3EB00000058	DIODE	1	
	D7341	B0ECKM000016	DIODE	1	
	D7342	B0ECKM000016	DIODE	1	
	D7343	B0ECKM000016	DIODE	1	
	D7650	B0BC5R6A0266	DIODE	1	
⚠	Z752	ERZVA5Z471	ZNR	1	
			VARISTOR		
	VA51	EZAEG2A50AX	ESD SUPRESSOR	1	
			SWITCHES		
	S641	K0L1BA000078	SW LEFT	1	
	S642	K0L1BA000078	SW RIGHT	1	
	S643	K0L1BA000078	SW CENTER	1	
	S644	K0L1BA000078	SW INTERLOCK	1	
	S645	K0L1BA000078	SW OPEN	1	
	S901	EVQ11G04M	SW POWER	1	
	S902	EVQ11G04M	SW iPod OPEN/ CLOSE	1	
	S903	EVQ11G04M	SW BLUETOOTH/ iPod	1	
	S904	EVQ11G04M	SW CD	1	
	S905	EVQ11G04M	SW RADIO/EXT-IN	1	
	S906	EVQ11G04M	SW STOP/CALL	1	
	S907	EVQ11G04M	SW PLAY/PAUSE/ CANCEL CALL	1	
	S911	EVQ11G04M	SW REV SKIP	1	
	S912	EVQ11G04M	SW FWD SKIP	1	
	S913	EVQ11G04M	SW VOL-	1	
	S914	EVQ11G04M	SW VOL+	1	
	S915	EVQ11G04M	SW CD OPEN/CLOSE	1	
	S7201	K0L1BA000158	SW RESET	1	
			RESETTABLE FUSE		
⚠	SW1	D4FB1R250006	RESETTABLE FUSE	1	
⚠	SW7900	D4FBR5000009	RESETTABLE FUSE	1	

Safety	Ref. No.	Part No.	Part Name & Description	Qty	Remarks
			CONNECTORS		
	CN51	K1MY09AA0124	9P CONNECTOR	1	
	CN102	K1KA02AA0180	2P CONNECTOR	1	
	CN106	K1KA02AA0180	2P CONNECTOR	1	
	CN300	K1MN15B00014	15P CONNECTOR	1	
	CN302	K1MY12AA0021	12P CONNECTOR	1	
	CN303	K1MY15AA0124	15P CONNECTOR	1	
	CN350	K1MY09AA0124	9P CONNECTOR	1	
	CN900	K1MY09AA0124	9P CONNECTOR	1	
	CN901	K1MY12AA0124	12P CONNECTOR	1	
	CN905	K1KA06A00452	6P CONNECTOR	1	
	CN1001	MFI514S0117	30P CONNECTOR	1	
	CN1002	K1KA05BA0014	5P CONNECTOR	1	
	CN6801	K1MN09AA0003	9P CONNECTOR	1	
	CN6802	K1MN12BA0148	12P CONNECTOR	1	
	CN7001	K1MN24BA0197	24P CONNECTOR	1	
	CN7002	K1MN27B00016	27P CONNECTOR	1	
	CN7002	K1MY27AA0124	27P CONNECTOR	1	
	CN7801	K1KA05BA0014	5P CONNECTOR	1	
	CN7901	K1KA05BA0014	5P CONNECTOR	1	
	P901	K1KA05AA0193	5P CONNECTOR	1	
	P904	K1KA02BA0061	2P CONNECTOR	1	
			COILS AND INDUC-TORS		
	K7701	J0JBC0000012	INDUCTOR	1	
	K7702	J0JBC0000012	INDUCTOR	1	
	K7703	J0JBC0000012	INDUCTOR	1	
	K7704	J0JBC0000012	INDUCTOR	1	
	LB51	J0JBC0000032	INDUCTOR	1	
	LB7905	J0JYC0000025	INDUCTOR	1	
	L51	G1CR18JA0020	INDUCTOR	1	
	L52	G2A380Y00002	COIL	1	
	L102	G1C150M00023	INDUCTOR	1	
	L103	G1C150M00023	INDUCTOR	1	
	L104	G1C150M00023	INDUCTOR	1	
	L105	G1C150M00023	INDUCTOR	1	
	L106	J0JYB0000013	INDUCTOR	1	
	L107	J0JYB0000013	INDUCTOR	1	
	L108	J0JBC0000015	INDUCTOR	1	
	L110	G1C100M00041	INDUCTOR	1	
	L111	G1C100M00041	INDUCTOR	1	
	L112	G1C100M00041	INDUCTOR	1	
	L113	G1C100M00041	INDUCTOR	1	
	L323	J0JBC0000030	INDUCTOR	1	
	L324	J0JBC0000030	INDUCTOR	1	
⚠	L702	G0B183E00004	LINE FILTER	1	
⚠	L703	G0B111H00003	LINE FILTER	1	
	L950	J0JBC0000019	INDUCTOR	1	
	L951	J0JBC0000019	INDUCTOR	1	
	L952	J0JBC0000019	INDUCTOR	1	
	L953	J0JHC0000118	INDUCTOR	1	
	L1005	J0JGC0000034	INDUCTOR	1	
	L1006	J0JGC0000071	INDUCTOR	1	
	L1007	J0JHC0000107	INDUCTOR	1	
	L1008	J0JGC0000071	INDUCTOR	1	
	L1100	J0JHC0000118	INDUCTOR	1	
	L1102	G1C101MA0249	INDUCTOR	1	
	L1103	J0JBC0000041	INDUCTOR	1	
	L1104	G0A330ZA0045	CHOKE COIL	1	
	L1106	G1C470MA0464	INDUCTOR	1	
	L2000	J0JBC0000015	INDUCTOR	1	
	L2001	J0JBC0000010	INDUCTOR	1	
	L2002	J0JBC0000010	INDUCTOR	1	
	L7001	J0JHC0000034	INDUCTOR	1	
	R2005	J0JYC0000096	INDUCTOR	1	
	R2011	J0JYC0000096	INDUCTOR	1	
			TRANSFORMERS		
⚠	T701	ETS28BT11GAC	MAIN TRANSFORMER	1	

Safety	Ref. No.	Part No.	Part Name & Description	Qty	Remarks
⚠	T1000	G4D1A0000117	SWITCHING TRANS-FORMER	1	
			PHOTO COUPLERS	1	
⚠	PC701	B3PBA0000503	PHOTO COUPLER	1	
⚠	PC702	B3PBA0000503	PHOTO COUPLER	1	
			TERMINALS		
	ZJ701	K4CZ01000027	TERMINAL	1	
	ZJ702	K4CZ01000027	TERMINAL	1	
	ZJ1000	K4CZ01000027	TERMINAL	1	
			OSCILLATORS		
	X51	H0A327200097	CRYSTAL OSCILLA-TOR	1	
	X100	H0J245500082	CRYSTAL OSCILLA-TOR	1	
	X801	H0A327200097	CRYSTAL OSCILLA-TOR	1	
	X802	H2B800400007	CRYSTAL OSCILLA-TOR	1	
	X7201	H2D169500017	CRYSTAL OSCILLA-TOR	1	
	X7205	H0J120500076	CRYSTAL OSCILLA-TOR	1	
			REMOCON IR SEN-SOR		
	IR921	B3RAC0000017	REMOCON IR SEN-SOR	1	
			FL DISPLAY		
	FL6801	A2BB00000179	LCD DISPLAY	1	
			FUSE		
⚠	F751	K5G312Y00007	FUSE PROTECTOR	1	
			FUSE PROTECTOR		
⚠	FP1000	K5H7512A0010	PROTECTOR	1	
			THERMISTORS		
	TH701	D4CAA5R10001	THERMISTOR	1	
	TH702	D4CC11040013	THERMISTOR	1	
			JACKS		
	JK51	K4ZZ02000103	JK FM ANT	1	
	JK52	K4AC02B00042	JK AM ANT	1	
	JK951	K2HC1YYB0033	JK AUX/EXT-IN	1	
	JK952	K2HC1YYB0033	JK HEADPHONE	1	
	JK1111	K1FY104B0011	USB CONNECTOR	1	
⚠	P751	K2AA2B000011	AC INLET	1	
			CHIP JUMPERS		
	K4	D0GBR00JA008	0 1/16W	1	
	K12	D0GBR00JA008	0 1/16W	1	
	K24	D0GBR00JA008	0 1/16W	1	
	K27	D0GBR00JA008	0 1/16W	1	
	K102	D0GBR00JA008	0 1/16W	1	
	K107	D0GBR00JA008	0 1/16W	1	
	K110	D0GDR00JA017	0 1/8W	1	
	K1001	D0GFR00JA017	0 1/4W	1	
	K1005	D0GDR00JA017	0 1/8W	1	
	K1006	D0GFR00JA017	0 1/4W	1	
	K1007	D0GFR00JA017	0 1/4W	1	

Safety	Ref. No.	Part No.	Part Name & Description	Qty	Remarks
	K1008	D0GBR00JA008	0 1/16W	1	
	K1009	D0GFR00JA017	0 1/4W	1	
	K1010	D0GFR00JA017	0 1/4W	1	
	K1011	D0GDR00JA017	0 1/8W	1	
	K1012	D0GFR00JA017	0 1/4W	1	
	K1013	D0GFR00JA017	0 1/4W	1	
	K1500	D0GBR00JA008	0 1/16W	1	
	K2001	D0GBR00JA008	0 1/16W	1	
	K7001	D0GBR00JA008	0 1/16W	1	
	K7011	D0GBR00JA008	0 1/16W	1	
	K7101	D0GBR00JA008	0 1/16W	1	
	K7102	D0GBR00JA008	0 1/16W	1	
	K7268	D0GBR00JA008	0 1/16W	1	
	K7724	D0GBR00JA008	0 1/16W	1	
	L100	D0GBR00JA008	0 1/16W	1	
	L303	D0GBR00JA008	0 1/16W	1	
	L321	D0GBR00JA008	0 1/16W	1	
	L322	D0GBR00JA008	0 1/16W	1	
	L325	D0GBR00JA008	0 1/16W	1	
	L350	D0GBR00JA008	0 1/16W	1	
	L701	D0GBR00JA008	0 1/16W	1	
	L954	J0JBC0000014	INDUCTOR	1	
	L955	J0JBC0000014	INDUCTOR	1	
	L956	D0GDR00JA017	0 1/8W	1	
	L1001	D0GBR00JA008	0 1/16W	1	
	L1002	D0GBR00JA008	0 1/16W	1	
	L1003	D0GBR00JA008	0 1/16W	1	
	L1004	D0GBR00JA008	0 1/16W	1	
	L1009	D0GBR00JA008	0 1/16W	1	
	L1024	D0GBR00JA008	0 1/16W	1	
	L1026	D0GBR00JA008	0 1/16W	1	
	L1107	D0GBR00JA008	0 1/16W	1	
	L6802	D0GBR00JA008	0 1/16W	1	
	L6806	D0GBR00JA008	0 1/16W	1	
	LB7901	D0GBR00JA008	0 1/16W	1	
	LB7902	D0GBR00JA008	0 1/16W	1	
	LB7903	D0GBR00JA008	0 1/16W	1	
	LB7904	D0GBR00JA008	0 1/16W	1	
	W1	D0GDR00JA017	0 1/8W	1	
	W6801	D0GDR00JA017	0 1/8W	1	
	W6802	D0GDR00JA017	0 1/8W	1	
	W6803	D0GDR00JA017	0 1/8W	1	
	W6804	D0GDR00JA017	0 1/8W	1	
	W6805	D0GDR00JA017	0 1/8W	1	
	W6806	D0GBR00JA008	0 1/16W	1	
	W6807	D0GDR00JA017	0 1/8W	1	
	W6808	D0GDR00JA017	0 1/8W	1	
	W6809	D0GDR00JA017	0 1/8W	1	
	W6810	D0GDR00JA017	0 1/8W	1	
	W6811	D0GDR00JA017	0 1/8W	1	
	W6812	D0GBR00JA008	0 1/16W	1	
	W6813	D0GDR00JA017	0 1/8W	1	
	W6814	D0GDR00JA017	0 1/8W	1	
	W6815	D0GDR00JA017	0 1/8W	1	
			RESISTORS		
	K7202	D0GB101JA008	100 1/16W	1	
	K7705	D0GB330JA008	33 1/16W	1	
	R51	D0GB102JA008	1K 1/16W	1	
	R52	D0GB102JA008	1K 1/16W	1	
	R53	D0GA472JA023	4.7K 1/16W	1	
	R54	D0GA472JA023	4.7K 1/16W	1	
	R55	D0GA221JA023	220 1/16W	1	
	R56	D0GB221JA008	220 1/16W	1	
	R57	D0GA102JA023	1K 1/16W	1	
	R59	D0GB222JA008	2.2K 1/16W	1	
	R61	D0GB473JA008	47K 1/16W	1	
	R62	D0GB473JA008	47K 1/16W	1	
	R64	D0GBR00JA008	0 1/16W	1	
	R100	D0GB102JA008	1K 1/16W	1	
	R101	D0GB102JA008	1K 1/16W	1	
	R102	D0GB102JA008	1K 1/16W	1	

Safety	Ref. No.	Part No.	Part Name & Description	Qty	Remarks
	R103	D0GB102JA008	1K 1/16W	1	
	R104	D0GB222JA008	2.2K 1/16W	1	
	R105	D0GB222JA008	2.2K 1/16W	1	
	R106	D0GB272JA008	2.7K 1/16W	1	
	R107	D0GB272JA008	2.7K 1/16W	1	
	R108	D0GB222JA008	2.2K 1/16W	1	
	R109	D0GB222JA008	2.2K 1/16W	1	
	R110	D0GB103JA008	10K 1/16W	1	
	R111	D0GB101JA008	100 1/16W	1	
	R112	D0GB330JA008	33 1/16W	1	
	R113	D0GB330JA008	33 1/16W	1	
	R114	D0GB330JA008	33 1/16W	1	
	R115	D0GB330JA008	33 1/16W	1	
	R116	D0GB330JA008	33 1/16W	1	
	R117	D0GB330JA008	33 1/16W	1	
	R118	D0GB330JA008	33 1/16W	1	
	R119	D0GB152JA008	1.5K 1/16W	1	
	R120	D0GBR00JA008	0 1/16W	1	
	R122	D0GB472JA008	4.7K 1/16W	1	
	R123	D0GB104JA008	100K 1/16W	1	
	R124	D0GB105JA008	1M 1/16W	1	
	R125	D0GB330JA008	33 1/16W	1	
	R126	D0GB6R8JA008	6.8 1/16W	1	
	R127	D0GB6R8JA008	6.8 1/16W	1	
	R128	D0GB6R8JA008	6.8 1/16W	1	
	R129	D0GB6R8JA008	6.8 1/16W	1	
	R130	D0GB330JA008	33 1/16W	1	
	R131	D0GB221JA008	220 1/16W	1	
	R132	D0GB221JA008	220 1/16W	1	
	R133	D0GB221JA008	220 1/16W	1	
	R134	D0GB330JA008	33 1/16W	1	
	R135	D0GB330JA008	33 1/16W	1	
	R136	D0GBR00JA008	0 1/16W	1	
	R137	D0GBR00JA008	0 1/16W	1	
	R138	D0GB473JA008	47K 1/16W	1	
	R140	D0GB101JA008	100 1/16W	1	
	R141	D0GBR00JA008	0 1/16W	1	
	R322	D0GB102JA008	1K 1/16W	1	
	R323	D0GB102JA008	1K 1/16W	1	
	R324	D0GB222JA008	2.2K 1/16W	1	
	R325	D0GB102JA008	1K 1/16W	1	
	R326	D0GB102JA008	1K 1/16W	1	
	R327	D0GB102JA008	1K 1/16W	1	
	R328	D0GB104JA008	100K 1/16W	1	
	R329	D0GB473JA008	47K 1/16W	1	
	R330	D0GB103JA008	10K 1/16W	1	
	R331	D0GB103JA008	10K 1/16W	1	
	R332	D0GB103JA008	10K 1/16W	1	
	R333	D0GB103JA008	10K 1/16W	1	
	R334	D0GB103JA008	10K 1/16W	1	
	R335	D0GB102JA008	1K 1/16W	1	
	R337	D0GB101JA008	100 1/16W	1	
	R338	D0GB222JA008	2.2K 1/16W	1	
	R339	D0GB101JA008	100 1/16W	1	
	R700	D0GB102JA008	1K 1/16W	1	
	R701	D0GB102JA008	1K 1/16W	2	
	R702	D0GB470JA008	47 1/16W	1	
	R703	D0GB104JA008	100K 1/16W	1	
	R703	ERJ8GEYJ683V	68K 1/4W	1	
	R704	D0GB104JA008	100K 1/16W	1	
	R704	ERJ8GEYJ683V	68K 1/4W	1	
	R705	D0GB104JA008	100K 1/16W	1	
	R706	D0GB102JA008	1K 1/16W	1	
	R706	D0GB104JA008	100K 1/16W	1	
	R707	D0GB104JA008	100K 1/16W	1	
	R708	D0GBR00JA008	0 1/16W	1	
	R709	D0GB104JA008	100K 1/16W	1	
	R710	D0GB102JA008	1K 1/16W	1	
	R710	ERJ3RED154V	150K 1/16W	1	
	R711	D0GB102JA008	1K 1/16W	1	
	R712	D0GBR00JA008	0 1/16W	1	
	R714	D0GB121JA008	120 1/16W	1	
	R716	D0GB473JA008	47K 1/16W	1	

Safety	Ref. No.	Part No.	Part Name & Description	Qty	Remarks
	R717	D0GB331JA008	330 1/16W	1	
	R718	ERX2SZJR15E	0.15 2W	1	
	R719	ERJ6GEYJ3R3V	3.3 1/8W	1	
	R720	ERJ3RBD243V	24K 1/16W	1	
	R721	D0GF100JA014	10 1/4W	1	
	R722	D0GB333JA008	33K 1/16W	1	
	R723	D0GD390JA017	39 1/8W	1	
	R724	ERJ12YJ155U	1.5M 1/2W	1	
	R725	D0GD101JA017	100 1/8W	1	
	R726	ERJ12YJ155U	1.5M 1/2W	1	
	R727	D0GB222JA008	2.2K 1/16W	1	
	R728	D0HB152ZA002	1.5K 1/16W	1	
	R732	D0GD106JA017	10M 1/8W	1	
	R743	D0GD273JA017	27K 1/8W	1	
	R744	D0GB475JA008	4.7M 1/16W	1	
	R745	D0GD106JA017	10M 1/8W	1	
	R746	D0GD224JA017	220K 1/8W	1	
	R747	D0GB102JA008	1K 1/16W	1	
	R748	D0GD106JA017	10M 1/8W	1	
	R749	D0GB103JA008	10K 1/16W	1	
	R801	D0GBR00JA008	0 1/16W	1	
	R802	D0GB224JA008	220K 1/16W	1	
	R803	D0GB101JA008	100 1/16W	1	
	R804	D0GB101JA008	100 1/16W	1	
	R805	D0GB472JA008	4.7K 1/16W	1	
	R806	D0GB101JA008	100 1/16W	1	
	R807	D0GB101JA008	100 1/16W	1	
	R808	D0GB101JA008	100 1/16W	1	
	R809	D0GB101JA008	100 1/16W	1	
	R810	D0GB101JA008	100 1/16W	1	
	R811	D0GB101JA008	100 1/16W	1	
	R812	D0GB101JA008	100 1/16W	1	
	R813	D0GB472JA008	4.7K 1/16W	1	
	R814	D0GB104JA008	100K 1/16W	1	
	R815	D0GB101JA008	100 1/16W	1	
	R816	D0GB101JA008	100 1/16W	1	
	R818	D0GB101JA008	100 1/16W	1	
	R819	D0GB101JA008	100 1/16W	1	
	R820	D0GB104JA008	100K 1/16W	1	
	R821	D0GB102JA008	1K 1/16W	1	
	R822	D0GB102JA008	1K 1/16W	1	
	R823	D0GB101JA008	100 1/16W	1	
	R824	D0GB101JA008	100 1/16W	1	
	R825	D0GB101JA008	100 1/16W	1	
	R826	D0GB104JA008	100K 1/16W	1	
	R827	D0GB101JA008	100 1/16W	1	
	R828	D0GB101JA008	100 1/16W	1	
	R829	D0GB101JA008	100 1/16W	1	
	R830	D0GB101JA008	100 1/16W	1	
	R831	D0GB101JA008	100 1/16W	1	
	R832	D0GB104JA008	100K 1/16W	1	
	R833	D0GB101JA008	100 1/16W	1	
	R835	D0GB101JA008	100 1/16W	1	
	R836	D0GB473JA008	47K 1/16W	1	
	R837	D0GB101JA008	100 1/16W	1	
	R838	D0GB103JA008	10K 1/16W	1	
	R839	D0GB101JA008	100 1/16W	1	
	R840	D0GB101JA008	100 1/16W	1	
	R841	D0GB101JA008	100 1/16W	1	
	R843	D0GB101JA008	100 1/16W	1	
	R845	D0GB472JA008	4.7K 1/16W	1	
	R846	D0GB472JA008	4.7K 1/16W	1	
	R847	D0GB104JA008	100K 1/16W	1	
	R853	D0GB101JA008	100 1/16W	1	
	R854	D0GB101JA008	100 1/16W	1	
	R855	D0GB101JA008	100 1/16W	1	
	R857	D0GB152JA008	1.5K 1/16W	1	
	R858	D0GB152JA008	1.5K 1/16W	1	
	R862	D0GB101JA008	100 1/16W	1	
	R863	D0GB101JA008	100 1/16W	1	
	R864	D0GB101JA008	100 1/16W	1	
	R868	D0GB101JA008	100 1/16W	1	
	R870	D0GB101JA008	100 1/16W	1	

Safety	Ref. No.	Part No.	Part Name & Description	Qty	Remarks
	R871	D0GB102JA008	1K 1/16W	1	
	R873	D0GB473JA008	47K 1/16W	1	
	R874	D0GB683JA008	68K 1/16W	1	
	R875	D0GB104JA008	100K 1/16W	1	
	R876	D0GB104JA008	100K 1/16W	1	
	R877	D0GB104JA008	100K 1/16W	1	
	R879	D0GB101JA008	100 1/16W	1	
	R880	D0GB101JA008	100 1/16W	1	
	R883	D0GB101JA008	100 1/16W	1	
	R884	D0GB101JA008	100 1/16W	1	
	R888	D0GB123JA008	12K 1/16W	1	
	R889	D0GB123JA008	12K 1/16W	1	
	R890	D0GB101JA008	100 1/16W	1	
	R892	D0GB101JA008	100 1/16W	1	
	R898	D0GB103JA008	10K 1/16W	1	
	R899	D0GB103JA008	10K 1/16W	1	
	R901	D0GBR00JA008	0 1/16W	1	
	R901	ERJ2GE0R00X	0 1/16W	1	
	R902	D0GBR00JA008	0 1/16W	1	
	R910	D0GB121JA008	120 1/16W	1	
	R911	D0GB122JA008	1.2K 1/16W	1	
	R912	D0GB152JA008	1.5K 1/16W	1	
	R913	D0GB222JA008	2.2K 1/16W	1	
	R914	D0GB332JA008	3.3K 1/16W	1	
	R916	D0GB221JA008	220 1/16W	1	
	R919	D0GB221JA008	220 1/16W	1	
	R920	D0GB470JA008	47 1/16W	1	
	R921	D0GB122JA008	1.2K 1/16W	1	
	R922	D0GB152JA008	1.5K 1/16W	1	
	R923	D0GB222JA008	2.2K 1/16W	1	
	R924	D0GB332JA008	3.3K 1/16W	1	
	R925	D0GB472JA008	4.7K 1/16W	1	
	R926	D0GB682JA008	6.8K 1/16W	1	
	R928	D0GB271JA008	270 1/16W	1	
	R929	D0GB221JA008	220 1/16W	1	
	R950	D0GB103JA008	10K 1/16W	1	
	R951	D0GB123JA008	12K 1/16W	1	
	R952	D0GB123JA008	12K 1/16W	1	
	R954	D0GBR00JA008	0 1/16W	1	
	R955	D0GF271JA017	270 1/4W	1	
	R956	D0GB101JA008	100 1/16W	1	
	R957	D0GF271JA017	270 1/4W	1	
	R958	D0GB471JA008	470 1/16W	1	
	R959	D0GF271JA017	270 1/4W	1	
	R960	D0GF271JA017	270 1/4W	1	
	R962	D0GB101JA008	100 1/16W	1	
	R963	D0GB471JA008	470 1/16W	1	
	R964	D0GB101JA008	100 1/16W	1	
	R965	D0GB101JA008	100 1/16W	1	
	R966	D0GB391JA008	390 1/16W	1	
	R967	D0GB391JA008	390 1/16W	1	
	R968	D0GB391JA008	390 1/16W	1	
	R969	D0GB391JA008	390 1/16W	1	
	R970	D0GB221JA008	220 1/16W	1	
	R971	D0GB102JA008	1K 1/16W	1	
	R972	D0GB102JA008	1K 1/16W	1	
	R973	D0GB391JA008	390 1/16W	1	
	R974	D0GB391JA008	390 1/16W	1	
	R981	D0GB104JA008	100K 1/16W	1	
	R984	D0GB104JA008	100K 1/16W	1	
	R1008	ERJ3RBD333V	33K 1/16W	1	
	R1010	D0GB332JA008	3.3K 1/16W	1	
	R1011	D0GB390JA008	39 1/16W	1	
	R1013	ERJ3RBD682V	6.8K 1/16W	1	
	R1014	ERJ3RBD472V	4.7K 1/16W	1	
	R1101	ERJ3RBD821V	820 1/16W	1	
	R1102	D0GD2R7JA017	2.7 1/8W	1	
	R1103	D0GB104JA008	100K 1/16W	1	
	R1104	D0GD2R7JA017	2.7 1/8W	1	
	R1105	ERJ3RBD473V	47K 1/16W	1	
	R1106	ERJ3RBD103V	10K 1/16W	1	
	R1110	ERJ3RBD473V	47K 1/16W	1	
	R1111	ERJ3RBD153V	15K 1/16W	1	

Safety	Ref. No.	Part No.	Part Name & Description	Qty	Remarks
	R1112	D0GB473JA008	47K 1/16W	1	
	R1115	D0GB123JA008	12K 1/16W	1	
	R1116	D0GB220JA008	22 1/16W	1	
	R1120	D0GB470JA008	47 1/16W	1	
	R1122	D0GB472JA008	4.7K 1/16W	1	
	R1123	D0GD102JA017	1K 1/8W	1	
	R1124	D0GD473JA017	47K 1/8W	1	
	R1125	D0GB104JA008	100K 1/16W	1	
	R1126	D0GD103JA017	10K 1/8W	1	
	R1127	D0GBR00JA008	0 1/16W	1	
	R1128	D0GB103JA008	10K 1/16W	1	
	R1311	D0GBR00JA008	0 1/16W	1	
	R1314	D0GBR00JA008	0 1/16W	1	
	R2000	D0GB103JA008	10K 1/16W	1	
	R2003	D0GB101JA008	100 1/16W	1	
	R2004	D0GB101JA008	100 1/16W	1	
	R2006	D0GA221JA023	220 1/16W	1	
	R2007	D0GA221JA023	220 1/16W	1	
	R2008	D0GA221JA023	220 1/16W	1	
	R3001	D0GB473JA008	47K 1/16W	1	
	R3002	D0GB473JA008	47K 1/16W	1	
	R3003	D0GB473JA008	47K 1/16W	1	
	R3004	D0GB474JA008	470K 1/16W	1	
	R3005	D0GB473JA008	47K 1/16W	1	
	R3006	D0GB473JA008	47K 1/16W	1	
	R6800	D0GBR00JA008	0 1/16W	1	
	R6804	D0GB104JA008	100K 1/16W	1	
	R6805	D0GB103JA008	10K 1/16W	1	
	R6806	D0GBR00JA008	0 1/16W	1	
	R6807	D0GBR00JA008	0 1/16W	1	
	R6808	D0GBR00JA008	0 1/16W	1	
	R7001	D0GB473JA008	47K 1/16W	1	
	R7002	D0GB152JA008	1.5K 1/16W	1	
	R7003	D0GB332JA008	3.3K 1/16W	1	
	R7004	D0GB102JA008	1K 1/16W	1	
	R7005	D0GB102JA008	1K 1/16W	1	
	R7006	D0GBR00JA008	0 1/16W	1	
	R7007	D0GBR00JA008	0 1/16W	1	
	R7111	D0GB103JA008	10K 1/16W	1	
	R7151	D0GBR00JA008	0 1/16W	1	
	R7158	D0GB330JA008	33 1/16W	1	
	R7205	D0GB102JA008	1K 1/16W	1	
	R7207	D0GB103JA008	10K 1/16W	1	
	R7208	D0GBR00JA008	0 1/16W	1	
	R7211	D0GB823JA008	82K 1/16W	1	
	R7212	D0GB821JA008	820 1/16W	1	
	R7213	D0GB272JA008	2.7K 1/16W	1	
	R7214	D0GB471JA008	470 1/16W	1	
	R7217	D0GB102JA008	1K 1/16W	1	
	R7218	D0GB102JA008	1K 1/16W	1	
	R7220	D0GB105JA008	1M 1/16W	1	
	R7221	D0GB101JA008	100 1/16W	1	
	R7253	D0GB101JA008	100 1/16W	1	
	R7254	D0GB102JA008	1K 1/16W	1	
	R7255	D0GB103JA008	10K 1/16W	1	
	R7262	D0GB101JA008	100 1/16W	1	
	R7264	D0GB101JA008	100 1/16W	1	
	R7265	D0GB101JA008	100 1/16W	1	
	R7266	D0GB101JA008	100 1/16W	1	
	R7267	D0GB102JA008	1K 1/16W	1	
	R7315	D0GB102JA008	1K 1/16W	1	
	R7321	D0GB152JA008	1.5K 1/16W	1	
	R7322	D0GB562JA008	5.6K 1/16W	1	
	R7323	D0GB332JA008	3.3K 1/16W	1	
	R7325	D0GB101JA008	100 1/16W	1	
	R7327	D0GB562JA008	5.6K 1/16W	1	
	R7328	D0GB273JA008	27K 1/16W	1	
	R7329	D0GB472JA008	4.7K 1/16W	1	
	R7331	D0GB473JA008	47K 1/16W	1	
	R7332	D0GB123JA008	12K 1/16W	1	
	R7335	D0GB101JA008	100 1/16W	1	
	R7336	D0GB100JA008	10 1/16W	1	
	R7340	D0GB102JA008	1K 1/16W	1	

Safety	Ref. No.	Part No.	Part Name & Description	Qty	Remarks
	R7341	D0GB122JA008	1.2K 1/16W	1	
	R7349	D0GB104JA008	100K 1/16W	1	
	R7501	D0GB101JA008	100 1/16W	1	
	R7502	D0GB101JA008	100 1/16W	1	
	R7503	D0GB103JA008	10K 1/16W	1	
	R7504	D0GB103JA008	10K 1/16W	1	
	R7505	D0GB103JA008	10K 1/16W	1	
	R7601	D0GB4R7JA008	4.7 1/16W	1	
	R7650	D0GB5R6JA008	5.6 1/16W	1	
	R7702	D0GBR00JA008	0 1/16W	1	
	R7707	D0GBR00JA008	0 1/16W	1	
	R7712	D0GBR00JA008	0 1/16W	1	
	R7717	D0GBR00JA008	0 1/16W	1	
	R7721	D0GBR00JA008	0 1/16W	1	
	R7731	D0GBR00JA008	0 1/16W	1	
	R7761	D0GB225JA008	2.2M 1/16W	1	
	R7853	D0GB332JA008	3.3K 1/16W	1	
	R7896	D0GB102JA008	1K 1/16W	1	
	R7900	D0GB222JA008	2.2K 1/16W	1	
	R7901	D0GB330JA008	33 1/16W	1	
	R7901	ERJ3GEYF433V	43K 1/10W	1	
	R7902	D0GB330JA008	33 1/16W	1	
	R7902	D0GB472JA008	4.7K 1/16W	1	
	R7903	D0GB223JA008	22K 1/16W	1	
	R7903	ERJ3GEYF753V	75K 1/10W	1	
	R7904	D0GB223JA008	22K 1/16W	1	
	R7904	D0GB562JA008	5.6K 1/16W	1	
	R7905	ERJ3GEYF513V	51K 1/10W	1	
	R7906	ERJ3GEYF513V	51K 1/10W	1	
	R7907	ERJ3GEYF513V	51K 1/10W	1	
	R7908	ERJ3GEYF513V	51K 1/10W	1	
	R7909	D0GB104JA008	100K 1/16W	1	
	R7910	D0GB472JA008	4.7K 1/16W	1	
	R8000	D0GB330JA008	33 1/16W	1	
	R8001	D0GB330JA008	33 1/16W	1	
	R8002	D0GB330JA008	33 1/16W	1	
			CAPACITORS		
	C51	F1H1H102A885	1000pF 50V	1	
	C52	F1H1A474A025	0.47uF 10V	1	
	C57	F1H1H120A889	12pF 50V	1	
	C58	F1H1H120A889	12pF 50V	1	
	C59	F1H1A105A004	1uF 10V	1	
	C60	F1H1A105A004	1uF 10V	1	
	C61	F1G1C104A077	0.1uF 16V	1	
	C62	F1G1C104A077	0.1uF 16V	1	
	C100	F1H1H221A885	220pF 50V	1	
	C101	F1H1H221A885	220pF 50V	1	
	C102	F1H1H472A885	4700pF 50V	1	
	C103	F1H1H472A885	4700pF 50V	1	
	C104	F1H1A105A036	1uF 10V	1	
	C106	F1H1A105A036	1uF 10V	1	
	C107	F1H0J106A009	10uF 6.3V	1	
	C108	F1H0J106A009	10uF 6.3V	1	
	C110	F1H1C104A120	0.1uF 16V	1	
	C111	F1H1C104A120	0.1uF 16V	1	
	C112	F1H1H100A888	10pF 50V	1	
	C113	F1H1H100A888	10pF 50V	1	
	C114	F1H1C104A120	0.1uF 16V	1	
	C115	F1H1C104A120	0.1uF 16V	1	
	C116	F1J1A106A043	10uF 10V	1	
	C117	F1J1A106A043	10uF 10V	1	
	C118	F1H1C104A120	0.1uF 16V	1	
	C119	F1H1C104A120	0.1uF 16V	1	
	C120	F1H1C104A120	0.1uF 16V	1	
	C121	F1H1A105A036	1uF 10V	1	
	C122	F1H1H272A885	2700pF 50V	1	
	C123	F1H1E273A101	0.027uF 25V	1	
	C124	F1H1A105A036	1uF 10V	1	
	C125	F2A1E2210099	220uF 25V	1	
	C126	F1K1E105A090	1uF 25V	1	
	C127	F2A1E2210099	220uF 25V	1	

Safety	Ref. No.	Part No.	Part Name & Description	Qty	Remarks
	C128	F1K1E105A090	1uF 25V	1	
	C129	F1L1E4750004	4.7uF 25V	1	
	C130	F1J1E105A171	1uF 25V	1	
	C131	F1J1E105A171	1uF 25V	1	
	C132	F1J1E105A171	1uF 25V	1	
	C133	F1J1E105A171	1uF 25V	1	
	C134	F1H1H222A885	2200pF 50V	1	
	C135	F1H1H222A885	2200pF 50V	1	
	C136	F1H1H222A885	2200pF 50V	1	
	C137	F1H1H222A885	2200pF 50V	1	
	C138	F1H1H104A013	0.1uF 50V	1	
	C139	F1H1H104A013	0.1uF 50V	1	
	C140	F1H1H104A013	0.1uF 50V	1	
	C141	F1H1H104A013	0.1uF 50V	1	
	C144	F1H0J106A009	10uF 6.3V	1	
	C145	F1H0J106A009	10uF 6.3V	1	
	C146	F1J1A106A043	10uF 10V	1	
	C147	F1J1A106A043	10uF 10V	1	
	C148	F1J1A106A043	10uF 10V	1	
	C149	F1H1C104A120	0.1uF 16V	1	
	C150	F1H1H100A888	10pF 50V	1	
	C151	F1H1H100A888	10pF 50V	1	
	C152	F1H1H103A885	0.01uF 50V	1	
	C153	F1H1H101A889	100pF 50V	1	
	C154	F1H1H101A889	100pF 50V	1	
	C157	F1H1H102A885	1000pF 50V	1	
	C158	F1H1H102A885	1000pF 50V	1	
	C159	F1H1H102A885	1000pF 50V	1	
	C160	F1H1H102A885	1000pF 50V	1	
	C161	F1H1H102A885	1000pF 50V	1	
	C162	F1H1H103A885	0.01uF 50V	1	
	C320	F1H1H222A885	2200pF 50V	1	
	C321	F1H1A105A036	1uF 10V	1	
	C322	F1H1C104A120	0.1uF 16V	1	
	C323	F3F0J226A057	22uF 6.3V	1	
	C324	F1H1A105A036	1uF 10V	1	
	C325	F1H1H221A885	220pF 50V	1	
	C326	F1H1H391A889	390pF 50V	1	
	C327	F1H1A105A036	1uF 10V	1	
	C328	F1H1A105A036	1uF 10V	1	
	C329	F1H1H470A889	47pF 50V	1	
	C330	F1H1H122A885	1200pF 50V	1	
	C331	F1H1C104A120	0.1uF 16V	1	
	C332	F2A1C101A234	100uF 16V	1	
	C333	F1H1C104A120	0.1uF 16V	1	
	C339	F1H1H103A885	0.01uF 50V	1	
	C351	F1H1A105A036	1uF 10V	1	
	C352	F1H1A105A036	1uF 10V	1	
	C545	F1H1A224A061	0.22uF 10V	1	
	C700	F1H1C104A120	0.1uF 16V	1	
	C701	F1J1A106A043	10uF 10V	1	
⚠	C702	F0CAF104A105	0.1uF	1	
	C702	F1H1C104A120	0.1uF 16V	1	
	C703	F1J1A106A043	10uF 10V	1	
	C703	F2A1E1020114	1000uF 25V	1	
	C704	F1H1C104A120	0.1uF 16V	1	
	C704	F1H2A221A009	220pF 100V	1	
	C705	F1H1A225A051	2.2uF 10V	1	
	C705	F1K2J1030001	0.01uF 630V	1	
	C706	F1H1A105A062	1uF 10V	1	
	C706	F2A2G1010017	100uF 400V	1	
	C707	F1J1A106A043	10uF 10V	1	
	C708	F1J1A106A043	10uF 10V	1	
	C709	F1H1H104A013	0.1uF 50V	1	
⚠	C710	F1BAF2220023	2200pF	1	
	C710	F1H1C104A120	0.1uF 16V	1	
	C711	F1H1H104A013	0.1uF 50V	1	
	C712	F1H1H104A013	0.1uF 50V	1	
	C713	F2A1H4R7A234	4.7uF 50V	1	
	C714	F1H1H102A219	1000pF 50V	1	
	C715	F1H1H102A219	1000pF 50V	1	
	C716	F1H1C224A074	0.22uF 16V	1	
	C717	F1H1C154A002	0.15uF 16V	1	

Safety	Ref. No.	Part No.	Part Name & Description	Qty	Remarks
	C718	F1H1E224A068	0.22uF 25V	1	
	C720	F1H1H1010005	100pF 50V	1	
	C721	F1H1C104A008	0.1uF 16V	1	
	C722	F1H1H560A230	56pF 50V	1	
	C723	F1H1H102A219	1000pF 50V	1	
⚠	C725	F0CAF104A105	0.1uF	1	
⚠	C727	F1BAF1020020	1000pF	1	
⚠	C728	F1BAF1020020	1000pF	1	
	C731	F1K3A2210002	220pF 1000V	1	
	C805	F1H1H220A889	22pF 50V	1	
	C806	F1H1H220A889	22pF 50V	1	
	C807	F1H1H102A885	1000pF 50V	1	
	C808	F1H1C104A120	0.1uF 16V	1	
	C812	F1H1H102A885	1000pF 50V	1	
	C813	F1H1H102A885	1000pF 50V	1	
	C819	F1H1H101A889	100pF 50V	1	
	C820	F1H1H101A889	100pF 50V	1	
	C825	F1H1A105A062	1uF 10V	1	
	C828	F2A1A330A010	33uF 10V	1	
	C831	F1H1H331A885	330pF 50V	1	
	C833	F1H1H223A219	0.022uF 50V	1	
	C871	F1H1H102A885	1000pF 50V	1	
	C872	F1H1H102A885	1000pF 50V	1	
	C873	F1H1H102A885	1000pF 50V	1	
	C874	F1H1H102A885	1000pF 50V	1	
	C875	F1H1H102A885	1000pF 50V	1	
	C879	F1H1H103A885	0.01uF 50V	1	
	C922	F1H1A105A036	1uF 10V	1	
	C950	F1J1A106A043	10uF 10V	1	
	C951	F1J1A106A043	10uF 10V	1	
	C952	F1H1C224A074	0.22uF 16V	1	
	C953	F1H1H472A885	4700pF 50V	1	
	C954	F1H1H472A885	4700pF 50V	1	
	C955	F1H1H102A885	1000pF 50V	1	
	C956	F1H1C224A074	0.22uF 16V	1	
	C957	F1H1H102A885	1000pF 50V	1	
	C958	F1H1A105A036	1uF 10V	1	
	C959	F1H1A105A036	1uF 10V	1	
	C960	F1H1H102A885	1000pF 50V	1	
	C961	F1H1H102A885	1000pF 50V	1	
	C993	F1H1H102A885	1000pF 50V	1	
	C1001	F1H1H153A885	0.015uF 50V	1	
	C1002	F1G1C223A091	0.022uF 16V	1	
	C1004	F1G1E562A097	5600pF 25V	1	
	C1008	F1H1H102A885	1000pF 50V	1	
	C1012	F1K1C226A121	22uF 16V	1	
	C1013	F1K1E1060001	10uF 25V	1	
	C1100	F1H1A225A051	2.2uF 10V	1	
	C1101	F1H1A105A062	1uF 10V	1	
	C1102	F1J1A106A043	10uF 10V	1	
	C1103	F1J1A106A043	10uF 10V	1	
	C1104	F1K1E105A090	1uF 25V	1	
	C1106	F1J1A106A043	10uF 10V	1	
	C1107	F1K1E1060001	10uF 25V	1	
	C1110	F2A1C1010033	100uF 16V	1	
	C1111	F2A1V330A379	33uF 35V	1	
	C1114	F1H1H222A885	2200pF 50V	1	
	C1115	F1H1C104A120	0.1uF 16V	1	
	C1117	F1J1A106A043	10uF 10V	1	
	C1118	F1H1C104A120	0.1uF 16V	1	
	C1119	F1K1E1060001	10uF 25V	1	
	C1120	F1H1H392A885	3900pF 50V	1	
	C1121	F2A1V330A379	33uF 35V	1	
	C1122	F2A1E4710114	470uF 25V	1	
	C1123	F1J1A106A043	10uF 10V	1	
	C1124	F1K1E105A090	1uF 25V	1	
	C1125	F1J1A106A043	10uF 10V	1	
	C1126	F1J1E4750002	4.7uF 25V	1	
	C1127	F1H1C104A120	0.1uF 16V	1	
	C1128	F1H1C104A120	0.1uF 16V	1	
	C1129	F1H1C104A120	0.1uF 16V	1	
	C1131	F1H1H104A013	0.1uF 50V	1	
	C1132	F1H1H102A885	1000pF 50V	1	

Safety	Ref. No.	Part No.	Part Name & Description	Qty	Remarks
	C1134	F1H1C104A120	0.1uF 16V	1	
	C1135	F1H1C104A120	0.1uF 16V	1	
	C1136	F2A1A1010024	100uF 10V	1	
	C1302	F1G1C104A077	0.1uF 16V	1	
	C1303	F1G1C104A077	0.1uF 16V	1	
	C1304	F1G1C104A077	0.1uF 16V	1	
	C2003	F1J1A106A043	10uF 10V	1	
	C2004	F1H1C104A120	0.1uF 16V	1	
	C2005	F1H1H330A889	33pF 50V	1	
	C2007	F1H1C104A120	0.1uF 16V	1	
	C2008	F1H1C104A120	0.1uF 16V	1	
	C3001	F1H1C104A008	0.1uF 16V	1	
	C3002	F1H1A105A004	1uF 10V	1	
	C3003	F1H0J106A009	10uF 6.3V	1	
	C6801	F2A1V220A184	22uF 35V	1	
	C6805	F1H1H102A885	1000pF 50V	1	
	C6806	F1H1H102A885	1000pF 50V	1	
	C6807	F1H1H102A885	1000pF 50V	1	
	C6808	F1H1H102A885	1000pF 50V	1	
	C6809	F1H1H102A885	1000pF 50V	1	
	C6810	F1H1H102A885	1000pF 50V	1	
	C6811	F1H1H102A885	1000pF 50V	1	
	C6814	F1H1H102A885	1000pF 50V	1	
	C6815	F1H1H102A885	1000pF 50V	1	
	C6816	F1H1H102A885	1000pF 50V	1	
	C6819	F1H1H102A885	1000pF 50V	1	
	C6820	F1H1H103A885	0.01uF 50V	1	
	C6824	F1H1H103A885	0.01uF 50V	1	
	C6825	ECA1AAK220XB	22uF 10V	1	
	C6826	F2A1V220A184	22uF 35V	1	
	C6827	F1H1H104A783	0.1uF 50V	1	
	C6828	F2A1V220A184	22uF 35V	1	
	C6829	F2A1V220A184	22uF 35V	1	
	C7000	F1H1H102A885	1000pF 50V	1	
	C7001	F1J1A106A043	10uF 10V	1	
	C7002	F1H1H223A219	0.022uF 50V	1	
	C7003	F1H1H223A219	0.022uF 50V	1	
	C7102	F1H1A474A025	0.47uF 10V	1	
	C7107	F1H1H223A219	0.022uF 50V	1	
	C7142	F1H1H332A013	3300pF 50V	1	
	C7150	F1H1C104A120	0.1uF 16V	1	
	C7151	F1H1C104A120	0.1uF 16V	1	
	C7152	F1G1A1040006	0.1uF 10V	1	
	C7154	F1H1C104A120	0.1uF 16V	1	
	C7155	F1H1A105A004	1uF 10V	1	
	C7156	F1H1A105A004	1uF 10V	1	
	C7157	F1H1H103A885	0.01uF 50V	1	
	C7158	F1H1C104A120	0.1uF 16V	1	
	C7159	F1H1C104A120	0.1uF 16V	1	
	C7160	F1H1C104A120	0.1uF 16V	1	
	C7161	F1G1A1040006	0.1uF 10V	1	
	C7162	F1G1A1040006	0.1uF 10V	1	
	C7163	F1G1A1040006	0.1uF 10V	1	
	C7166	F1H1H103A885	0.01uF 50V	1	
	C7204	F1H1H103A885	0.01uF 50V	1	
	C7205	F1H1H270A004	27pF 50V	1	
	C7206	F1H1H270A004	27pF 50V	1	
	C7207	F1J1A106A041	10uF 10V	1	
	C7208	F1J1A106A041	10uF 10V	1	
	C7213	F1H1A334A028	0.33uF 10V	1	
	C7216	F1H1H681A013	680pF 50V	1	
	C7217	F1G1A1040006	0.1uF 10V	1	
	C7218	F1H1C823A001	0.082uF 16V	1	
	C7223	F1J1A106A041	10uF 10V	1	
	C7225	F1H1H102A219	1000pF 50V	1	
	C7226	F1H1H102A219	1000pF 50V	1	
	C7230	F1H1H103A885	0.01uF 50V	1	
	C7233	F1H1H103A885	0.01uF 50V	1	
	C7234	F1H1C104A120	0.1uF 16V	1	
	C7235	F1J1A106A041	10uF 10V	1	
	C7236	F1J1A106A041	10uF 10V	1	
	C7237	F1G1A1040006	0.1uF 10V	1	
	C7238	F1H1C104A120	0.1uF 16V	1	

Safety	Ref. No.	Part No.	Part Name & Description	Qty	Remarks
	C7239	F1J1A106A041	10uF 10V	1	
	C7241	F1H1H102A219	1000pF 50V	1	
	C7243	D0GBR00JA008	0 1/16W	1	
	C7244	F1H1C153A001	0.015uF 16V	1	
	C7253	D0GBR00JA008	0 1/16W	1	
	C7263	F1G1A1040006	0.1uF 10V	1	
	C7264	F1G1A1040006	0.1uF 10V	1	
	C7265	F1G1A1040006	0.1uF 10V	1	
	C7267	F1G1A1040006	0.1uF 10V	1	
	C7268	F1H1H103A885	0.01uF 50V	1	
	C7269	F1H1A105A004	1uF 10V	1	
	C7315	F1H1A154A001	0.15uF 10V	1	
	C7334	F2G1A101A019	100uF 10V	1	
	C7335	F1H1H103A885	0.01uF 50V	1	
	C7338	F1H1H153A885	0.015uF 50V	1	
	C7339	F1H1H182A219	1800pF 50V	1	
	C7340	F1H1H102A219	1000pF 50V	1	
	C7341	F1J1A106A041	10uF 10V	1	
	C7352	F1H1H122A219	1200pF 50V	1	
	C7501	F1H1H331A013	330pF 50V	1	
	C7502	F1H1H103A885	0.01uF 50V	1	
	C7601	F1J1A106A041	10uF 10V	1	
	C7613	F1G1A1040006	0.1uF 10V	1	
	C7615	F1J1A106A041	10uF 10V	1	
	C7616	F1J1A106A041	10uF 10V	1	
	C7626	F1J1A106A041	10uF 10V	1	
	C7670	F1H1H103A885	0.01uF 50V	1	
	C7704	F1H1H150A971	15pF 50V	1	
	C7741	F1H1H103A885	0.01uF 50V	1	
	C7752	F1H1H103A885	0.01uF 50V	1	
	C7753	F1J1A106A041	10uF 10V	1	
	C7754	F1J1A106A041	10uF 10V	1	
	C7755	F1J1A106A041	10uF 10V	1	
	C7851	F1H1H103A885	0.01uF 50V	1	
	C7852	F1H1H331A013	330pF 50V	1	
	C7853	F1H1H331A013	330pF 50V	1	
	C7900	F1H1C104A120	0.1uF 16V	1	
	C7901	F1H1C104A120	0.1uF 16V	1	
	C7902	F1H1C104A120	0.1uF 16V	1	
	C7903	F1H1H103A885	0.01uF 50V	1	
	C7903	F1J1A4750002	4.7uF 10V	1	
	C8000	F1H1C104A120	0.1uF 16V	1	
			SERVICE FIXTURE AND TOOLS		
	SFT1	RFKZHC55K1	27P FFC (MAIN - CD SERVO)	1	
	SFT2	RFKZHC55K2	15P FFC (MAIN - REMOTE SENSOR)	1	
	SFT3	RFKZHC35	EXTENSION P.C.B.	1	

IPSG1103