Panasonic

ORDER NO. MD0412589C1

A6

Service Manual

MODEL	UNIT	
SC-TM53	SA-TM53 SB-TM53 SB-W53	STEREO FRONT SPEAKER SUB WOOFER

SC-TM53

Specifications

Potencia de salida	
SC-TM 53	Frontal (Bajo) 75W RCM por canal (5Ω) 1Khz, 10%DAT (Alto) 70W RCM por canal (5Ω) 1 kHz 10% DAT Sub Woofer 160W RCM 80 Hz (8Ω) 10% DAT

Bafles	SB-TM53
FRONTAL Bocina Super Tweeter Bocina Tweeter Bocina Woofer	 2.5 cm 6 cm 16 cm
IMPEDANCIA Frontal Alto Bajo	 - - - - - - 5 Ω 5 Ω
Dimensiones (b x h x l)	240 mm x 330 mm x 230mm
Peso:	3.2 kg aprox.

Amplificador	SA-TM53
Potencia de salida	4000 W (P.M.P.O)
Consumo de potencia	290 W
Alimentaciòn	127V ca 10% 60 Hz
Sencibilidad Aux:	250 mV
Rango de sintonìa AM:	520-1710MHz (paso de 0,2 MHz)
Rango de sintonìa FM:	87.9-107.9 MHz (paso de 0,2 MHz 87.5-108.0 MHz (paso de 0,1 MHz
Dimensiones (b x h x l)	250 mm x 330 mm x 341mm
Peso:	7.1 kg aprox

Bafles	SB-W53
FRONTAL Bocina Super Tweeter Bocina Tweeter Bocina Woofer	 - - - - - - - - - - - - - - - - - -
SUB WOOFER Sub Woofer	 16 cm
IMPEDANCIA Sub Woofer Alto Bajo	 8 Ω - - - - - - - - - - - -
Dimensiones (b x h x l)	240 mm x 330 mm x 267mm
Peso:	3.4 kg aprox.

Notes: Specifications are subject to change without notice. Mass and dimensions are approximate.Total harmonic distortion is measured by the digital spectrum analyzer.

© 2004 Matsushita Electric Industrial Co. Ltd.. All rights reserved. Unauthorized copying and distribution is a violation of law.

⚠ WARNING

This service information is designed for experienced repair technicians only and is not designed for use by the general public.
It does not contain warnings or cautions to advise non-technical individuals of potencial dangers in attemping to service a product.
Products powered by electricity should be serviced or repaired only by experienced professional technicians. Any attempt to service or repair the product or products dealt with in this service information by anyone else could result in serious injury or death.

Contents

1 Safety Precaution
1_1 Insulation Resistance Test
1_1_1 Caution for fuse replacement
2 Before Repair and Adjustment
3 Protection Circuitry
4 Prevention of Electro Static Discharge (ESD) to Electrostatically Sensitive (ES) Devices
5 Handling the Lead-free Solder
5_1 About lead free solder (PbF)
6 Handling Precautions For Traverse Deck
7 Precaution of Laser Diode
8 Accessories
9 Operation Procedures
10 Disassembly and Assembly of Main Component
10_1 Disassembly flow chart
10_2 Gear for servicing (jig) Information
10_3 Disassembly of Top Cabinet
10_4 Disassembly of CD Lid
10_5 Disassembly of Rear Panel
10_6 Disassembly of CD Mechanism Unit
10_7 Disassembly of Main P.C.B.
10_8 Disassembly of Sub-Power P.C.B.
10_9 Disassembly of Power P.C.B.
10_10 Disassembly of Transformer P.C.B.
10_11 Disassembly of Front Panel Unit
10_12 Disassembly of Deck Mechanism Unit
10_13 CD Mechanism Main Component Replacement Procedures
10_13_1 Replacement of the Traverse Deck
10_13_2 Replacement for the Disc Tray
10_13_3 Disassembly and reassembly for mechanism base drive unit
10_13_4 Replacement for the motor ass'y
10_14 Replacement for the pinch roller ass'y and head block
10_15 Replacement for the Deck motor ass'y, capstan belt A, capstan belt B and winding belt
10_16 Replacement for the cassette lid ass'y
10_17 Rectification for tape jam problem
11 Checking for major P.C.Bs
11_1 Checking of Main P.C.B.
11_2 Checking of Transformer P.C.B.
11_3 Checking of Panel, Deck & Deck Mechanism P.C.B.
11_4 Checking of Power P.C.B.
12 Self-Diagnostic Function
12_1 Self-diagnostic display
12_2 How to enter the Self-Diagnostic Function
12_3 Cassette Mechanism Test (For error code H01, H02, H03, F01)
12_4 CD Mechanism Test (F15, F26, F16, F17, F27, F28, F29, F30, H15 & H16)
12_5 To clear all Error code
12_6 To exit from Self-Diagnostic function
12_7 Power Amplifier Failure (F61)
12_8 Description of Error Code
12_8_1 Abnormality detection for Deck Mechanism block
12_8_2 Abnormality detection for CD/Changer block
12_8_3 Power supply related error detection
12_8_4 Error Code (CR20 Mechansim)
13 CD Test Mode Function
13_1 How to set CD test mode
13_2 CD Automatically Adjustment result indication
13_3 CD Mecha Aging Test Mode (CR20)
13_4 Micon ROM Checksum and Version Display Mode
14 Measurements and Adjustments
14_1 Cassette Deck Section
14_1_1 Tape Speed Adjustment (Deck 1/2)
14_1_2 Bias and Erase Voltage Check
14_1_3 Bias Frequency Adjustment (Deck 1/2)
14_2 Tuner Section
14_2_1 AM-IF Alignment
14_2_2 AM RF Adjustment
14_3 Alignment Points
14_3_1 Cassette Deck Section
14_3_2 Tuner Section
15 Block Diagram
16 Voltage Measurement
17 Schematic Diagram
17_1 (A) CD Servo Circuit
17_2 (B) Main (Tuner) Circuit
17_3 (B) Main Circuit
17_4 (C) Panel Circuit
17_5 (D) Transformer Circuit
17_6 (E) CD Detect Circuit, (F) Spindle Position Circuit, (G)CD Loading Circuit & (L) Sub-Power Circuit
17_7 (H) Power Circuit
17_8 (I) Deck Circuit & (J) Deck Mechanism Circuit
18 Printed Circuit Board
18_1 (A) CD Servo P.C.B.
18_2 (B) Main P.C.B.
18_3 (C) Panel P.C.B.
18_4 (D) Transformer P.C.B.
18_5 (E) CD Detect P.C.B., (F) Spindle Position P.C.B., (G) CD Loading P.C.B. & (K) Tuner Pack P.C.B.
18_6 (H) Power P.C.B. & (L) Sub-Power P.C.B.
18_7 (I) Deck P.C.B. & (J) Deck Mechanism P.C.B.
19 Wiring Connection Diagram
20 Illustration of IC's, Transistors and Diodes
21 Terminal Function of IC's
21_1 IC7002 (MN6627953HB) Servo processor/ Digital signal processor/ Digital filter/ D/A converter
21_2 IC7003 (AN8739SBTE2) Focus coil/ Tracking coil/ Traverse motor/ Spindle motor drive
21_3 IC2801 (C2CBJG000561) System Microprocessor
22 Troubleshooting Guide
23 Parts Location and Replacement Parts List
23_1 Deck Mechanism (RAA4502-S)
23_1_1 Deck Mechanism Parts Location
23_1_2 Deck Mechanism Parts List
23_2 CD Loading Mechanism (RD-DAC026-S)
23_2_1 CD Loading Mechanism Parts Location
23_2_2 CD Loading Mechanism Parts List
23_3 Cabinet
23_3_1 Cabinet Parts Location
23_3_2 Cabinet Parts List
23_4 Electrical Parts List
23_5 Packing Materials & Accessories Parts List
23_6 Packaging

1 Safety Precaution

(This “Safety Precaution” is applied only in U.S.A.)Before servicing, unplug the power cord to prevent an electric shock.

When replacing parts, use only manufacturer’s recommended components for safety.

Check the condition of the power cord. Replace if wear or damage is evident.

After servicing, be sure to restore the lead dress, insulation barriers, insulation papers, shields, etc.

Before returning the serviced equipment to the customer, be sure to make the following insulation resistance test

to prevent the customer from being exposed to a shock hazard.

1.1 Insulation Resistance Test

Unplug the power cord and short the two prongs of the plug with a jumper wire.
Turn on the power switch.
Measure the resistance value with ohmmeter between the jumper AC plug and each exposed metal cabinet part, such as screwheads, antenna, control shafts, handle brackets, etc.Measure the resistance value with ohmmeter between the jumper AC plugand each exposed metal cabinet part, such as screwheads, antenna, control shafts, handle brackets, etc.

Equipment with antenna terminals should read between 2.7M˜ and 3.9M˜ to all exposed parts*. (Fig.1)
Equipment without antenna terminals should read approximately infinity to all exposed parts. (Fig.2)
*Note : Some exposed parts may be isolated from the chassisby design. These will read infinity.
If the measurement is outside the specified limits, there is a possibility of a shock hazard. The equipment should be repaired and re-checked before it is returned to the customer.

Fig.1

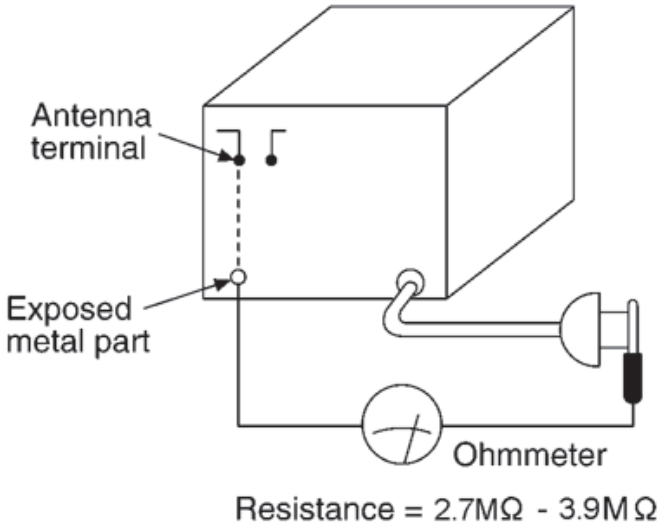

Fig.2

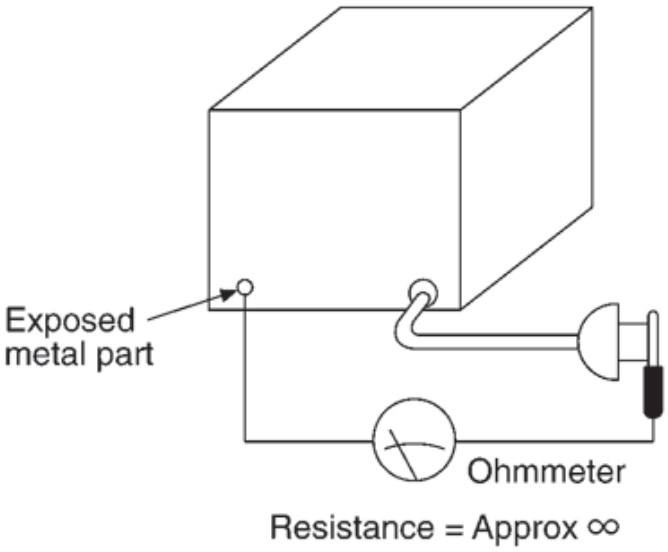

1.2 Caution for fuse replacement

(For English)
CAUTION:

Replace with the same type fuse:
(Manufacturer: LITTELFUSE, INC, Type: F1, 2.5A, 125V)

(For Canadian French)
ATTENTION:

Utiliser un fusible de rechanche de méme type:
(Manufacturer: LITTLEFUSE, INC, Type: F1, 2.5A, 125V)

2 Before Repair and Adjustment

Disconnect AC power, discharge Power Supply Capacitors C5820 and C5840 through a 10Ω, 5W resistor to ground.
DO NOT SHORT-CIRCUIT DIRECTLY (with a screwdriver blade, for instance), as this may destroy solid state devices.
After repairs are completed, restore power gradually using a variac, to avoid overcurrent.
Current consumption at AC 120V, 60 Hz in NO SIGNAL mode (volume min at CD mode) should be ~600mA.

3 Protection Circuitry

The protection circuitry may have operated if either of the following conditions are noticed:
· No sound is heard when the power is turned on.
· Sound stops during a performance.
The function of this circuitry is to prevent circuitry damage if, for example, the positive and negative speaker connection wires are
"shorted", or if speaker systems with an impedance less than the indicated rated impedance of the amplifier are used.
If this occurs, follow the procedure outlines below:

1.Turn off the power.
2.Determine the cause of the problem and correct it.
3.Turn on the power once again after one minute.

Note :
When the protection circuitry functions, the unit will not operate unless the power is first turned off and then on again.

4 Prevention of Electro Static Discharge (ESD) to Electrostatically Sensitive (ES) Devices

Some semiconductor (solid state) devices can be damaged easily by electricity. Such components commonly are called Electrostatically Sensitive (ES) Devices. Examples of typical ES devices are integrated circuits and some field-effect transistorsand semiconductor "chip" components. The following techniques should be used to help reduce the incidence of component damage caused by electro static discharge (ESD).

1. Immediately before handling any semiconductor component or semiconductor-equiped assembly, drain off any ESD on your body by touching a known earth ground. Alternatively, obtain and wear a commercially available discharging ESD wrist strap, whichshould be removed for potential shock reasons prior to applying power to the unit under test.

2. After removing an electrical assembly equiped with ES devices, place the assembly on a conductive surface such as aluminium foil, to prevent electrostatic charge build up or exposure of the assembly.

3. Use only a grounded-tip soldering iron to solder or unsolder ES devices.

4. Use only an anti-static solder remover device. Some solder removal devices not classified as "anti-static (ESD protected)" can generate electrical charge to damage ES devices.

5. Do not use freon-propelled chemicals. These can generate electrical charges sufficient to damage ES devices.

6. Do not remove a replacement ES device from its protective package until immediately before you are ready to install it. (Most replacement ES devices are packaged with leads electrically shorted together by conductive foam, aluminium foil orcomparable conductive material).

7. Immediately before removing the protective material from the leads of a replacement ES device, touch the protective material to the chassis or circuit assembly into which the device will be installed.

Caution
Be sure no power is applied to the chassis or circuit, and observe all other safety precautions.

8. Minimize body motions when handling unpackaged replacement ES devices. (Otherwise harmless motion such as the brushing together of your clothes fabric or the lifting of your foot from a carpeted floor can generate static electricity (ESD) sufficient todamage an ES device).

IMPORTANT SAFETY NOTICE

There are special components used in this equipment which are important for safety.
These parts are marked by ⚠ in the schematic diagrams, Exploded Views and replacement parts list. It is essential that these critical parts should be replaced with manufacturer´s specified parts to prevent shock, fire, or other hazards. Do not modify the original design without permission of manufacturer.

5 Handling the Lead-free Solder

5.1 About lead free solder (PbF)

Distinction of PbF P.C.B.:
P.C.B.s (manufactured) using lead free solder will have a PbF stamp on the P.C.B.

Caution:

- Pb free solder has a higher melting point than standard solder; Typically the melting point is 50 - 70°F (30 - 40°C) higher. Please use a high temperature soldering iron. In case of soldering iron with temperature control,please set it to 700 ± 20°F (370 ± 10°C).
- Pb free solder will tend to splash when heated too high (about 1100°F/600°C).
- When soldering or unsoldering, please completely remove all of the solder on the pins or solder area, and be sure to heat the soldering points with the Pb free solder until it melts enough.

6 Handling Precautions For Traverse Deck

The laser diode in the traverse deck (optical pickup) may break down due to potential difference caused by static electricity of clothes or human body.
So, be careful of electrostatic breakdown during repair of the traverse deck (optical pickup).

- Handling of traverse deck (optical pickup)

1. Do not subject the traverse deck (optical pickup) to static electricity as it is extremely sensitive to electrical shock.

2. To prevent the breakdown of the laser diode, an antistatic shorting pin is inserted into the flexible board (FFC board).

3. Take care not to apply excessive stress to the flexible board (FFC board). When removing or connecting the short pin, finish the job in as short time as possible.

4. Do not turn the variable resistor (laser power adjustment). It has already been adjusted.

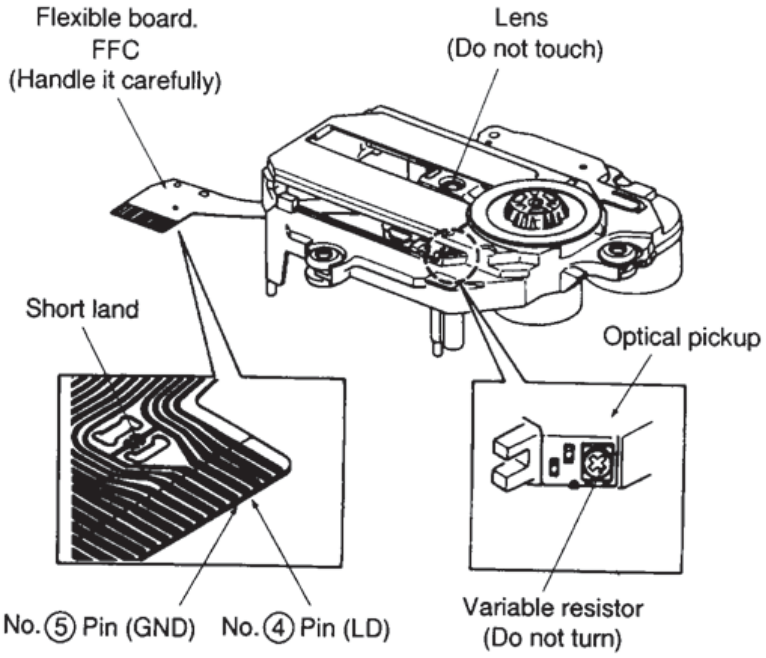

Grounding for electrostatic breakdown prevention

1. Human body grounding
Use the anti-static wrist strap to discharge the static electricity from your body.

2. Work table grounding
Put a conductive material (sheet) or steel sheet on the area where the traverse deck (optical pickup) is place, and ground the sheet.

Caution :
The static electricity of your clothes will not be grounded through the wrist strap. So, take care not to let your clothes touch the traverse deck (optical pickup).

Caution when replacing the Traverse Deck
The traverse deck has a short point shorted with solder to protect the laser diode against electrostatics breakdown. Be sure to remove the solder from the short point before making connections.

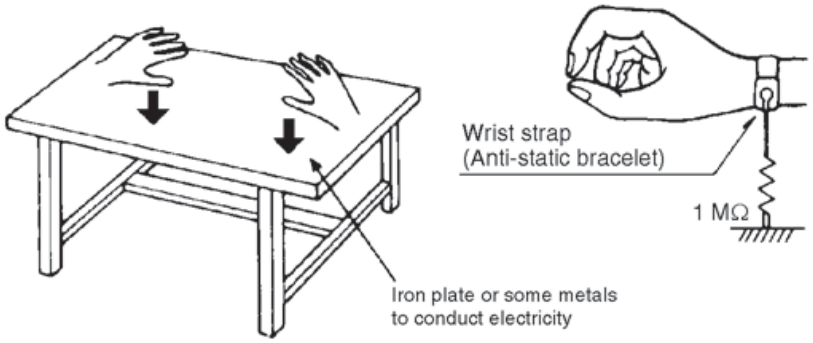

7 Precaution of Laser Diode

CAUTION:

This unit utilizes a class 1 laser.

Invisible laser radiation is emitted from the optical pickup lens.

Wavelength: 780nm

When the unit is turned on:

1. Do not look directly into the pick up lens.

2. Do not use optical instruments to look at the pick up lens.

3. Do not adjust the preset variable resistor on the pickup lens.

4. Do not disassemble the optical pick up unit.

5. If the optical pick up is replaced, use the manufacturer's specified replacement pick up only.

6. Use of control or adjustments or performance of procedures other than those specified herein may result in hazardous radiation exposure.

CAUTION!

THIS PRODUCT UTILIZES A LASER.USE OF CONTROLS OR ADJUSTMENTS OR PERFORMANCE OF PROCEDURES OTHER THAN THOSE SPECIFIED HEREIN
MAY RESULT IN HAZARDOUSRADIATION EXPOSURE.

Use of caution label (Except for U.S.A.)

CAUTION	– INVISIBLE LASER RADIATION WHEN OPEN. AVOID EXPOSURE TO BEAM. IEC60825-1 / Class 3b
VARNING	– OSYNLIG LASERSTRÅLNING NÄR DENNA DEL ÄR ÖPPNAD. BETRAKTA EJ STRÅLEN.
ADVARSEL	– USYNLIG LASERSTRÅLING VED ÅBNING. UNDGÅ UDSÆTTELSE FOR STRÅLING.
ADVARSEL	– USYNLIG LASERSTRÅLING NÅR DEKSEL ÅPNES. UNNGÅ EKSPONERING FOR STRÅLEN.
VARO!	AVATTAESSA OLET NÄKYMÄTÖNTÄ ALTTIINA LASERSÄTEILYLLE. ÄLÄ KATSO SÄTEESEEN.
VORSICHT	– UNSICHTBARE LASERSTRAHLUNG, WENN ABDECKUNG GEÖFFNET. NICHT DEM STRAHL AUSSETZEN.
ATTENTION	– RAYONNEMENT LASER INVISIBLE EN CAS D'OUVERTURE. EXPOSITION DANGEREUSE AU FAISCEAU.
注意	– 打开时有不可见激光辐射。避免激光束照射。
注意	– ここを開くと不可視レーザー光が出ます。ビームを見たり、触れたりしないで下さい。

Inside of product

8 Accessories

Remote Control
NZQAHB000054
(1 Pc)

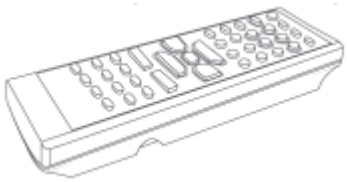

FM Antenna
RSA0006-L
(1 Pc)

AC Cord
SJA168-1A
(1 Pc)

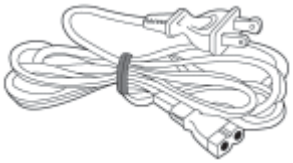

AM Loop Antenna
N1DAAAA00001
(1 Pc)

Controles del Panel Frontal

Aparato principal

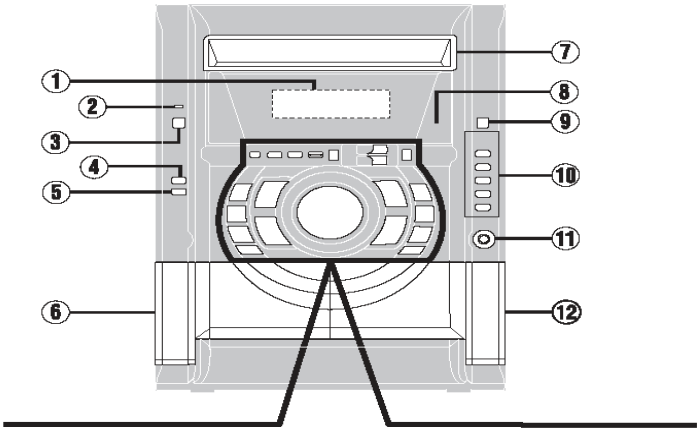

① Visualizador
② Indicador de alimentación de CA [AC IN]
Este indicador se encenderá cuando el aparato esté conectado a la alimentación de CA.
③
Interruptor de alimentación en espera/conectada [⏻ /I, POWER]
Pulse este interruptor para cambiar el aparato del modo de alimentación conectada al modo de alimentación en espera o viceversa. En el modo de alimentación en espera, el aparato consume una pequeña cantidad de corriente.
④ Botón H.BASS [H.BASS] .....
⑤ Botón de altavoz de subgraves [SUBWOOFER] .....
⑥ Portacasete de la platina 1 .....
⑦ Bandeja de discos
⑧ Sensor de señal del mando a distancia .....
⑨ Botón de apertura/cierre de la bandeja de CD [⏏ , OPEN/CLOSE] .....
⑩ Botones de reproducción directa CD [1- 5] .....
⑪ Toma de auricular [PHONES] .....
⑫ Portacasete de la platina 2 .....

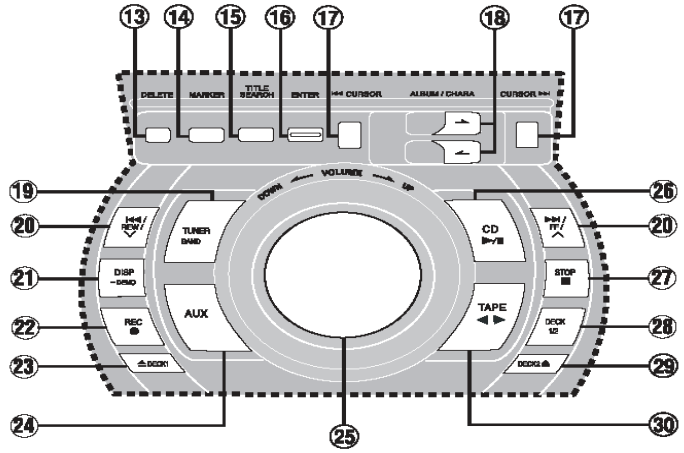

Consola central

⑬ Botón de borrado [DELETE] .....
⑭ Botón para la marcación de memoria/recuperación [MARKER] .....
⑮ Botón selector del modo de búsqueda de títulos [TITLE SEARCH] .....
⑯ Botón de introducción [ENTER] .....
⑰ Botones del cursor [⏮ CURSOR, CURSOR ⏭] .....
⑱ Botones de salto de álbum, caracteres [⏶ , ALBUM/CHARA, ⏷ ,ALBUM/CHARA] .....
⑲ Botón selector de sintonizador/banda [TUNER, BAND] .....
⑳ Botones de salto/búsqueda de CD, avance rápido/rebobinado de cinta, sintonización/selección de canales presintonizados y ajuste de la hora [⏮ /REW/ ⌄, ⏭ FF/ ⌃] .....
㉑ Botón de visualización, demostración [DISP,–DEMO] .....
㉒ Botón de grabación [● , REC].....
㉓ Botón de apertura de la platina 1 [⏏ DECK1].....
㉔ Botón del equipo auxiliar [AUX] .....
㉕ Control de volumen [VOLUME DOWN, UP] .....
㉖ Botón de reproducción/pausa de CD [▶/❚❚ , CD] .....
㉗ Botón de parada/cancelación de programas [■ , STOP] .....
㉘ Botón selector de platina [DECK 1/2].....
㉙ Botón de apertura de la platina 2 [DECK2 ⏏] .....
㉚ Botón para la dirección y reproducción de la cinta [◀▶, TAPE] .....

Mando a distancia

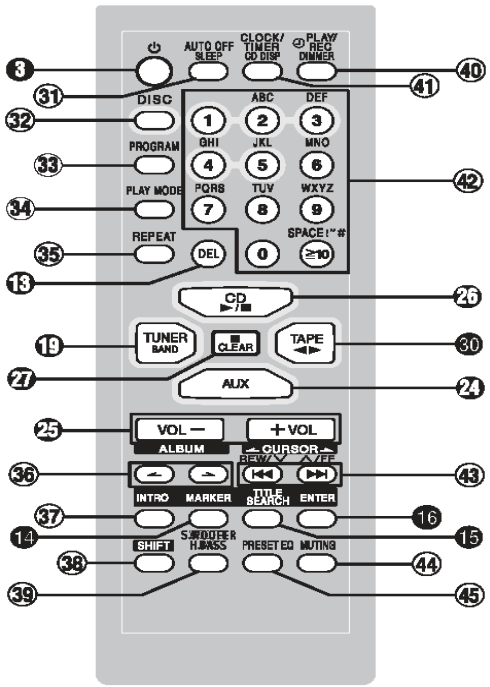

Los botones como el ❸ funcionan exactamente igual que los botones del aparato principal.

㉛ Botón del temporizador para dormir + apagado automático [SLEEP, AUTO OFF] .....
㉜ Botón de disco [DISC] .....
㉝ Botón de programas [PROGRAM] .....
㉞ Botón selector del modo de reproducción [PLAY MODE] .....
Utilícelo para seleccionar el modo de reproducción de CD, el modo de sintonización, el modo de FM, el modo de la inversión de cinta y la platina.
㉟ Botón de repetición [REPEAT] .....
㊱ Botones de salto de álbumes [⏶ , ⏷, ALBUM] .....
㊲ Botón de introducción [INTRO] .....
㊳ Botón de cambio [SHIFT]
Para utilizar las funciones etiquetadas en color anaranjado *:
Mientras pulsa [SHIFT], pulse el botón correspondiente.
*Para los botones [AUTO OFF], [CLOCK/TIMER], [⏲ PLAY/REC] y [S.WOOFER]
㊴ Botón H.BASS + subgraves [H.BASS, S.WOOFER].....
㊵ Botón de reducción de la iluminación del visualizador + temporizador de reproducción/grabación [DIMMER, ⏲ PLAY/REC] .....
㊶ Botón de visualización de CD + reloj/temporizador [CD DISP, CLOCK/TIMER] .....
㊷ Botones numerados y botones de caracteres [≧ 10, 1–9, 0, A–Z, SPACE!"#] .....
㊸ Botones de salto/búsqueda de CD, avance rápido/rebobinado de cinta, sintonización/selección de canales presintonizados, ajuste de la hora y cursor [⏮ , REW/ ⌄ , ⏶ CURSOR, ⏭, ⌃/FF, CURSOR ⏷] .....
㊹ Botón de silenciamiento [MUTING] .....
㊺ Botón selector de efectos del ecualizador preajustado [PRESET EQ] .....

Información de Discos Compactos

Selección de disco

Este aparato puede reproducir discos CD-R y CD-RW de audio del formato MP3 y CD-DA (audio digital) que hayan sido finalizados (un proceso que permite a los reproductores CD-R/CD-RW reproducir discos CD-R y CD-RW) tras finalizar la grabación.
Algunos CD-R y CD-RW tal vez no puedan ser reproducidos debido a la condición de la grabación.

Tipo de disco	Logotipo	Indicaciones utilizadas en las instrucciones
Audio CD	COMPACT disc DIGITAL AUDIO	CD
CD-R/RW	—	CD MP3 (Dependiendo del formato de grabación → consulte más arriba)

No:
- Utilice discos de forma irregular.
- Coloque etiquetas y pegatinas extra.
- Utilice discos con etiquetas y pegatinas despegadas o que tengan adhesivo que sale por debajo de ellas.
- Ponga cubiertas para impedir las rayaduras ni alguna otra clase de accesorio.
- Escriba nada en los discos.
- Limpie los discos con líquidos. (Límpielos pasando un paño blando y seco.)
- Utilice discos impresos con impresoras de etiquetas de venta en el comercio.

Para evitar daños

Tenga siempre en cuenta los puntos siguientes:
- Cargue solamente 1 disco compacto en la bandeja.
- Pare siempre el cambiador antes de introducir o cambiar discos compactos. No cambie los discos compactos mientras se reproduzca un disco.
- Ponga el sistema sobre una superficie plana y nivelada.
- Antes de mover el sistema, descargue siempre todos los discos compactos.

No:
- Coloque el aparato encima de revistas, superficies inclinadas, etc.
- Mueva el aparato mientras se abre/cierra una bandeja, ni cuando tenga discos en su interior.
- Ponga nada que no sean discos en las bandejas.
- Utilice discos de limpieza ni discos que estén deformados o agrietados.
- Desconecte el cable de alimentación de CA de la toma de CA durante la operación de cambio de un disco.

Información sobre MP3

Este aparato puede reproducir archivos MP3 grabados en CD-R/RW con un ordenador.
Los archivos son tratados como pistas y las carpetas como álbumes.
Este aparato puede tener acceso a un máximo de 999 pistas, 255 álbumes y 20 sesiones.

Cuando se hagan archivos MP3 para reproducirlos en esta unidad

Formato de disco
Los discos deben cumplir con la norma ISO9660 nivel 1 ó 2 (excepto para los formatos extendidos).

Formato de archivo
Los archivos MP3 deben tener la extensión ".MP3" o ".mp3".

Para reproducir en cierto orden
Prefije los nombres de las carpetas y los archivos con números de 3 dígitos en el orden en que quiera reproducirlos.
Los archivos pueden no grabarse en el orden numerado si los prefijos tienen números de dígitos diferentes. Por ejemplo: 1track.mp3, 2track.mp3, 10track.mp3.
Sin embargo, algunos software de escritura puede que también hagan que la grabación se realice en orden diferente.

Ejemplo:

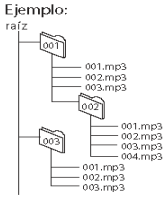

MPEG La tecnología de decodificación de audio Layer-3 autorizada por Fraunhofer IIS y Thomson multimedia.

Limitaciones de la reproducción MP3

- Este aparato no es compatible con el formato de escritura de paquete.
- Cuando se graben datos MP3 y CD-DA en el disco durante cierto número de sesiones:
  - Si la primera sesión contiene grabaciones MP3, el aparato reproducirá desde el MP3 hecho en esa sesión hasta la sesión anterior a las primeras grabaciones CD-DA.
  - Si la primera sesión contiene grabaciones CD-DA, el aparato reproducirá solamente las grabaciones hechas en esa sesión. Las sesiones posteriores se ignorarán.
- Algunos MP3 puede que no se reproduzcan debido a la condición del disco o la grabación.
- Las grabaciones no se reproducirán necesariamente en el orden en que usted las grabó.

10 Disassembly and Assembly of Main Component

"ATTENTION SERVICER"
Some chassis components may have sharp edges. Be careful when disassembling and servicing.

1.-This section describes procedures for checking the operation of the major printed circuit boards and replacing the main components.

2.-For reassembly after operation checks or replacement, reverse the respective procedures.
Special reassembly procedures are described only when required.

3.-Select items from the following index when checks or replacement are required.

4.-Refer to the Parts No. on the page of "Parts Location and Replacement Parts List" (Section 23), if necessary.

10.1 Disassembly flow chart

The following chart is the procedure for disassembling the casing and inside parts for internal inspection when carrying out the servicing.
To assemble the unit, reverse the steps shown in the chart as below.

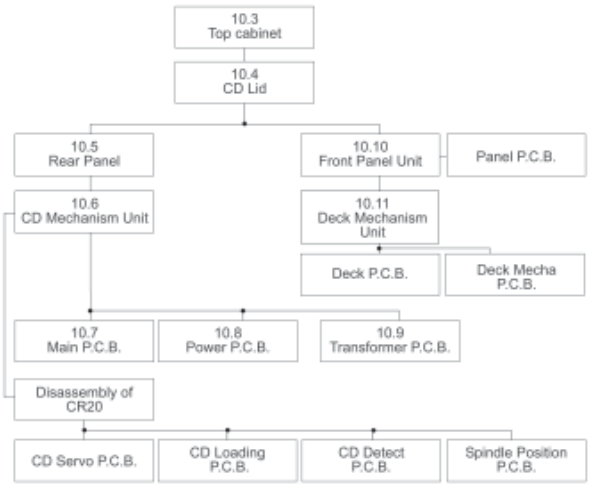

10.2 Gear for servicing (jig) Information

1.-This unit has a gear which is used for checking items (Open/Close of disc tray, up/down operation of traverse unit by manually) when servicing.
2.-For preparation of gear (for servicing), perform the procedures as follows.
3.-In case of re-servicing the same set, the "gear for servicing" may has been taken off because it has been used. The "gear for servicing" must be stored.

. Remove the gear provided with mechanism cover as shown below.

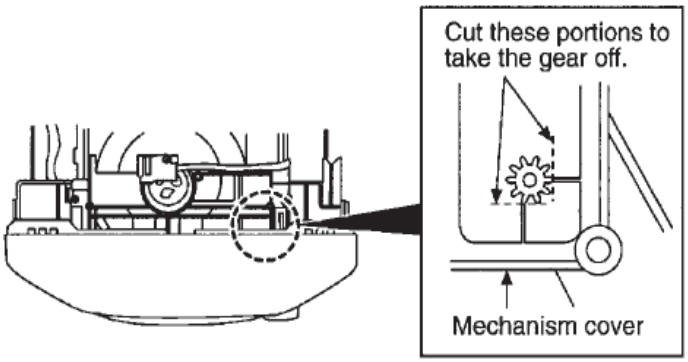

Insert the hexagonal screwdriver (2mm) into the gear, and then project the tip of screwdriver for 1~ 2 mm in length.

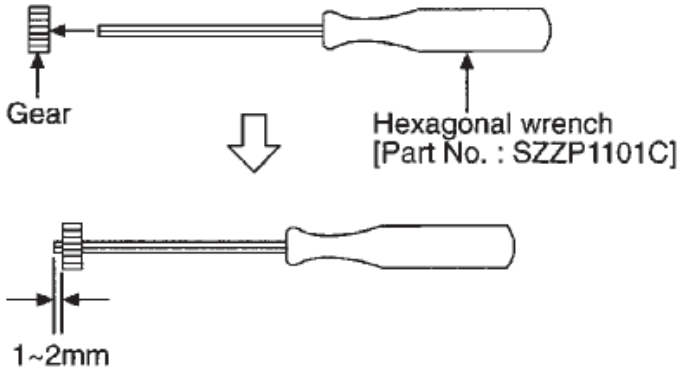

(Preparation of gear as jig is completed.)

10.3 Disassembly of Top Cabinet

Step 1 Remove 2 screws at each side and 5 screws at rear panel.

Step 2 Lift up both sides of the top cabinet, push the top cabinet towards the rear and remove the top cabinet.

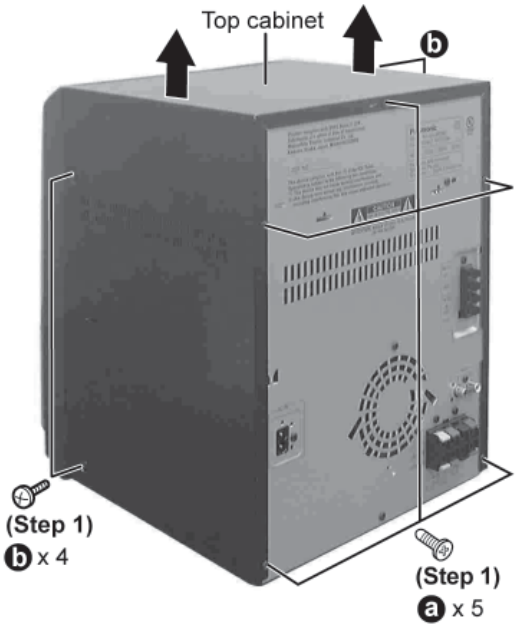

10.4 Disassembly of CD Lid

(The CD changer unit can be removed after the CD Lid is removed)

. Follow the (Step 1) - (Step 2) of Item 10.3 - Disassembly of Top Cabinet

•

. **Opening the disc tray automatically (Using Power Supply)**

•

Step 1 Connect the AC power cord.
Step 2 Press the POWER button to power up the main unit.

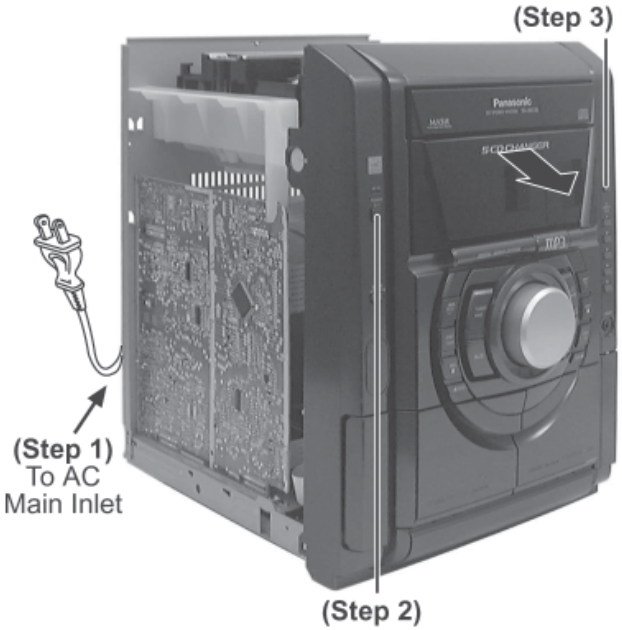

Step 3 Press the OPEN/CLOSE button, the disc tray will open automatically.

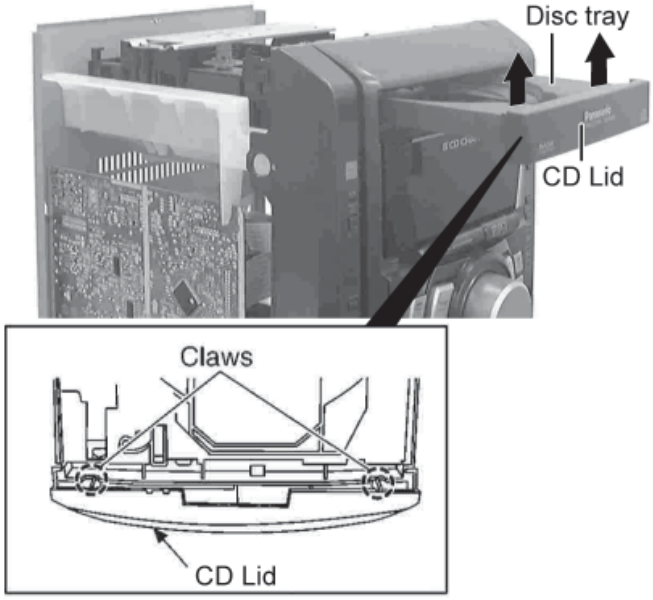

Step 4 Release the 2 claws, and then remove the CD Lid.
Step 5 Press the OPEN/CLOSE button, the disc tray will close.

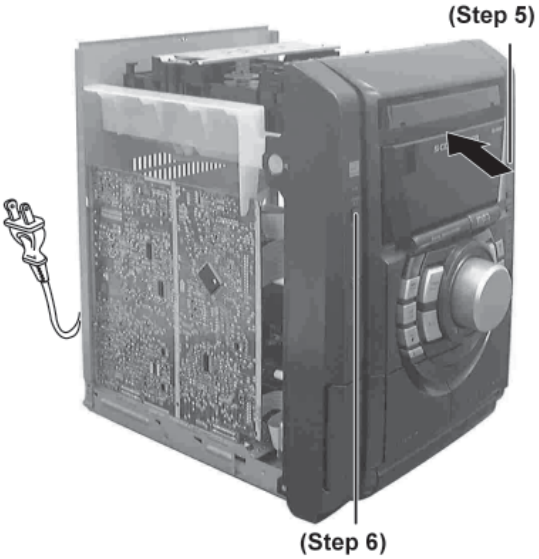

Step 6 Press the POWER button to turn the power off.

- **[Opening the disc tray manually (Using service tools)]**

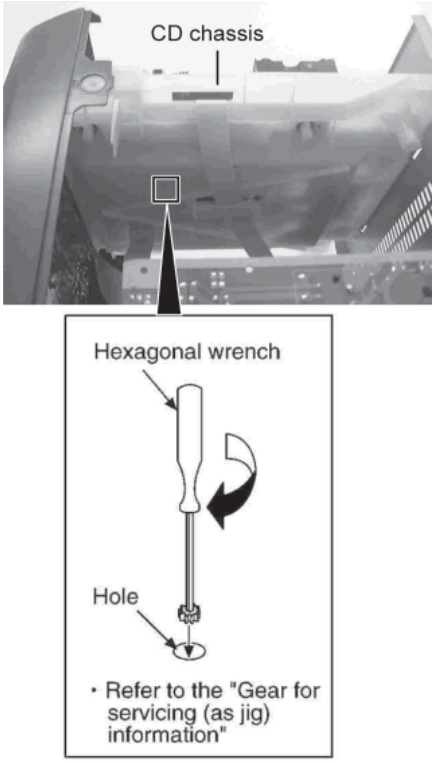

Step 1 Insert the gear tool into the hole on the underside of CD chassis and then rotate in the direction of arrow. The disc tray will be opened.

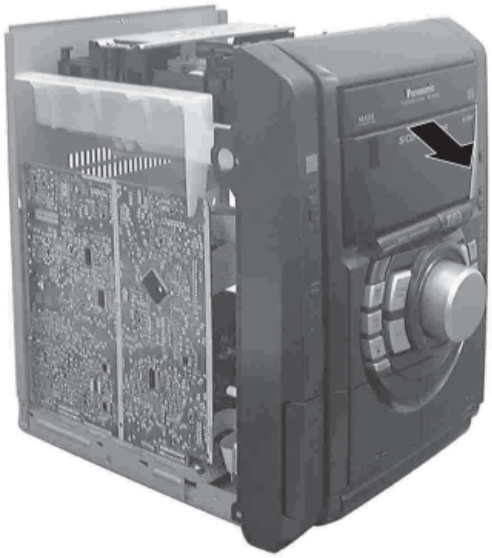

Step 2 Release the 2 claws, and then remove the CD lid cover.

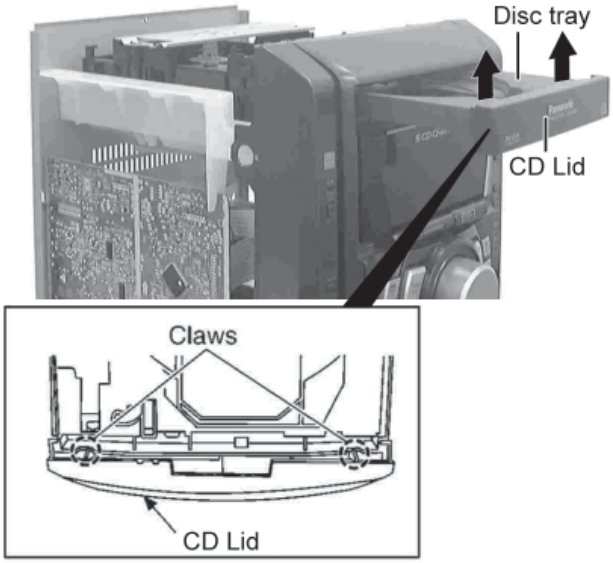

Step 3 Repeat Step 2 but rotate the gear tools in anti-clockwise direction

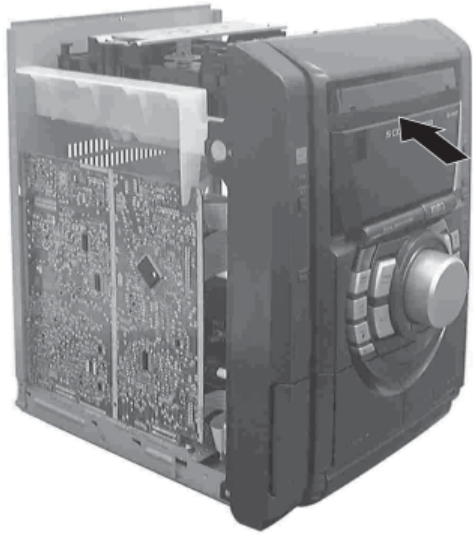

Step 4 The disc tray will be closed.

10.5 Disassembly of Rear Panel

• Follow the (Step 1) - (Step 2) of Item 10.2 - Disassembly of Top Cabinet

Step 1 Remove 6screws and disconnect wire CN2810 (Fan) at rear cabinet as shown.

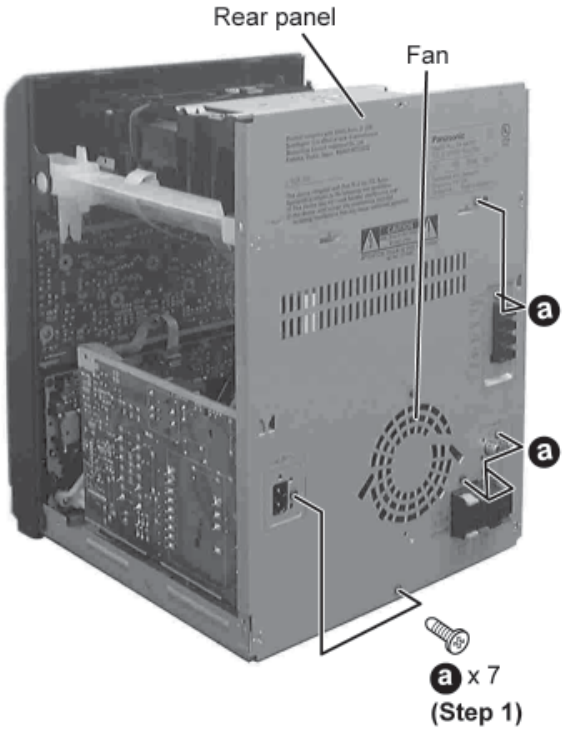

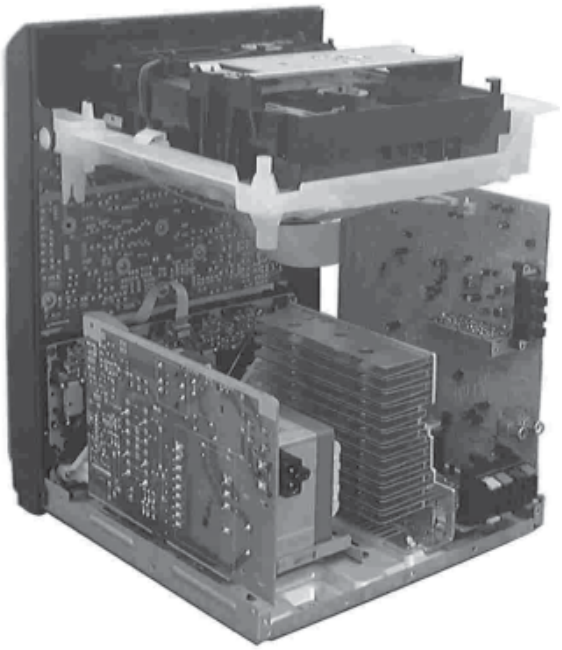

10.6 Disassembly of CD Mechanism Unit

• Follow the (Step 1) - (Step 2) of Item 10.3 - Disassembly of Top Cabinet

Step 1 Remove one screw at rear panel.

Step 2 Detach the FFC wires (CN2801 & CN2805).

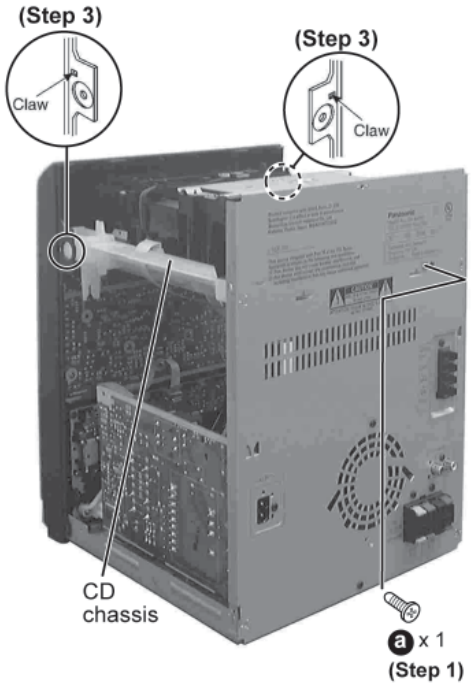

Step 3 Release the claws of both ends, and then lift up the CD Mechanism Unit.

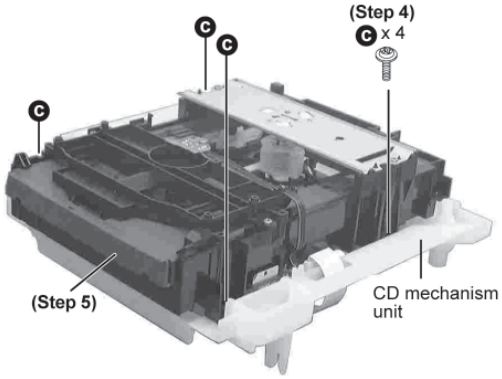

Step 4 Remove 4 screws.

Step 5 Remove the CD chassis.

Step 6 Lay the CD mechanism unit as shown.

• For disassembly of CD mechanism unit, please refer to Section 10.11 of this manual.

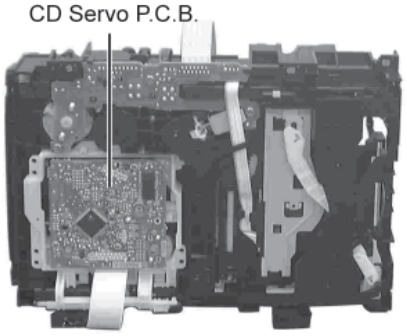

10.7 Disassembly of Main P.C.B.

- Follow the (Step 1) - (Step 2) of Item 10.3 - Disassembly of Top Cabinet
- Follow the (Step 1) - (Step 6) of Item 10.4 - Disassembly of CD Lid
- Follow the (Step 1) of Item 10.5 - Disassembly of the Rear Panel
- Follow the (Step 1) - (Step 3) of Item 10.6 - Disassembly of the CD Mechanism Unit

Step 1 Disconnect FFC wires CN2803 & CN2806 from Main P.C.B.

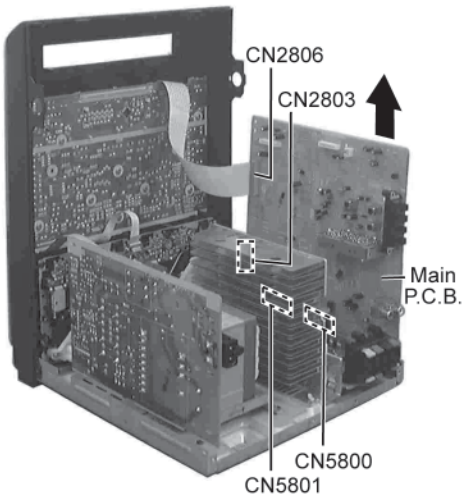

Step 2 Lift up Main P.C.B. by disconnecting connectors CN5800 & CN5801 as arrow shown above.

10.8 Disassembly of Sub-Power P.C.B.

- Follow the (Step 1) - (Step 2) of Item 10.3 - Disassembly of Top Cabinet
- Follow the (Step 1) - (Step 6) of Item 10.4 - Disassembly of CD Lid
- Follow the (Step 1) of Item 10.5 - Disassembly of Rear Panel
- Follow the (Step 1) - (Step 3) of Item 10.6 - Disassembly of CD Mechanism Unit
- Follow the (Step 1) - (Step 2) of Item 10.7 - Disassembly of Main P.C.B.

Step 1 Remove the 2 screws fixed at Sub Power P.C.B..
Step 2 Remove 2 screws at Power Amplifier IC.
Step 3 Disconnect connector CN5803
Step 4 Lift up the Sub Power P.C.B. to remove it.

- Replacement of Power Amplifier IC

Step 1 Desolder the terminals of Power Amplifier IC and replace the component.

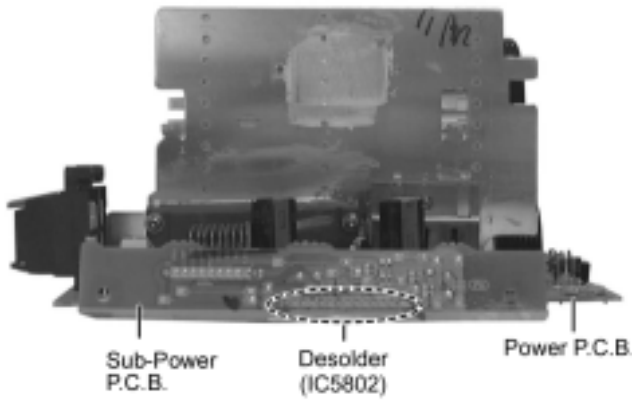

10.9 Disassembly of Power P.C.B.

- Follow the (Step 1) - (Step 2) of Item 10.3 - Disassembly of Top Cabinet
- Follow the (Step 1) - (Step 6) of Item 10.4 - Disassembly of CD Lid
- Follow the (Step 1) of Item 10.5 - Disassembly of the Rear Panel
- Follow the (Step 1) - (Step 3) of Item 10.6 - Disassembly of the CD Mechanism Unit
- Follow the (Step 1) - (Step 2) of Item 10.7 - Disassembly of the Main P.C.B.

Step 1 Remove the 2 screws fixed at heat sink and 1 screw fixed at Power P.C.B..

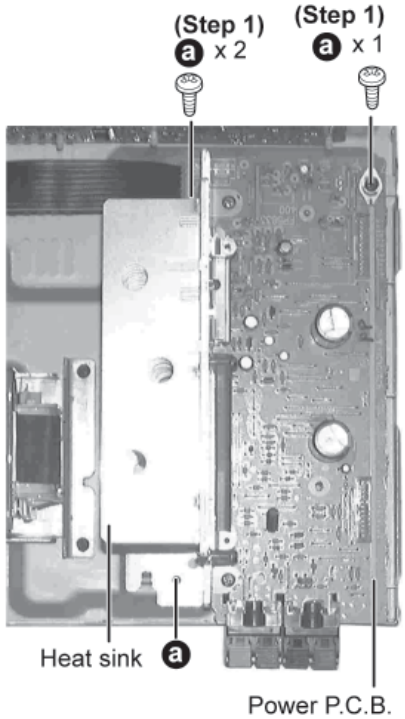

Note:
Insulate the Power P.C.B. with insulation material to avoid short circuit.

- **Replacement of the Power Amplifier IC/ Voltage Regulator**

Step 1 Remove 2 screws fixed to the Power Amplifier IC and 1 screw to Voltage Regulator.

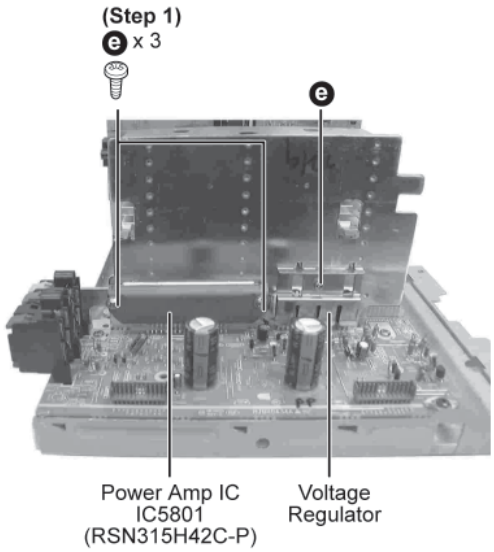

Step 2 Break the joint with a metal cutter as shown below.

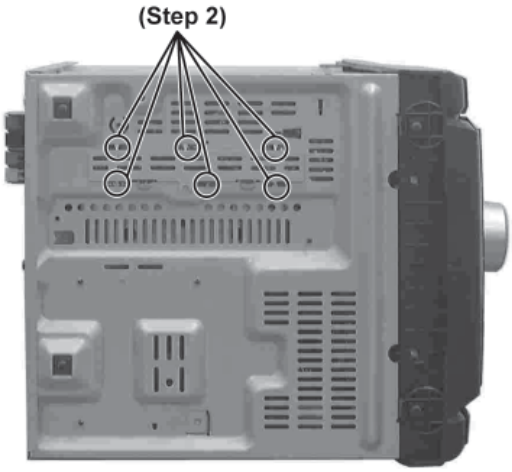

Step 3 Unsolder the terminals of Power Amp IC, transistor and replace the components.

Step 4 Fix back the cut portion with a screw as shown.

10.10 Disassembly of Transformer P.C.B.

- Follow the (Step 1) - (Step 2) of Item 10.3 - Disassembly of Top Cabinet
- Follow the (Step 1) - (Step 6) of Item 10.4 - Disassembly of CD Lid
- Follow the (Step 1) of Item 10.5 - Disassembly of the Rear Panel
- Follow the (Step 1) - (Step 3) of Item 10.6 - Disassembly of the CD Mechanism Unit

Step 1 Remove 3 screws, disconnect connector CN5950.

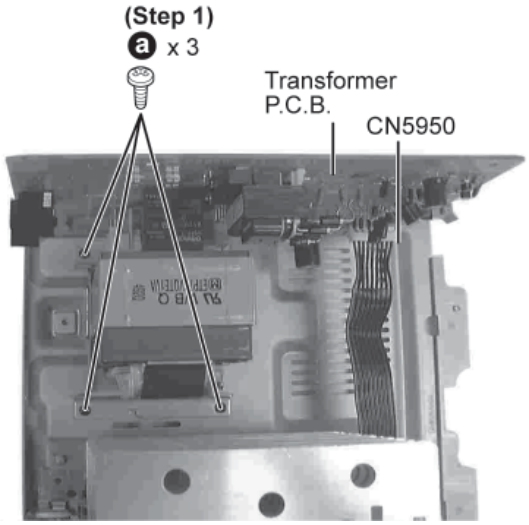

10.11 Disassembly of Front Panel Unit

- Follow the (Step 1) - (Step 2) of Item 10.3 - Disassembly of Top Cabinet
- Follow the (Step 1) - (Step 6) of Item 10.4 - Disassembly of CD Lid
- Follow the (Step 1) of Item 10.5 - Disassembly of the Rear Panel
- Follow the (Step 1) - (Step 3) of Item 10.6 - Disassembly of the CD Mechanism Unit

Step 1 Lay the unit as shown below.

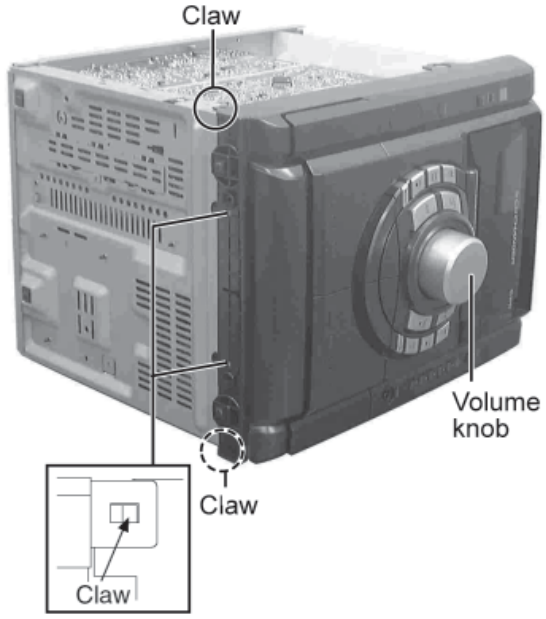

10.12 Disassembly of Deck Mechanism Unit

- Follow the (Step 1) - (Step 2) of Item 10.3 - Disassembly of Top Cabinet
- Follow the (Step 1) - (Step 6) of Item 10.4 - Disassembly of CD Lid
- Follow the (Step 1) of Item 10.5 - Disassembly of the Rear Panel
- Follow the (Step 1) - (Step 3) of Item 10.6 - Disassembly of the CD Mechanism Unit
- Follow the (Step 1) - (Step 3) of Item 10.10 - Disassembly of the Front Panel Unit

Step 1 Detach FFC wire (at CN971).

Step 2 Disconnect FFC flat cable from the connector (CN1001).

Step 3 Remove the 5 screws.

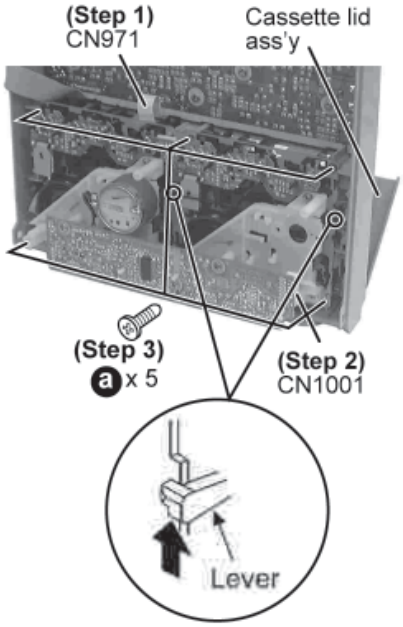

Step 2 Release 2 claws at bottom and 2 claws each side, draw the front panel ass'y forward.

Step 3 Remove volume knob.

- **Disassembly of Panel P.C.B.**

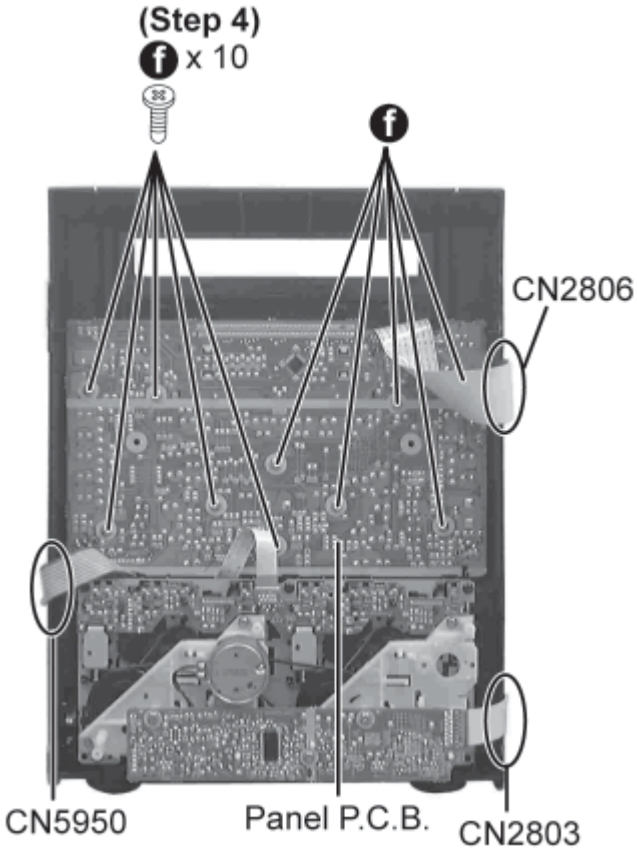

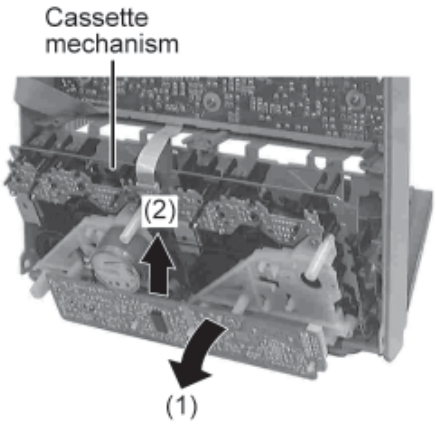

Step 4 Remove the 10 screws.
Step 5 Disconnect connectors CN2806, CN2803 and CN5950.

Step 4 Push the lever upward, and then open the cassette lid ass'y (For DECK1 and DECK2).

Step 5 Tilt the cassette mechanism unit in the direction of arrow (1), and then remove it in the direction of arrow (2).

- For replacement of Deck Mechanism P.C.B.

Step 6 Remove 3 screws.

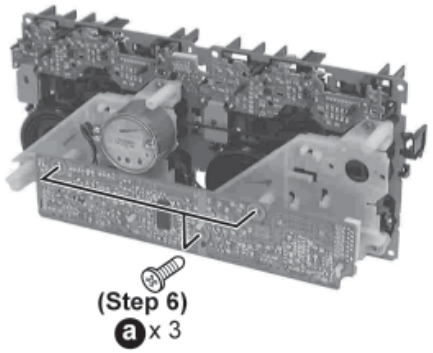

Step 7 Unsolder the motor terminals.

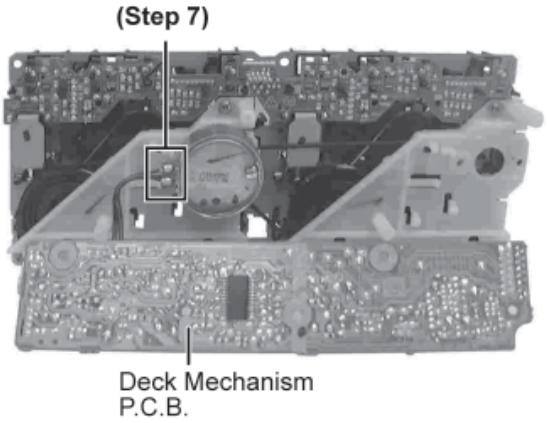

Step 8 Remove Deck Mechanism P.C.B.

10.13 CD Mechanism Main Component Replacement Procedures

- Follow the (Step 1) - (Step 2) of Item 10.3 - Disassembly of Top Cabinet
- Follow the (Step 1) - (Step 6) of Item 10.4 - Disassembly of CD Lid
- Follow the (Step 1) - (Step 6) of Item 10.6 - Disassembly of the CD Mechanism Unit

10.12.1 Replacement of the Traverse Deck

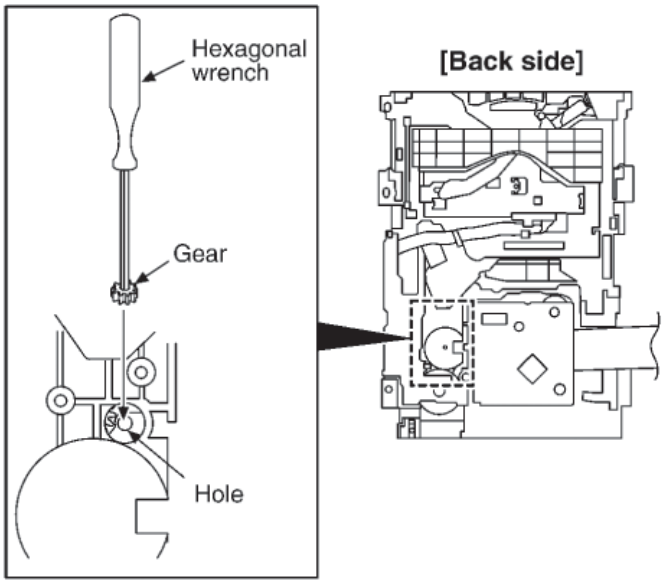

Step 2 Insert the gear with hexagonal wrench into the hole.

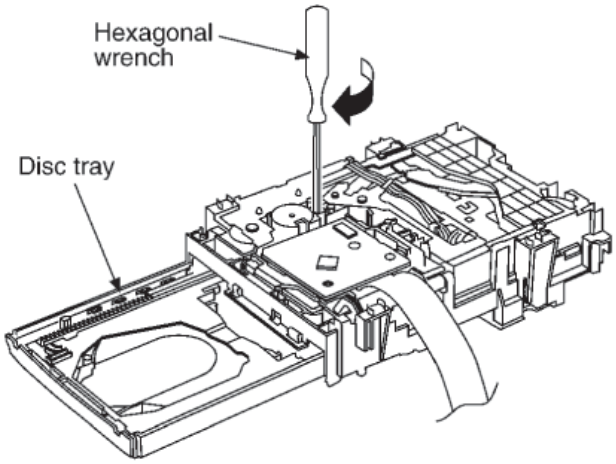

Step 3 Rotate the hexagonal wrench in the direction of arrow (clockwise), and then open the disc tray fully.

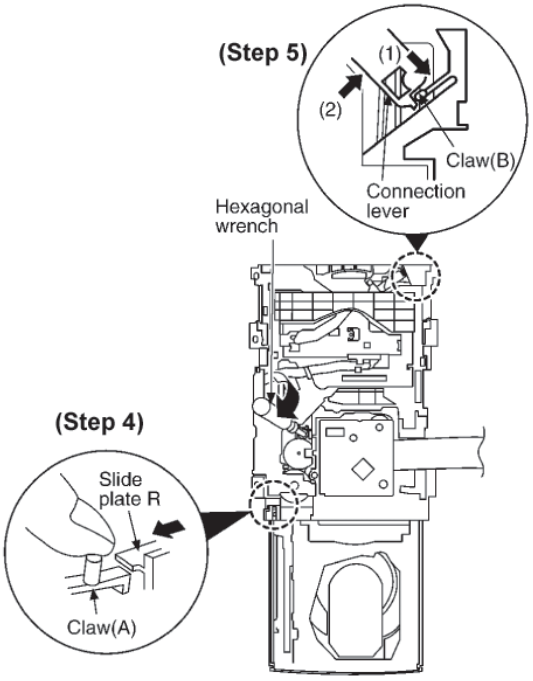

Step 4 With pressing the claw (A), rotate the hexagonal wrench clockwise. (The slide plate R moves for a little amount.)

Step 5 Pressing the claw (B) in the direction of arrow (1), the connection lever moves in the direction of arrow (2).

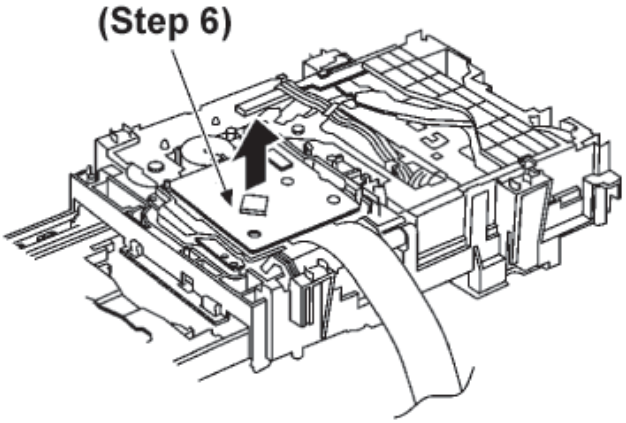

Step 6 Lift up the traverse deck ass'y.

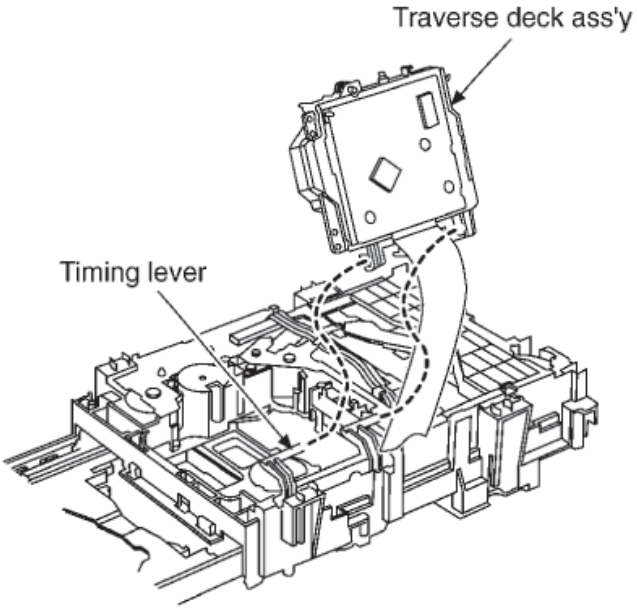

Step 7 Remove the traverse deck ass'y from the timing lever.

Caution:
When removing or inserting the traverse deck avoid touching the OPU lens and pressing onto the turntable.

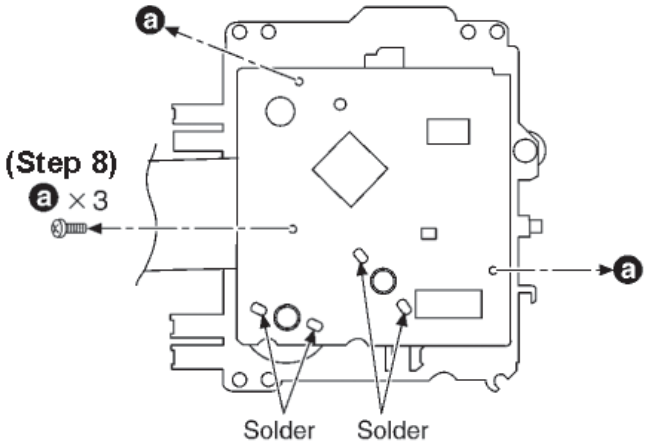

Step 8 Remove 3 screws.

Step 9 Unsolder the motor terminals (4 points).

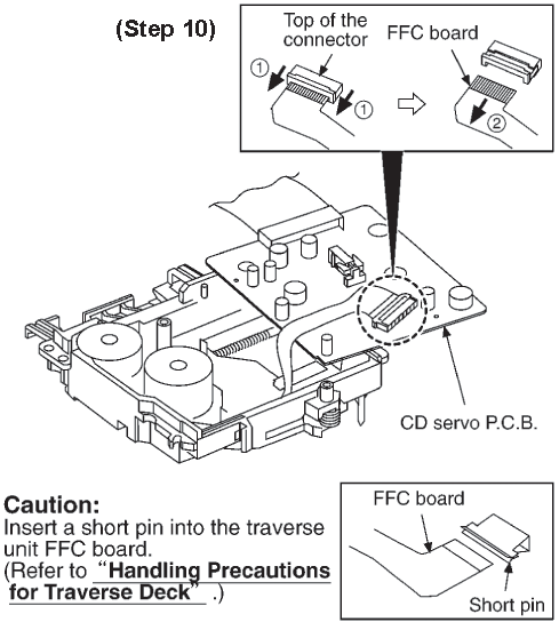

Caution:
Insert a short pin into the traverse unit FFC board.
(Refer to "**Handling Precautions for Traverse Deck**".)

Step 10 Remove the FFC board from the connector, and then remove the CD Servo P.C.B.

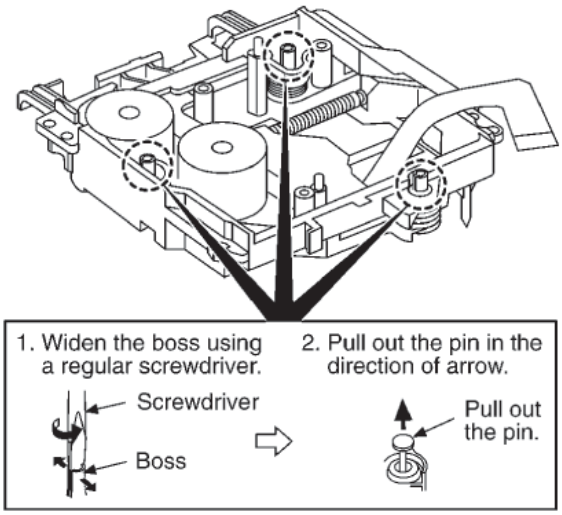

Step 11 Remove the pin.

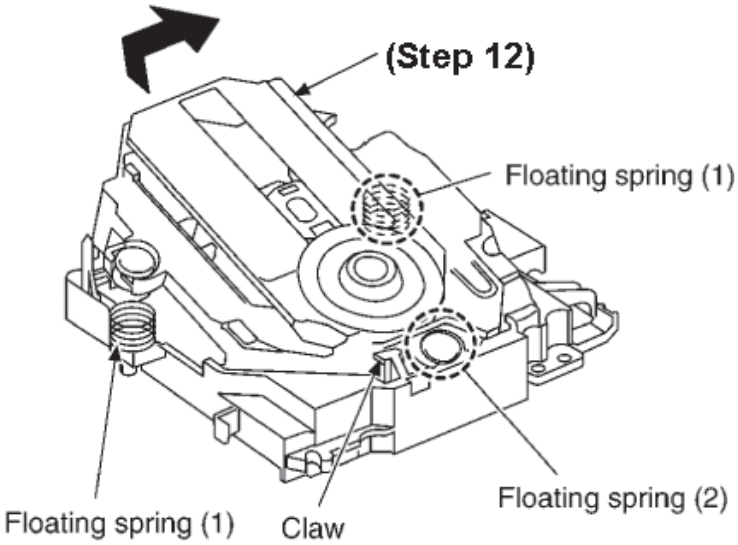

Step 12 Release the claw, and then remove the traverse deck ass'y.

Note:
Be careful not to lose the 3 floating spring because those will also be removed on removal of the traverse deck ass'y.

- **Installation of the CD Servo P.C.B. after replacement**

Step 1 Connect the FFC board.

Step 2 Install the CD servo P.C.B. in the traverse deck ass'y.

Step 3 Remove 3 screws.

Step 4 Solder.

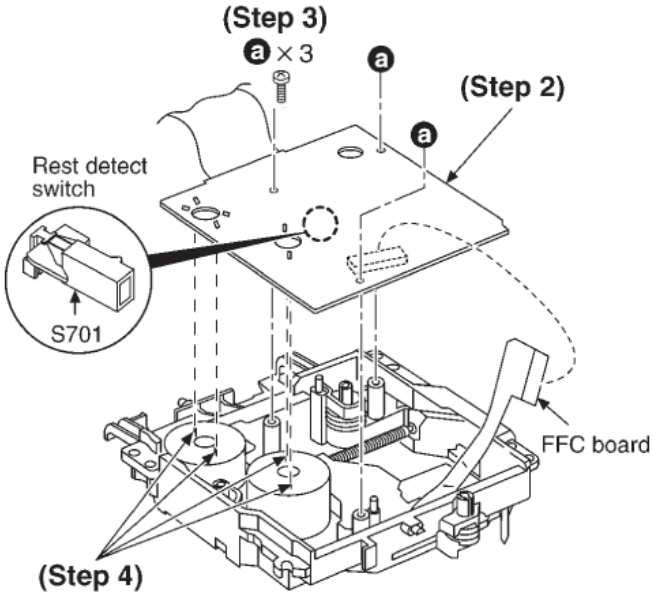

Note for installation of the CD servo P.C.B.

Before installing the CD servo P.C.B., move the optical pickup toward the outer edge from the mark "◀".
[Otherwise, the rest detect switch (S701) mounted on the CD servo P.C.B. may be damaged.]

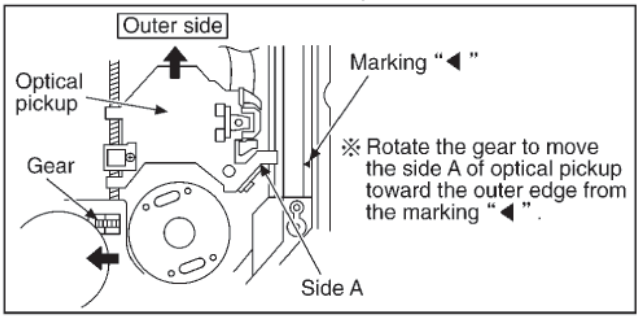

Installation for traverse deck ass'y

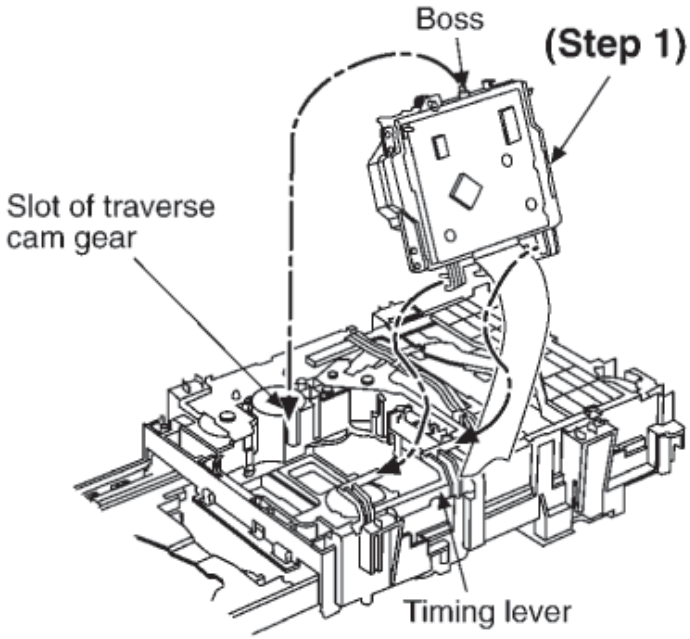

Step 1 Install the traverse deck ass'y to the timing lever.

Step 2 Align the boss of traverse deck ass'y with the slot of traverse cam gear.

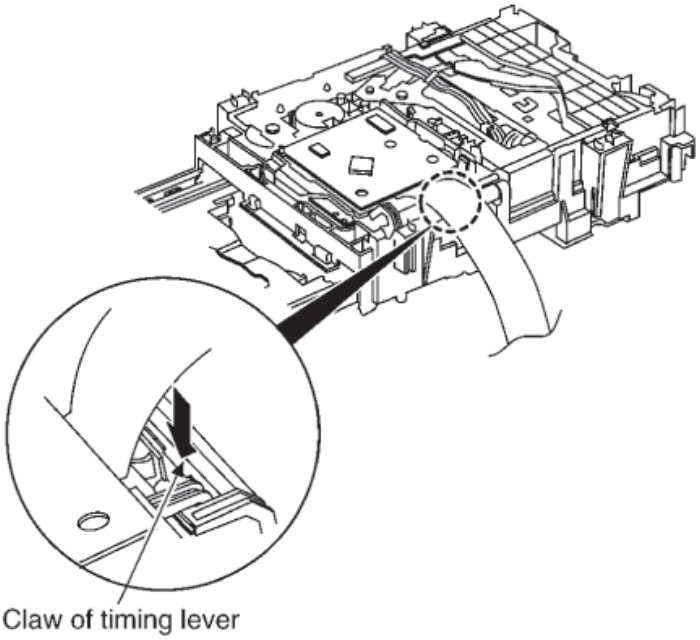

Step 3 Force the claw of timing lever.

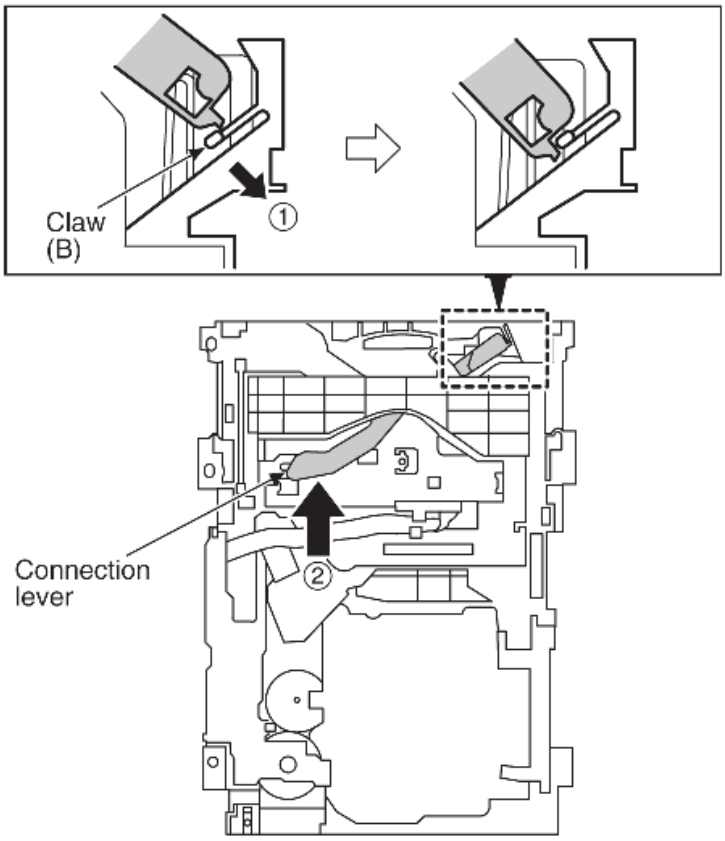

Step 5 With pressing the claw (B) in the direction of arrow (1), force the connection lever in the direction of arrow (2).

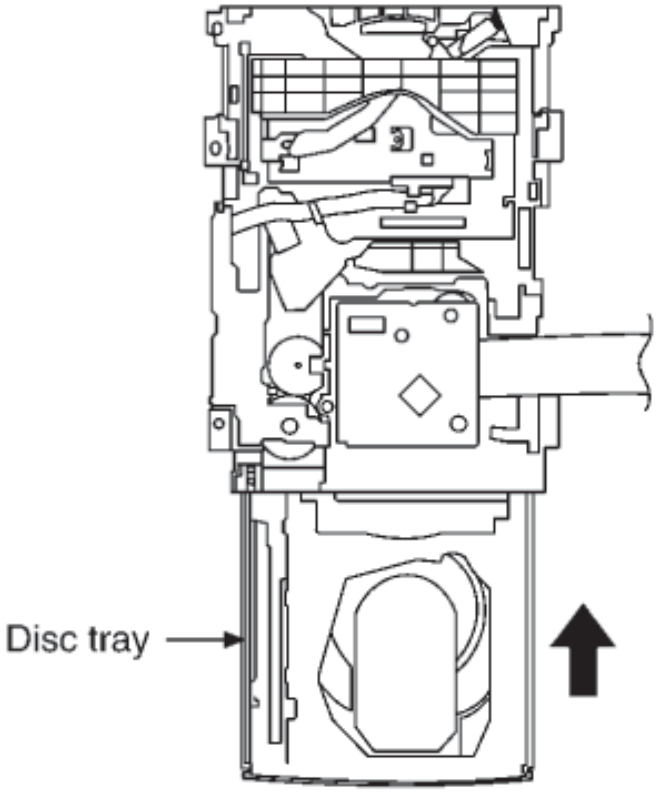

Step 4 Force the disc tray fully.

10.13.2 Replacement for the Disc Tray

Step 1 Remove 4 screws.

Step 2 Remove the upper plate.

Step 3 Remove 3 screws.

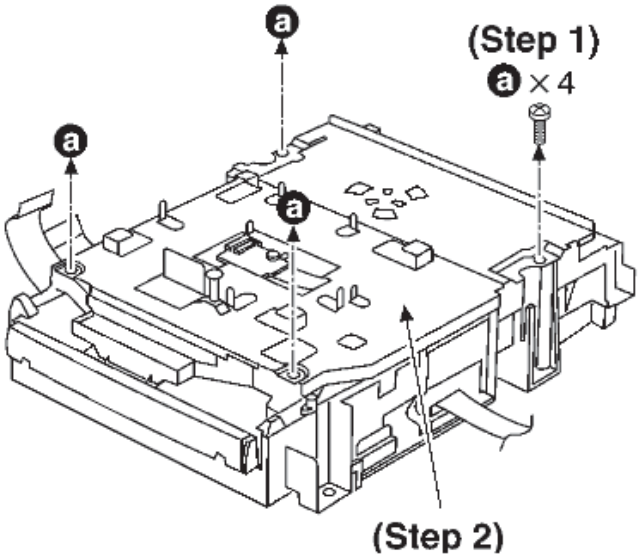

Step 4 With lifting the claw in the direction of (1), draw the CD Detect P.C.B. in the direction of arrow (2).

Step 5 Remove the mechanism cover.

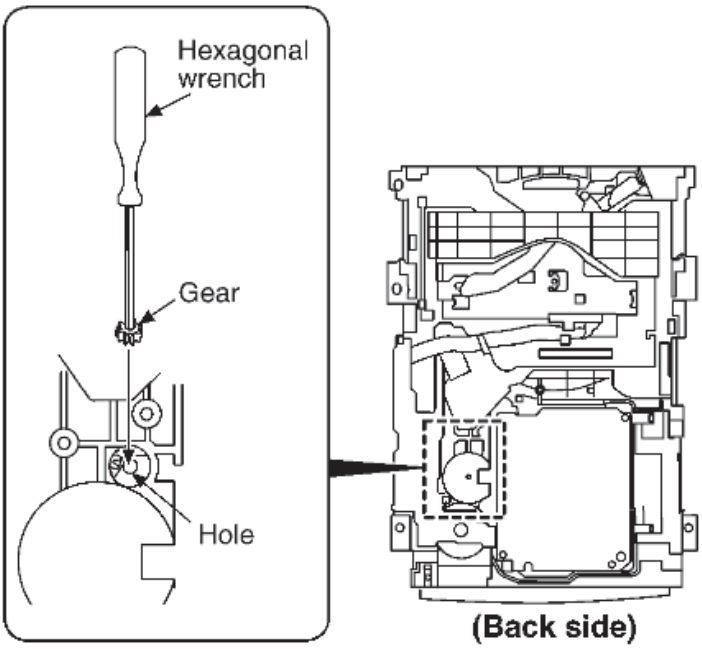

Step 6 Insert the gear with hexagonal wrench into the hole.

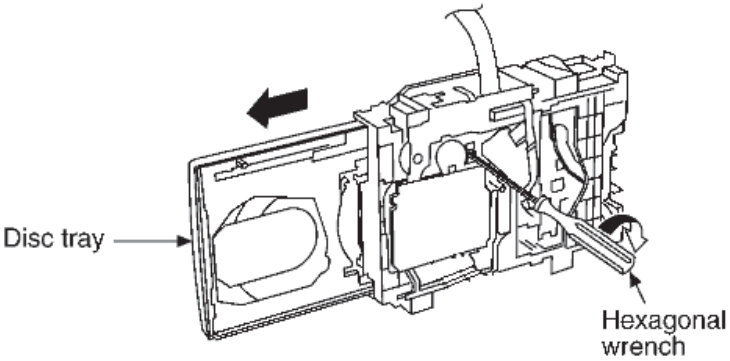

Step 7 Rotate the hexagonal wrench in the direction of arrow, and then open the disc tray fully.

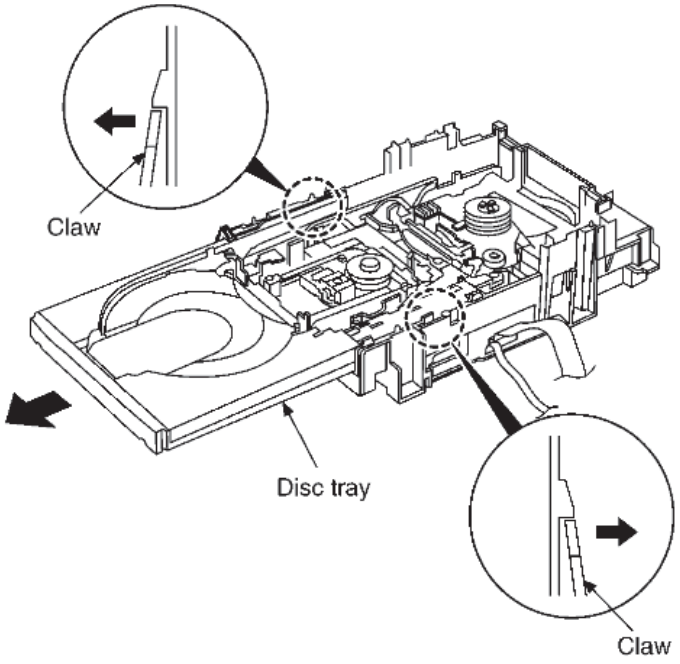

Step 8 Release the both claws, and then draw the disc tray.

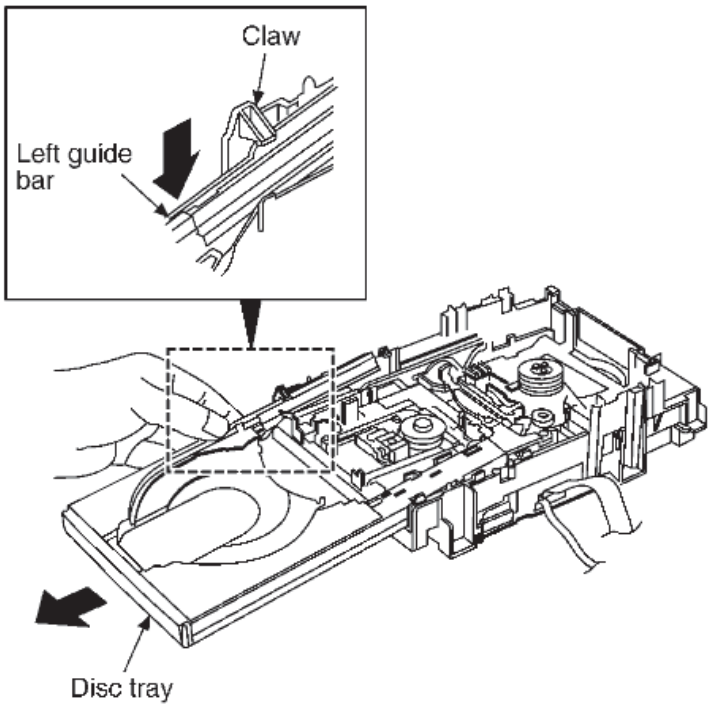

Step 9 With forcing the left guide bar manually because the left guide bar interfers with claw, draw the disc tray.

[Installation of the disc tray after replacement]

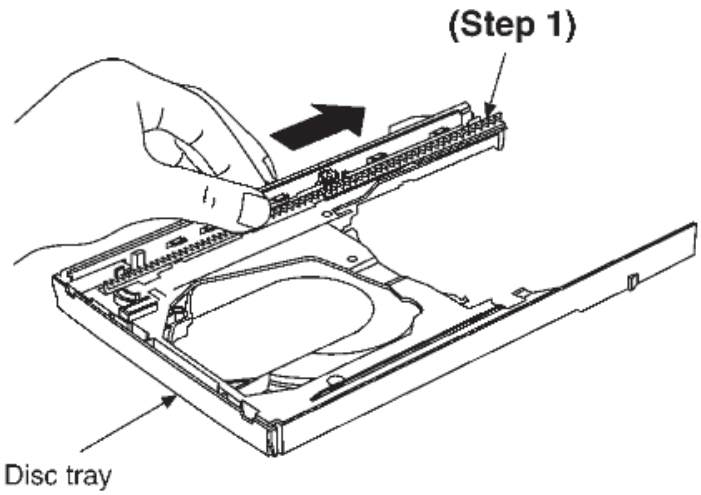

Step 1 Slide the drive rack fully in the direction of arrow.

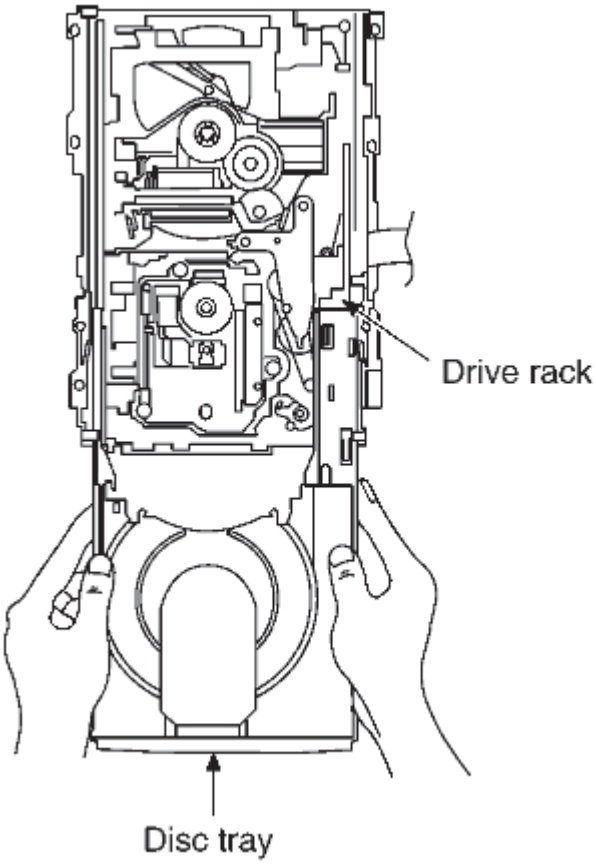

Step 2 Holding the drive rack not to move, install the disc tray.

Step 3 Align the drive rack with the drive gear.

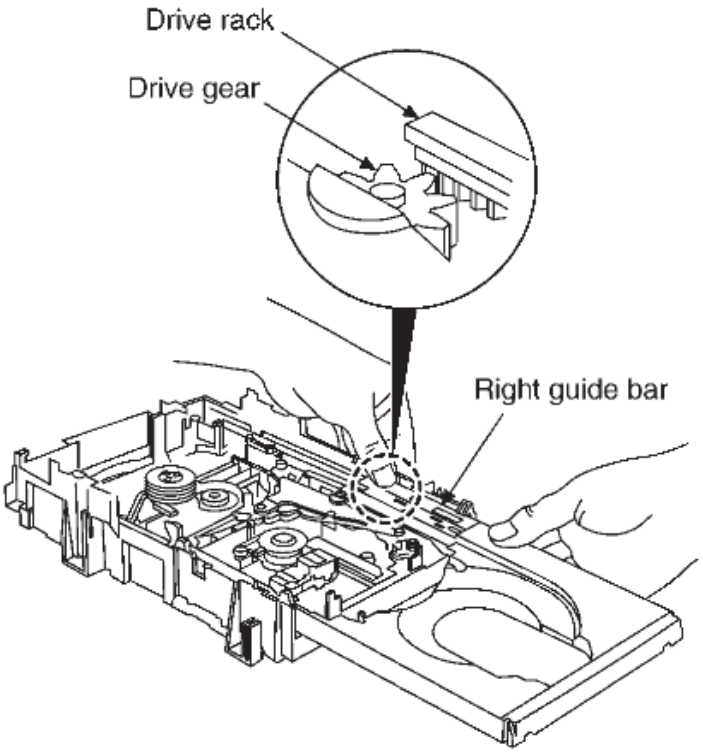

NOTE:
Force the right guide bar of tray base manually not to move upwards.

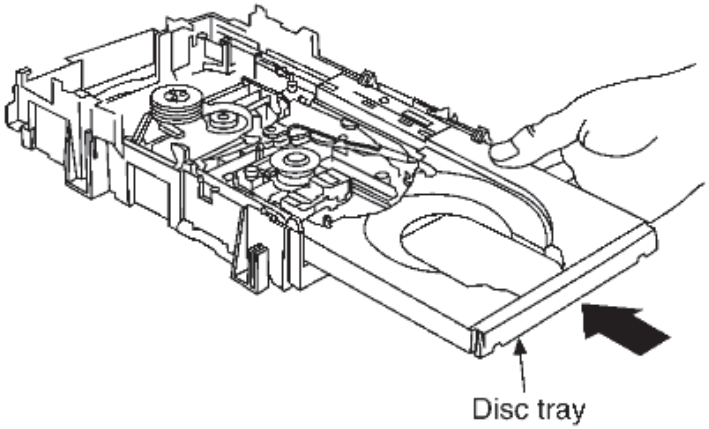

Step 4 Holding the disc tray manually, push the disc tray in the direction of the arrow.

10.13.3 Disassembly and reassembly for mechanism base drive unit

Step 1 Remove 3 screws.

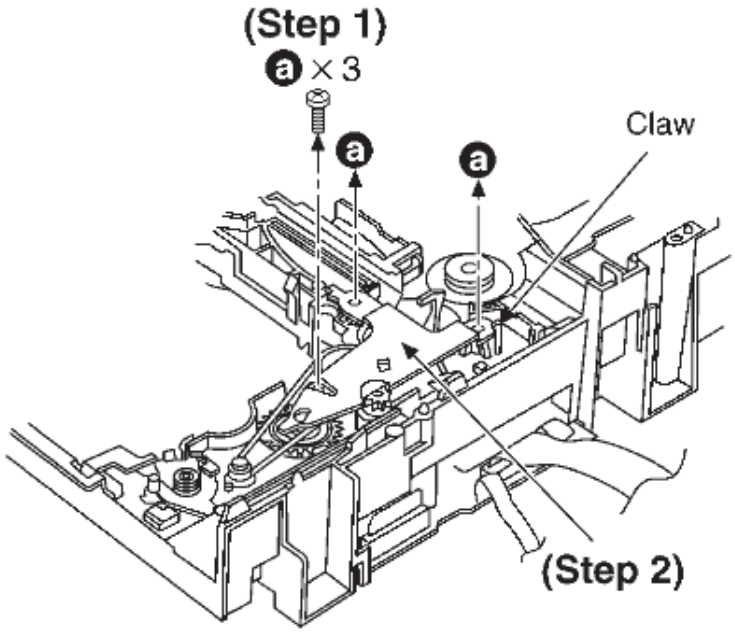

Step 2 Release the claw, and then remove the gear holder.

Step 3 Remove the belt and change gear spring.

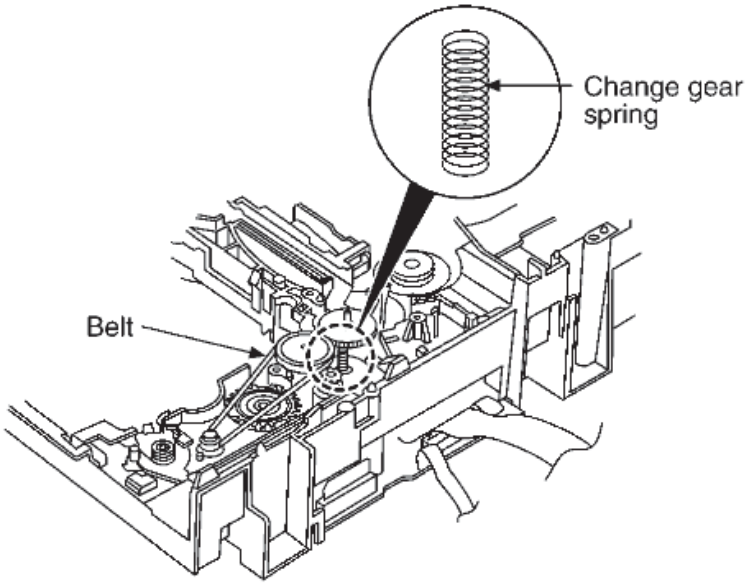

NOTE:
Take care not to lose the change gear spring.

Step 4 Remove the pulley gear, change gear and UP/DOWN gear.

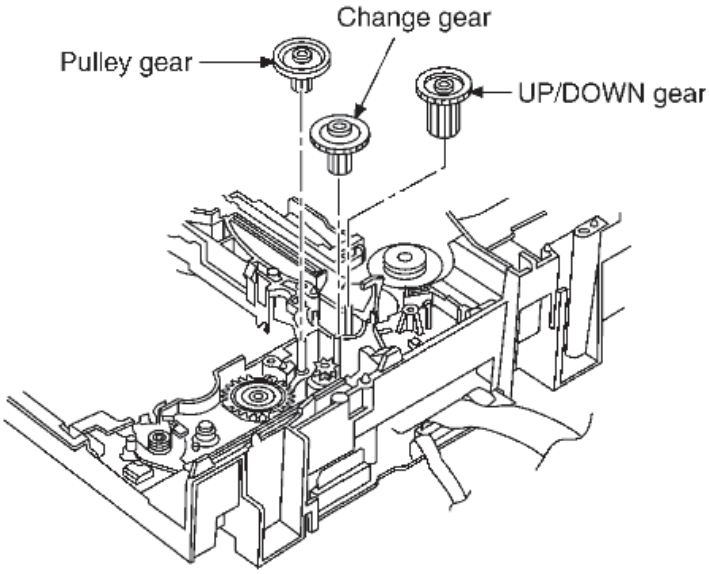

Step 5 Release the 2 claws, and then remove the bottom SW P.C.B..

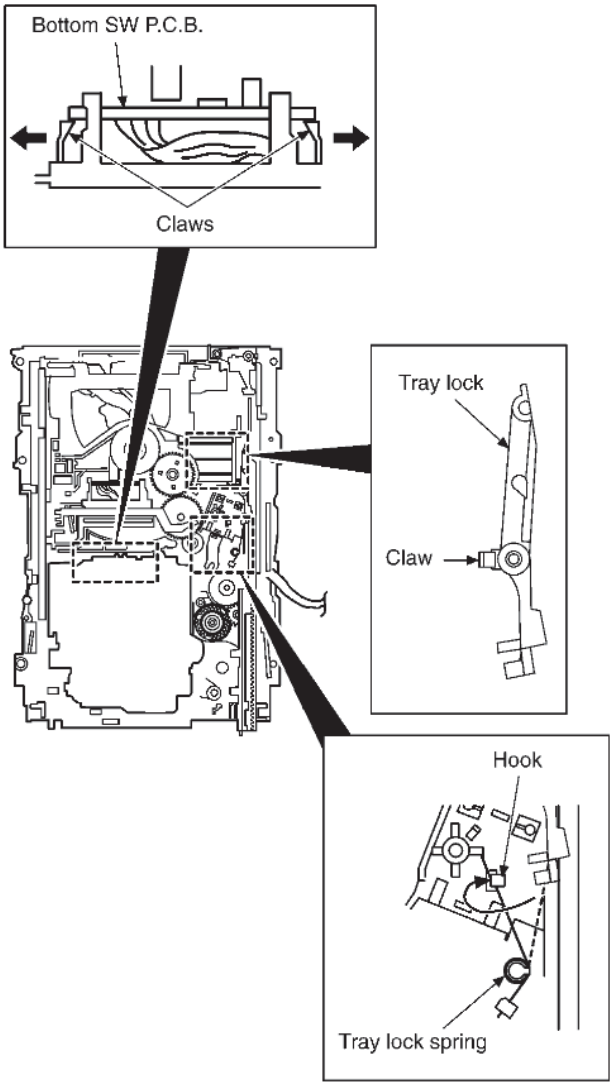

Step 6 Install the tray lock spring to hook temporary.

Step 7 Release the claw, and then remove the tray lock.

Step 8 Release the claw, and then remove the rear lock.

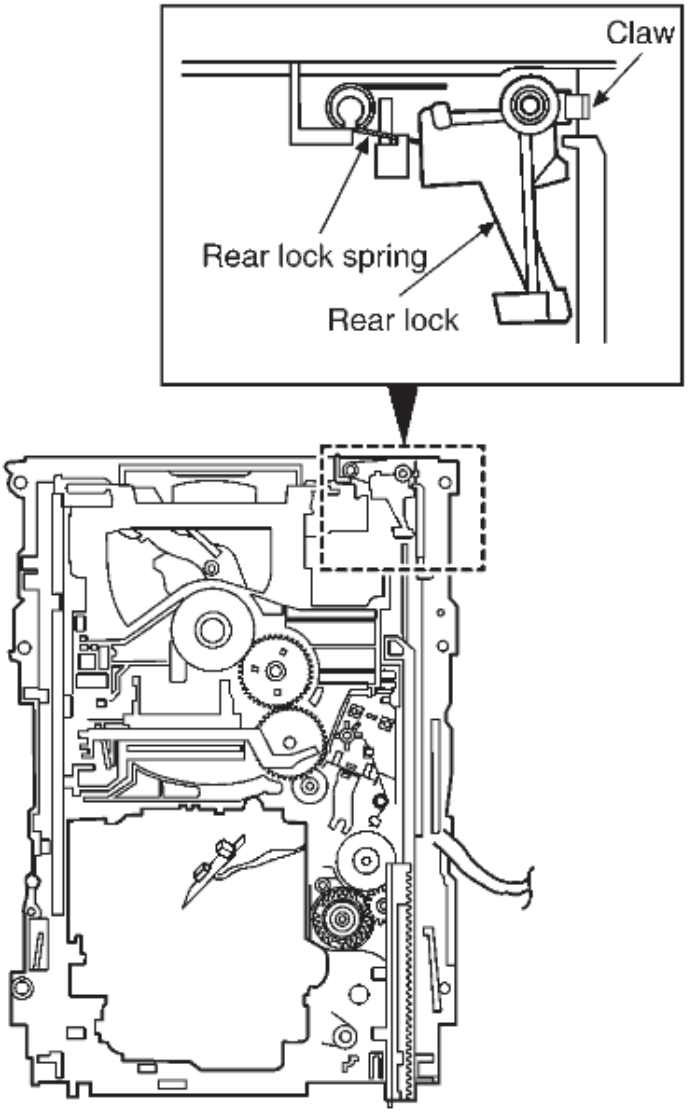

Step 9 Pressing the claw (B) in the direction of arrow (1), force the connection lever in the direction of arrow (2).

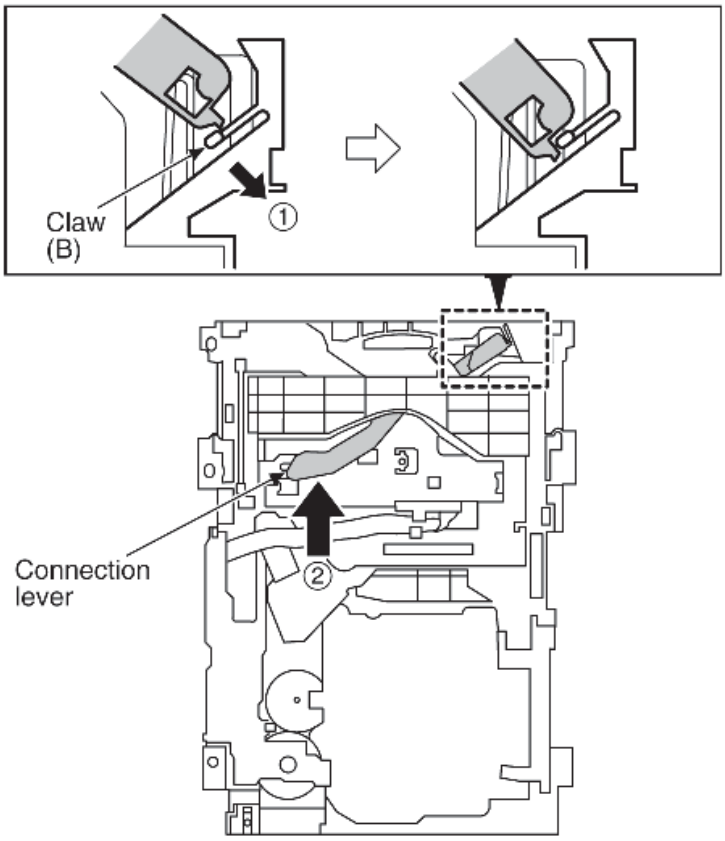

Step 10 Move the slide plate 1 to the end of stock side.

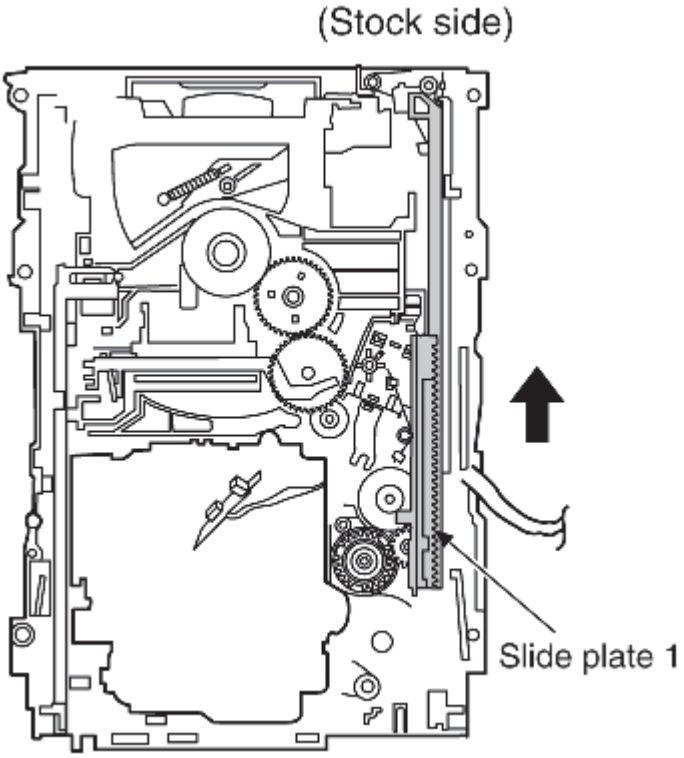

Step 11 Lift up the left end of spindle base unit in the direction of arrow (1), and then remove the unit in the direction of arrow (2).

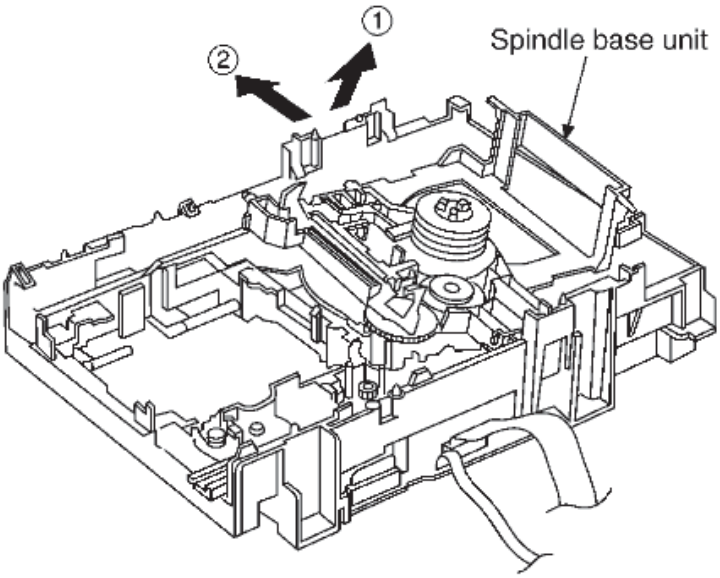

Step 12 Remove slide plate 1 and slide plate 2.

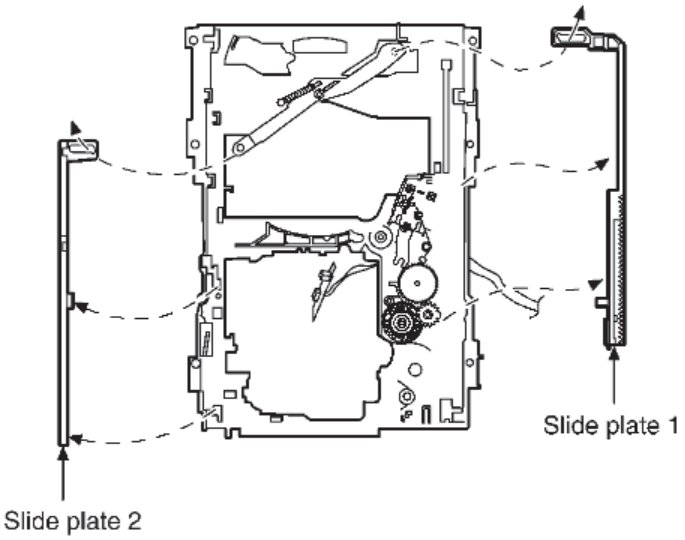

Step 13 Remove the traverse relay gear, traverse cam gear and drive gear.

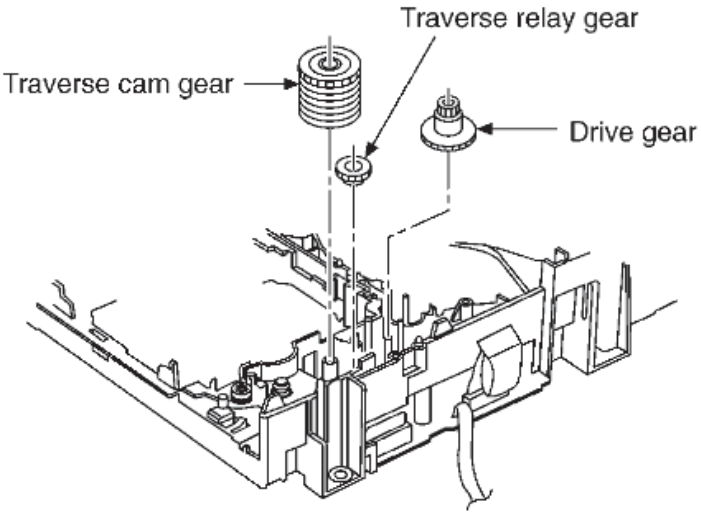

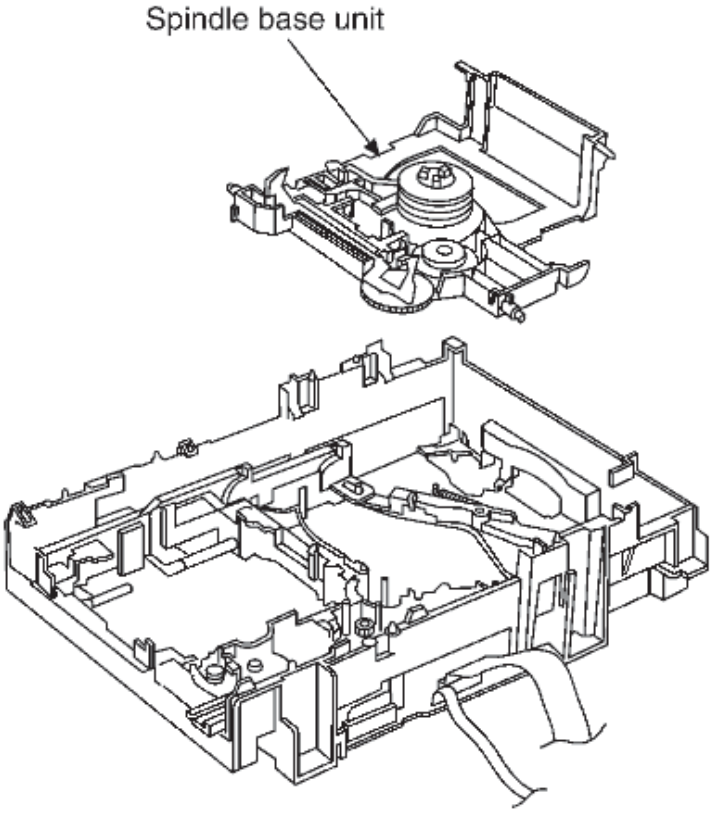

[Dissassembly/reassembly for the spindle base unit]

Step 1 Draw the 5 disc spacers.

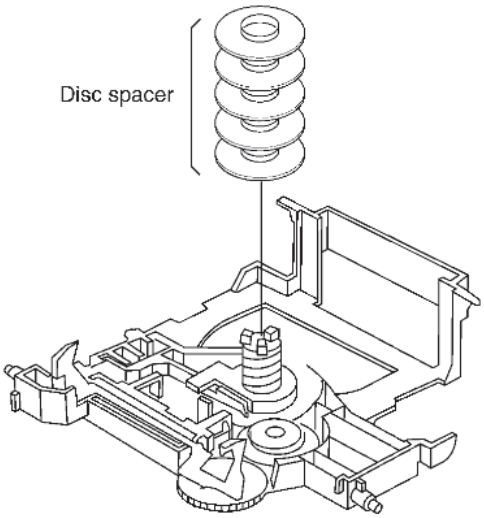

Step 2 Pushing the claw, slide the support plate in the direction of arrow, and then remove it.

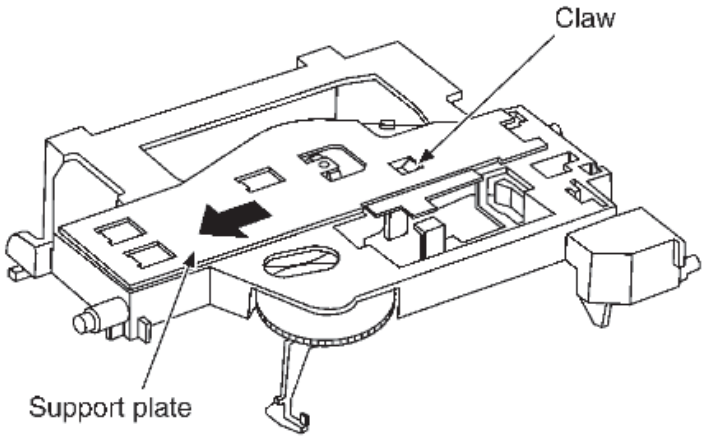

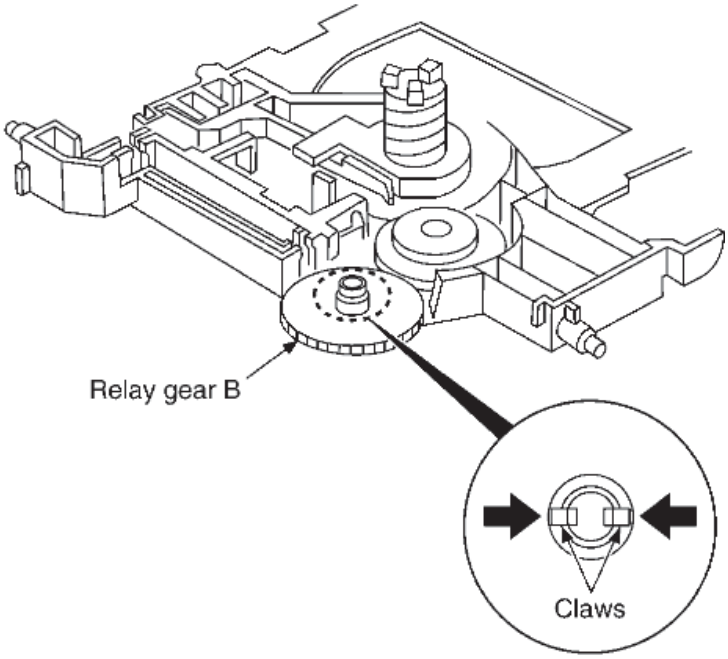

Step 3 Rotate the disc lever in the direction of arrow (1), draw the disc lever.

Step 4 Release the 2 claws, and then draw the relay gear B.

Step 5 Release the 2 claws as shown below.

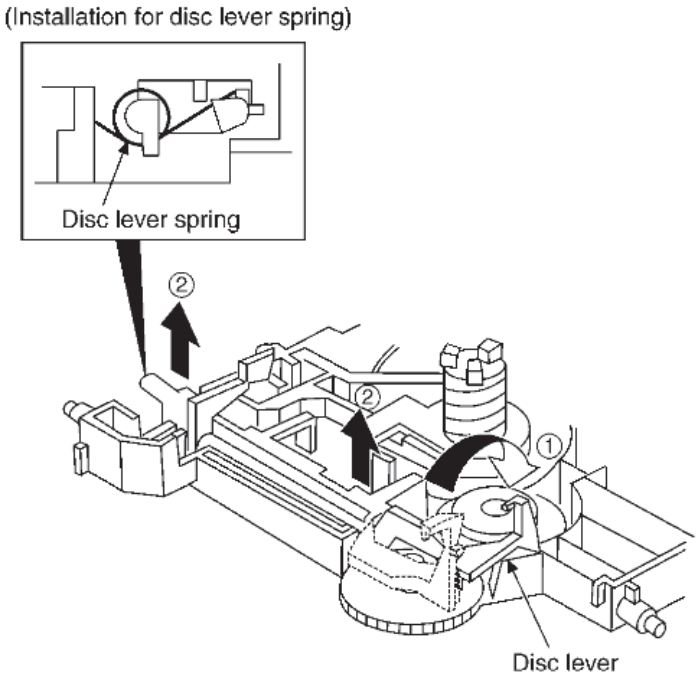

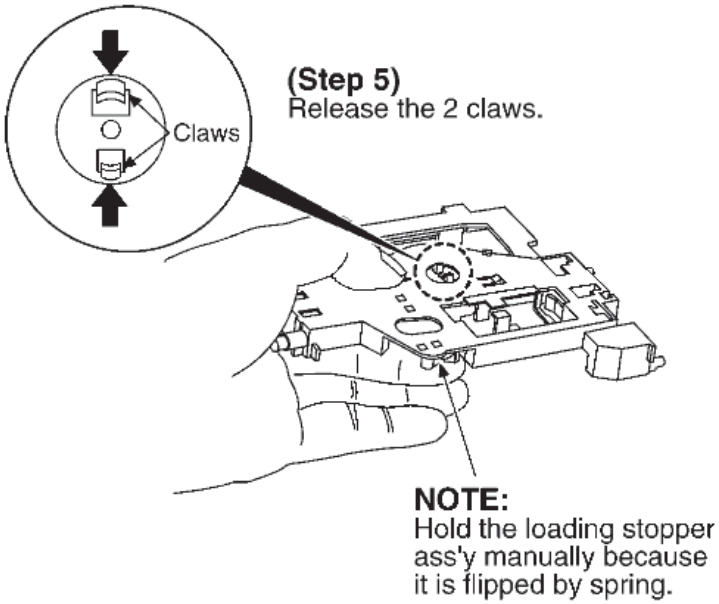

NOTE:
Take care not to lose the disc lever spring.

NOTE:
Hold the loading stopper ass'y manually bacause it is flipped by spring.

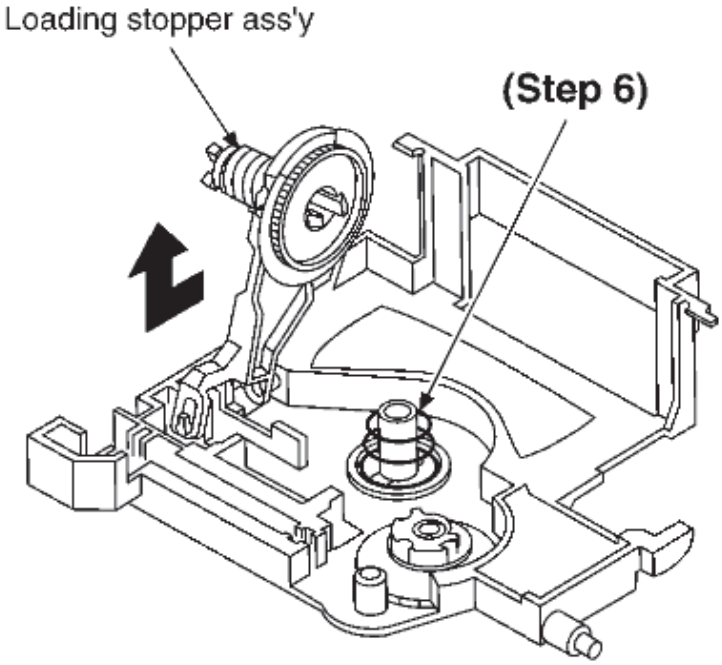

Step 6 Remove the cushion spring.

Step 7 Remove the loading stopper ass'y in the direction of arrow.

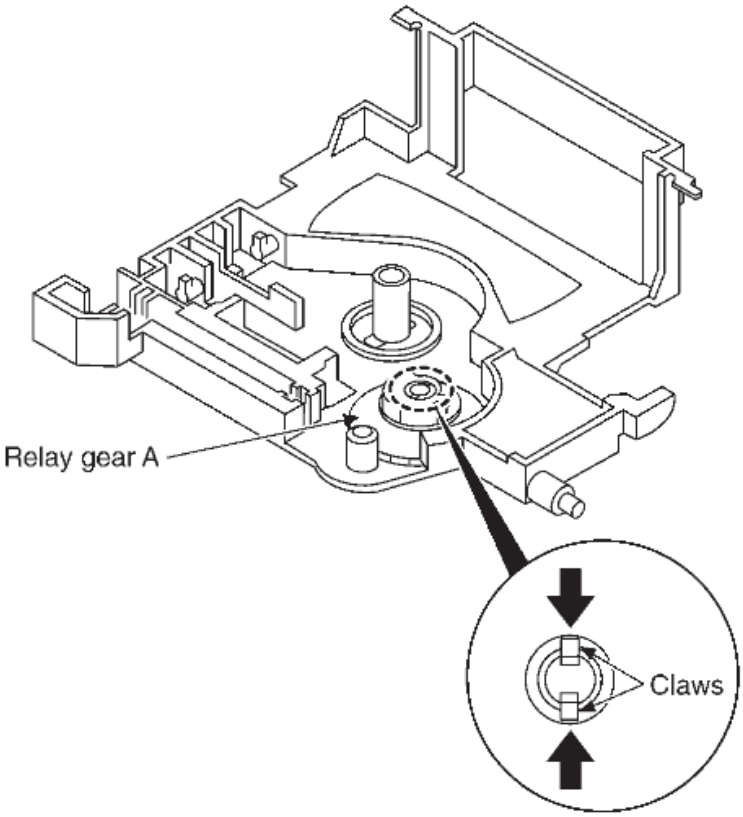

Step 8 Release the 2 claws, and then remove the relay gear A.

Step 9 Release the 2 claws, and then remove the spindle shaft.

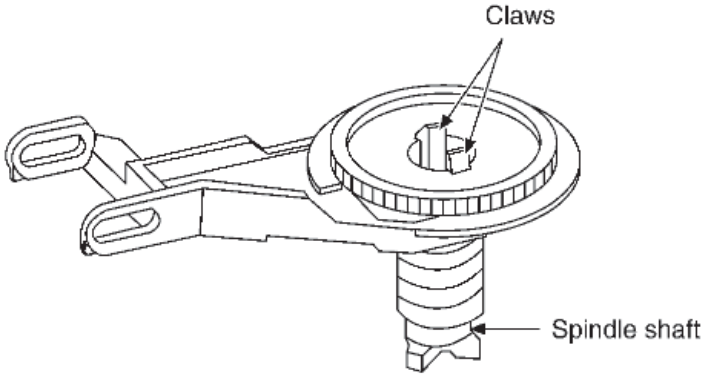

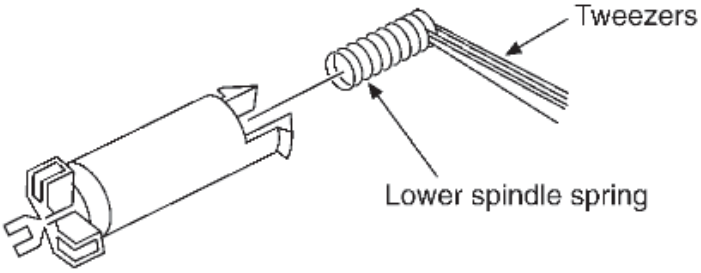

Step 10 Remove the lower spindle spring with tweezers.
Step 11 Force the lower hook with thin tip of minus screwdriver.

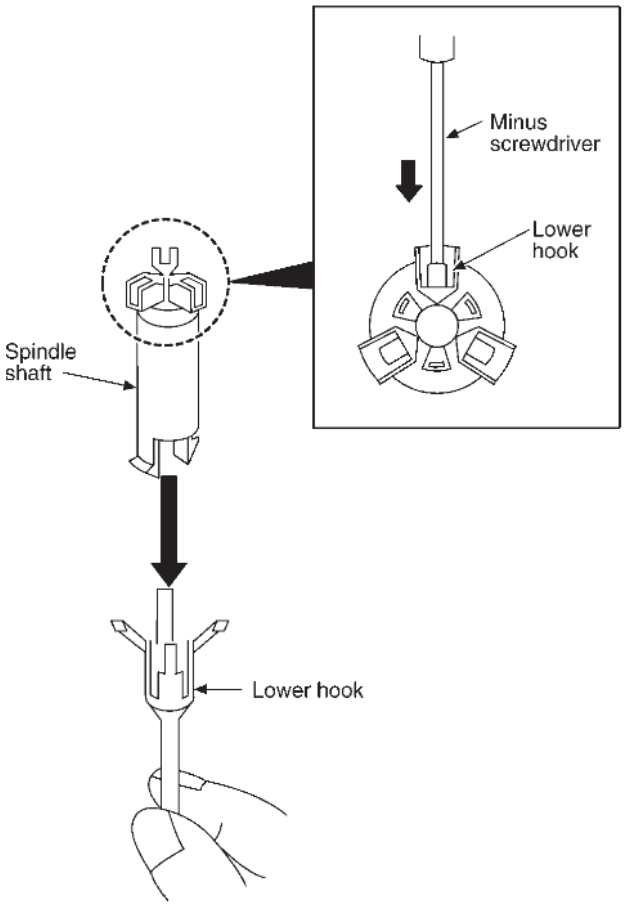

Step 12 Squeeze the shaft of lower hook, and then draw it.

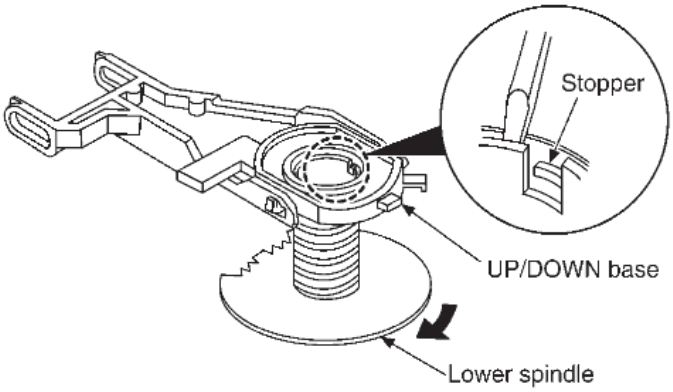

Step 13 Rotate the lower spindle in the direction of arrow until the lower spindle interferes with stopper.

Step 14 Insert the thin tip of minus screwdriver between the lower spindle and UP/DOWN base, and then slacken the lower spindle to release the stopper. Then, rotate the lower spindle and remove it.

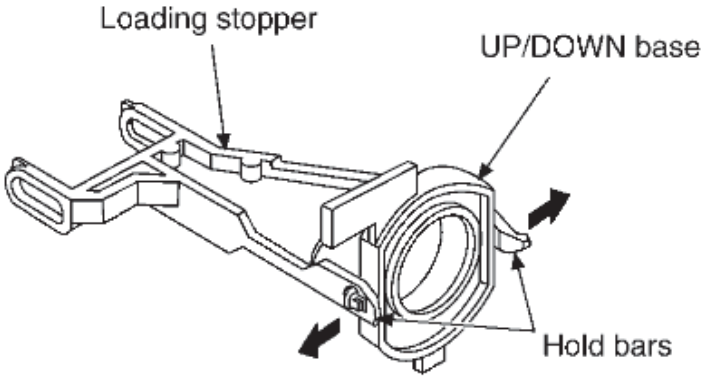

Step 15 Rotate the UP/DOWN base at a 90° angle. Then, spread the hold bars of loading stopper and remove the UP/DOWN base.

[Installation for loading stopper ass'y]

Step 1 Align the claw of loading stoppers ass'y with the slot of spindle base. (Caution should be exercised when alignment of claw due to the size of claws.)

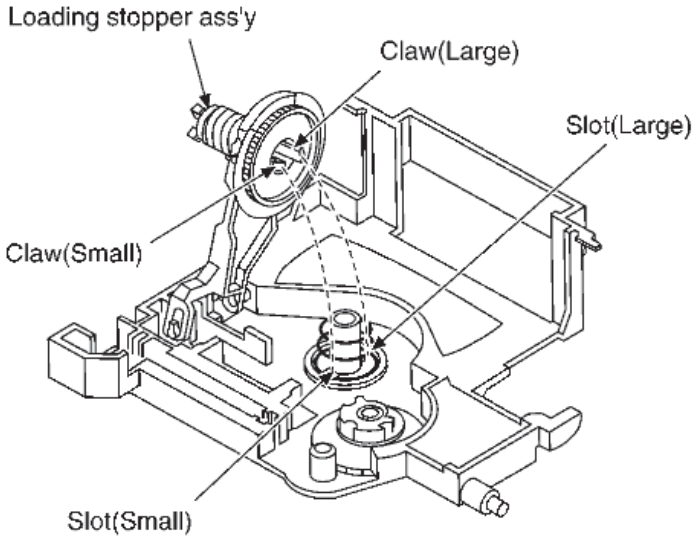

Step 2 Lower the loading stopper ass'y, and then align the lower spindle with the trapezoid tooth of relay gear A.

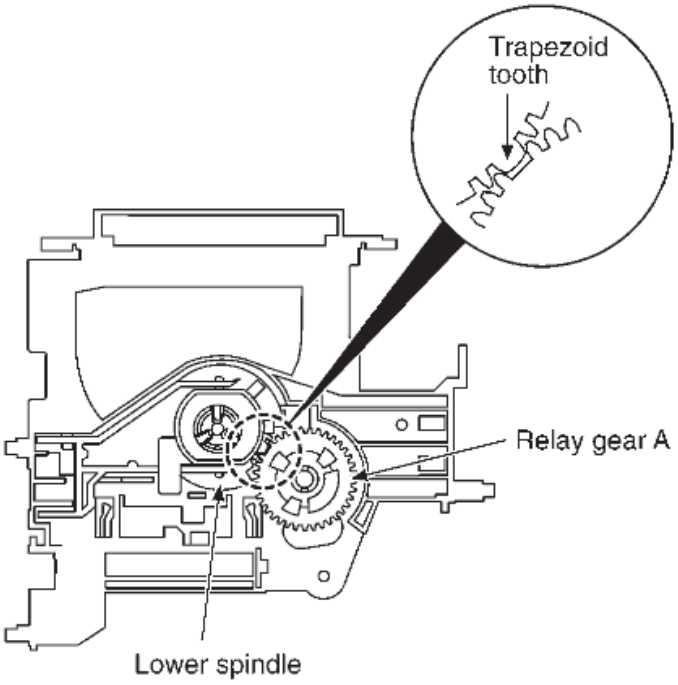

Step 3 Force the loading stopper ass'y, latch the claw firmly.

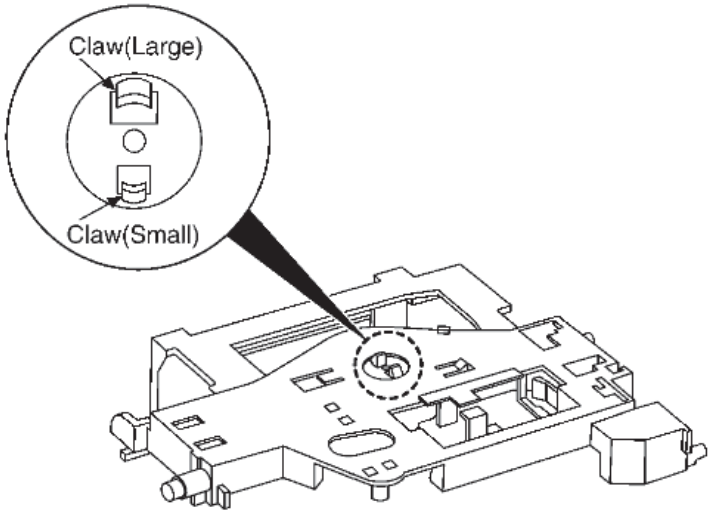

[Reassembly for mechanism base drive unit]

Step 1 Install the traverse cam gear.
Step 2 Rotate the traverse cam gear to the direction of arrow.

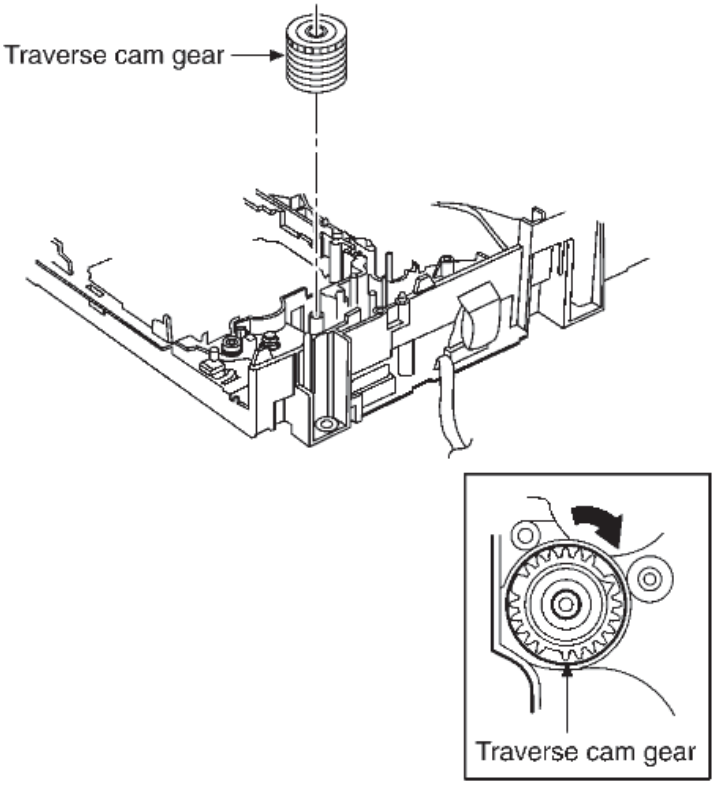

*When installing the traverse relay gear, align the trapezoid tooth of gear with tooth of traverse cam gear.

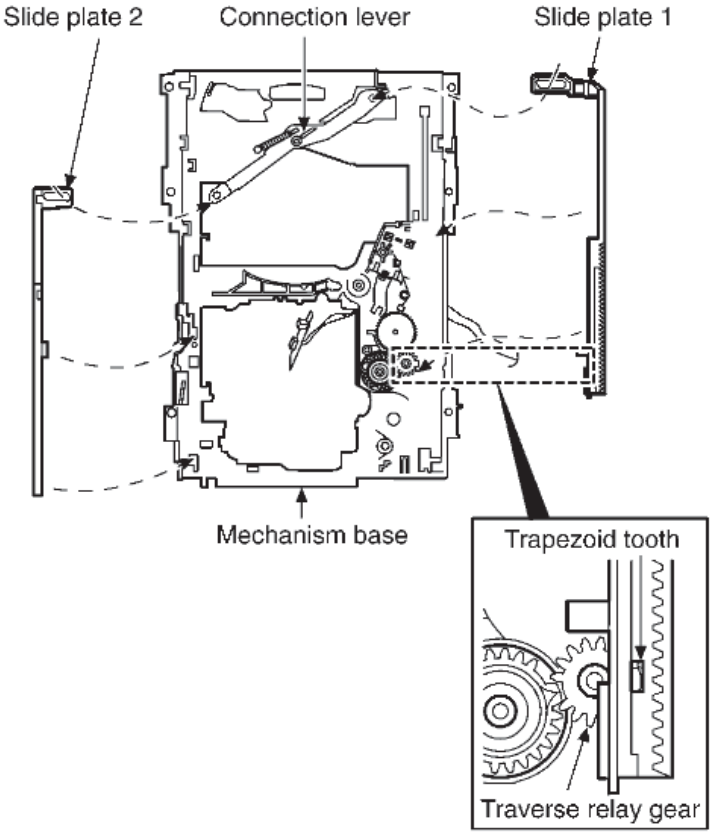

Step 3 Install the drive gear and traverse relay gear.

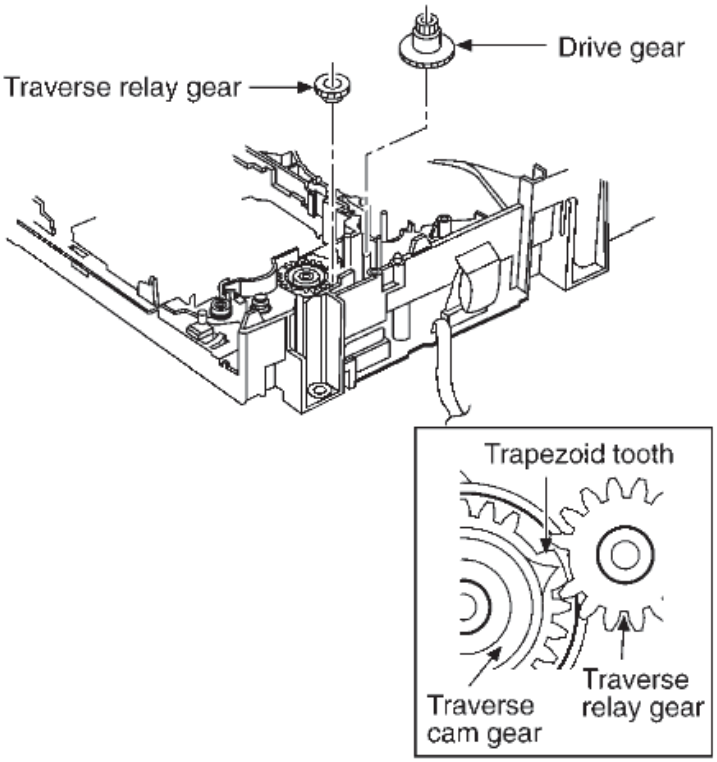

Step 4 Install the slide plate 2 to the mechanism base, and then match to the connection lever.

Step 5 Install the slide plate 1 to the mechanism base, and then match to the connection leve and align the trapezoid tooth of traverse relay gear with the slide plate 1.

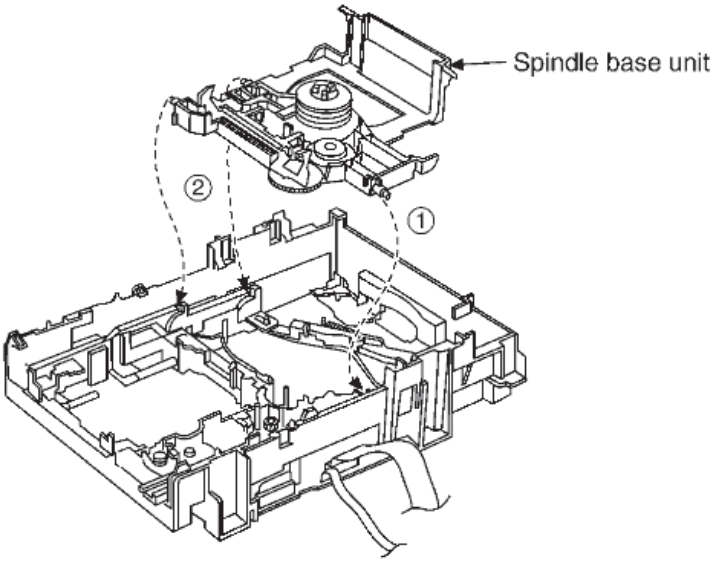

Step 6 Install the spindle base unit. (First, slide plate 1.)

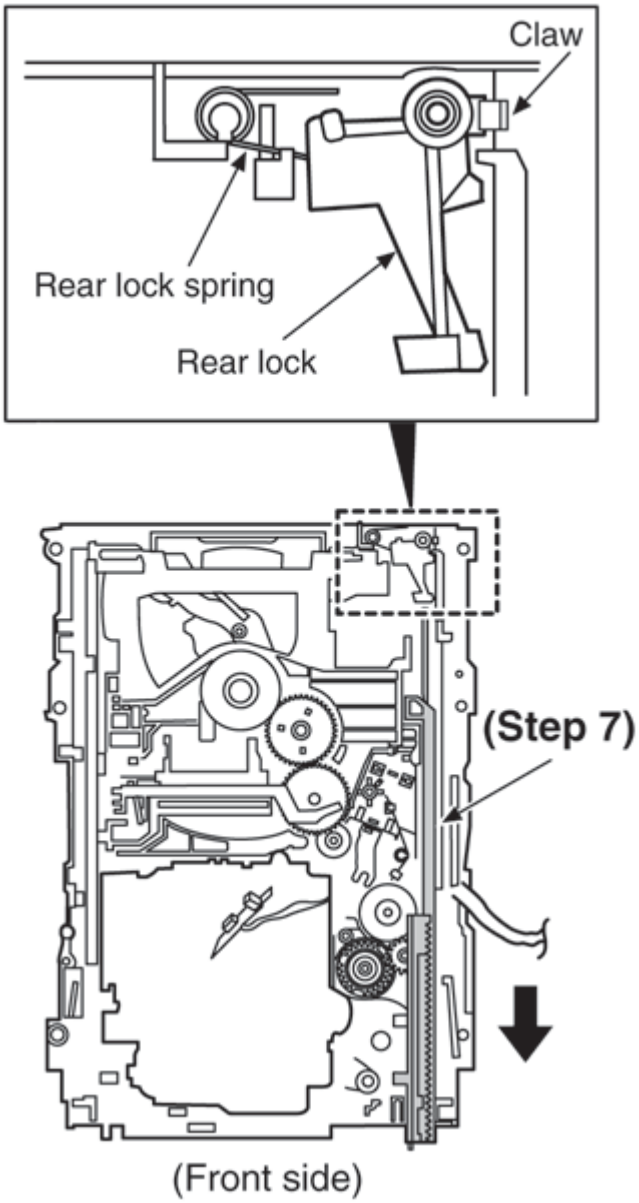

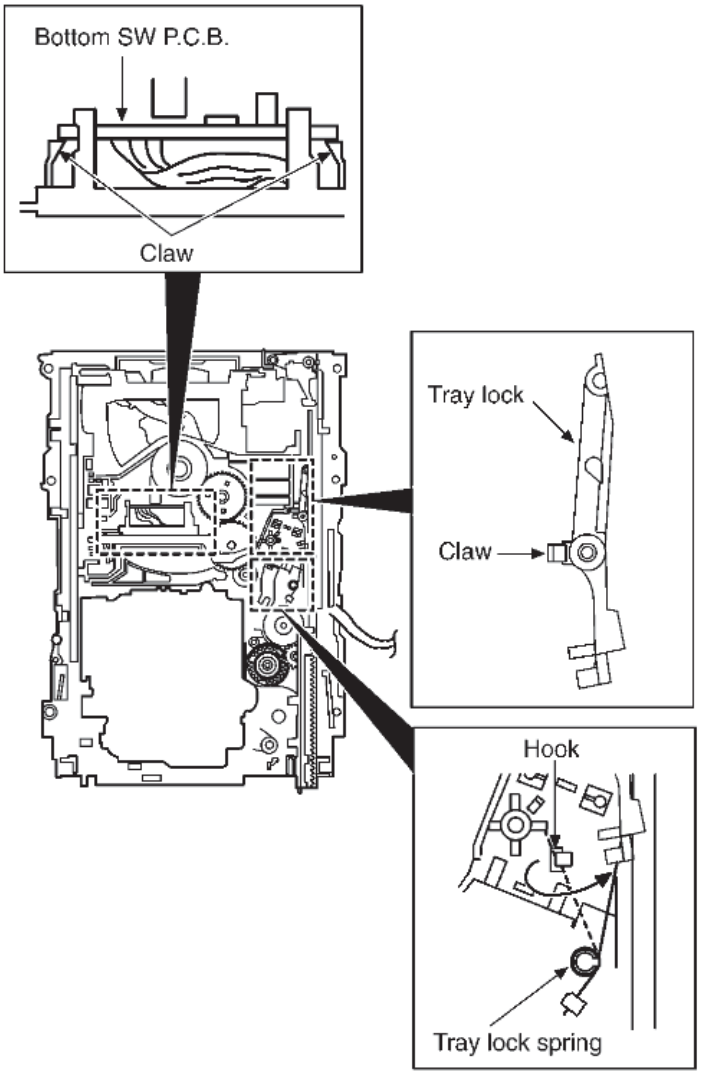

Step 11 Remove the tray lock spring from hook,and then latch to the tray lock.

Step 12 Install the UP/DOWN gear, change gear, change gear spring, pulley gear and belt in the order of (1) - (5).

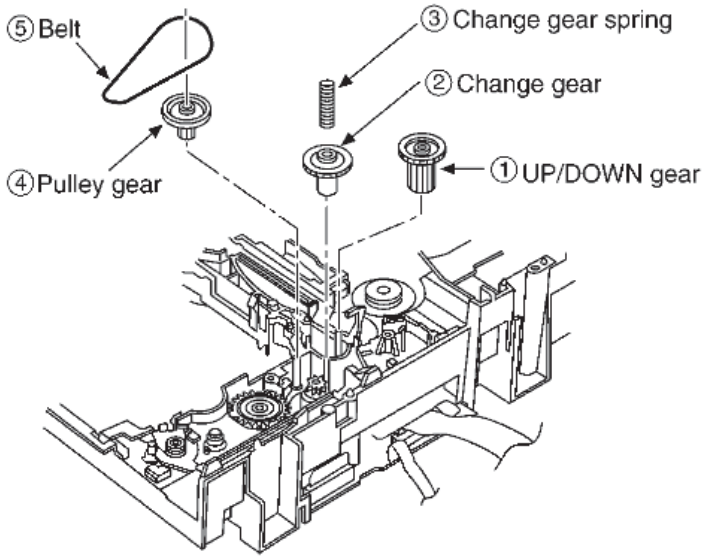

Step 7 Move the slide plate 1 to forward fully.

Step 8 Install the rear lock. (The claw should be latched.)

Step 9 Install the Spindle Position P.C.B.. (The claw should be latched.)

Step 10 Install the tray lock. (The claw should be latched.)

Step 13 Install the gear holder, and then tighten the screw (a).

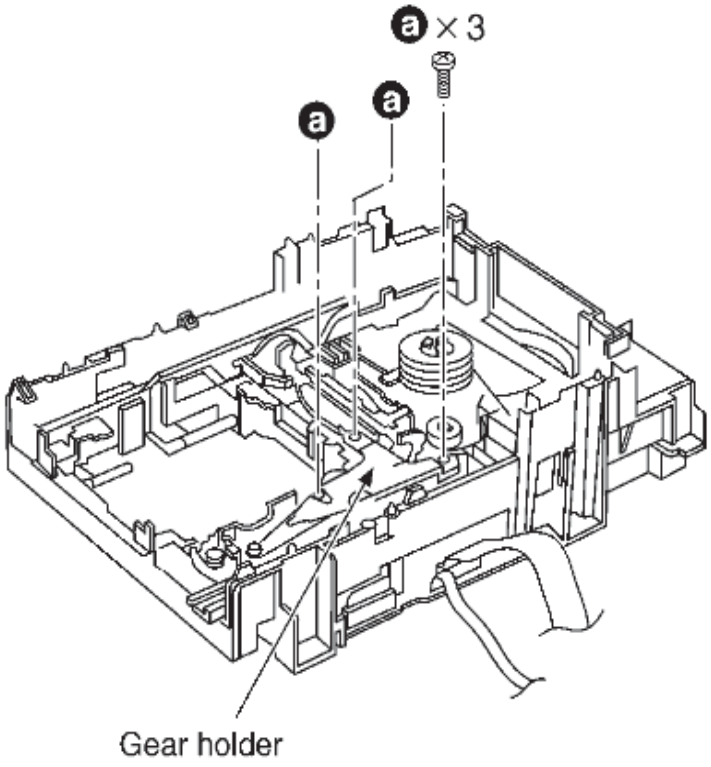

Step 14 Install the tray base, traverse ass'y, mechanism cover and upper plate.

[Operation check after servicing]

Check the proper operation of following items with gear and hexagonal screwdriver.

1. Open/close of tray base.
2. Moving the tray base to the stock side.
3. UP/DOWN operation of spindle base unit.
4. UP/DOWN operation of traverse ass'y.

10.13.4 Replacement for the motor ass'y

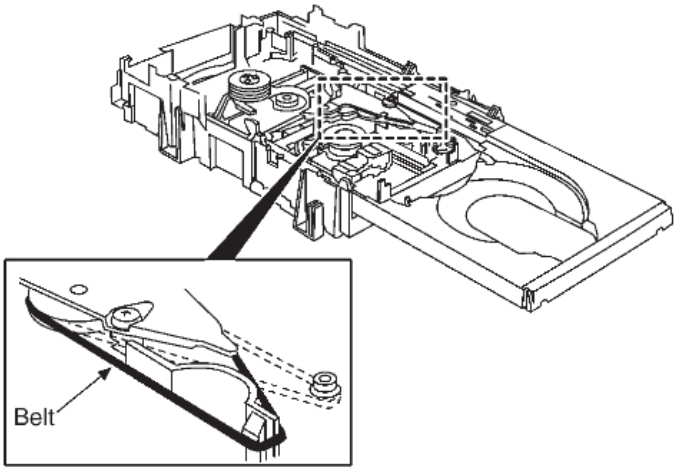

Step 1 Install the belt temporarily.

NOTE:
Take care not apply the grease to the belt.

Step 2 Upset the CD loading unit.

Step 3 Remove 3 screws

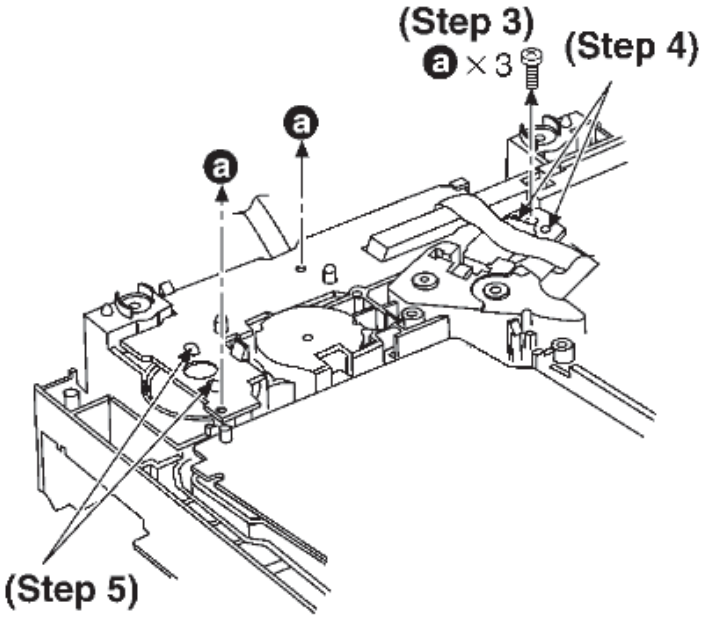

Step 4 Unsolder the plunger terminals (2 points).

Step 5 Unsolder the motor terminals (2 points).

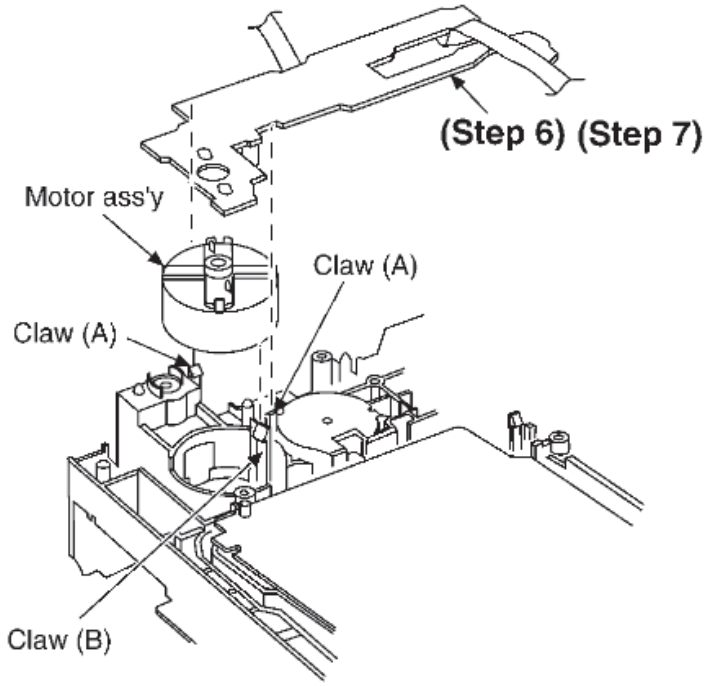

Step 6 Release the 2 claws (A), and then remove the Motor P.C.B.

Step 7 Release the claw (B), and then remove the motor ass'y.

[Notice for motor ass'y installation]

1. Locate the name plate of motor to the traverse ass'y.
2. Align the hole of motor with the ribs.

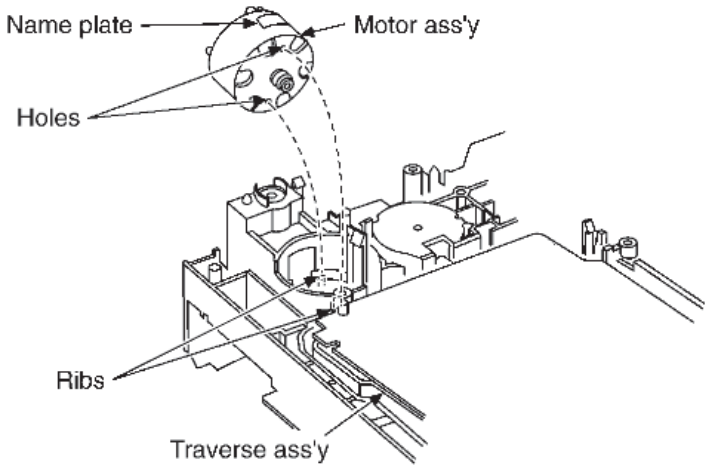

10.14 Replacement for the pinch roller ass'y and head block

- Follow the (Step 1) - (Step 2) of Item 10.2 - Disassembly of Top Cabinet
- Follow the (Step 1) - (Step 6) of Item 10.3 - Disassembly of CD Lid
- Follow the (Step 1) of Item 10.4 - Disassembly of the Rear Panel
- Follow the (Step 1) - (Step 3) of Item 10.5 - Disassembly of the CD Mechanism Unit
- Follow the (Step 1) - (Step 3) of Item 10.9 - Disassembly of the Front Panel Unit
- Follow the (Step 1) - (Step 5) of Item 10.10 - Disassembly of the Deck Mechanism Unit

*** The mechanism as shown below is for DECK1. For DECK 2, perform the same procedures.**

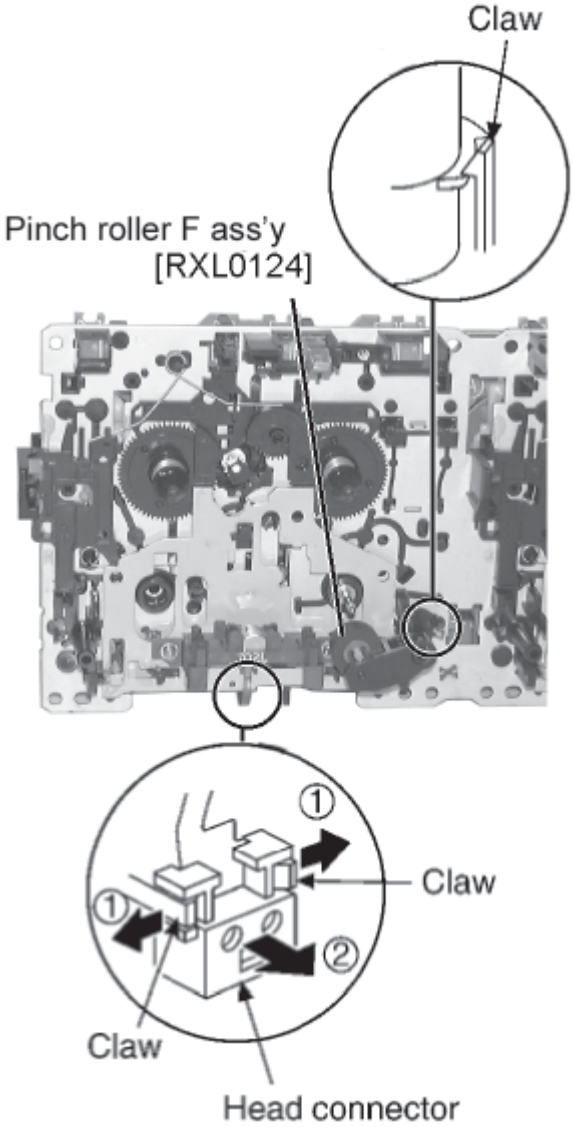

Step 1 Release the 2 claws, and then remove the pinch roller (R), (F).

Step 2 Release ther 2 claws, and then remove the head connector

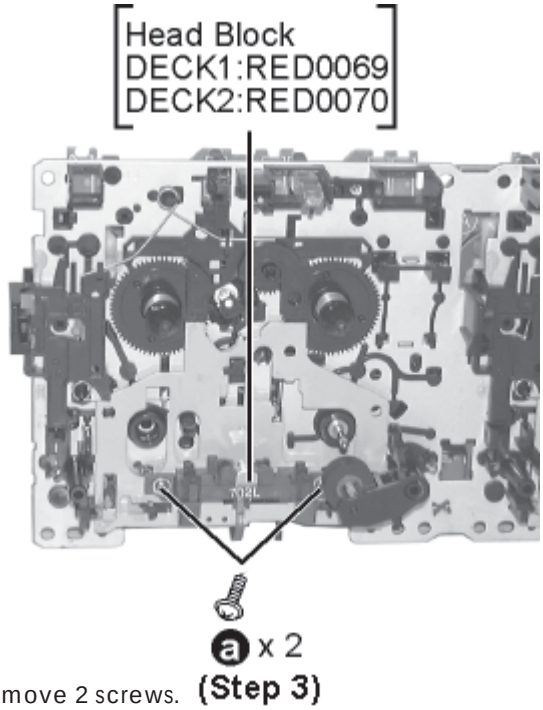

Step 3 Remove 2 screws.

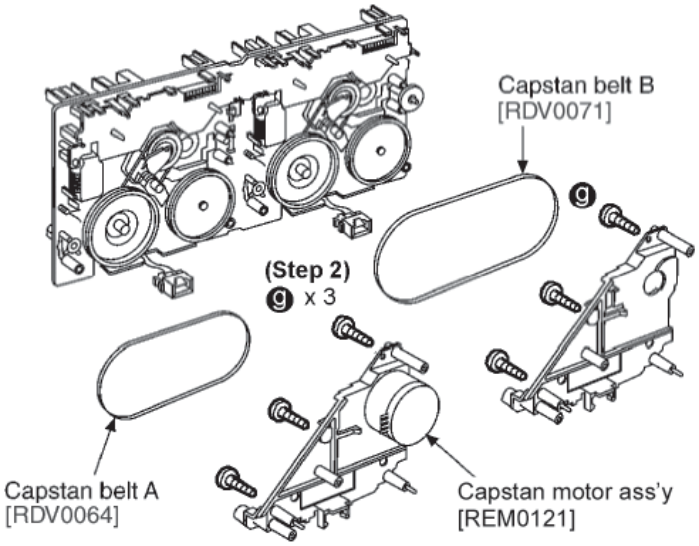

Step 4 Remove 3 screws.

10.15 Replacement for the pinch roller ass'y , capstan belt A, capstan belt B and winding belt

- Follow the (Step 1) - (Step 2) of Item 10.3 - Disassembly of Top Cabinet
- Follow the (Step 1) - (Step 6) of Item 10.4 - Disassembly of CD Lid
- Follow the (Step 1) of Item 10.5 - Disassembly of the Rear Panel
- Follow the (Step 1) - (Step 3) of Item 10.6 - Disassembly of the CD Mechanism Unit
- Follow the (Step 1) - (Step 3) of Item 10.11 - Disassembly of the Front Panel Unit
- Follow the (Step 1) - (Step 5) of Item 10.12 - Disassembly of the Deck Mechanism Unit.

Step 1 Release the 2 claws, and then remove the head connector.

Step 2 De-solder plunger point.

Step 3 Remove the Deck Mechanism P.C.B.

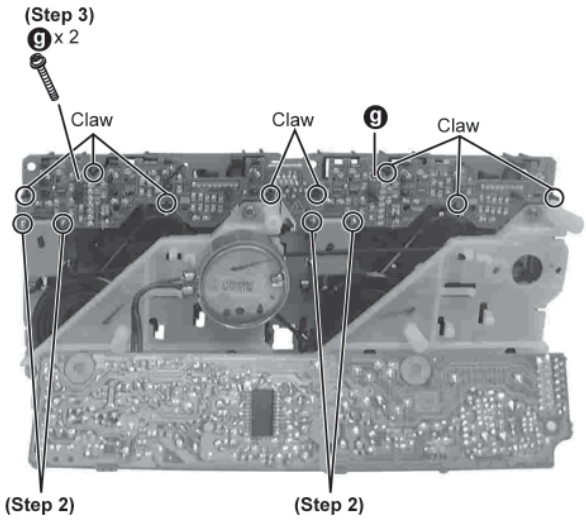

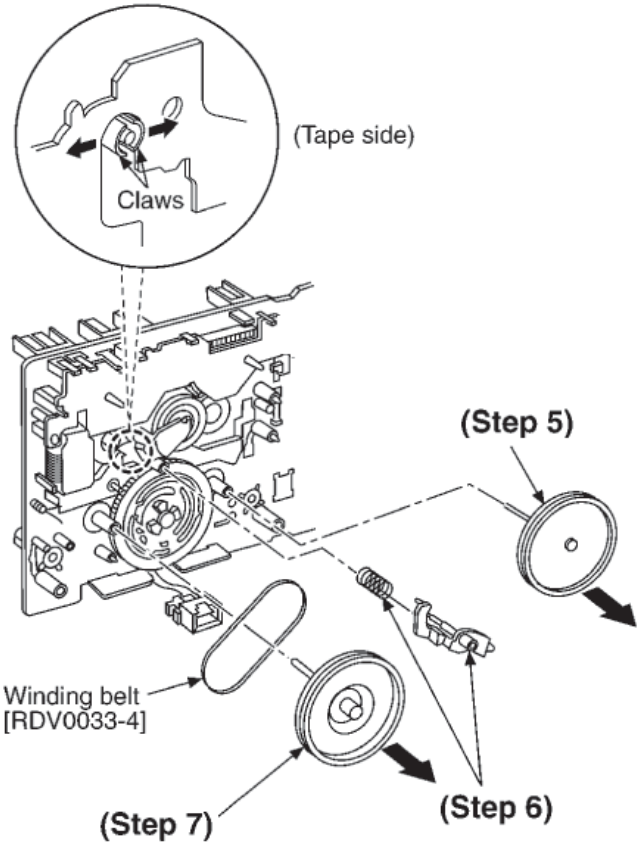

Step 5 Remove the flywheel R.

Step 6 Release the claw of tape side, and then remove the winding lever and spring.
Step 7 Remove the flywheel F.

[Installation of the belt]

Step 1 The boss and marking should be positioned horizontally.

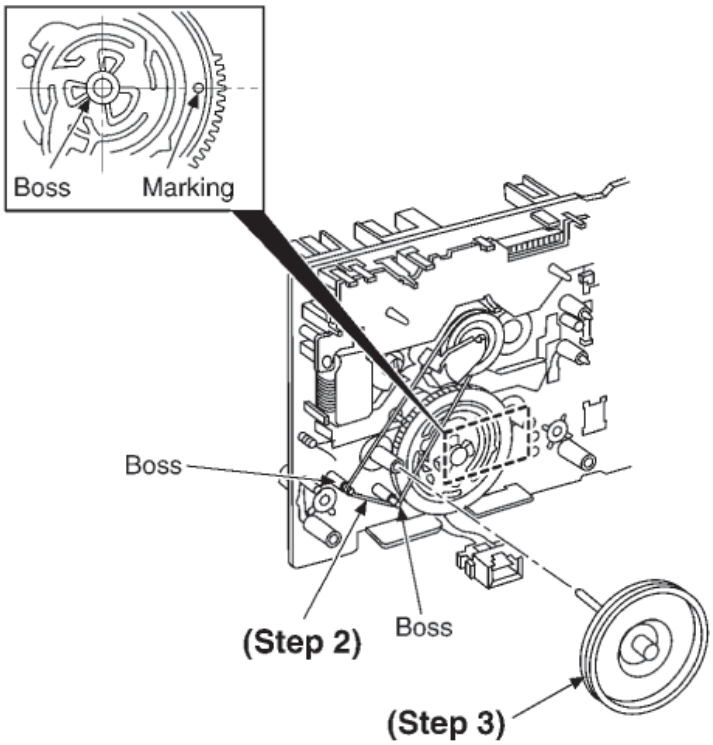

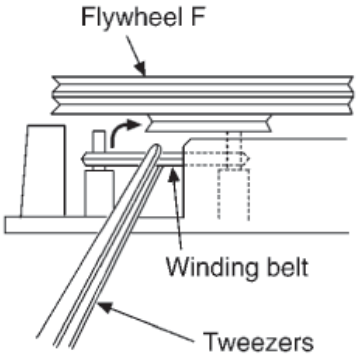

Step 2 Put the winding belt on the pulley temporarily.

Step 3 Install the flywheel F.

Step 4 Put the winding belt on the flywheel F.

Step 5 Install the winding lever and spring while pressing the winding arm in the direction of arrow.

Step 6 Install the flywheel R.

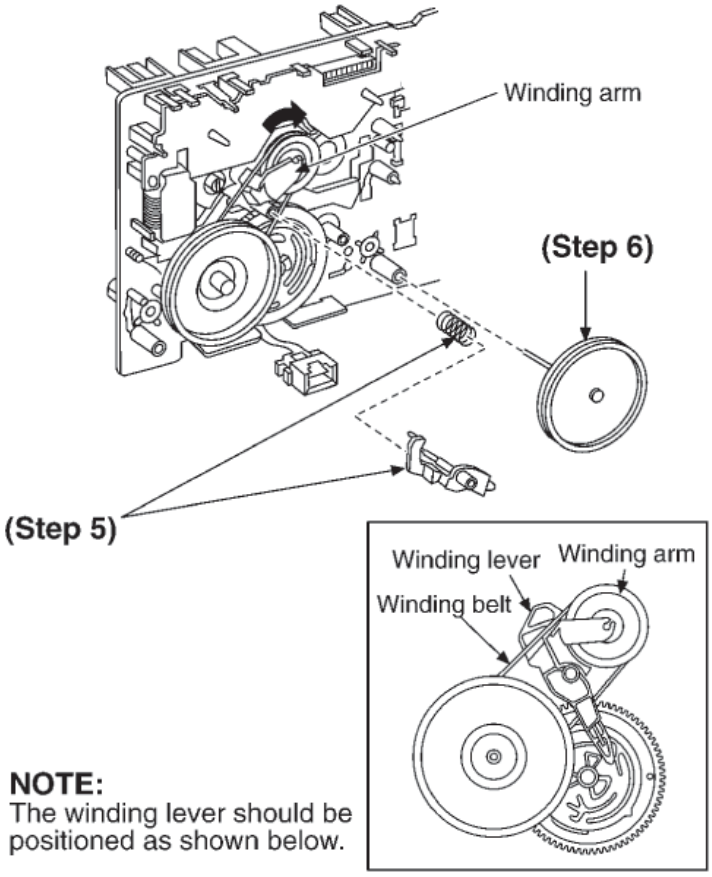

NOTE:
The winding lever should be positioned as shown below.

Step 7 Put the capstan belt A temporarily as shown below.

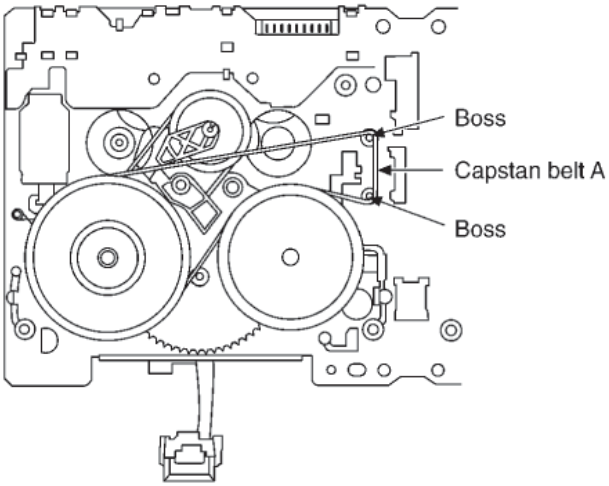

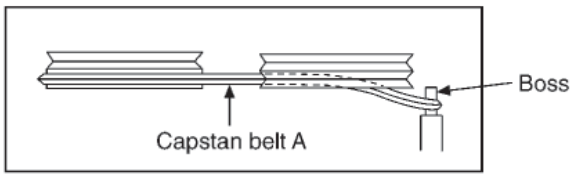

(Side view)

Step 8 Put the capstan belt B on the motor ass'y pulley.

Step 9 Install the sub chassis to the mechanism, and then tighten screws.

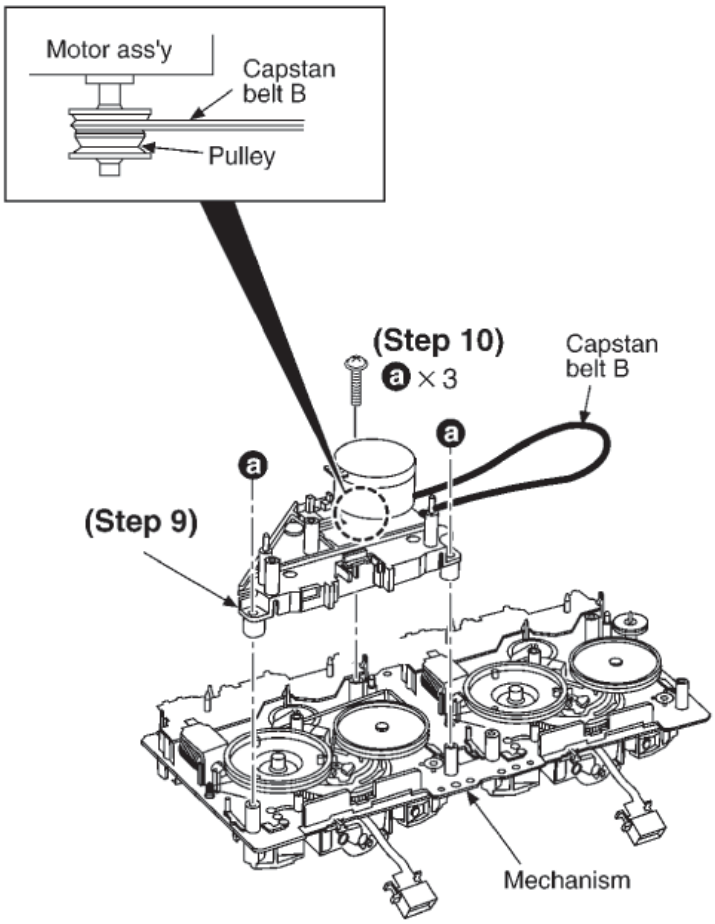

Step 10 Remove 3 screws.

Step 11 Put the capstan belt B as shown below.

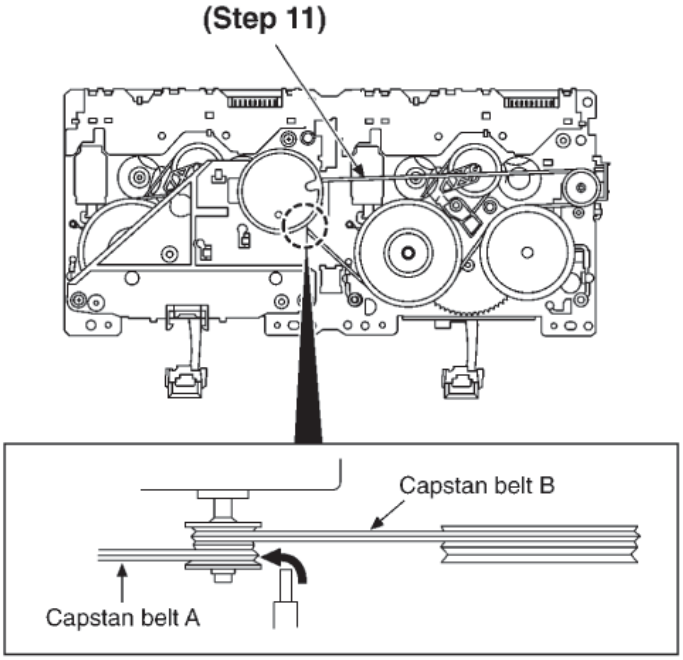

Step 12 Put the capstan belt A on the motor ass'y pulley.

10.16 Replacement for the cassette lid ass'y

•• Follow the (Step 1) - (Step 2) of Item 10.3 - Disassembly of Top Cabinet

Step 1 Force the lever upward, open the cassette lid ass'y. (For DECK1 and DECK2)

Step 2 Lift up the cassette lid ass'y in the direction of arrow. (For DECK1 and DECK2).

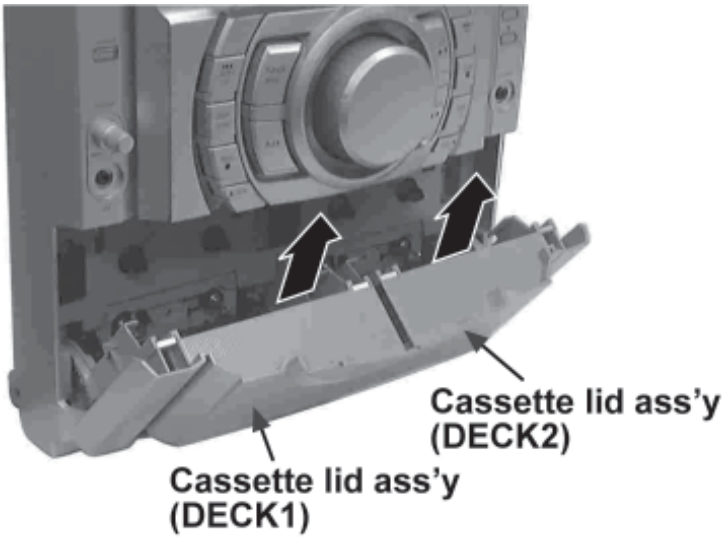

Step 3 Remove the cassette lid ass'y. (For DECK1 and DECK2).

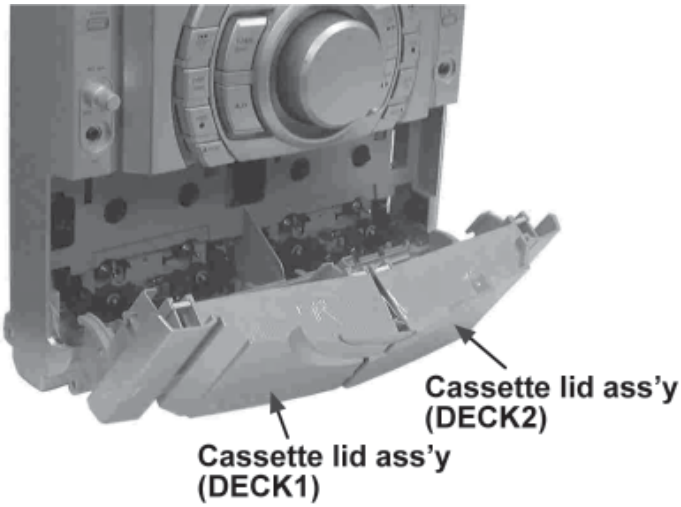

10.17 Rectification for tape jam problem

- Follow the (Step 1) - (Step 2) of Item 10.3 - Disassembly of Top Cabinet

Step 1 If a cassette tape cannot be removed from the deck since the tape is caught by the capstan or pinch roller during playback or recording, rotate the flywheel F in the direction of the arrow to remove the tape.

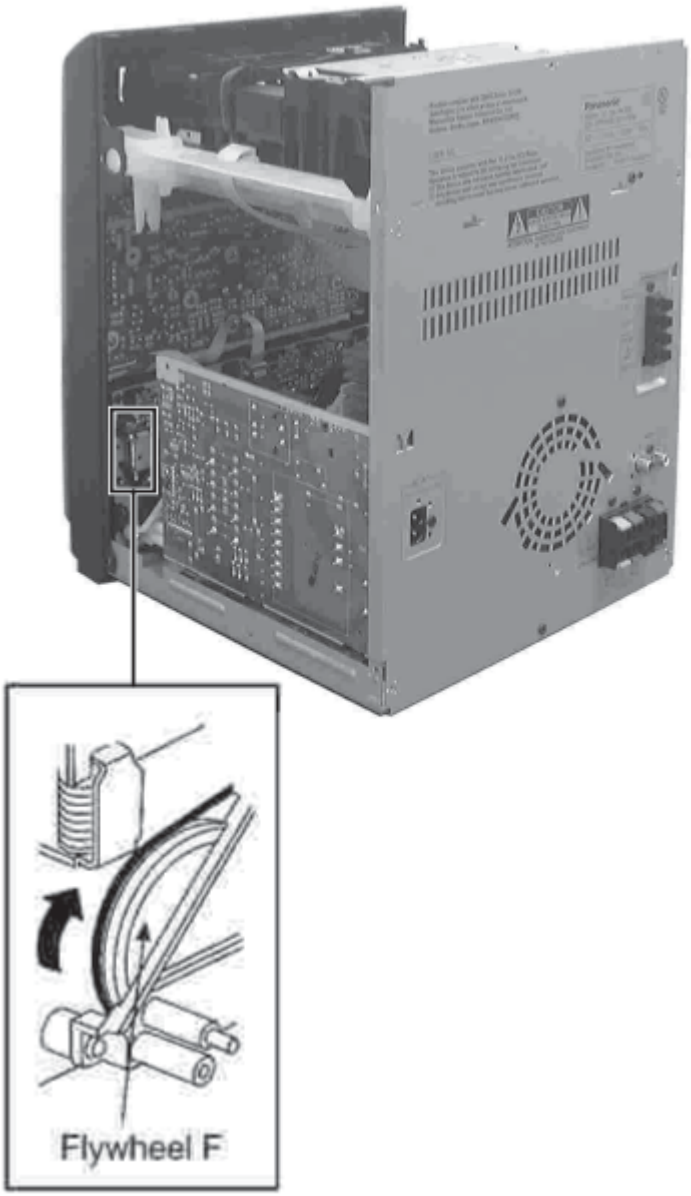

Step 2 Force the lever upward and open the cassette lid ass'y. Take the cassette tape off.

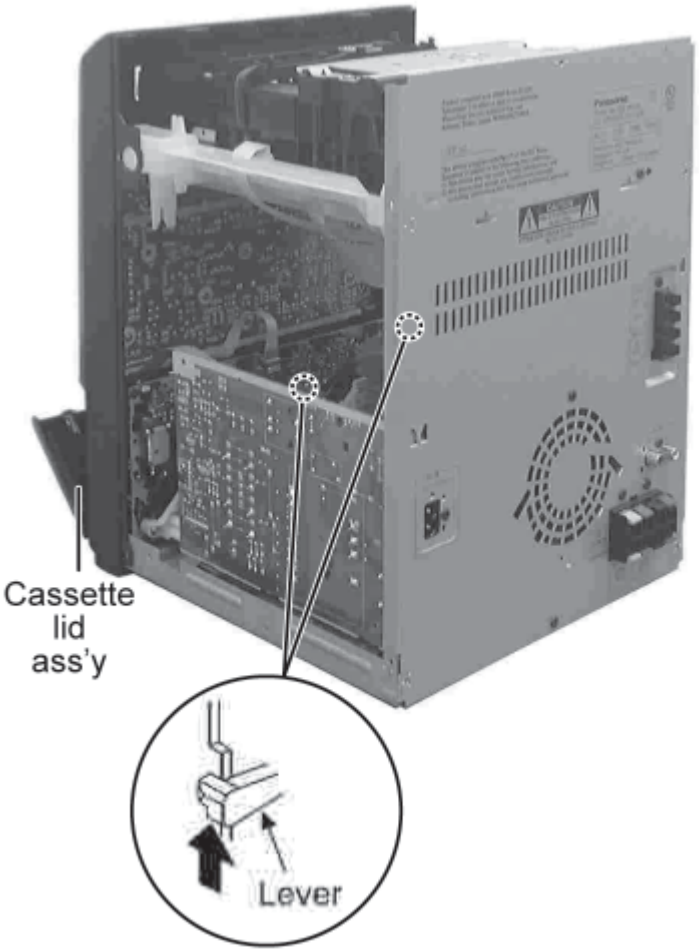

11 Checking for major P.C.B.

Note:
Checking of all major P.C.Bs (Main P.C.B., Panel P.C.B., Deck P.C.B., Deck Mechanism P.C.B., Transformer P.C.B., Power P.C.B.) can be carried out using below procedures.

For the disassembling procedure, see Section 10.

11.1 Checking for Main P.C.B.

1. Remove Top Cabinet and Rear Panel.
2. Remove CD Lid.
3. Remove CD Mechanism Unit.
4. Connect FFC wires (CN2801 & CN2805) from CD Mechanism Unit

11.2 Checking for Transformer P.C.B.

1. Remove Top Cabinet and Rear Panel.
2. Remove CD Lid.
3. Remove CD Mechanism Unit.
4. Connect FFC wires (CN2801 & CN2805) from CD Mechanism Unit.

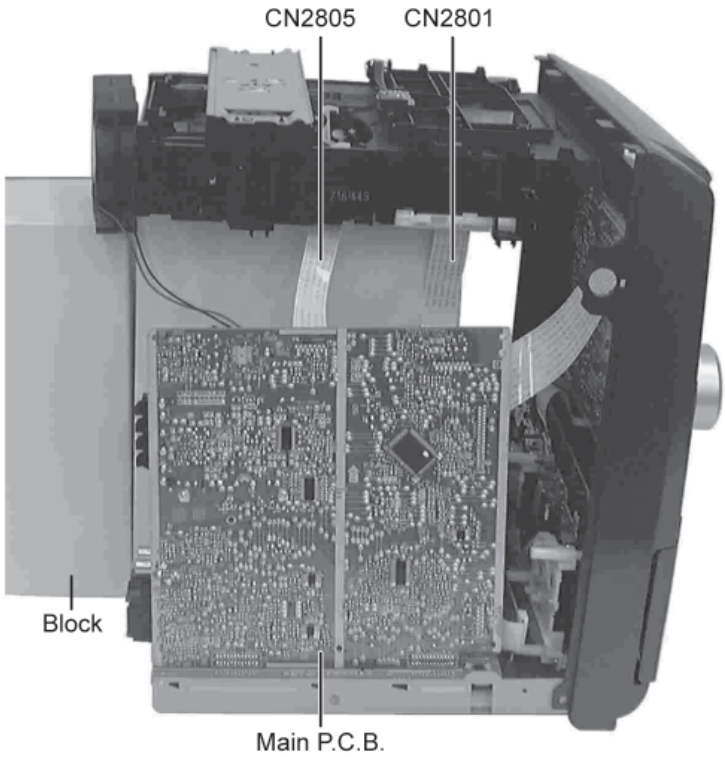

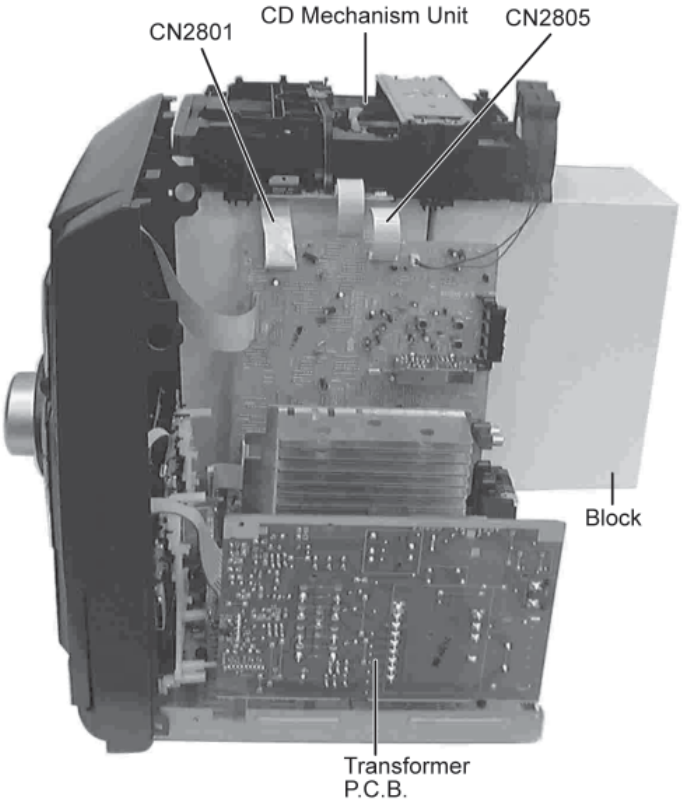

11.3 Checking of Panel, Deck& Deck Mechanism P.C.B.

1. Remove Top Cabinet.
2. Remove CD Lid.
3. Remove CD Mechanism Unit.
4. Remove volume knob at front panel.
5. Remove Panel P.C.B.
6. Remove Deck Mechanism Unit.
7. Use the extension cable (A) to reconnect (CN1001) Deck P.C.B. and (CN2803) Main P.C.B.
8. Use the extension cable (B) to reconnect (CP6401) Panel P.C.B. and (CN971) Deck Mechanism P.C.B.

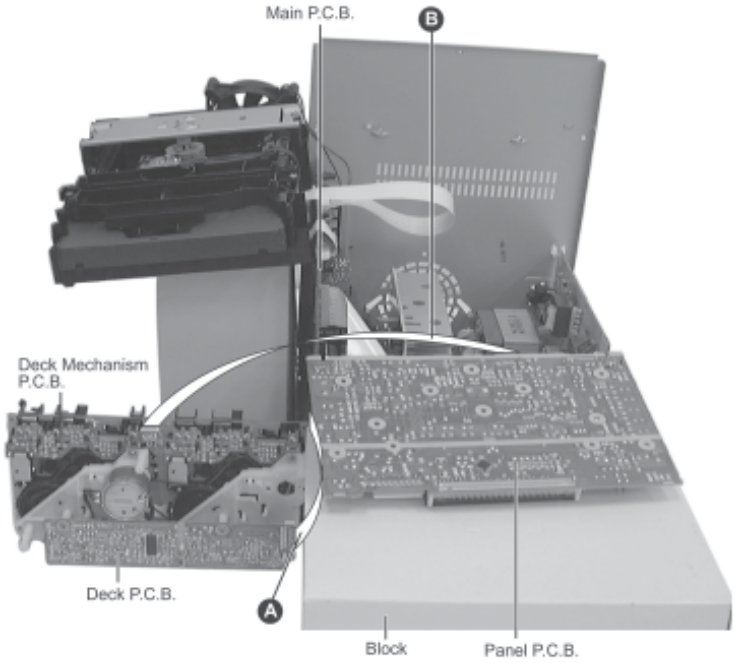

Service Tools	
Extension FFC	
(A) Deck P.C.B. - Main P.C.B. (14 Pins)	REEX0485
(B) Panel P.C.B. - Deck Mechanism P.C.B. (10 Pins)	REEX0484

11.4 Checking the Power P.C.B.

1. Remove Top Cabinet and Rear Panel.
2. Remove CD Lid.
3. Remove CD Mechanism Unit.
4. Remove 3 screws at Transformer P.C.B..
5. Remove 2 screws at heat sink and 1 screw at Power P.C.B.
6. Flip the Power P.C.B.
7. Insulate the Power P.C.B. with insulation material to avoid short circuit.
8. Use the extension cable (A) to reconnect (CN1001) Deck P.C.B. and (CN2803) Main P.C.B.
9. Use the extension cable (B) to reconnect (CP6401) Panel P.C.B. and (CN971) Deck Mechanism P.C.B.
10. Use the extension cable (C) to reconnect (H5950/ W5950) Power P.C.B. and (CN5950) Transformer P.C.B.

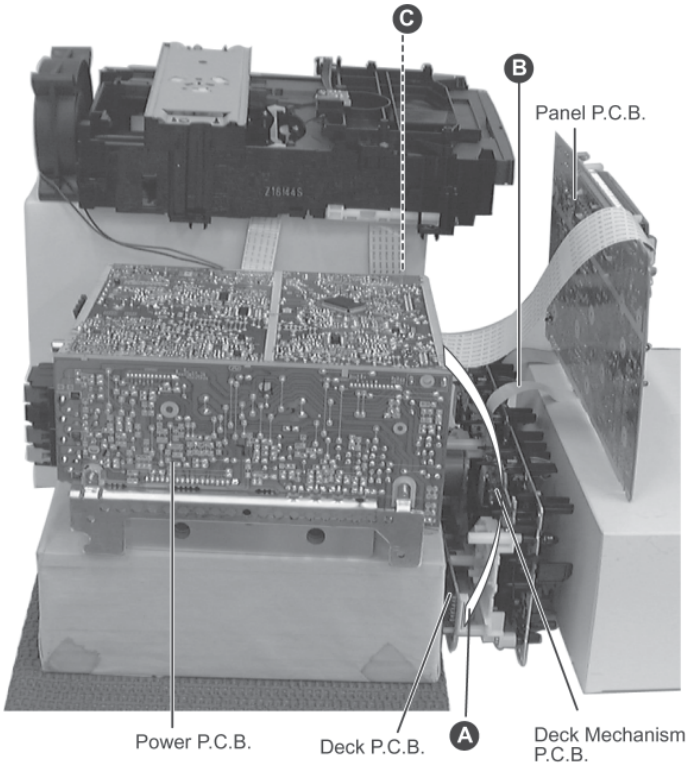

Service Tools	
Extension FFC	
(A) Deck P.C.B. - Main P.C.B.	REEX0485 (14 Pins)
(B) Panel P.C.B. - Deck Mechanism P.C.B.	REEX0484 (10 Pins)
(C) Power P.C.B. - Transformer P.C.B.	RFKAK330 (9 Pins)

12 Self-Diagnostic Function

12.1 Self-diagnostic display

This unit is equipped with a self-diagnostic display function which, if a problem occurs, will display an error code corresponding to the problem.

Use this function when performing maintenance on the unit.

12.2 How to enter the Self-Diagnostic Function

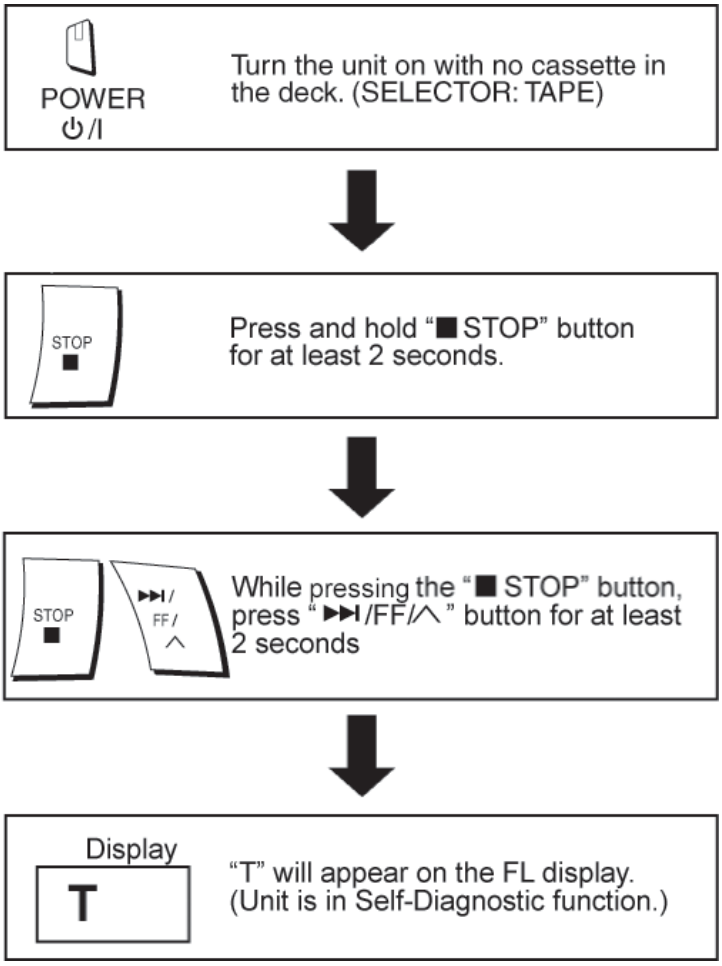

12.3 Cassette Mechanism Test (For error code H01, H02, H03, F01)

1. Press "TAPE, DECK 1/2" to select Deck 2.

2. Load a cassette tape with the erasure prevention tab, remove from left side only and close the cassette holder.

3. Press "FAST FORWARD MEMORY" (Tape will be stop after 2 seconds)

4. Load a cassette tape with the erasure prevention tab, remove from right side only and close the cassette holder.

5. Press "REVERSE FM MODE/BP" (Tape will be stop after 2 seconds)

6. Load a pre-recorded tape with both side record tabs intact and close the cassette holder.

7. Press "PLAY/TUNE/TIME ADJ UP" (After TPS function, tape will stop automatically)

8. Press "REC/STOP" (Tape will not move)

9. Press "STOP/TUNE MODE" to indicate Error code.

○ If several problem exist, error code will change each time when " /STOP" is pressed. (e.g. H01 ! H03 ! F01 .....etc.)

10. Press "TAPE, DECK 1/2" to select Deck 1.

11. Repeat step 2 to 9 to test Deck 1. (Tape Deck 1 will not check H02 because of no recording function)

12.4 CD Mechanism Test (F15, F26, F16, F17, F27, F28, F29, F30, H15& H16)

1. Press "CD". [▶/II, CD]

2. Press "OPEN/CLOSE (1)" and place a CD. [⏏, OPEN/CLOSE]

3. Press "OPEN/CLOSE (1)" to close the tray. [⏏, OPEN/CLOSE]

4. Press "OPEN/CLOSE (5)" and wait until the tray is open. [⏏, OPEN/CLOSE]

5. Press "OPEN/CLOSE (1)" and remove the CD.

6. Press "OPEN/CLOSE (1)" to close the tray. [⏏, OPEN/CLOSE]

7. Press "/STOP" to indicate Error Code. [⏏, OPEN/CLOSE]

○ If several problem exist, error code will change each time when "/STOP" is pressed. (e.g. F15 ! F26 ! F16 ....etc).

12.5 To clear all Error code

1. Press “STOP/TUNE MODE” button for 5 seconds.
[■, STOP]
2. FL indicator shows “CLEAR” for 1 second and change to “T”.

12.6 To exit from Self-Diagnostic function

1. Press “Power” button OFF.
[⏻/I, POWER]

12.7 Power Amplifier Failure (F61)

1. When power amplifier fail, F61 will indicate automatically.

12.8 Description of Error Code

12.8.1 Abnormality detection for Deck Mechanism block

No.	Abnormal Items	Error Display	Method of Detection
1	MODE SW abnormal	H01	Normal operation during mecha transition, MODE SW abnormal is memorized. The content of abnormality can be confirmed in the abnormal detection mode explained in the later section.
2	REC INH SW abnormal	H02	The content of abnormality can be confirmed in the abnormal detection mode explained in the later section.
3	HALF SW abnormal	H03	The content of abnormality can be confirmed in the abnormal detection mode explained in the later section.
4	Reel pulse abnormal	F01	The content of abnormality can be confirmed in the abnormal detection mode explained in the later section.

12.8.2 Abnormality detection for CD/Changer block

No.	Abnormal Items	Error Display	Method of Detection
1	REST SW abnormal	F15	Under normal operation (Self-Diagnostic Mode inclusive), this error occurs when the REST SW ON is not detected within the specified time and shall be memorized.
2	Transmission error between	F26	Under normal operation (Self-Diagnostic Mode inclusive), this error occurs when CD servo LSI and micon the selection is set to CD and SENSE=’H’ is detected and SENSE=’L’ is notdetected within a fail safe time (20ms) after system command transmission was sent.
3	CLAMP SW abnormal	F16	Refer to section 12.8.4 (Mechanism Error Code Table) [M-0A] error is detected.
4	BOTTOM SW abnormal	F17	Refer to section 12.8.4 (Mechanism Error Code Table) [M-09] error is detected.
5	POSITION SW abnormal	F27	Refer to section 12.8.4 (Mechanism Error Code Table) [M-05 ~ M-08] error is detected.
6	SW1 abnormal	F28	Refer to section 12.8.4 (Mechanism Error Code Table) [M-02 ~ M-08] error is detected.
7	SW2 abnormal	F29	Refer to section 12.8.4 (Mechanism Error Code Table) [M-02 ~ M-08] error is detected.
8	OPEN SW abnormal	H15	Refer to section 12.8.4 (Mechanism Error Code Table) [M-01] error is detected.
9	CLOSE SW abnormal	H16	Refer to section 12.8.4 (Mechanism Error Code Table) [M-01] error is detected.
10	DISC SENSOR	F30	Refer to section 12.8.4 (Mechanism Error Code Table) [M-01] error is detected.

12.8.3 Power supply related error detection

No.	Abnormal Items	Error Display	Method of Detection
1	POWER AMP	F61	During normal operation, if DCDET 1/2 becomes 'L', normal POWER OFF process shallnot be output abnormal executed, PCNT shall be switched to 'L' immediately. GOODBYE shall not be displayedand the error display F61 will be displaye instead.2 seconds after the F61display, ECONO shall be set to 'L' and FL display shall be turned off.The error content shall be memorized when the abnormality occurs and canbe displayed in the C-mecha self-diagnostic mode described later.

12.8.4 Error Code (CR20 Mechansim)

1. If mechanism problem occurs during normal or aging mode, the error code is "remembered" and shown on the FL display.

2. Reset Condition of Error Code

   A During cold start of micro-processor IC.

   B Restart of aging mode for the mechanism unit.

3. Mechanism Error Code

Mechansim Error Code Table

Error Code	Description
M-00	No Error
M-01	OPEN Position - Horizontal Motion Abnormality at play position
M-02	PLAY Position - Horizontal Motion Abnormality at stock position
M-03	PLAY Position - Horizontal Motion Abnormality during changing position
M-04	CHANGE Position - Horizontal Error of Stock position
M-05	CHANGE Position - Ascending motion Error
M-06	CHANGE Position - Descending motion Error
M-07	STOCK Position - Ascending motion Error
M-08	STOCK Position - Descending motion Error
M-09	Abnormality during change position (bottom switch)
M-0A	Clamp Error
M-0B access)	Access Failure - Access Time of more tha 30 secs (Total time of automatic ! Read TOC ! Track

4. When the mechanism unit stops due to error during aging model, error code is remembered and counts of the errors are displayed on the FL display.

13 CD Test Mode Function

This CD test mode is provided to check CD unit without connecting to changer loading mechanism. This mode shall operate CD PLAY with CD unit being connected only and CD Automatic Alignment result is shown on FL display.

13.1 How to set CD test mode

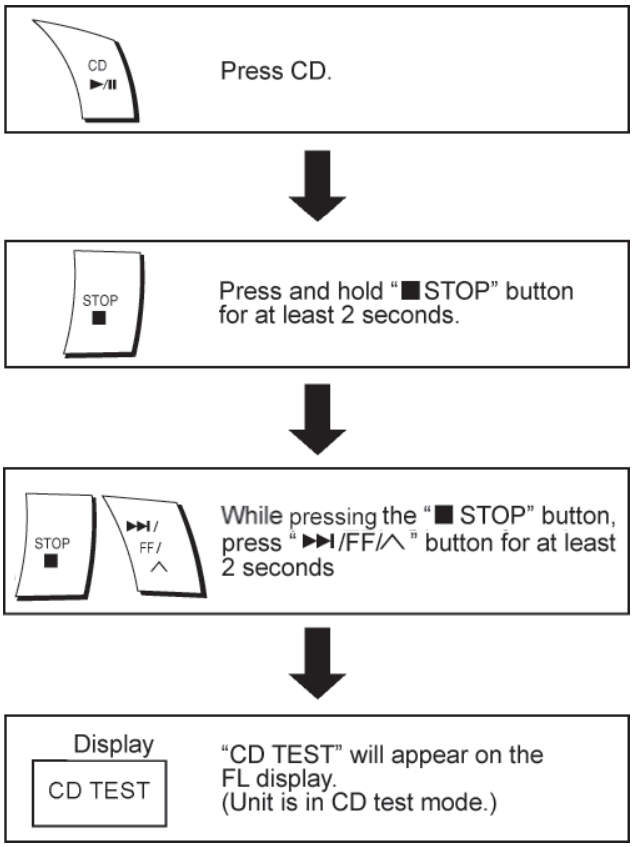

13.2 CD Automatically Adjustment result indication

Under CD test mode, pressing the numeric key '0' on the remote controller will display the auto adjustment result. FLOCK, TLOCK and CLVS status shall be shown as below:

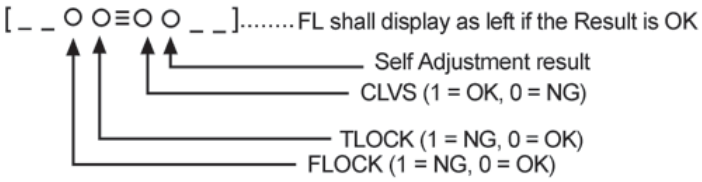

During the above display, executing CD PLAY will display auto adjustment result for CD PLAY mode.

13.3 CD Mecha Aging Test Mode (CR20)

1. Functional summary of CD aging test mode

It is for the purpose to determine the reliability of the CD changer.

2. To enter into CD aging test mode

a) First, enter into self-diagnostic mode (Refer to Section 12.2. How to enter the Self-Diagnostic Function)

b) In the self-diagnostic mode, switch the SELECTOR to

[►/II, CD] and press

[|◄◄/REW/∨] . It will enter into CD aging test mode.

When in CD Aging test mode, the following operation will begin and repeated:

1. [DISC STOCKER] → DISC LOAD → TRAY OPEN (2 secs) → TRAY CLOSE] as one count.

2. DISC 1 → DISC 2 → DISC 3 → DISC 4 → DISC 5 → DISC1.....repeating this endlessly.

· While performing the above operation, the FL display will show the number of its operations starting from 00001. With reference to figure as below.

· It shall move up one counter when the above operations ends. The counter will reset to 00000 when 99999 is reached.

· To exit CD aging test mode, press

[⏻/I, POWER] button, the tray will return to its PLAY position and power will be off.

13.4 Micon ROM Checksum and Version Display Mode

1. Functional Summary

Display version number and calculated checksum of the micon software.

2. To enter into Micon ROM checksum and Version Display Mode.

a) Enter into Self-Diagnostic Mode (Refer to Section 12.2).

b) In the Self-Diagnostic Mode, Press

[►/II, CD] twice.

The version number and the calculated ROM Checksum of the current software will be displayed on the FL as shown in this example:

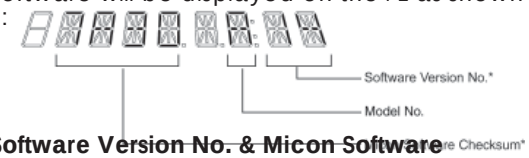

*** Note: The Software Version No. & Micon Software Checksum differs from set to set.**

· The ROM Checksum is calculated on demand, not hard coded.

· The ROM Checksum is calculated by talking the arithmetic SUM of the ROM contents form the programs's START address until the END address.

START address = [1080]H

END address = [FFFD]H

14.1 Cassette Deck Section

- Measurement Condition
  - Make sure head, capstan and press roller are clean.
  - Judgeable room temperature 20 ± 5 °C (68 ± 9°F)
- Measuring instrument
  - EVM (DC Electronic voltmeter)
  - Digital frequency counter
- Test Tape
  - Tape speed gain adjustment (3 kHz, -10 dB); QZZCWAT

14.1.1 Tape Speed Adjustment (Deck 1/2)

1. Set the tape edit button to “NORMAL” position.

2. Insert the test tape (QZZCWAT) to DECK 2 and playback (FWD side) the middle portion of it.

3. Adjust Motor VR (DECK 2) for the output value shown below.

Adjustment target: 2940 ~ 3060 Hz (NORMAL speed)

4. After alignment, assure that the output frequency of the DECK 1 FWD are within ±60 Hz of the value of the output frequency of DECK 2 FWD.

Fig.1

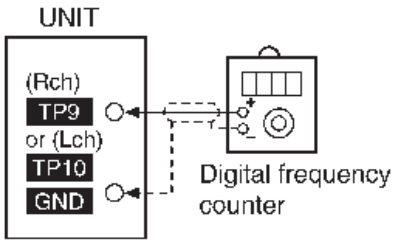

14.1.2 Bias and Erase Voltage Check

1. Set the unit “AUX” position.

2. Insert the Normal blank tape (QZZCRA) into DECK 2 and the unit to “REC” mode (use “• REC/STOP” key).

3. Measure and make sure that the output is within the standard value.

Bias voltage for Deck 2	14±4mV (Normal)
Erase voltage for Deck 2	80mV (Normal)

Fig.2

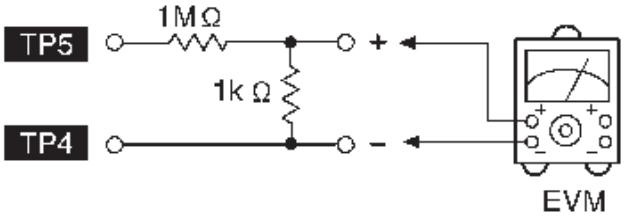

Fig.3

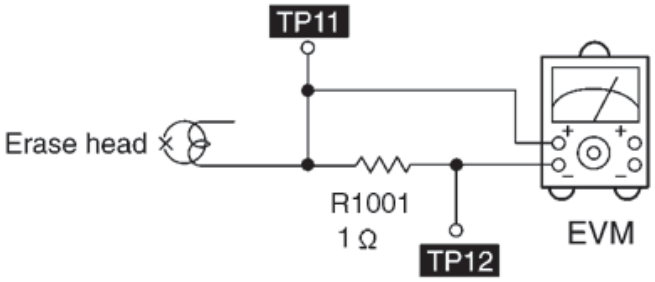

14.1.3 Bias Frequency Adjustment (Deck 1/2)

1. Set the unit to “AUX” position.

2. Insert the Normal blank tape (QZZCRA) into DECK 2 and set the unit to “REC” mode (• use “REC/STOP” key).

3. Adjust L1002 so that the output frequency is within the standard value.

Standard Value: 97 ±8 kHz

Fig.4

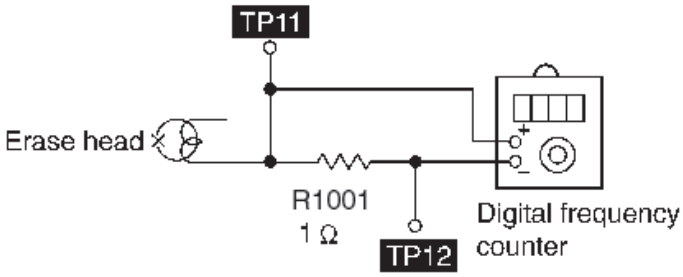

14.2 Tuner Section

14.2.1 AM-IF Alignment

1. Connect the instrument as shown in Fig.5.

2. Set the unit to AM mode.

3. Apply signal as shown in Fig. 5 from AM-SG.

4. Adjust Z2602 so that the output frequency is maximized in Fig. 6.

Fig.5

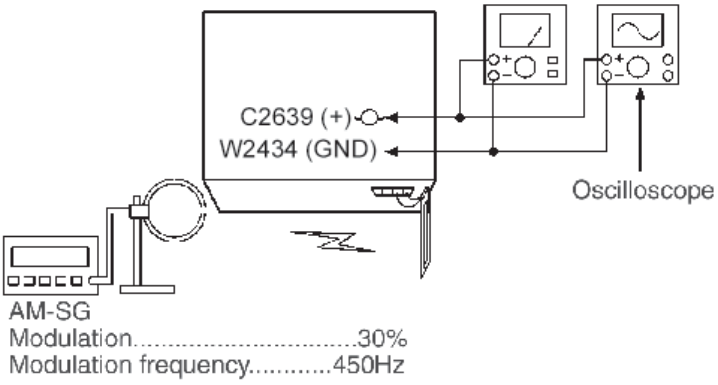

Fig.6

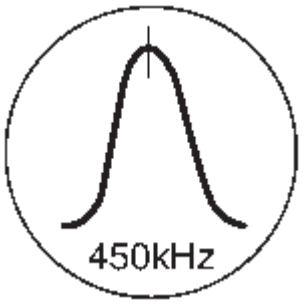

14.2.2 AM RF Adjustment

Connect the instrument as shown in Fig. 7.

Set the unit to AM mode.

Set AM-SG to 520kHz.

Receive 520kHz in the unit.

Adjust Z2602 (OSC) so that the EVM-AC is maximized.

Set AM-SG to 600Hz.

Receive 600Hz in the unit.

Adjust Z2602 (ANT) so that the EVM-SG is maximized.

Set AM-SG to 520kHz.

Receive 520kHz in the unit.

Adjust L2602 (OSC) so that the EVM-DC value is with 1.1±0.5V.

Fig.7

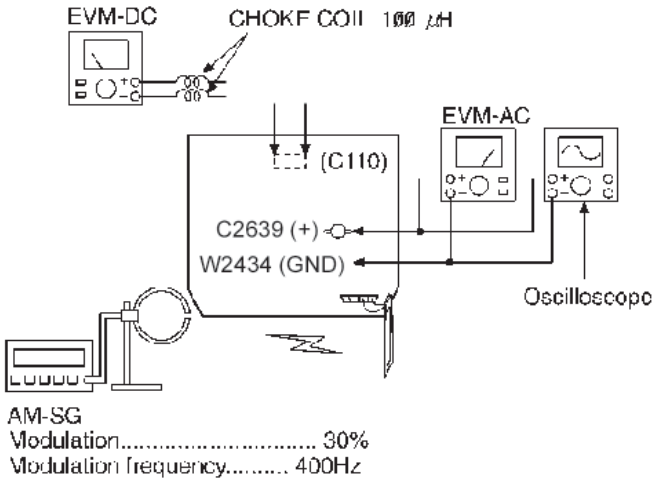

14.3 Alignment Points

14.3.1 Cassette Deck Section

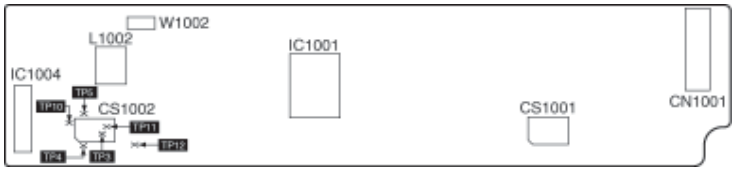

14.3.2 Tuner Section

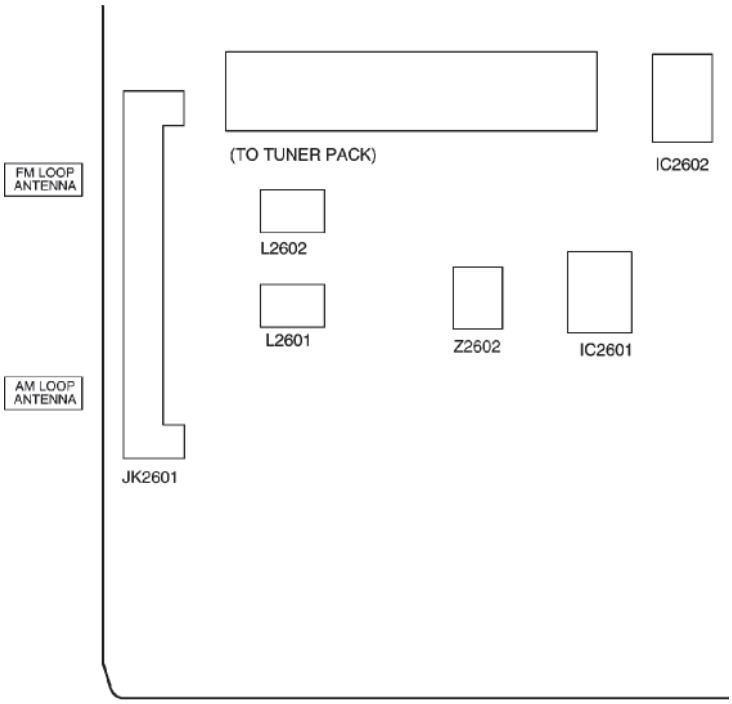

15 Block Diagram

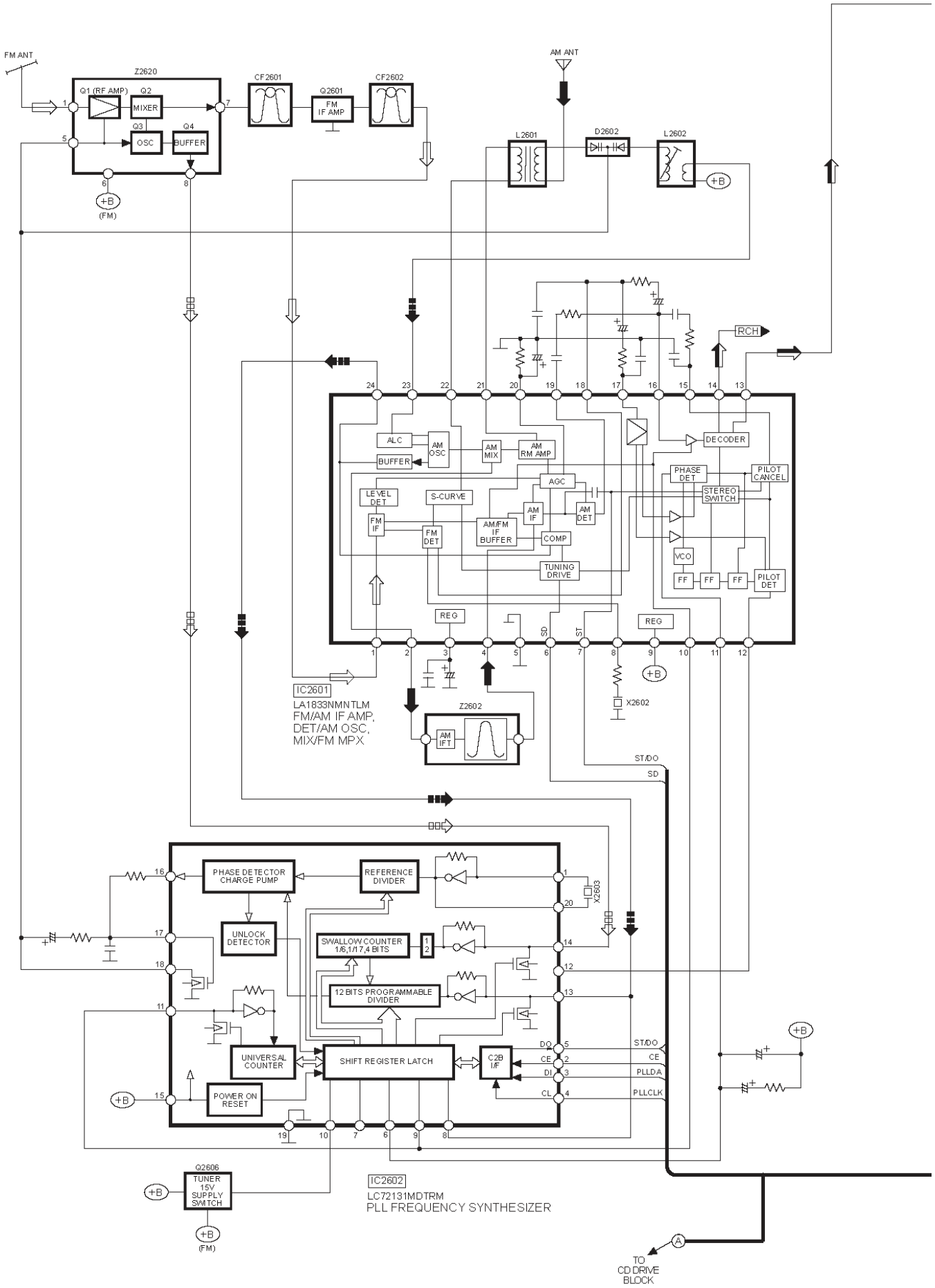

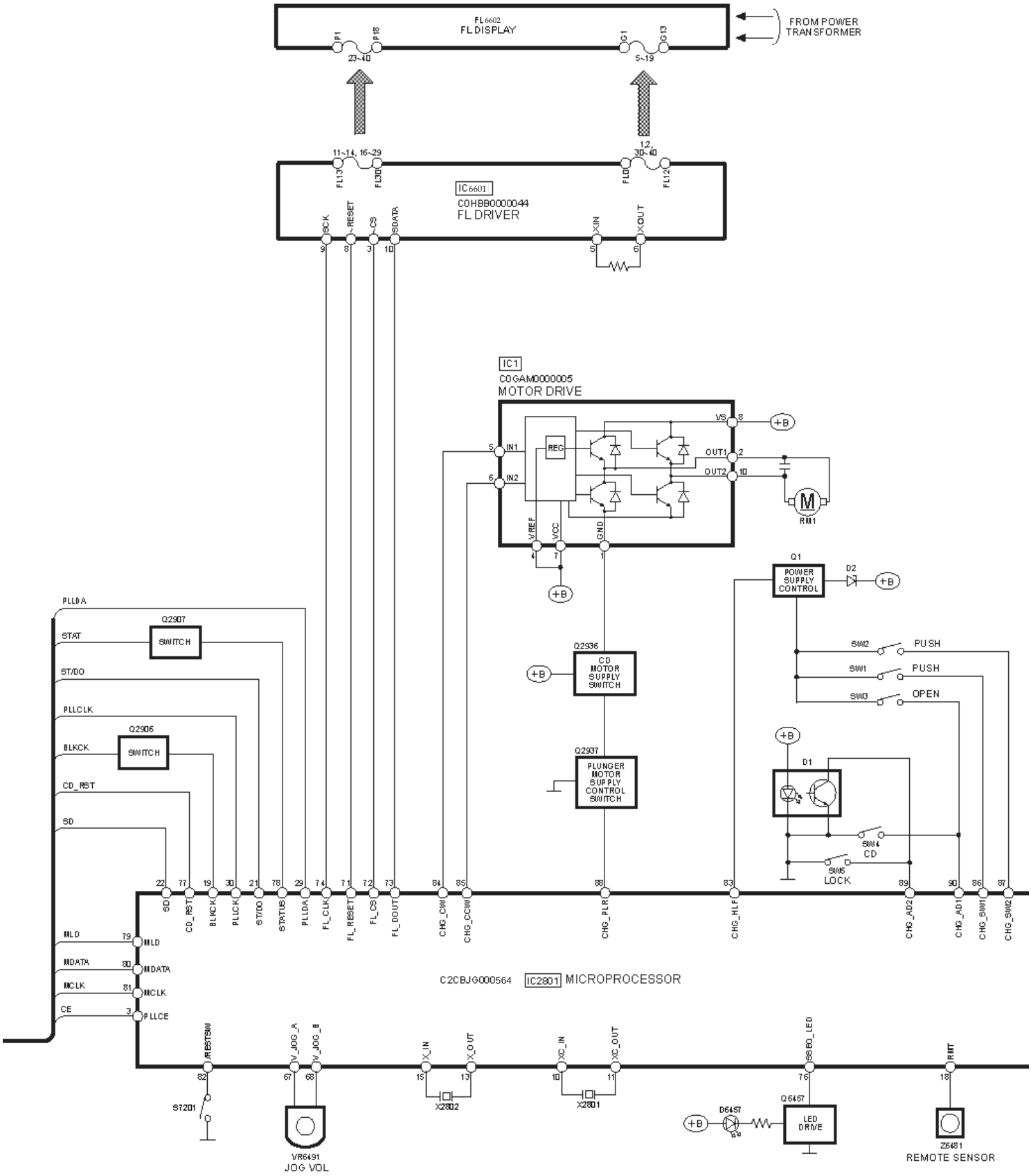
FL6602
FL DISPLAY
FROM POWER TRANSFORMER
IC6601
C0HBB0000044
FL DRIVER
IC1
C0GAM0000005
MOTOR DRIVE
REG
M
RM1
Q1
POWER SUPPLY CONTROL
D2
+B
Q2907
SWITCH
Q2906
SWITCH
Q2936
CD MOTOR SUPPLY SWITCH
Q2937
PLUNGER MOTOR SUPPLY CONTROL SWITCH
SW2
PUSH
SW1
PUSH
SW3
OPEN
D1
SW4
CD
SW5
LOCK
PLLDA
STAT
ST/DO
PLLCLK
BLKCK
CD_RST
SD
MLD
MDATA
MCLK
CE
C2CBJG000564
IC2801
MICROPROCESSOR
ST201
VR6491
JOG VOL
X2802
X2801
D6457
Q6457
LED DRIVE
Z6481
REMOTE SENSOR

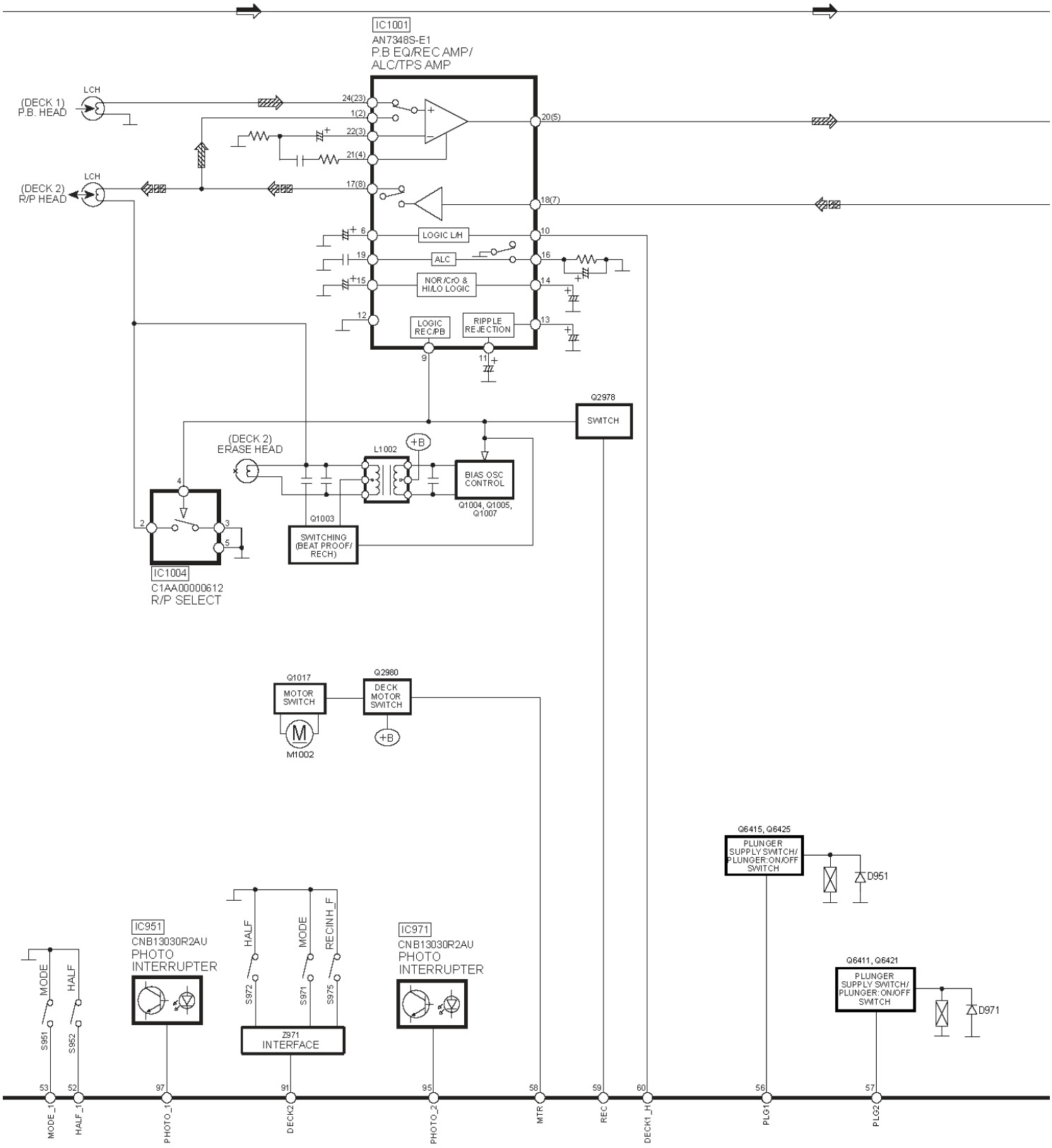

C2CBJG000564 IC2801 MICROPROCESSOR

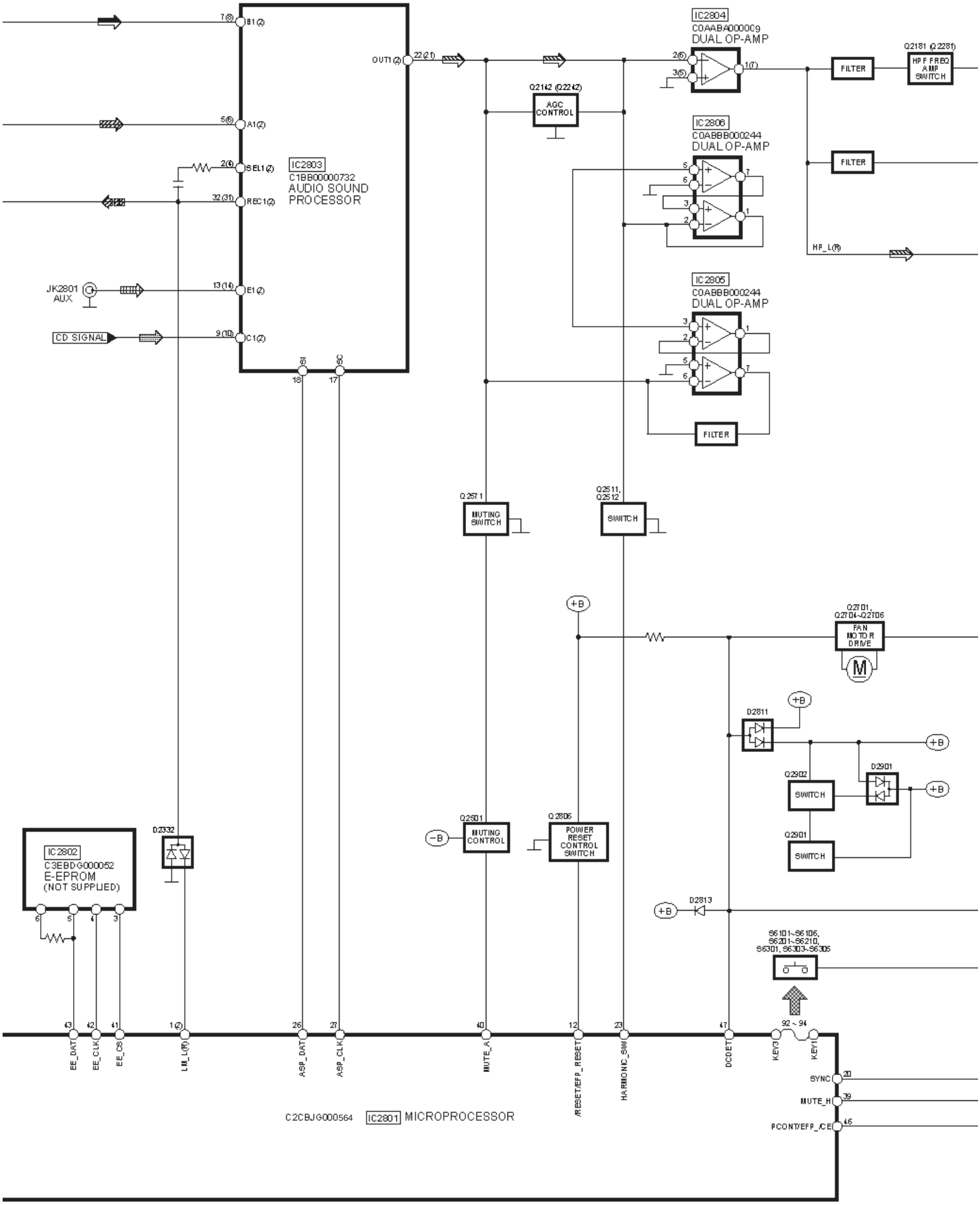
IC2803
C1BB00000732
AUDIO SOUND
PROCESSOR
IC2804
C0AABA000009
DUAL OP-AMP
IC2806
C0ABBB000244
DUAL OP-AMP
IC2805
C0ABBB000244
DUAL OP-AMP
Q2142 (Q2242)
AGC
CONTROL
Q2181 (Q2281)
HPF FREQ
AMP
SWITCH
FILTER
HP_L(R)
JK2801
AUX
CD SIGNAL
Q2571
MUTING
SWITCH
Q2511,
Q2512
SWITCH
+B
Q2701,
Q2704~Q2706
FAN
MOTOR
DRIVE
D2811
Q2902
SWITCH
D2901
Q2901
SWITCH
Q2501
MUTING
CONTROL
Q2806
POWER
RESET
CONTROL
SWITCH
-B
D2332
IC2802
C3EBDG000052
E-EPROM
(NOT SUPPLIED)
D2813
S6101~S6106,
S6201~S6210,
S6301, S6303~S6305
EE_DAT
EE_CLK
EE_CS
LIN_L(R)
ASP_DAT
ASP_CLK
MUTE_A
/RESET/EFP_RESET
HARMONIC_SW
DCDET
KEY3
KEY1
SYNC
MUTE_H
PCONT/EFP_/CE
C2CBJG000564
IC2801
MICROPROCESSOR

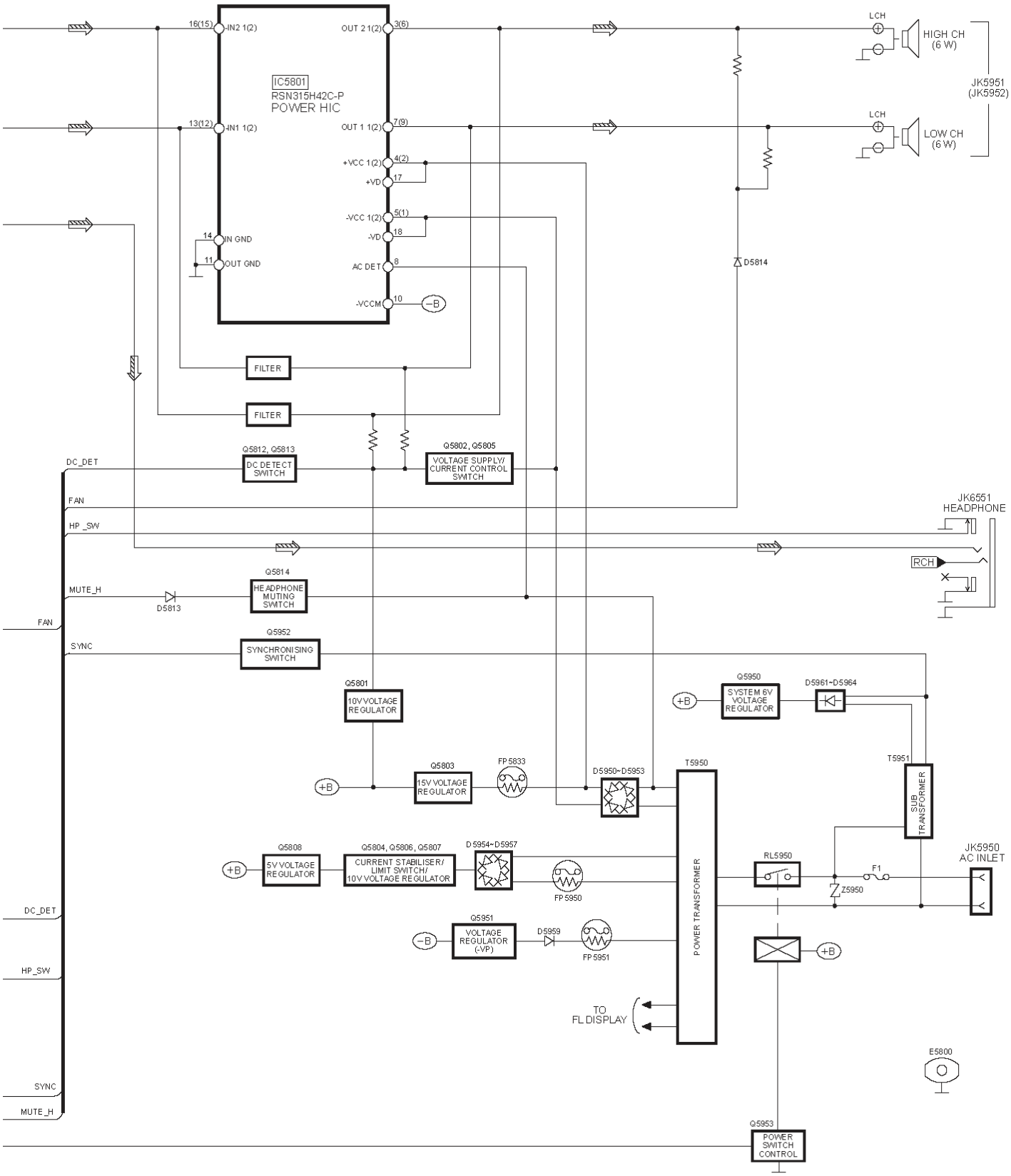

SIGNAL LINES

: MAIN SIGNAL LINE	: CD SIGNAL LINE	: AM SIGNAL LINE	: PLAYBACK SIGNAL LINE
: FM OSC SIGNAL LINE	: AM OSC SIGNAL LINE	: FM/AM SIGNAL LINE	: RECORD SIGNAL LINE
: FM SIGNAL LINE	: AUX SIGNAL LINE	: CD-DA (AUDIO/VIDEO) SIGNAL LINE	

( ) Indicates the Pin No. of Right Channel. NOTE : Signal Lines are applicable to the Left Channel only.

16 Voltage Measurement

Main P.C.B.

Ref No.	IC2601																			
MODE	1	2	3	4	5	6	7	8	9	10	11	12	13	14	15	16	17	18	19	20
REC	1.98	5.95	1.99	1.98	0	4.90	5.17	3.82	5.95	0	4.87	3.52	1.604	1.6	1.93	1.99	1.984	2.21	0	0.125
PLAY	1.98	5.95	1.99	1.97	0	4.74	5.15	3.82	5.95	0	4.86	3.52	1.59	1.595	1.93	1.989	1.981	2.20	0	0.125
STOP	1.99	5.96	1.99	1.98	0	4.92	5.17	3.83	5.95	0	4.87	3.52	1.59	1.6	1.93	1.99	1.981	2.20	0	0.125

Ref No.	IC2601																			
MODE	21	22	23	24																
REC	2.357	2.357	5.95	4.57																
PLAY	2.35	2.35	5.95	4.56																
STOP	2.35	2.35	5.95	4.57																

Ref No.	IC2602																			
MODE	1	2	3	4	5	6	7	8	9	10	11	12	13	14	15	16	17	18	19	20
REC	2.59	0	0	0	5.18	4.95	0	4.63	0	14.94	0	0	2.59	0	5.19	0	0	14.94	0	2.59
PLAY	2.57	0	0	0	5.16	4.86	0	4.55	0	15.18	0	0	2.59	5.19	5.19	0	0	15.23	0	2.58
STOP	2.57	0	0	0	5.16	4.86	0	4.55	0	15.18	0	0	2.59	5.19	5.19	0	0	15.23	0	2.58

Ref No.	IC2801																			
MODE	1	2	3	4	5	6	7	8	9	10	11	12	13	14	15	16	17	18	19	20
REC	0	0	0	0	0	0	0	0	0	0.669	0.69	5.25	2.68	0	2.6	0	0	5.25	3.1	5.20
PLAY	0	0	0	0	0	0	0	0	0	0.67	0.68	5.25	2.68	0	2.6	0	0	5.224	3.1	5.20
STOP	0	0	0	0	0	0	0	0	0	0.67	0.67	5.25	2.68	0	2.62	0	0	5.224	3.1	5.20

Ref No.	IC2801																			
MODE	21	22	23	24	25	26	27	28	29	30	31	32	33	34	35	36	37	38	39	40
REC	4.95	0	0	0	0	0	5.28	0	0	0	0	0	0	0	0	0	0	0	0	0
PLAY	4.95	0	0	0	0	0	5.26	0	0	0	0	0	0	0	0	0	0	0	0	0
STOP	4.95	0	0	0	0	0	5.26	0	0	0	0	0	0	0	0	0	0	5.224	0	0

Ref No.	IC2801																			
MODE	41	42	43	44	45	46	47	48	49	50	51	52	53	54	55	56	57	58	59	60
REC	0	0	0	0	0	5.18	5.16	0	0	0	0	0	4.79	0	0	0	0	0	5.25	0
PLAY	0	0	0	0	0	5.17	5.15	0	0	0	0	0	4.78	0	0	0	0	0	5.25	0
STOP	0	0	0	0	0	5.18	5.15	0	0	0	0	0	4.79	0	0	0	0	0	5.25	0

Ref No.	IC2801																			
MODE	61	62	63	64	65	66	67	68	69	70	71	72	73	74	75	76	77	78	79	80
REC	0	5.25	0	0	0	0	0	5.25	0	0	0	3.0	0.3	0	0	0	5.25	3.0	0	0.5
PLAY	0	5.25	0	0	0	0	0	5.25	0	0	0	3.0	0.31	0	0	0	5.25	3.0	0	0.5
STOP	0	5.25	0	0	0	0	0	5.25	0	0	0	3.1	0.3	0	0	0	5.25	3.1	0	0.5

Ref No.	IC2801																			
MODE	81	82	83	84	85	86	87	88	89	90	91	92	93	94	95	96	97	98	99	100
REC	4.91	0	0	5.24	5.25	0	0	0	0	3.65	5.25	1.24	5.25	5.23	4.38	0.59	0	5.25	5.25	5.18
PLAY	4.91	0	0	5.25	5.25	0	0	0	0	3.65	5.22	1.24	5.25	5.23	4.38	0.58	0	5.25	5.26	5.18
STOP	4.92	0	0	5.25	5.25	0	0	0	0	3.65	5.24	1.24	5.25	5.23	4.38	0.59	0	5.25	5.25	5.19

Ref No.	IC2803																			
MODE	1	2	3	4	5	6	7	8	9	10	11	12	13	14	15	16	17	18	19	20
REC	4.52	4.60	4.52	4.60	4.50	4.49	4.49	4.49	4.50	4.50	4.49	4.49	4.49	4.45	4.54	0	5.17	0	9.03	3.38
PLAY	4.52	4.60	4.50	4.61	4.52	4.50	4.50	4.50	4.50	4.50	4.50	4.50	4.50	4.50	4.54	0	5.20	0	9.02	3.38
STOP	0	5.27	0	0	0	0	0	0												

Ref No.	IC2803																			
MODE	21	22	23	24	25	26	27	28	29	30	31	32								
REC	4.54	4.54	4.54	4.52	4.52	4.51	4.54	4.53	4.54	4.53	4.54	4.55								
PLAY	4.54	4.55	4.55	4.53	4.52	4.51	4.54	4.53	4.54	4.54	4.54	4.55								
STOP	4.54	4.55	4.55	4.53	4.52	4.57	4.54	4.53	4.54	4.54	4.54	4.55								

Ref No.	IC2805																			
MODE	1	2	3	4	5	6	7	8												
REC	0	0	0	-8.89	0	0	0	9.03												
PLAY	0	0	0	-8.90	0	0	0	9.03												
STOP	0	0	0	-8.90	0	0	0	9.05												

Ref No.	IC2806																			
MODE	1	2	3	4	5	6	7	8												
REC	0	0	0	0	0	0	0	9.05												
PLAY	0	0	0	0	0	0	0	9.04												
STOP	0	0	0	0	0	0	0	9.05												

Main P.C.B.

Ref No.	Q2601				Q2606				Q2701				Q2901				Q2902			
MODE	E/S	C/D	B/G		E/S	C/D	B/G		E/S	C/D	B/G		E/S	C/D	B/G		E/S	C/D	B/G	
REC	0	0	0		14.79	0	14.79		-8.92	-8.84	-8.18		5.54	3.28	6.5		2.98	5.56	2.4	
PLAY	0	0	0		15.17	0	15.20		-8.92	-8.81	-8.17		5.60	3.29	6.24		3.02	5.58	2.48	
STOP	0	0	0		15.26	0	15.22		-8.96	4.78	-8.95		7.08	3.3	7.65		3.04	7.08	2.5	

Main P.C.B.

Ref No.	Q2936																			
MODE	E/S	C/D	B/G																	
PLAY	9.92	0	9.94																	
PLAY	9.95	0	9.95																	
STOP	9.99	0	9.99																	

Transformer P.C.B.

Ref No.	Q5950				Q5951				Q5952				Q5953							
MODE	E/S	C/D	B/G		E/S	C/D	B/G		E/S	C/D	B/G		E/S	C/D	B/G					
REC	5.98	10.12	6.60		-25.86	-29.20	-26.50		-8.92	-8.84	-8.18		0	0.13	0.8					
PLAY	5.99	10.30	6.59		-25.85	-29.22	-26.50		-8.92	-8.81	-8.17		0	0.13	0.8					
STOP	5.99	10.25	6.59		-25.85	-29.22	-26.50		-8.96	4.78	-8.95		0	0.13	0.8					

17 Schematic Diagram

(All schematic diagrams may be modified at any time with the development of the new technology)

Note:

- **SW1**
: Push switch
- **SW2**
: Push switch
- **SW3**
: Open switch
- **SW4**
: CD switch
- **SW5**
: Load switch
- **S951**
: Mode switch
- **S952**
: Half switch
- **S971**
: Mode switch
- **S972**
: Half switch
- **S975**
: Recinh_F switch
- **S6101**
: Open/ Close switch
- **S6102**
: CD 1 switch
- **S6103**
: CD 2 switch
- **S6104**
: CD 3 switch
- **S6105**
: CD 4 switch
- **S6106**
: CD 5 switch
- **S6201**
: Rew switch
- **S6202**
: Tuner switch
- **S6203**
: CD switch
- **S6204**
: FF switch
- **S6205**
: Stop switch
- **S6206**
: Deck 1/2 switch
- **S6207**
: Deck 2 Open switch
- **S6208**
: TAPE switch
- **S6209**
: AUX switch
- **S6210**
: Deck 1 Open switch
- **S6301**
: Power switch
- **S6303**
: SSEQ switch
- **S6304**
: REC switch
- **S6305**
: Demo/Display switch
- **S7201**
: Rest switch
- **VR6491**

· The voltage value and waveforms are the reference voltage of this unit measured by DC electronic voltmeter (high impedance) and oscilloscope on the basis of chassis. Accordingly, there may arise some error in voltage values and waveformsdependingupon the internal impedance of the tester or the measuring unit.

No mark: Playback << >> : Rec < > : FM (( )) : CD

· **Importance safety notice :**

Components identified by mark have special characteristics important for safety. Furthermore, special parts which have purposes of fire-retardant (resistors), high-quality sound (capacitors), low-noise (resistors), etc. are used. Whenreplacing any of components, be sure to use only manufacturer´s specified parts shown in the parts list.

Caution !

IC, LSI and VLSI are sensitive to static electricity. Secondary trouble can be prevented by taking care during repair.

· Cover the parts boxes made of plastics with aluminium foil.
· Put a conductive mat on the work table.
· Ground the soldering iron.
· Do not touch the pins of IC, LSI or VLSI with fingers directly.

CAUTION : FOR CONTINUED PROTECTION AGAINST FIRE HAZARD, REPLACE ONLY WITH SAME TYPE **F1, 4A, 125V FUSE.**

RISK OF FIRE-REPLACE FUSE AS MARKED.

FUSE CAUTION

These symbols located near the fuse indicates that the fuse used is a fast operating type. For continued protection against fire harzard, replace with the same type fuse. For fuse rating, refer to the marking adjacent to the symbol.

Ce symbole indique que le fusible utilisé est à rapide. Pour une protection permanente, n' utiliser que des fusibles de même type. Ce dernier est indiqué là qù le présent symbole est apposé.

17.1 (A) CD Servo Circuit

SCHEMATIC DIAGRAM - 1

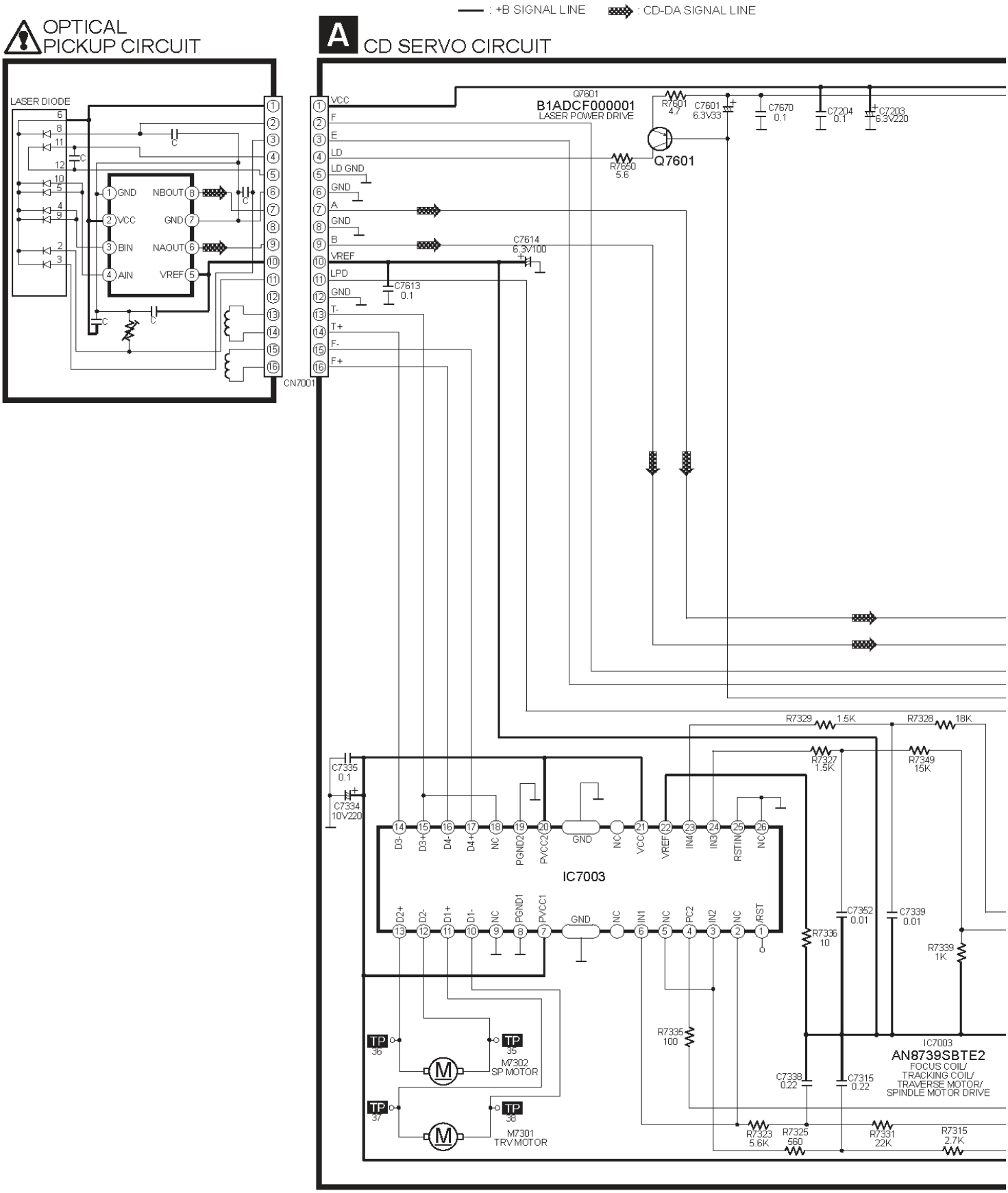

SCHEMATIC DIAGRAM - 2

— : +B SIGNAL LINE : CD-DA SIGNAL LINE : CD SIGNAL LINE

A CD SERVO CIRCUIT

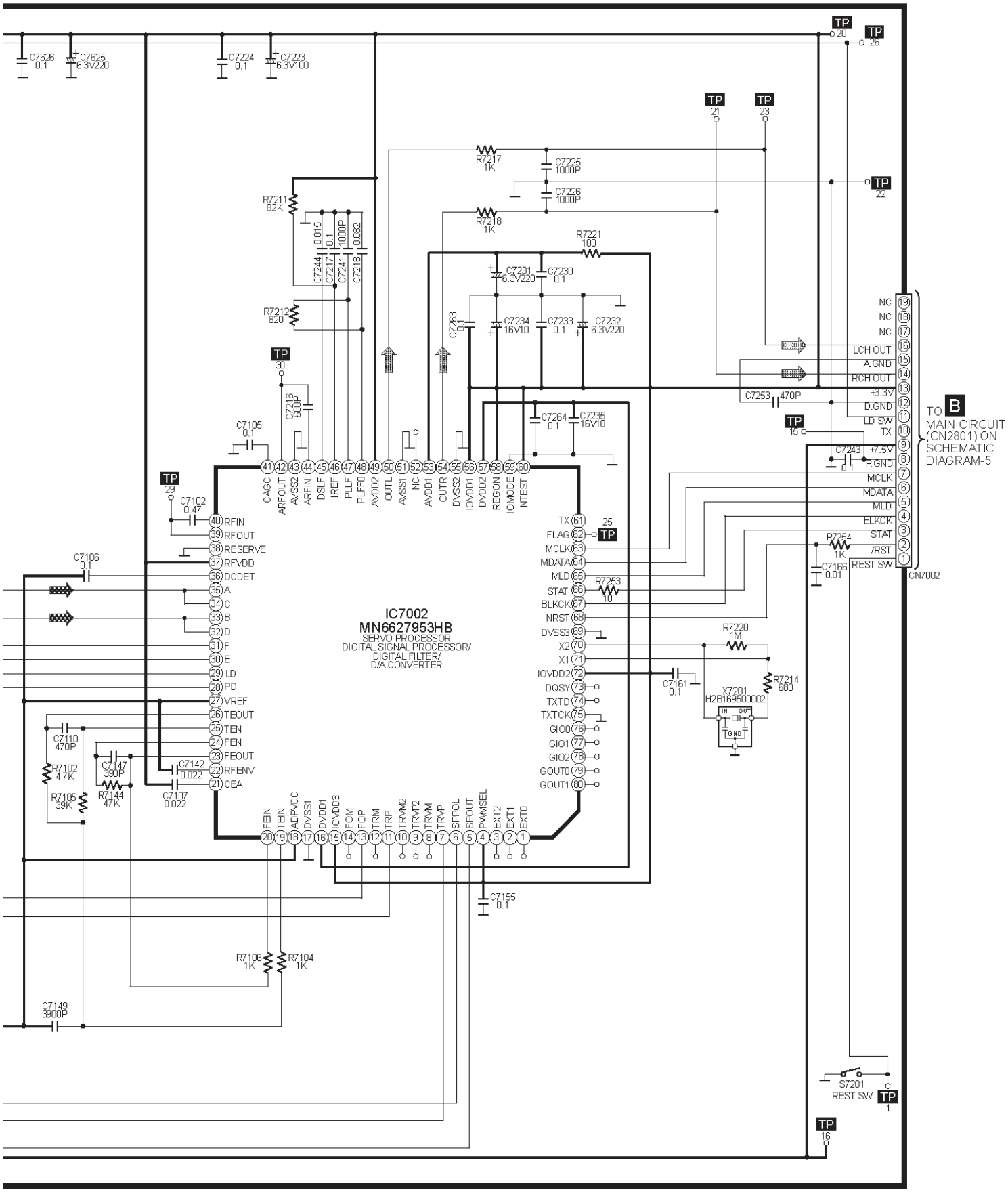

SCHEMATIC DIAGRAM - 3

: +B SIGNAL LINE
: FM/AM SIGNAL LINE
: FM SIGNAL LINE
: FM OSC SIGNAL LINE
: AM SIGNAL LINE
: AM OSC SIGNAL LINE

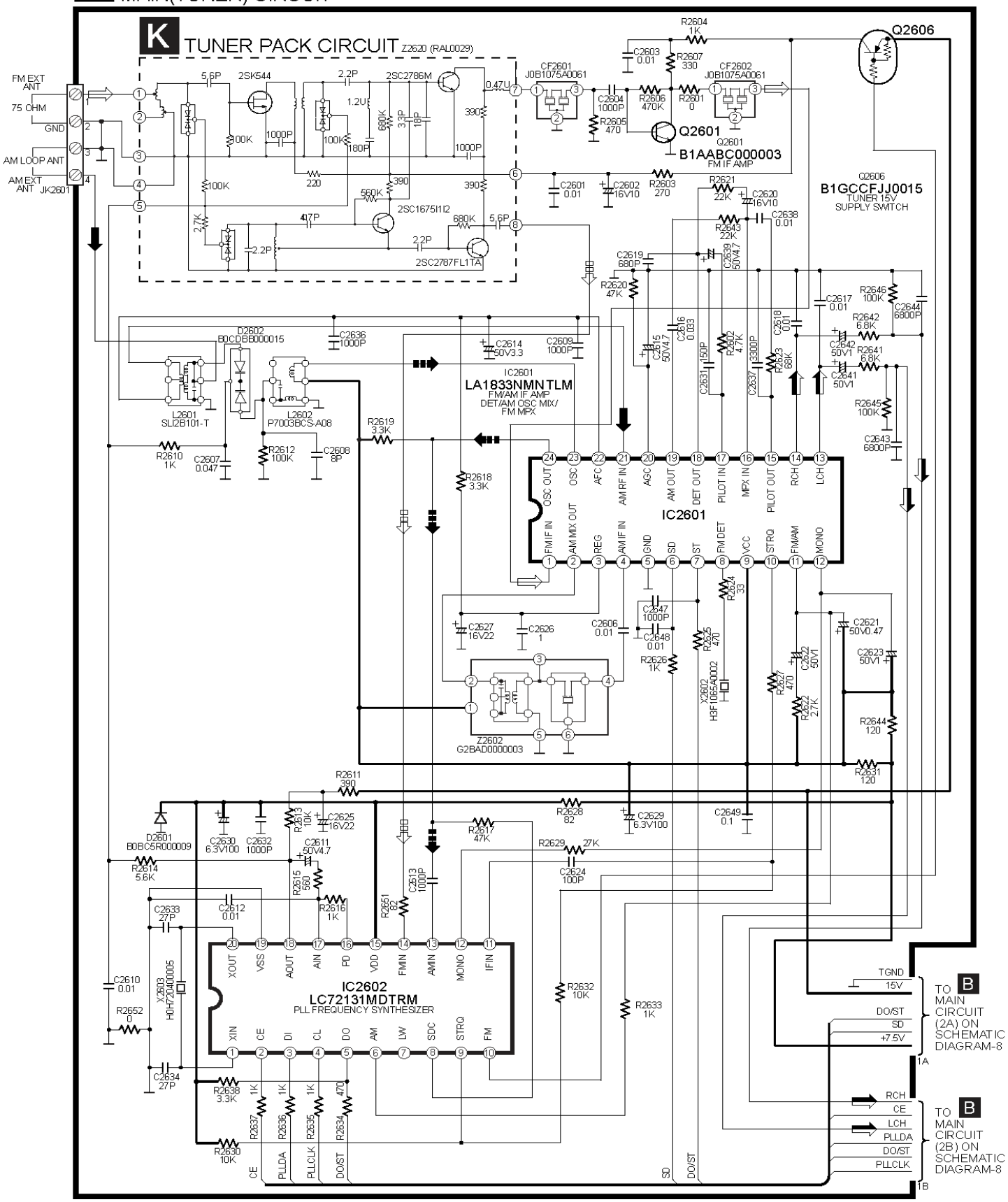

SCHEMATIC DIAGRAM - 4

: +B SIGNAL LINE
: -B SIGNAL LINE
: PLAYBACK SIGNAL LINE
: RECORD SIGNAL LINE
: AUX SIGNAL LINE
: MAIN SIGNAL LINE

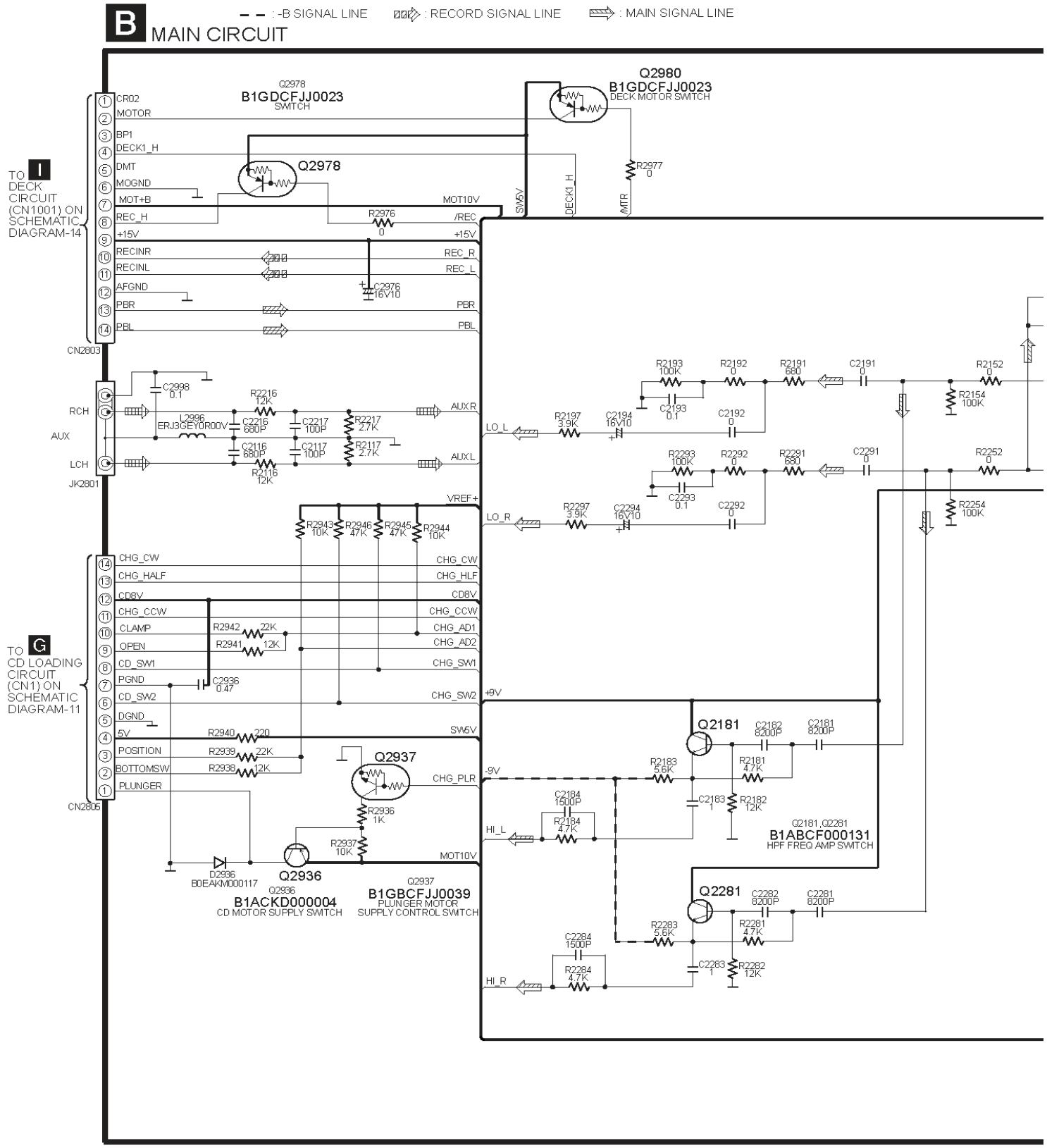

SCHEMATIC DIAGRAM - 5

—— : +B SIGNAL LINE
- - : -B SIGNAL LINE
: CD SIGNAL LINE
: MAIN SIGNAL LINE

B MAIN CIRCUIT

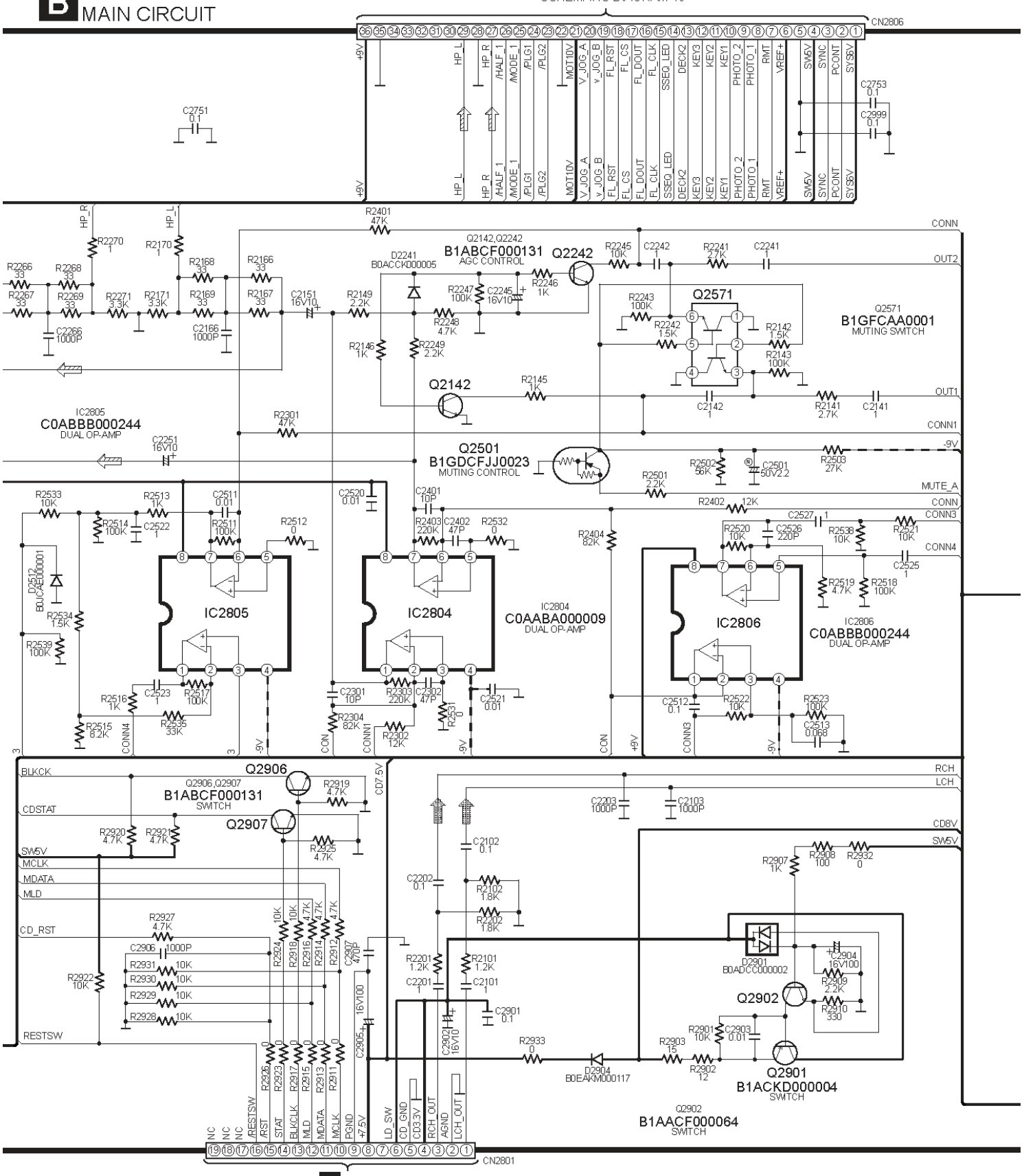

—— : +B SIGNAL LINE - - : -B SIGNAL LINE

B MAIN CIRCUIT

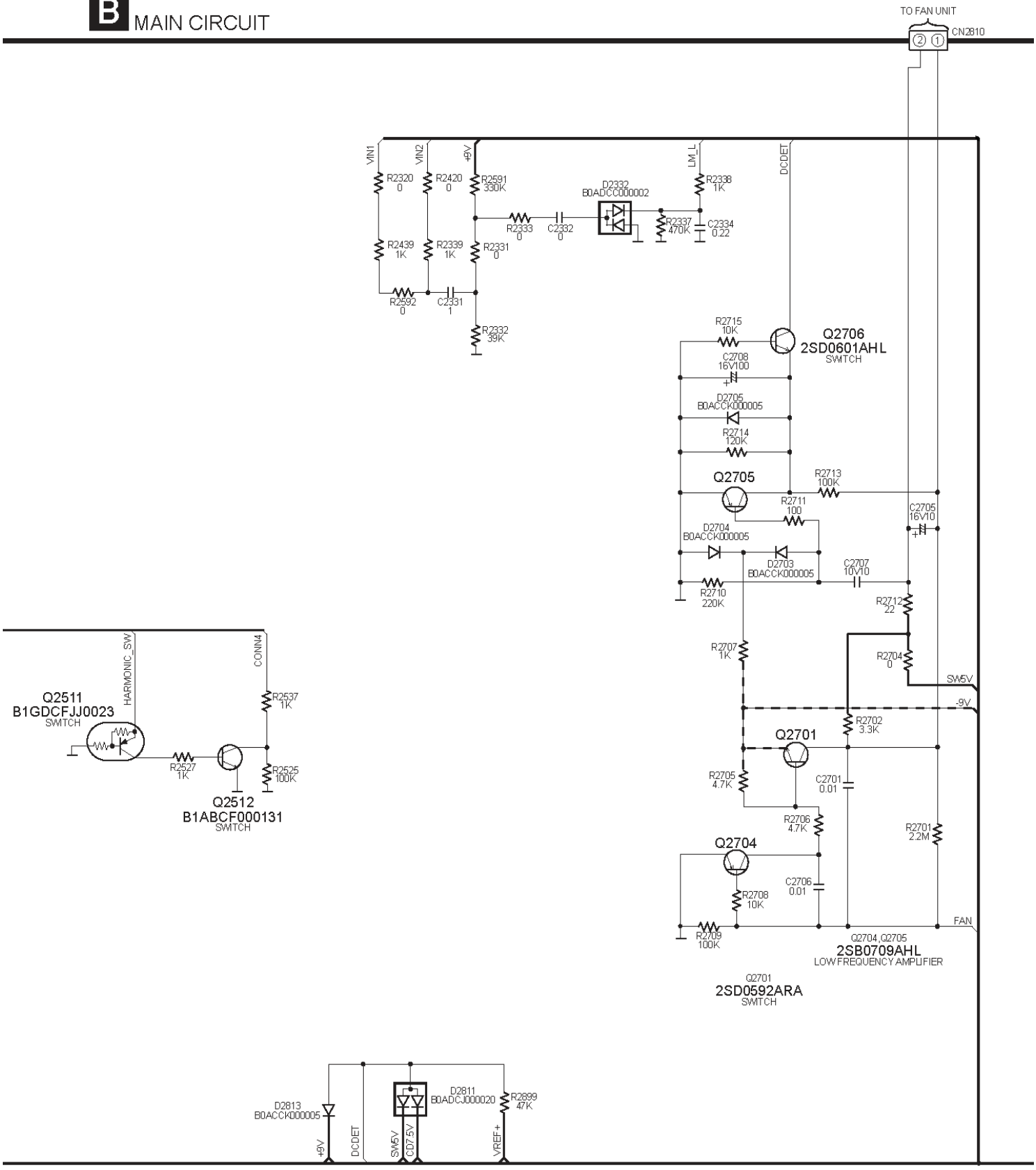

B MAIN CIRCUIT

— : +B SIGNAL LINE

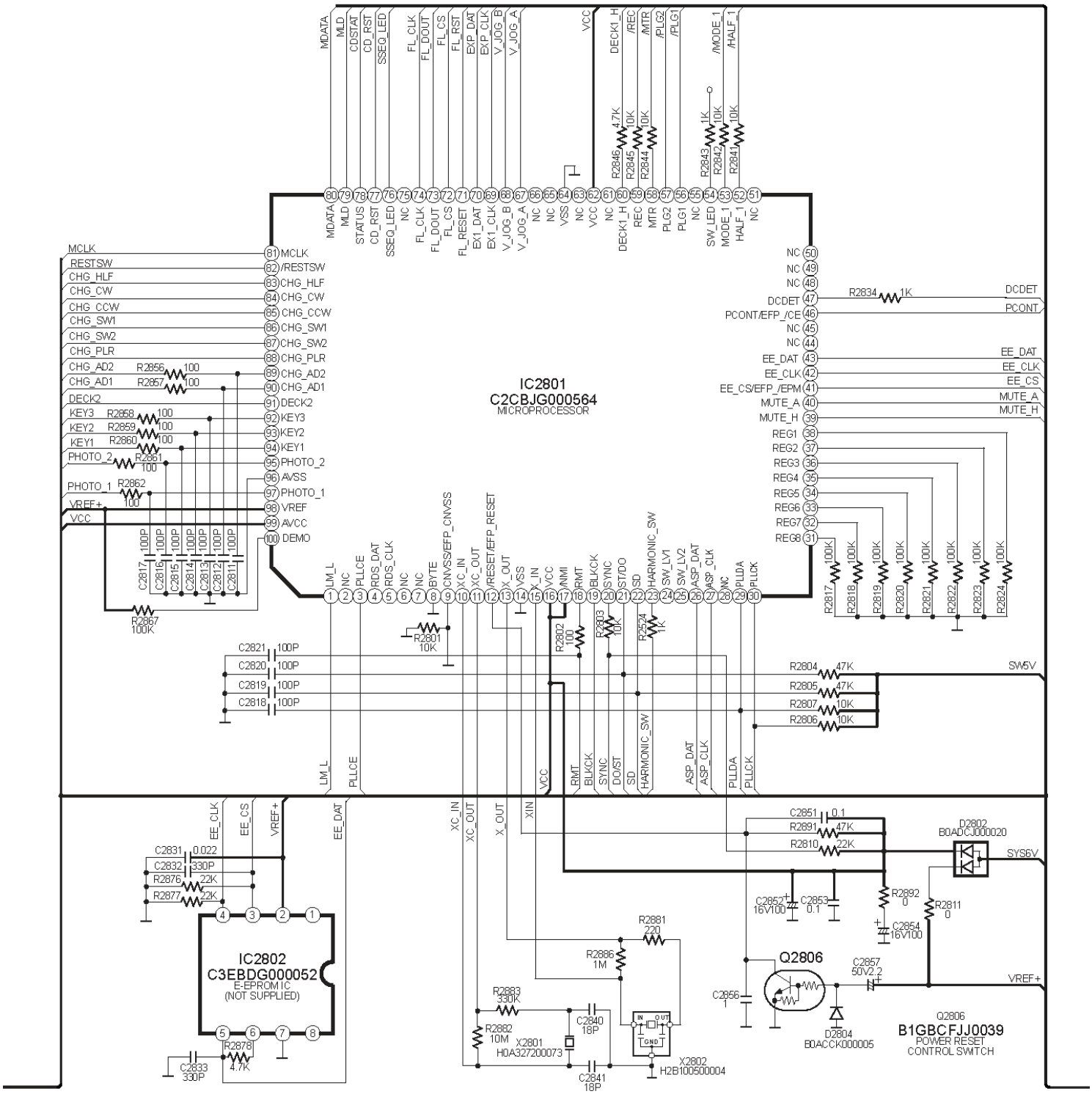

: +B SIGNAL LINE
: -B SIGNAL LINE
: AUX SIGNAL LINE
: CD SIGNAL LINE
: FM/AM SIGNAL LINE
: MAIN SIGNAL LINE
: PLAYBACK SIGNAL LINE
: RECORD SIGNAL LINE

B MAIN CIRCUIT

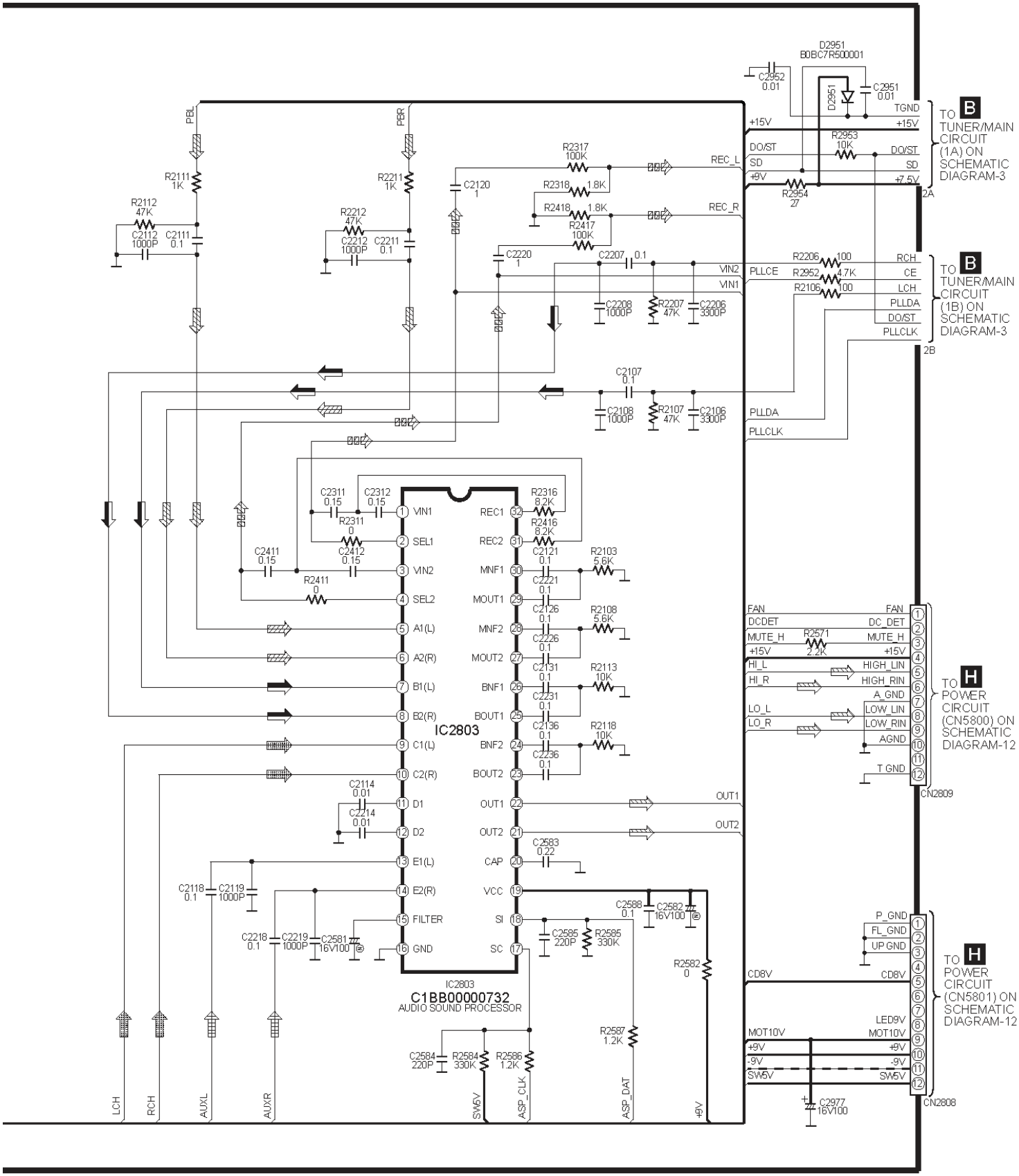

SCHEMATIC DIAGRAM - 9

C PANEL CIRCUIT

: +B SIGNAL LINE
: -B SIGNAL LINE
: MAIN SIGNAL LINE

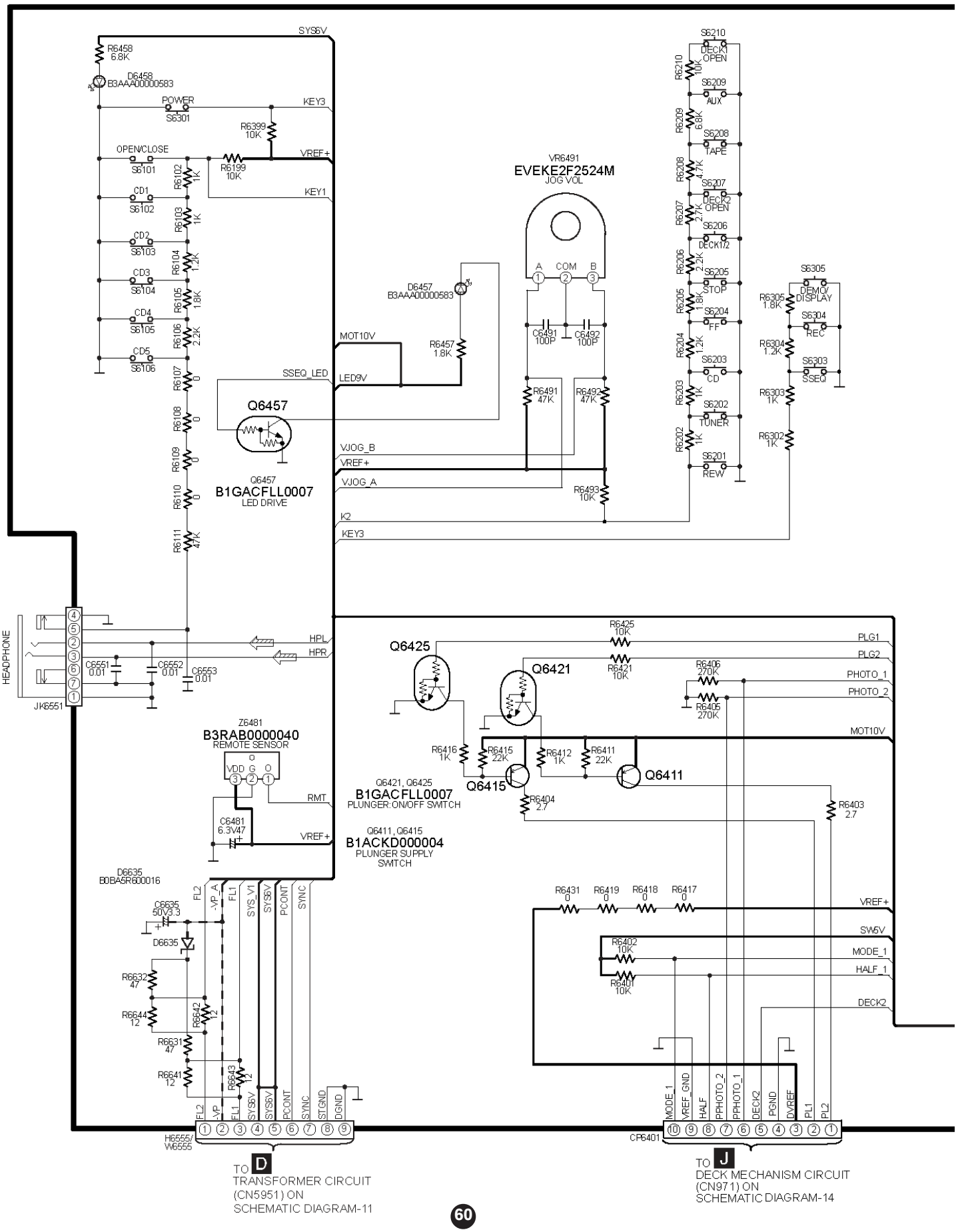

C PANEL CIRCUIT

—— : +B SIGNAL LINE – – : -B SIGNAL LINE ⇨ : MAIN SIGNAL LINE

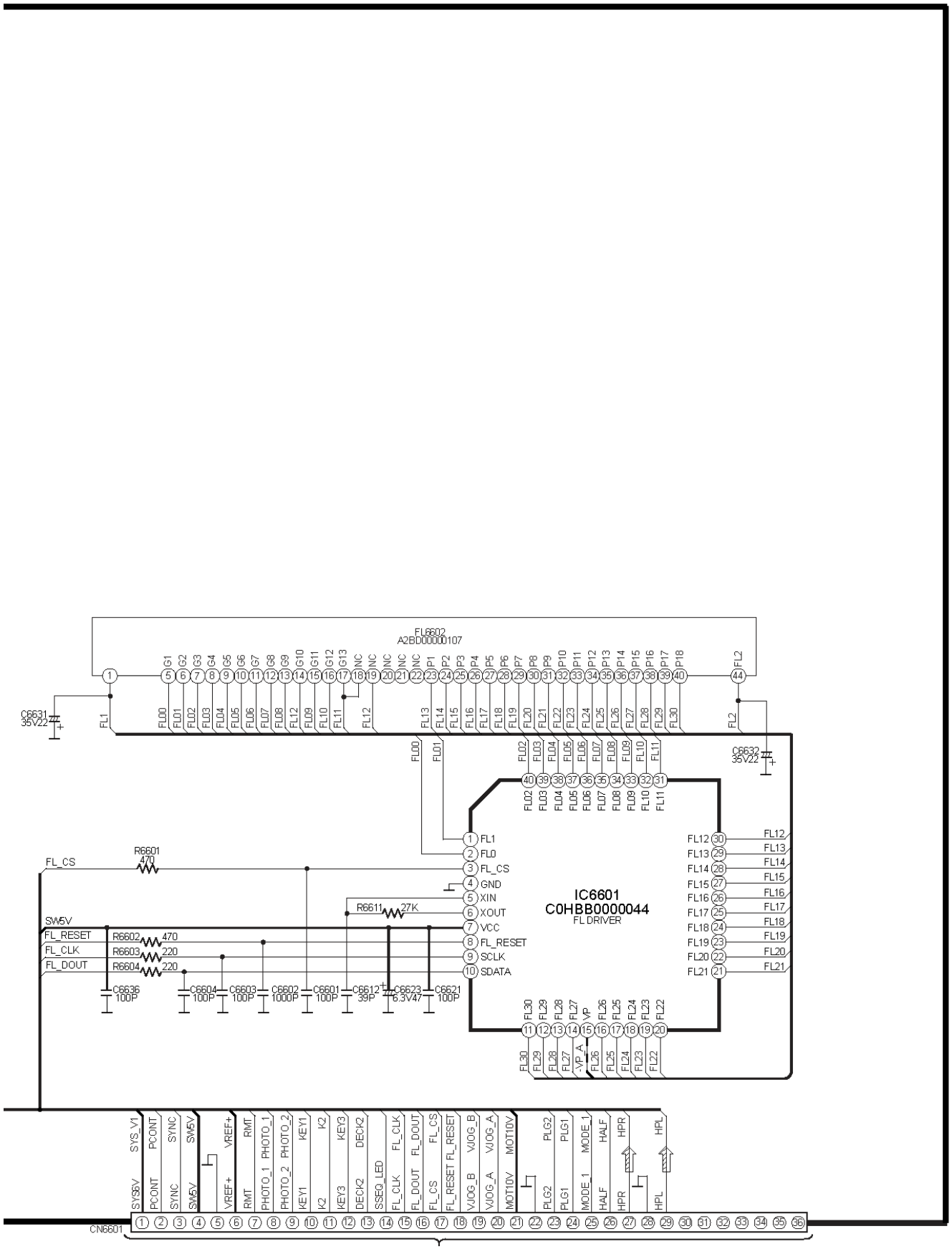

17.5 (D) Transformer Circuit, (E) CD Detect Circuit, (F) Spindle Position Circuit& (G) CD Loading Circuit

SCHEMATIC DIAGRAM - 11

—— : +B SIGNAL LINE - - : -B SIGNAL LINE

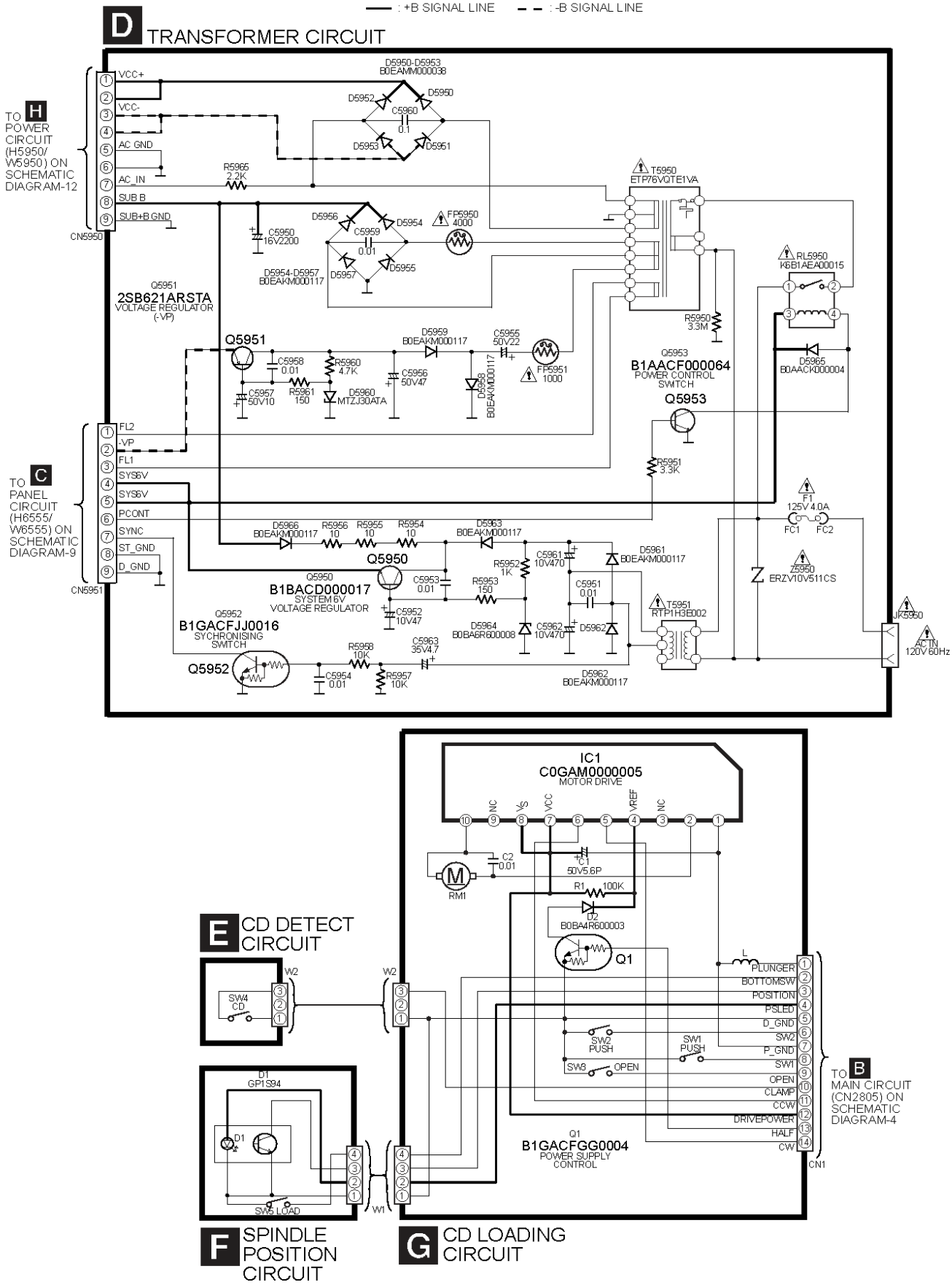

SCHEMATIC DIAGRAM - 11

—— : +B SIGNAL LINE – – : -B SIGNAL LINE

D TRANSFORMER CIRCUIT

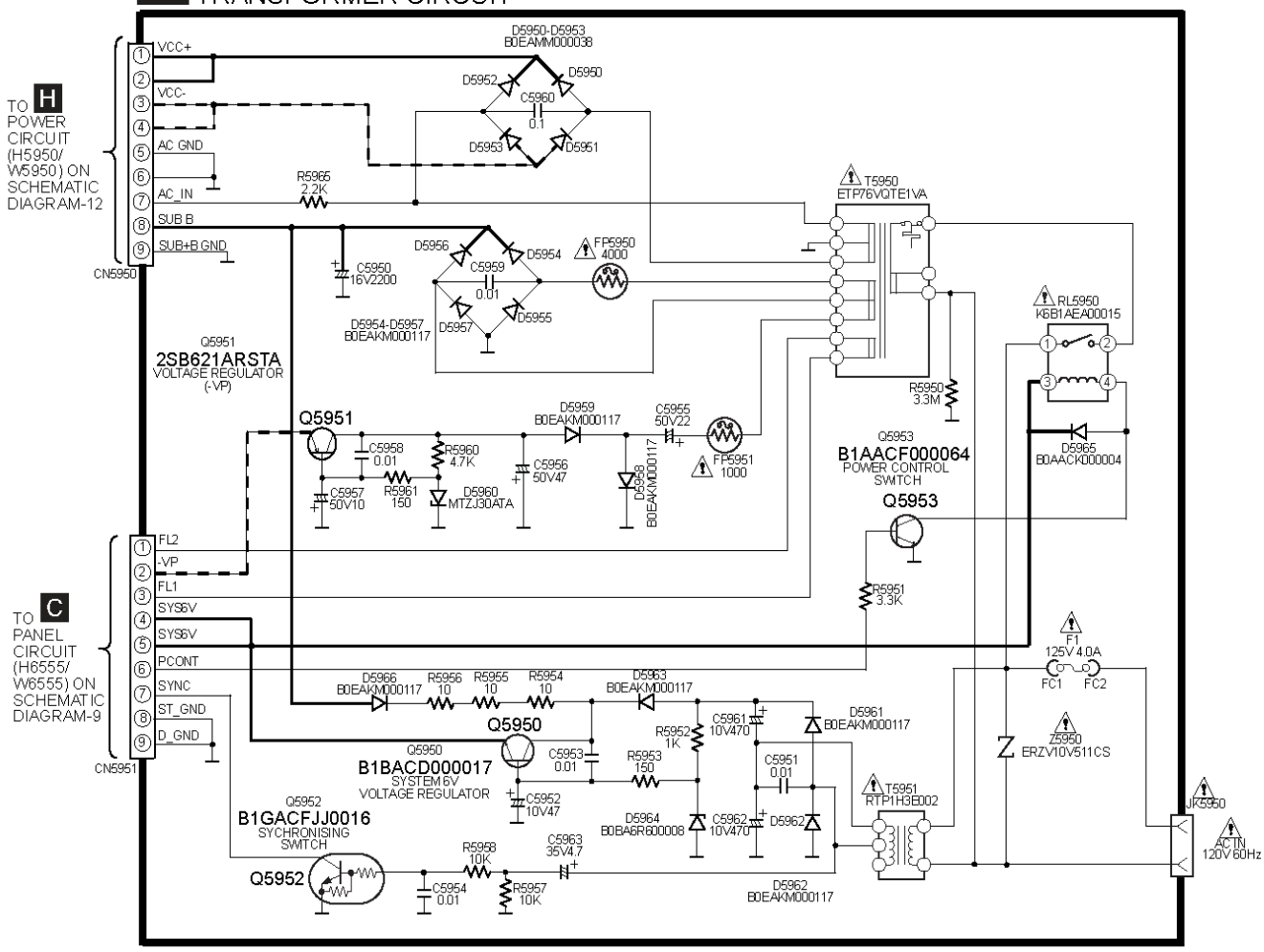

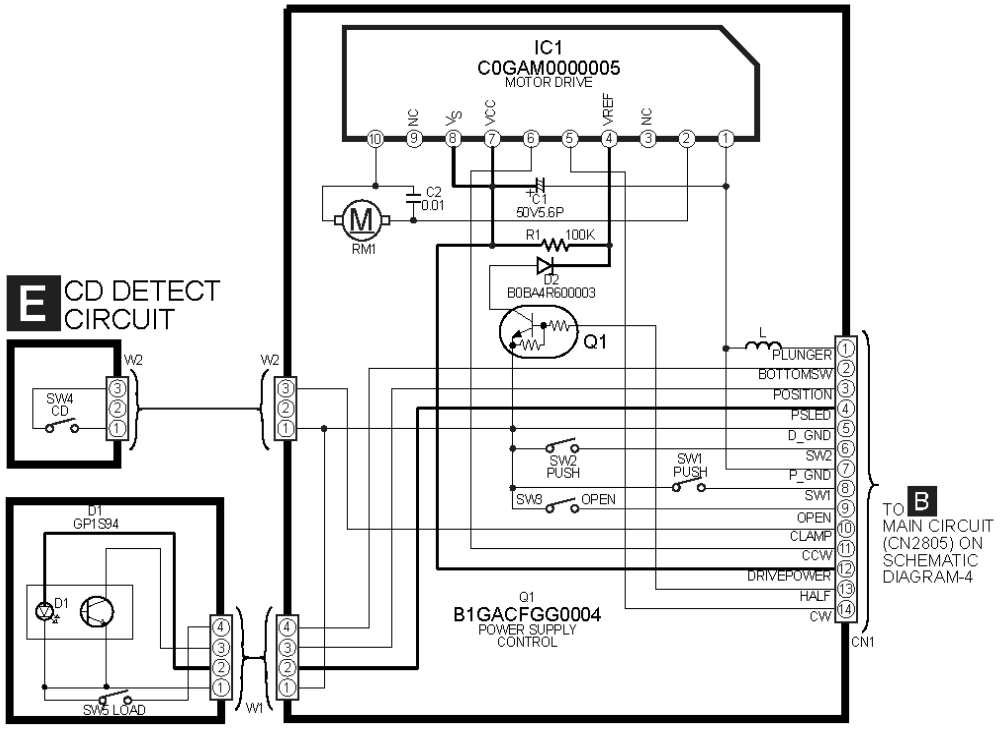

E CD DETECT CIRCUIT

F SPINDLE POSITION CIRCUIT

G CD LOADING CIRCUIT

SCHEMATIC DIAGRAM - 11

—— : +B SIGNAL LINE – – : -B SIGNAL LINE

D TRANSFORMER CIRCUIT

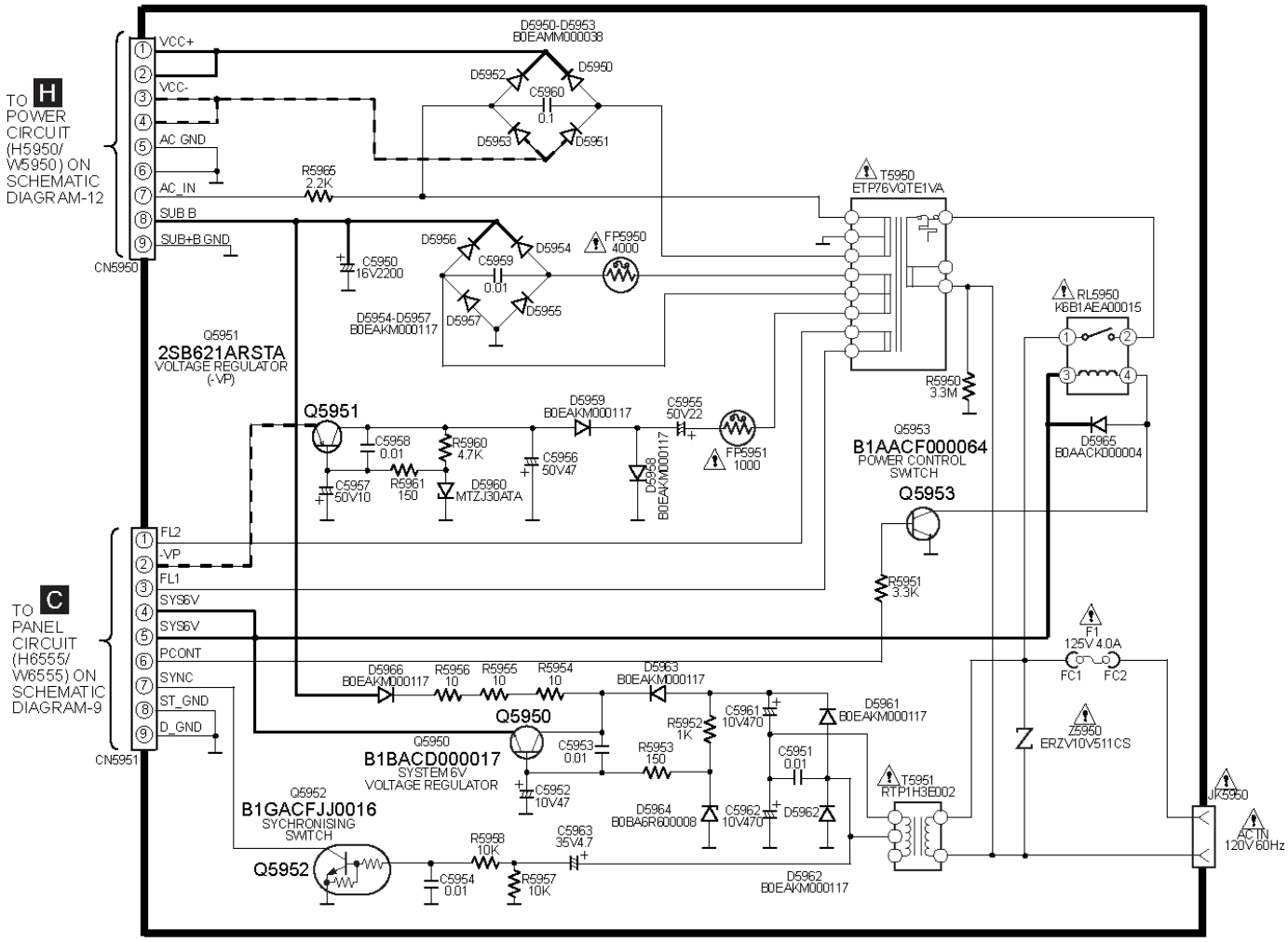

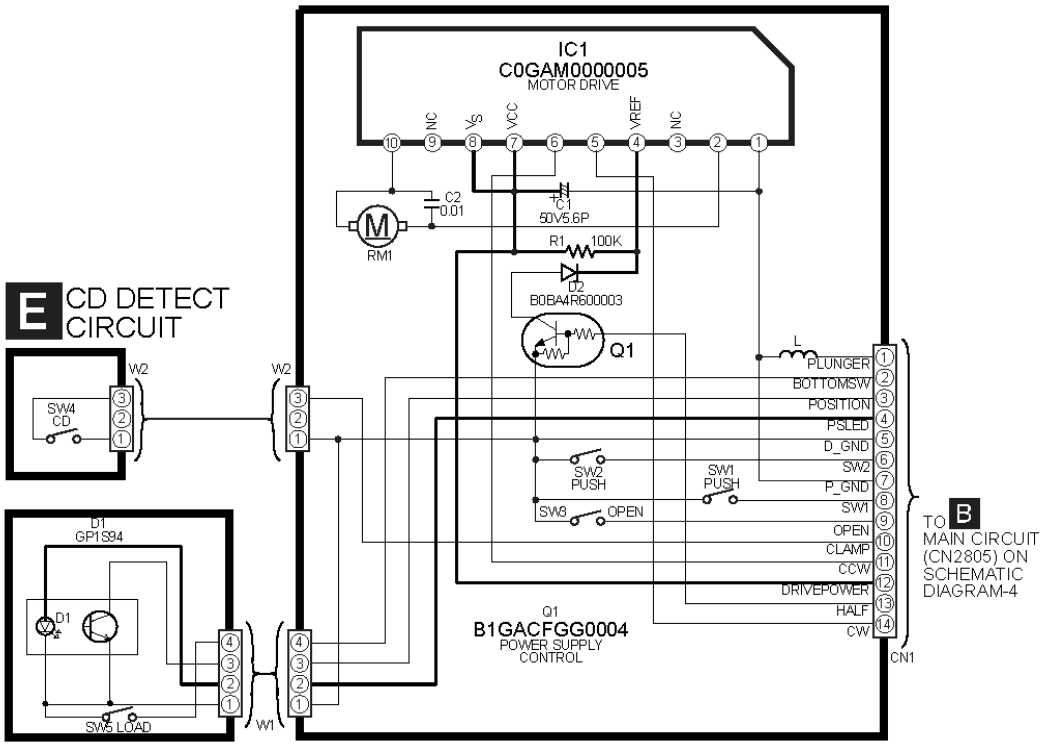

G CD LOADING CIRCUIT

SCHEMATIC DIAGRAM - 11

—— : +B SIGNAL LINE – – : -B SIGNAL LINE

D TRANSFORMER CIRCUIT

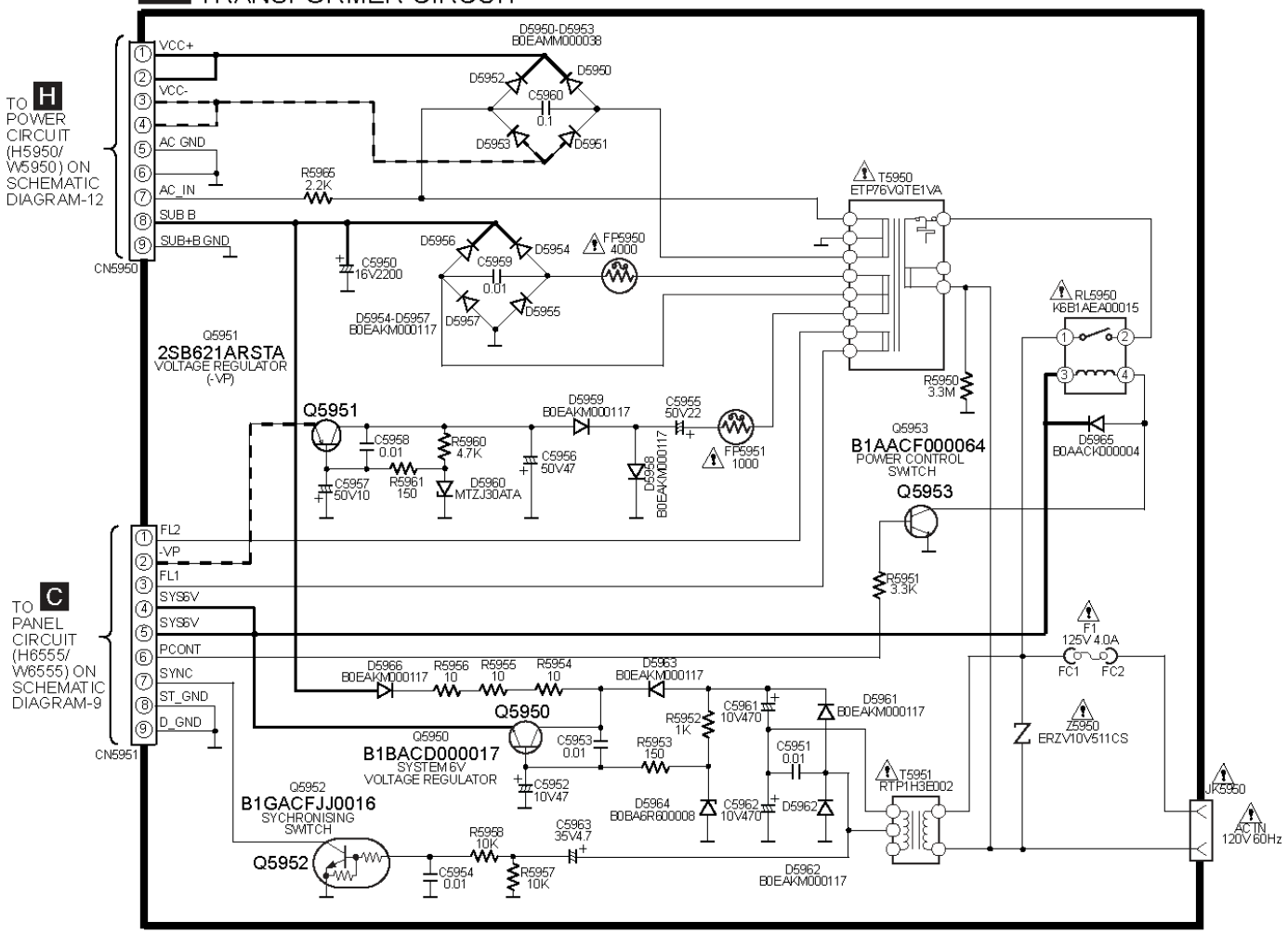

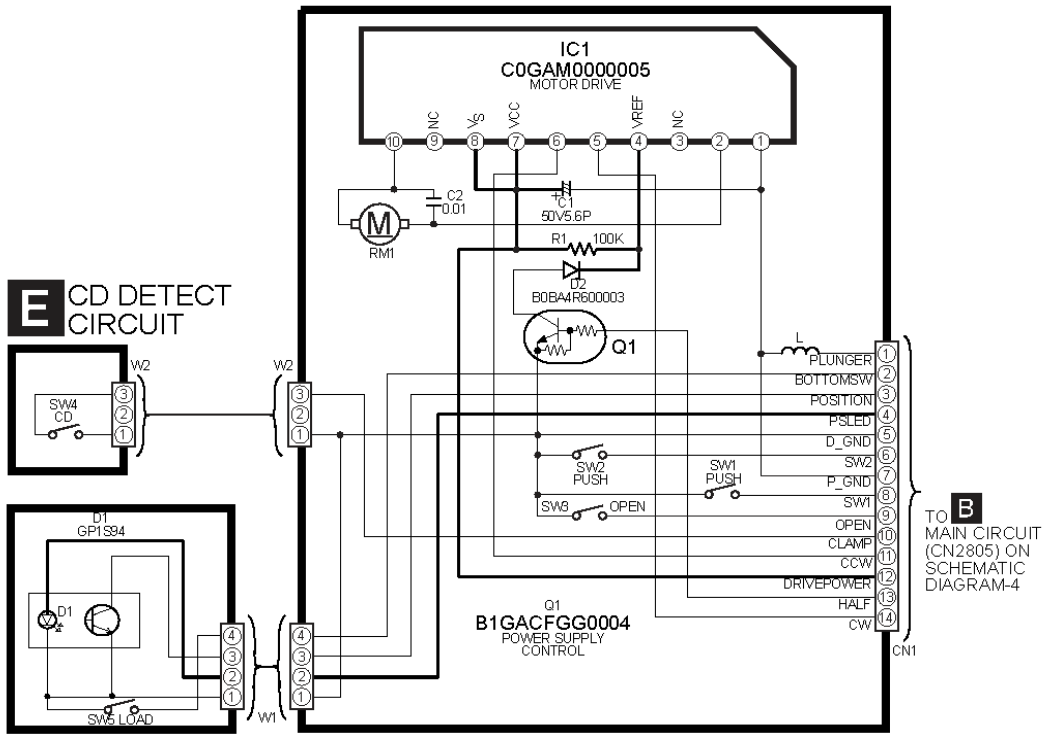

E CD DETECT CIRCUIT

F SPINDLE POSITION CIRCUIT

G CD LOADING CIRCUIT

SCHEMATIC DIAGRAM - 12

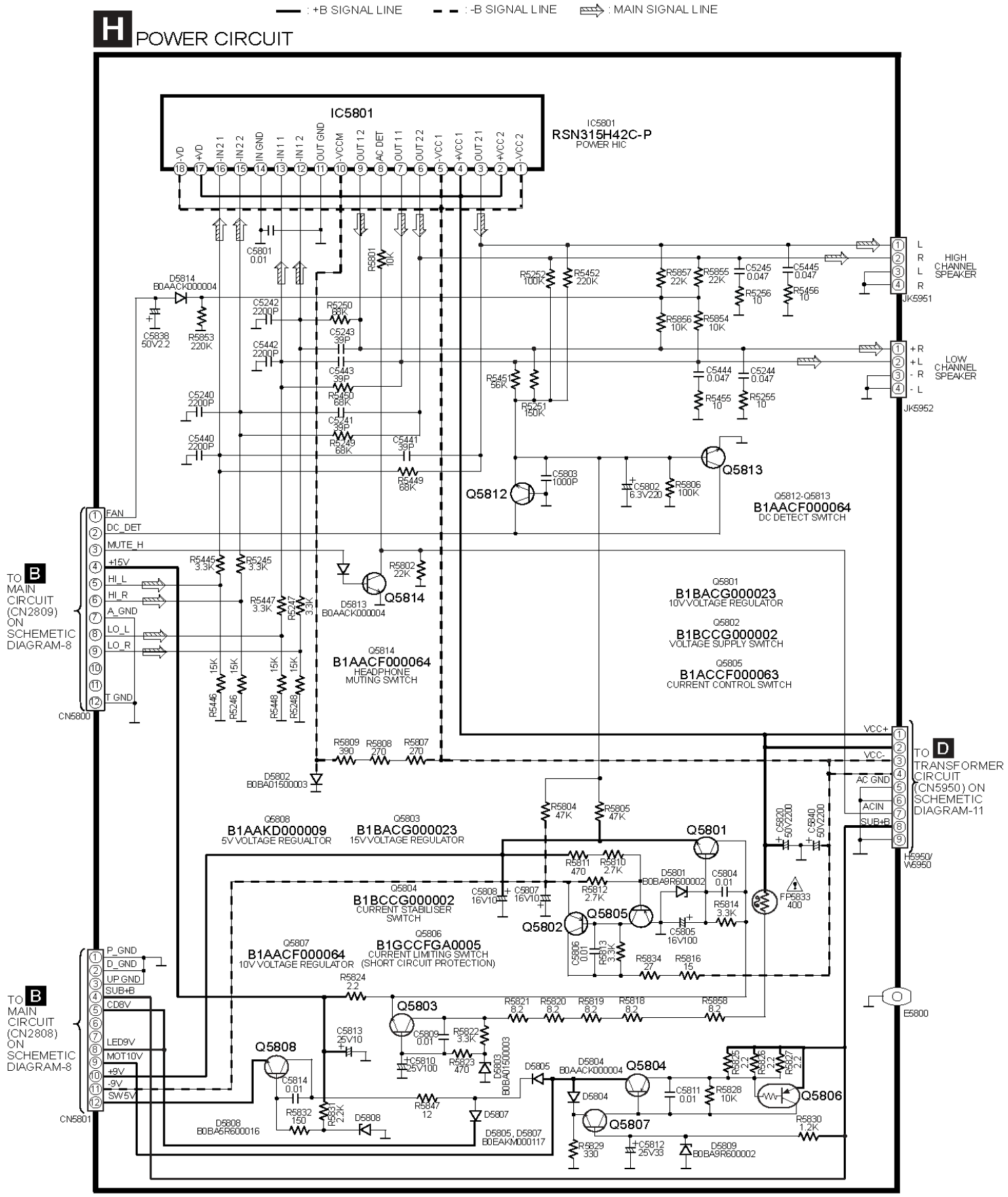

SCHEMATIC DIAGRAM -13

: +B SIGNAL LINE
: PLAYBACK SIGNAL LINE
: RECORD SIGNAL LINE

I DECK CIRCUIT

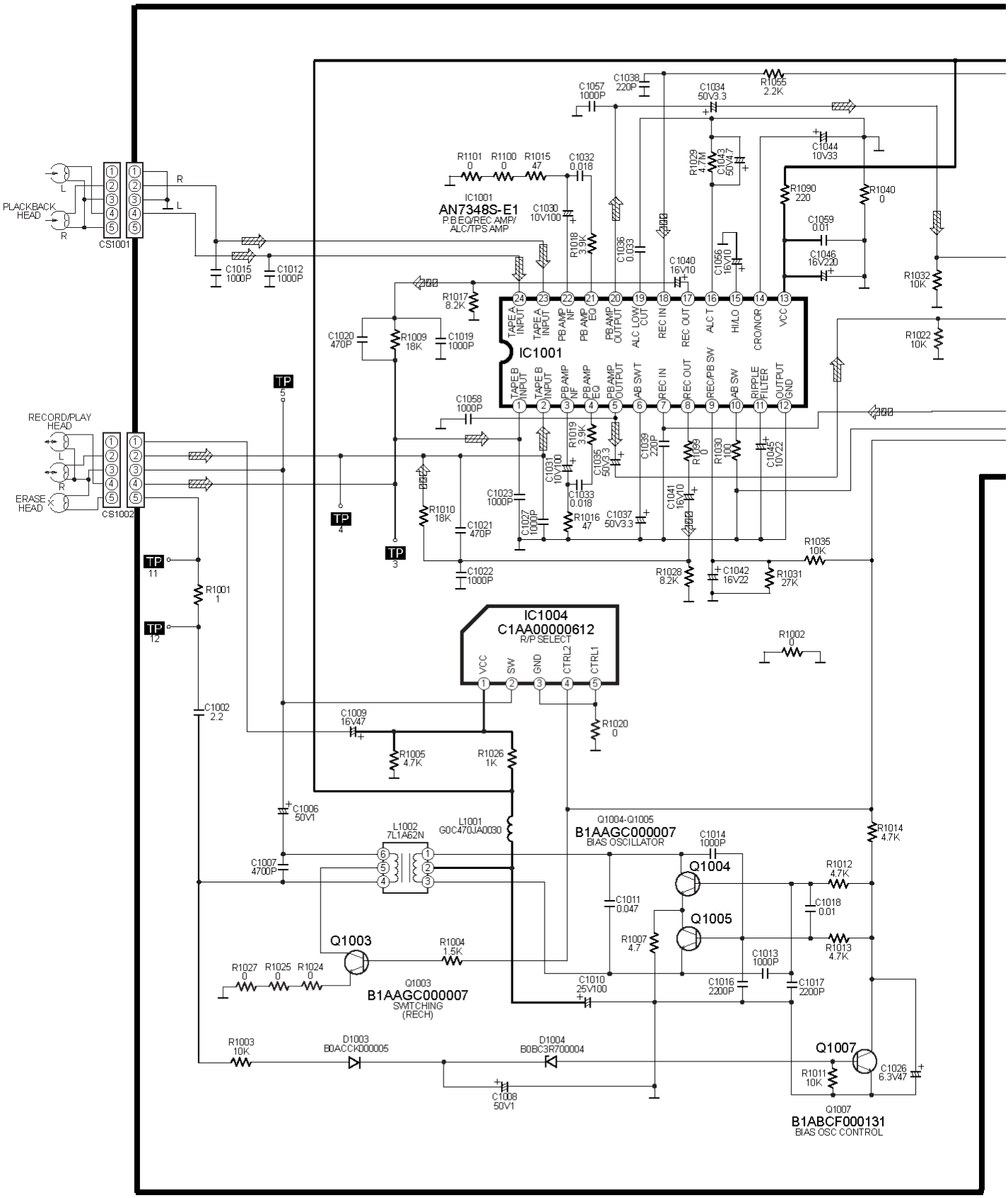

SCHEMATIC DIAGRAM - 14

: +B SIGNAL LINE
: PLAYBACK SIGNAL LINE
: RECORD SIGNAL LINE

I DECK CIRCUIT

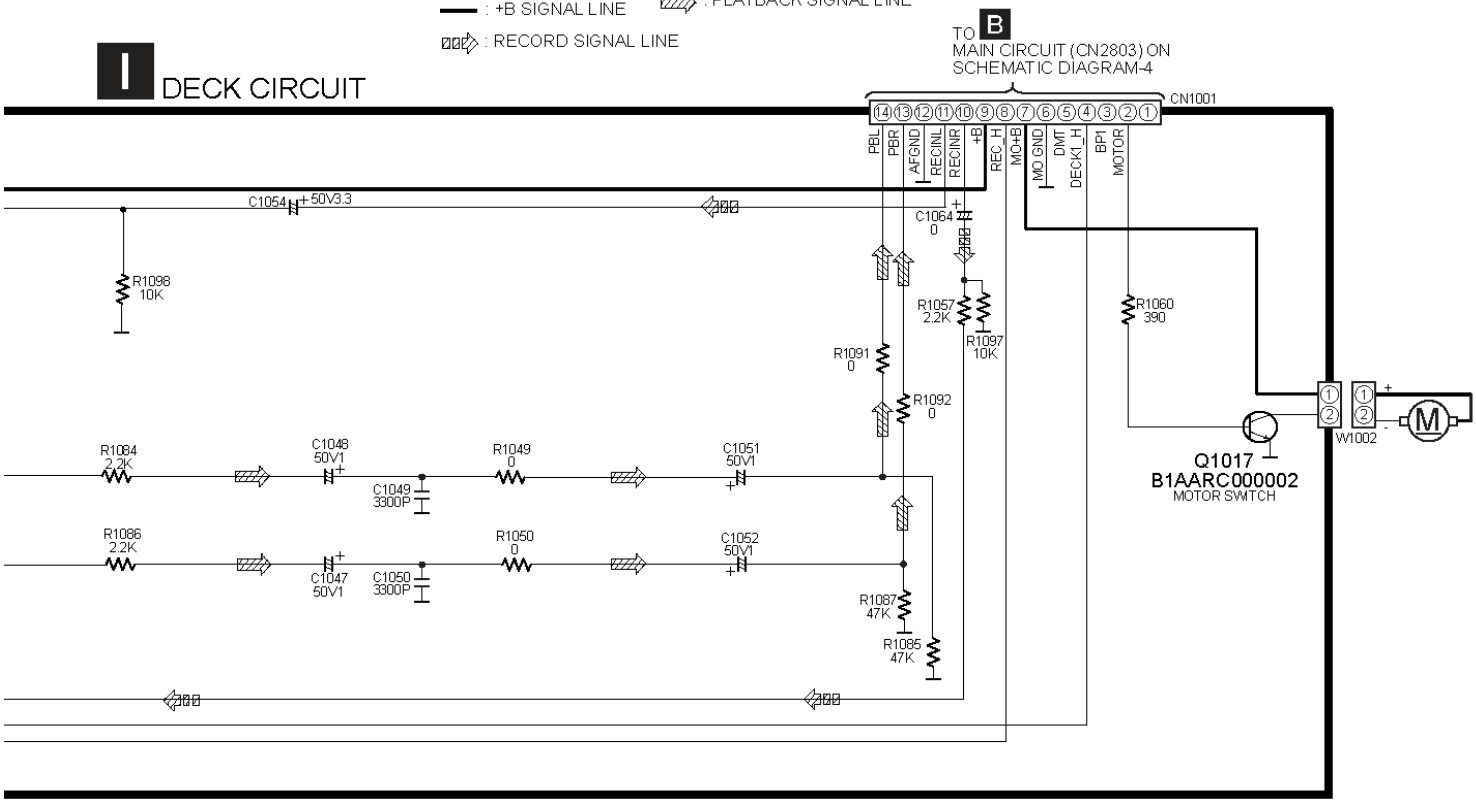

J DECK MECHANISM CIRCUIT

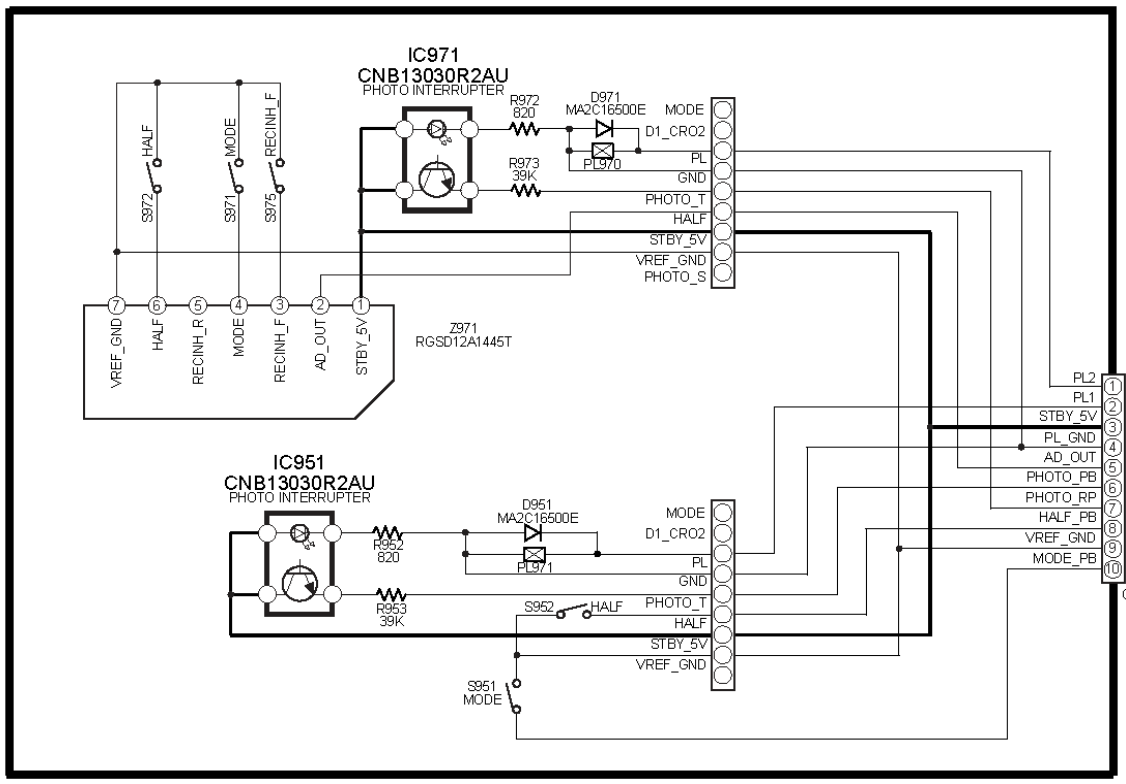

SCHEMATIC DIAGRAM -13

: +B SIGNAL LINE

: PLAYBACK SIGNAL LINE

: RECORD SIGNAL LINE

I DECK CIRCUIT

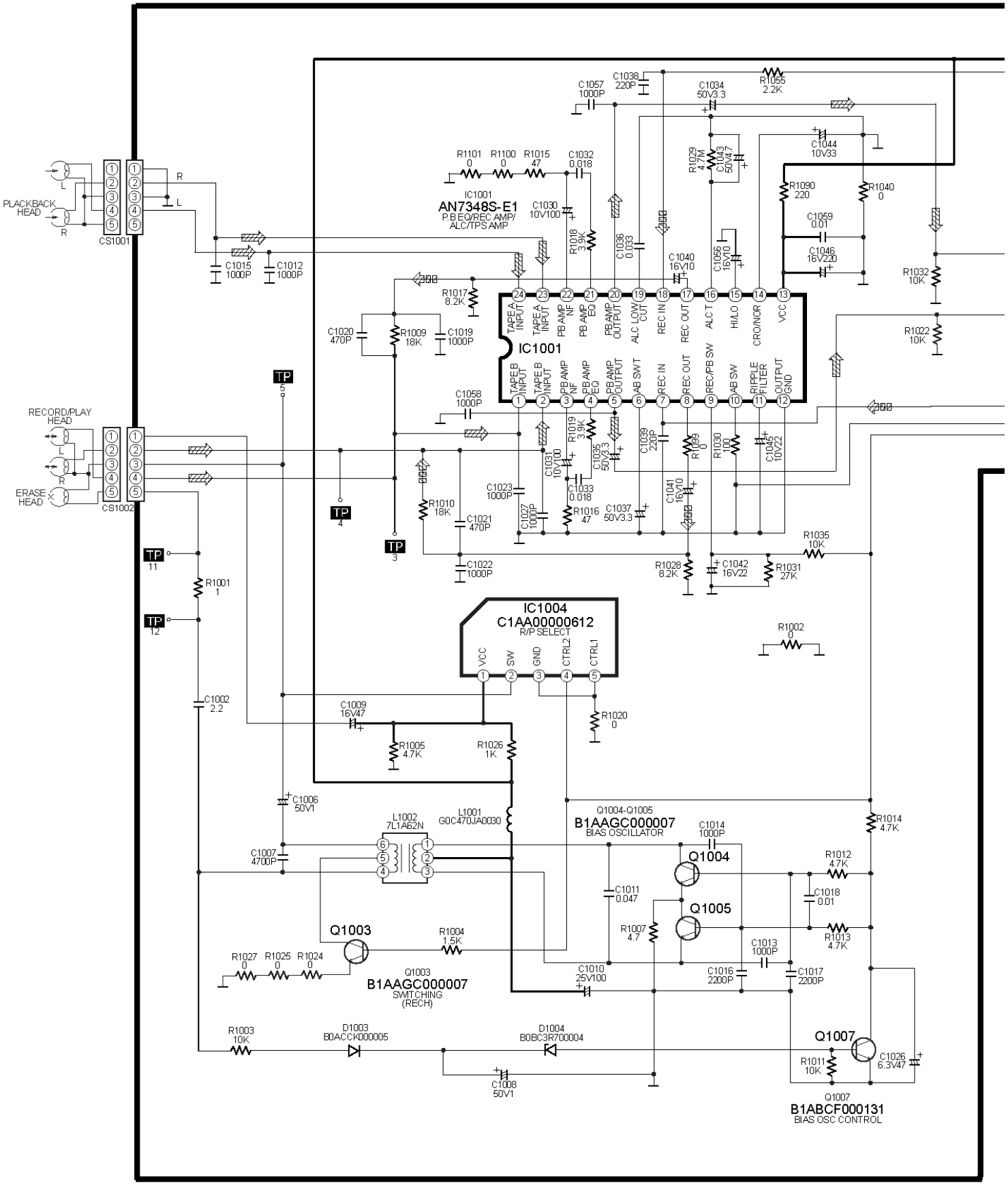

: +B SIGNAL LINE
: PLAYBACK SIGNAL LINE
: RECORD SIGNAL LINE

I DECK CIRCUIT

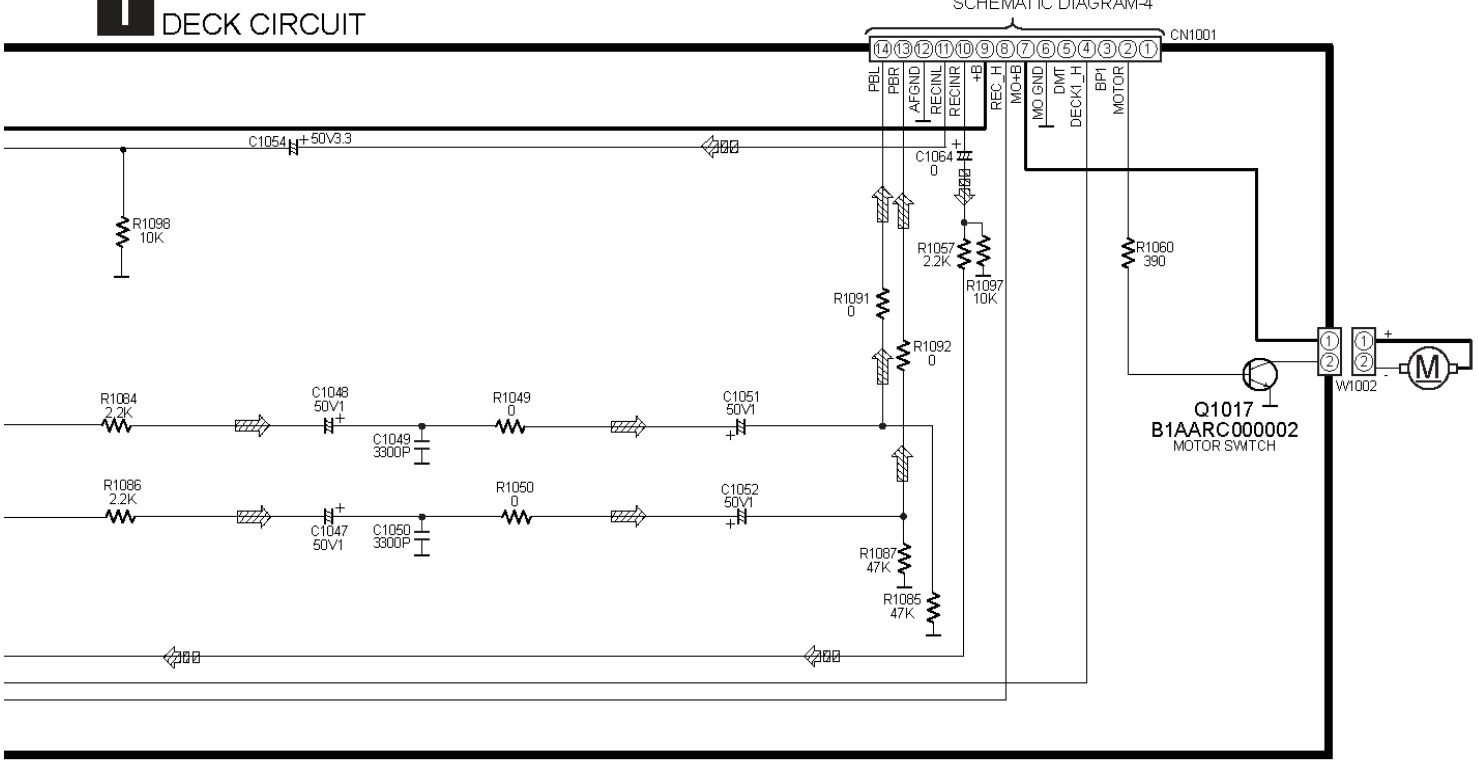

J DECK MECHANISM CIRCUIT

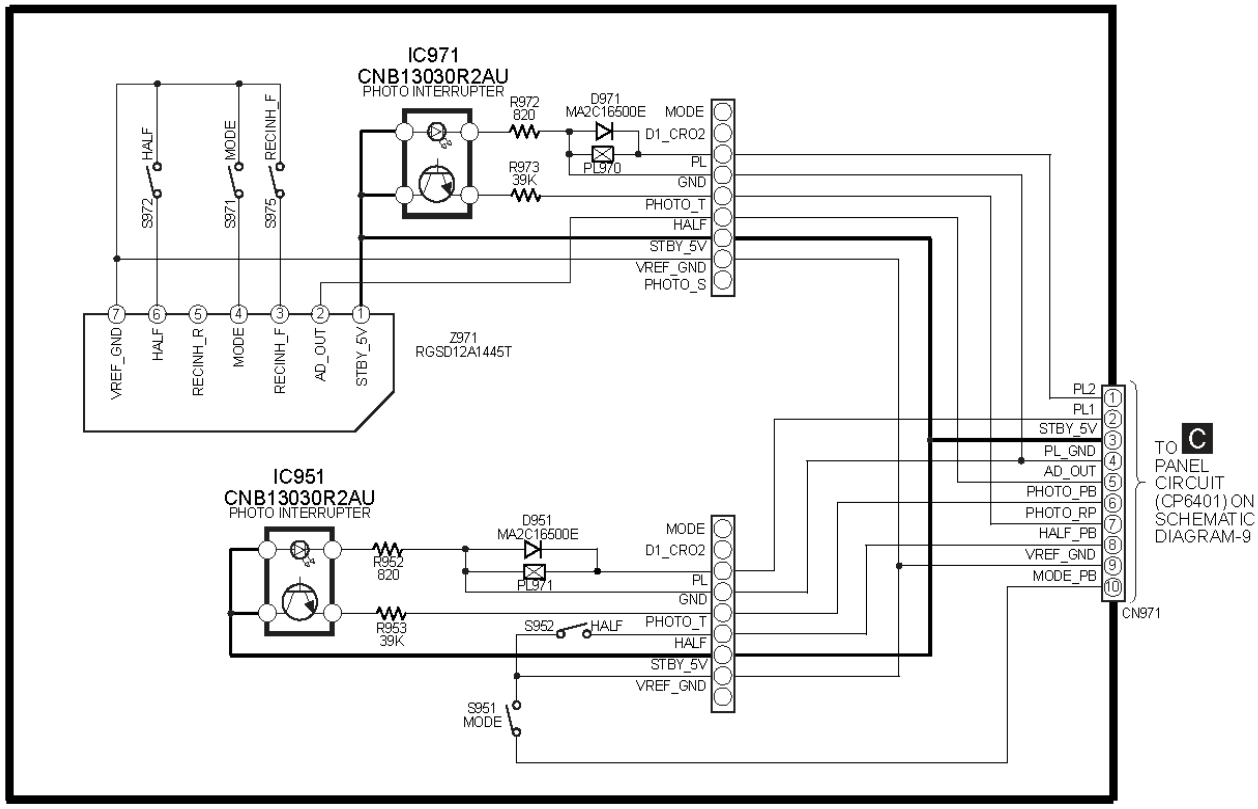

18 Printed Circuit Board

Note: Circuit board diagrams may be modified at any time with the development of new technology.

18.1 (A) CD Servo P.C.B.

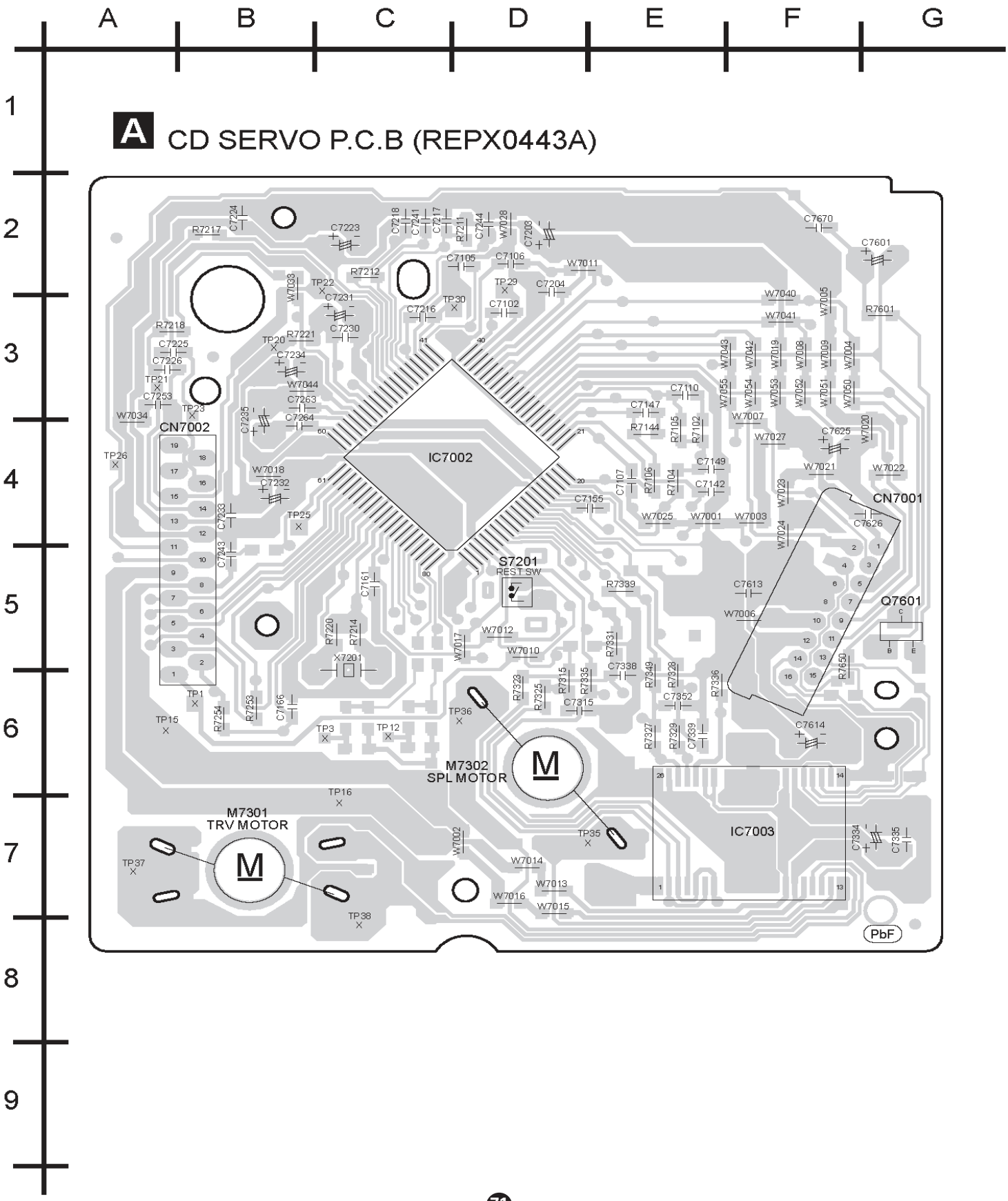

A B C D E F G

1 2 3 4 5 6 7 8 9

B MAIN P.C.B (REPX0442A)

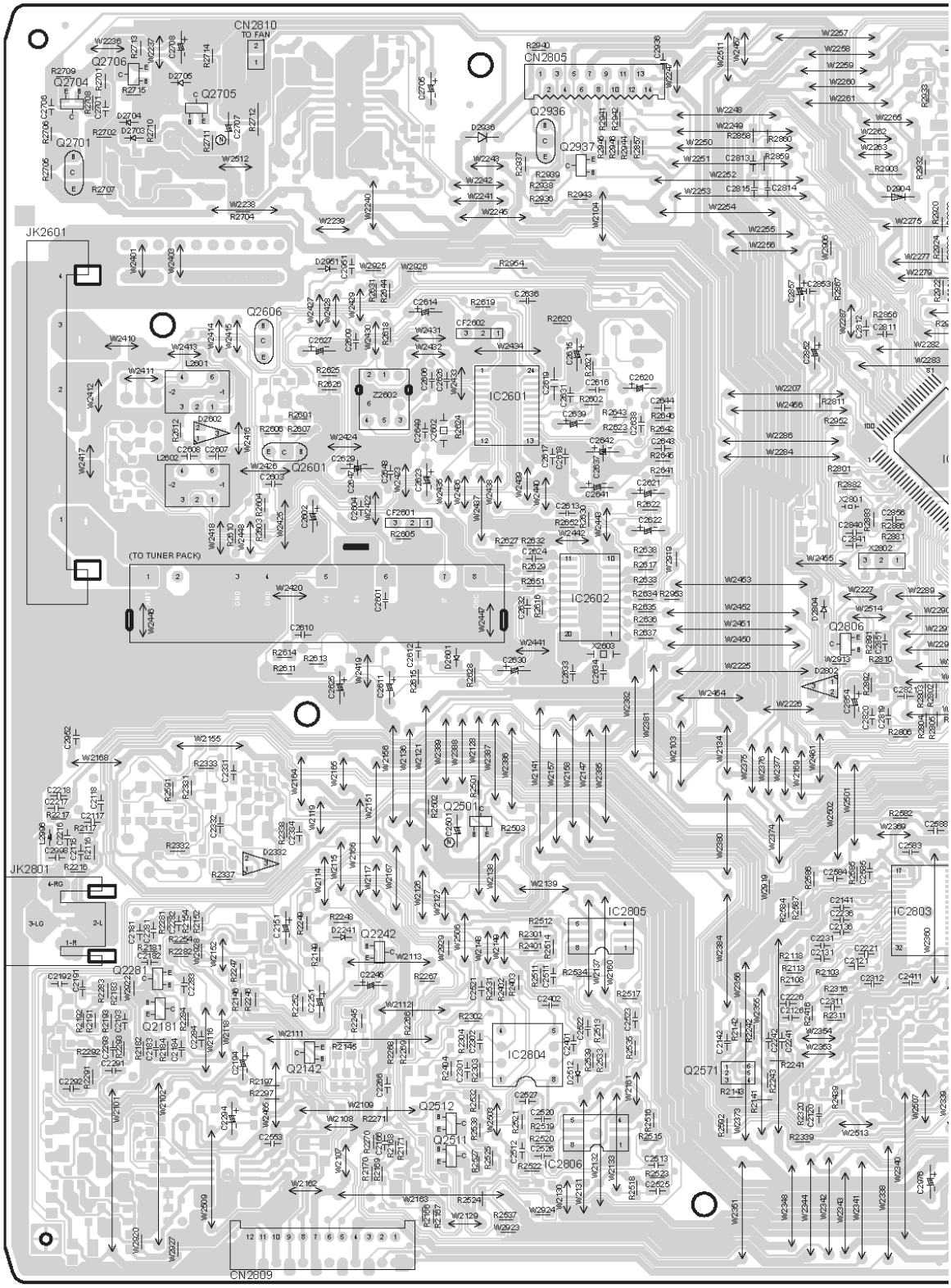

G H I J K L M

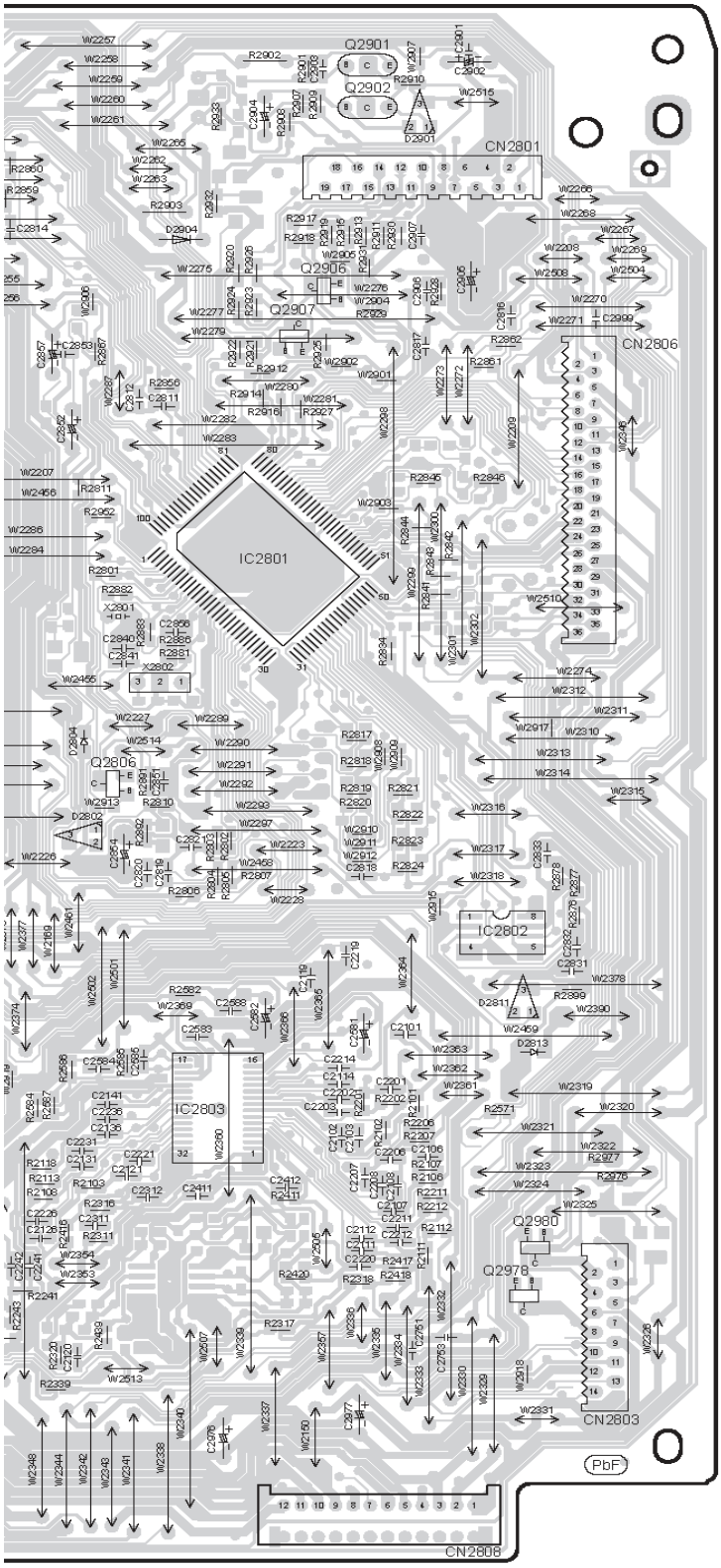
Q2901
Q2902
CN2801
Q2906
Q2907
CN2806
IC2801
Q2806
IC2802
IC2803
Q2980
Q2978
CN2803
CN2808
PbF

C PANEL P.C.B (REPX0441A)

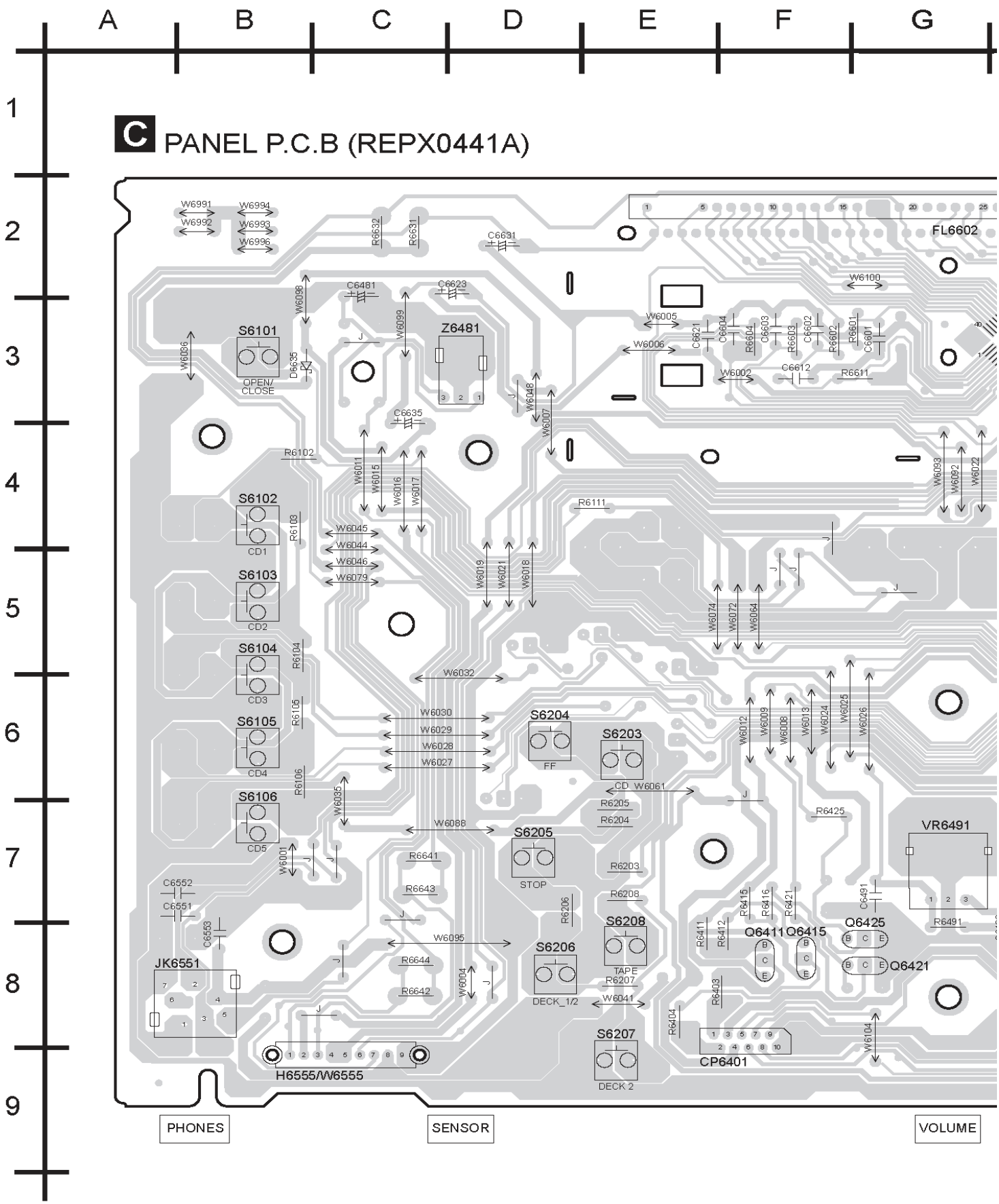

G
H
I
J
K
L
M

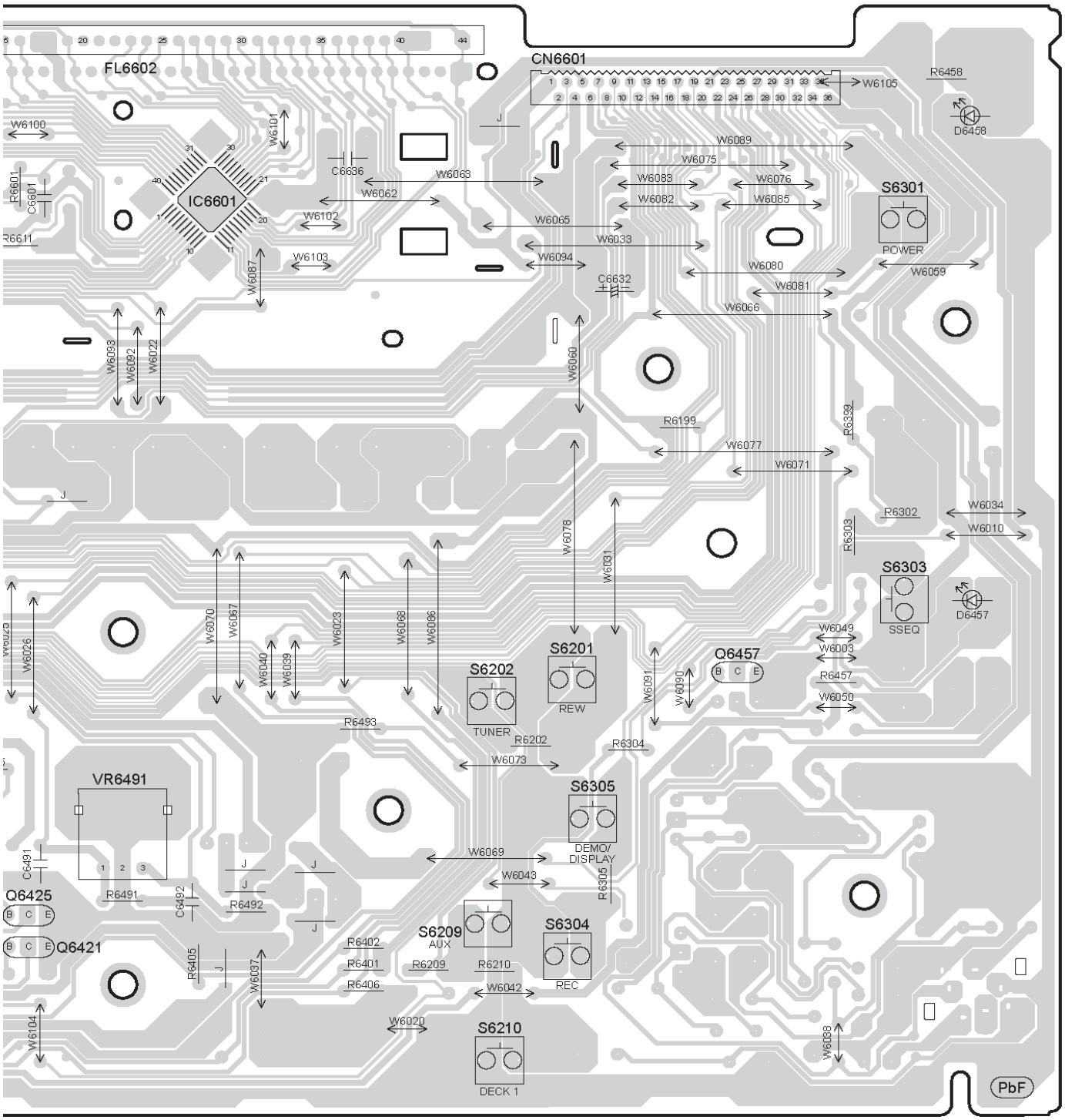
FL6602
CN6601
IC6601
S6301
POWER
S6303
SSEQ
S6201
REW
S6202
TUNER
S6305
DEMO/
DISPLAY
S6209
AUX
S6304
REC
S6210
DECK 1
VR6491
Q6457
Q6425
Q6421
D6458
D6457
PbF

VOLUME

D TRANSFORMER P.C.B (REPX0467A)

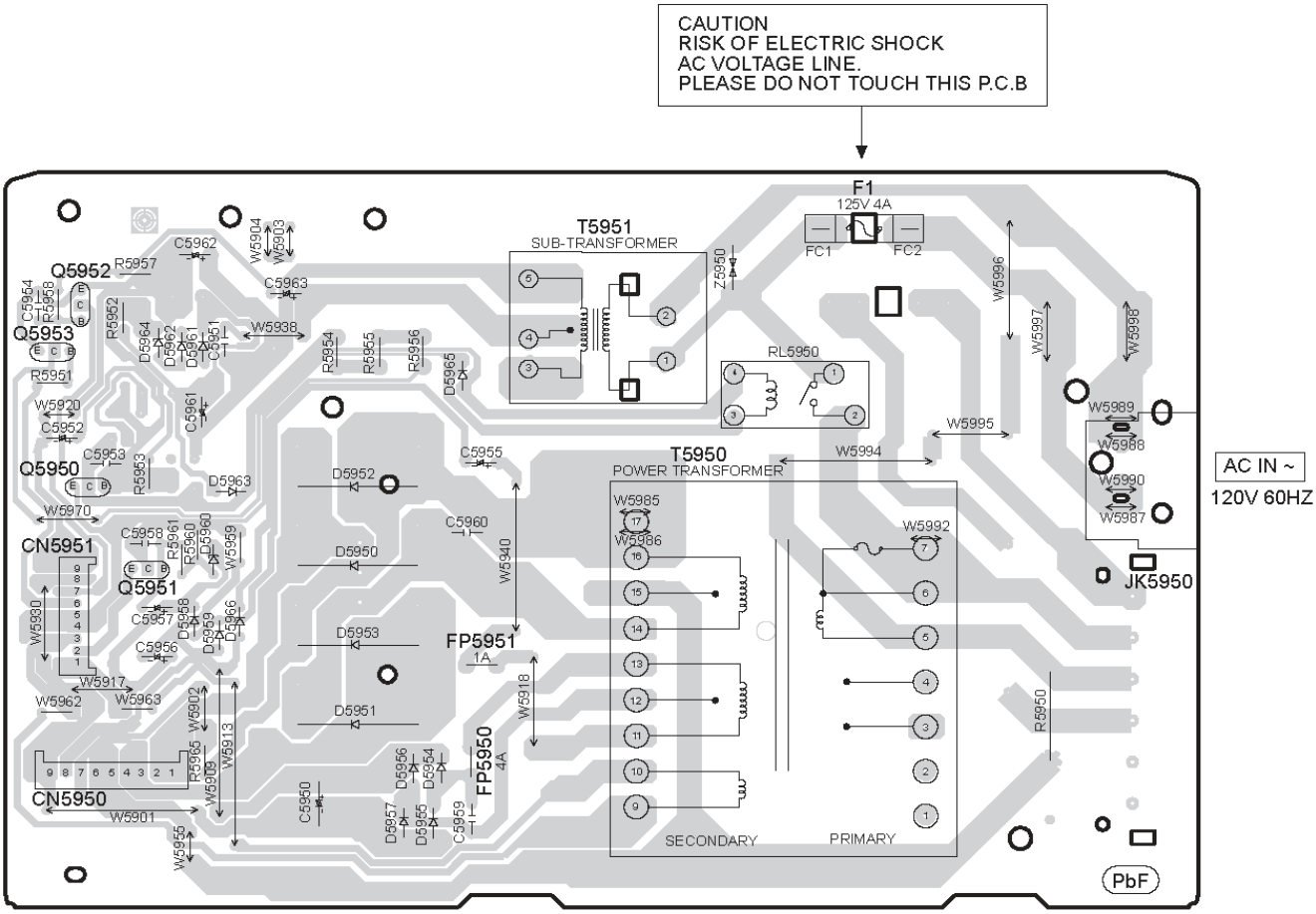

18.5 (E) CD Detect P.C.B., (F) Spindle Position P.C.B., (G) CD Loading P.C.B.& (K) Tuner Pack P.C.B.

A B C D E F G

1 2 3 4 5 6 7 8 9

G CD LOADING P.C.B (REP2578A-N)

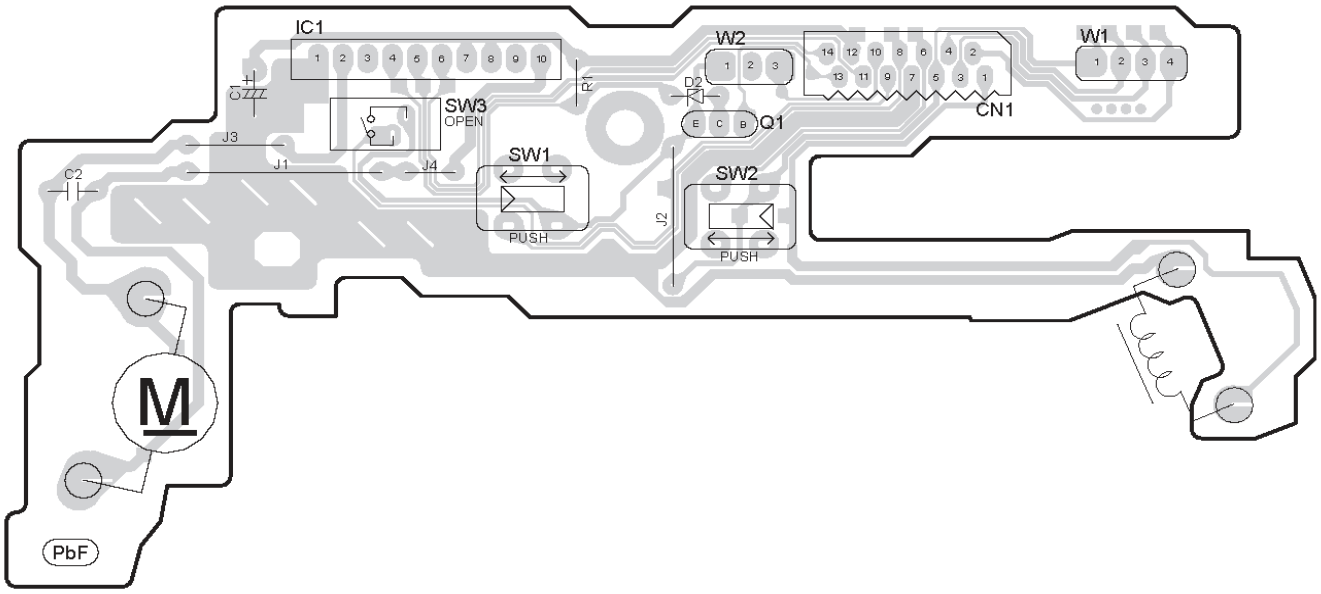

E CD DETECT P.C.B (REP2578A-N)

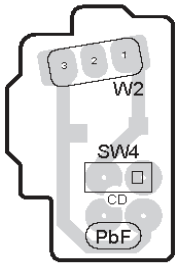

F SPINDLE POSITION P.C.B (REP2578A-N)

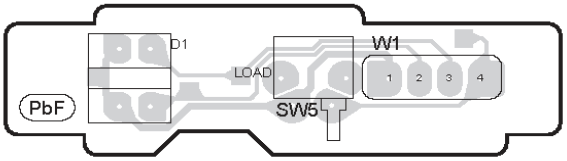

K TUNER PACK P.C.B (REP1999B)

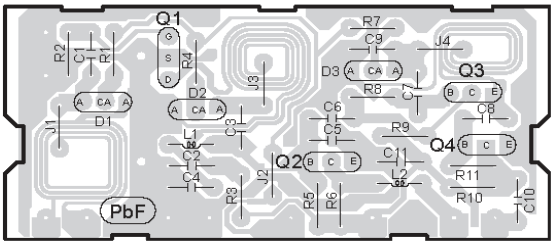

H POWER P.C.B (REPX0469A)

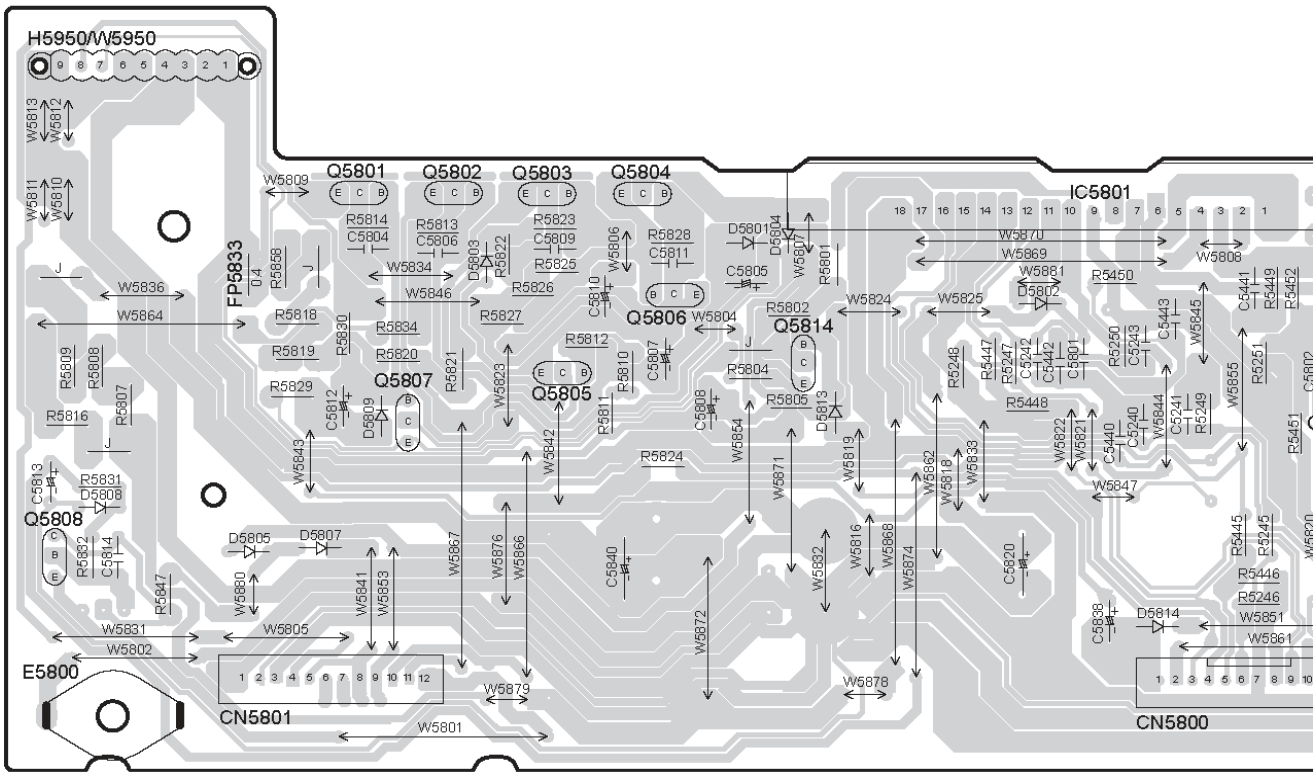

G
H
I
J
K
L
M

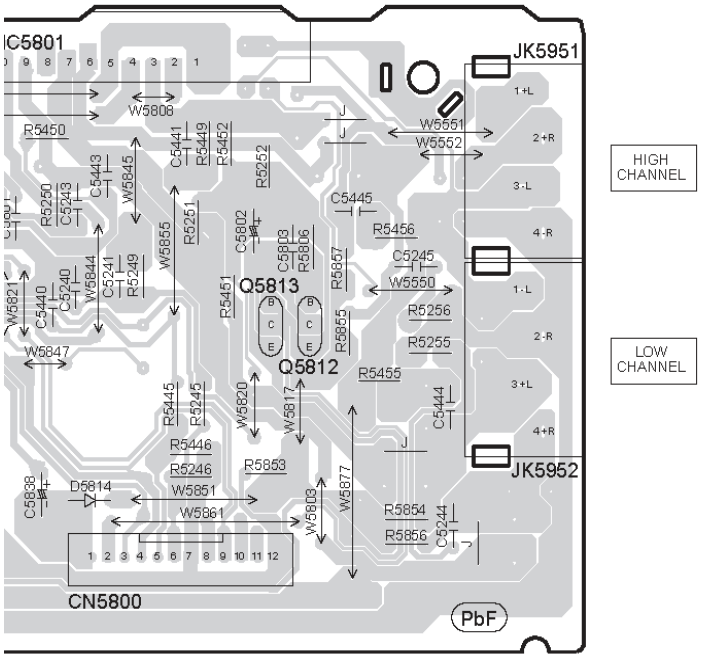
IC5801
JK5951
JK5952
CN5800
Q5813
Q5812
PbF
HIGH CHANNEL
LOW CHANNEL
1+L
2+R
3-L
4-R
1-L
2-R
3+L
4+R
W5808
R5450
C5441
R5449
R5452
R5252
W5551
W5552
C5443
W5845
R5250
C5243
R5251
W5855
C5445
R5456
C5802
C5803
R5806
R5857
C5245
W5550
C5240
W5844
C5241
R5249
R5451
R5256
R5255
R5855
W5847
R5455
R5445
R5245
W5820
W5817
C5444
R5446
R5246
R5853
D5814
W5851
W5861
W5803
W5877
R5854
R5856
C5244
C5838
1 2 3 4 5 6 7 8 9 10 11 12

18.7 (I) Deck P.C.B.& (J) Deck Mechanism P.C.B.

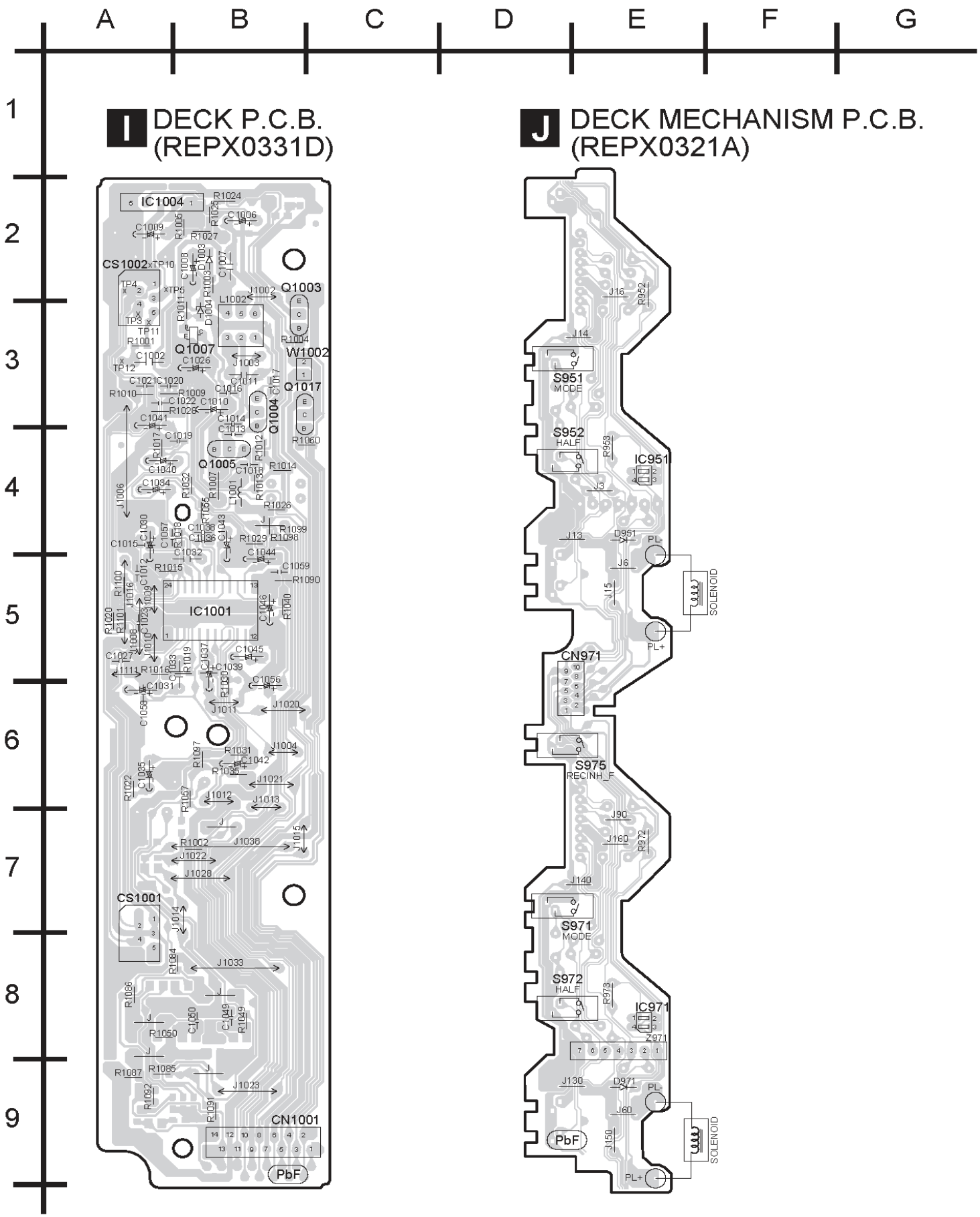

19 Wiring Connection Diagram

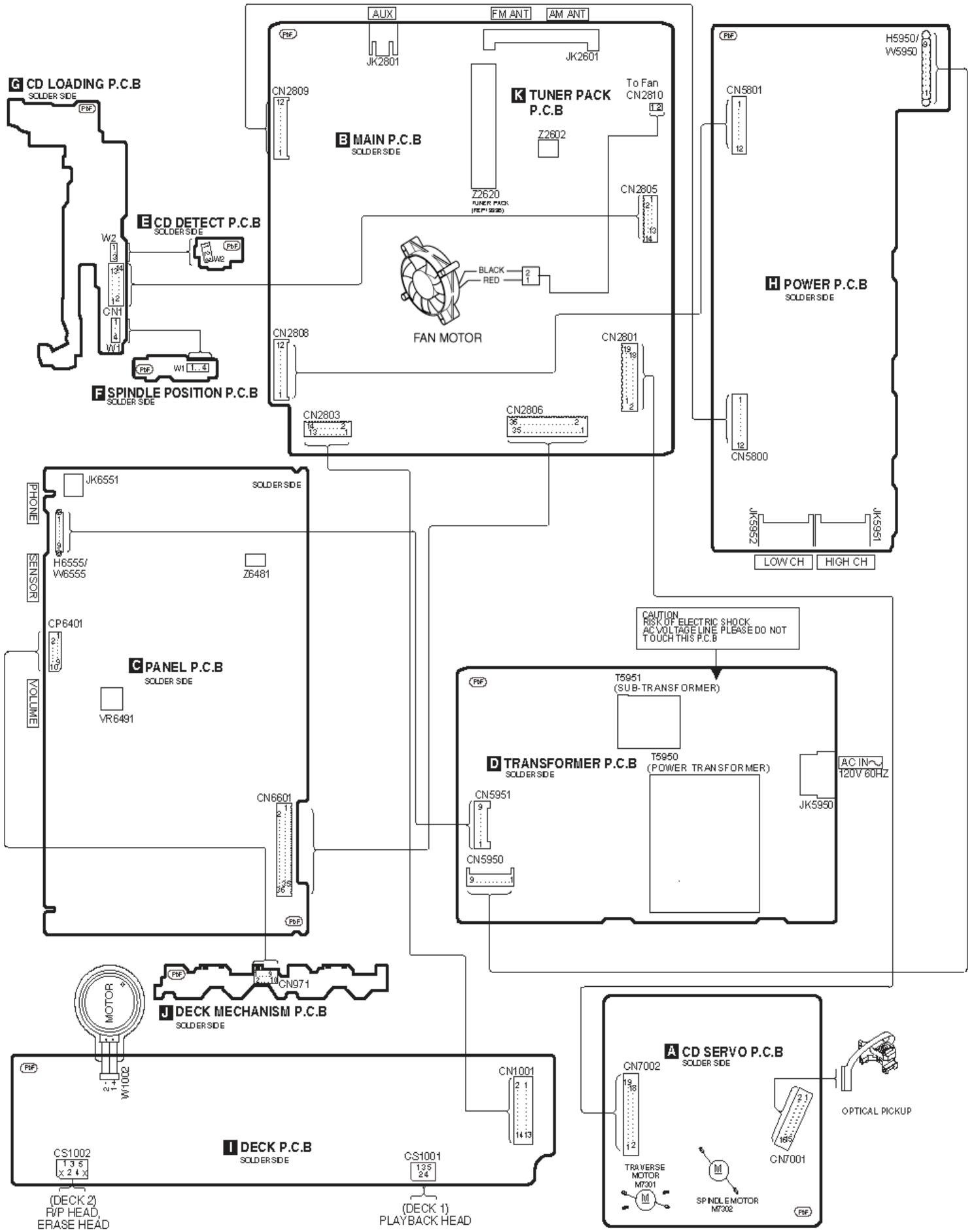

20 Illustration of IC's, Transistors and Diodes

C2CBJG000564 (100P)
C0HBB0000044 (48P)
MN6627953HB (80P)

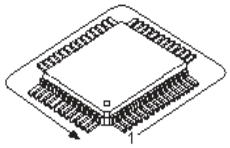

AN7348S-E1 (24P)
LA1833NMNTLM (24P)
LC72131MDTRM (20P)
C1BB00000732 (32P)

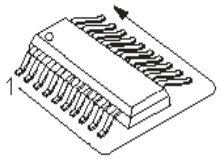

C1AA00000612

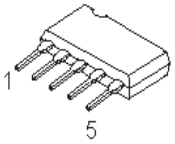

C0AABA000009

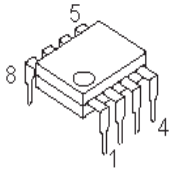

RSN315H42C-P

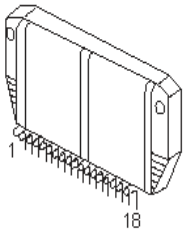

CNB13030R2AU

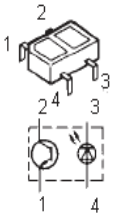

AN8739SBTE2

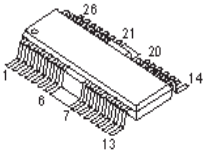

C0GAM0000005

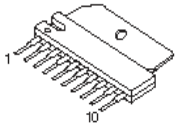

C0ABBB000244

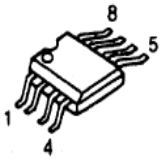

2SB0709AHL
2SB0601AHL
B1ADCF000001
B1ABCF000131
B1GDCFJJ0023
B1GBCJFF0039

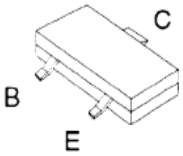

B1AAGC000007
B1GACFGG0004

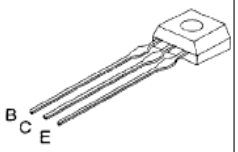

B1ACKD000004
B1AARC000002
B1GCCFJJ0015
B1GCCFGA0005
2SD0592ARA

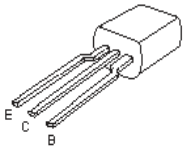

B1AAAC000011
B1AAAD000013
B1ACCF000063
B1GACFJJ0016
B1GACFLL0007

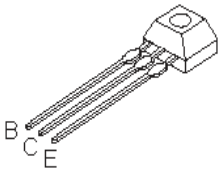

B1GFGCAA0001

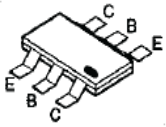

2SB621ARSTA

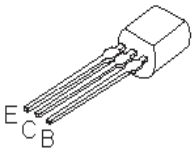

B1AABC000003

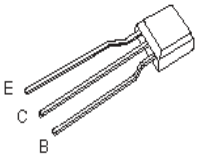

B1AACF000064

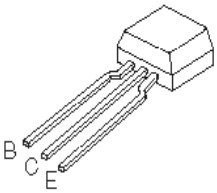

B1BACD000017

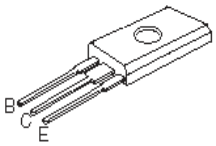

2SK544F-AC

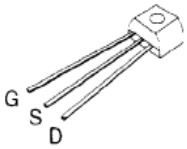

B1AAKD000009

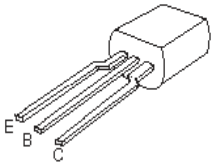

B1BACG000023
B1BCCG000002

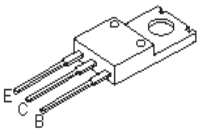

B3NAA0000096

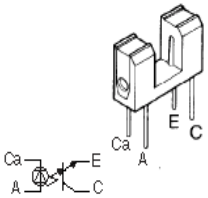

B3AAA0000583

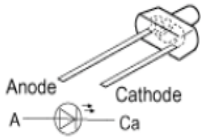

B0BA4R600003

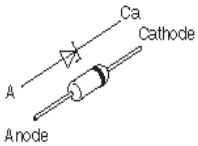

B0AACK000004
B0ACCK000005
MA2C16500E

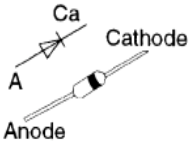

RB751V-40

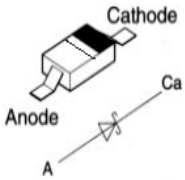

B0EAMM000038
B0EAKM000117

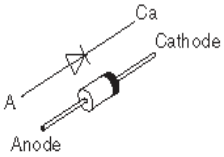

B0BA6R600008
B0BC3R700004
B0BC5R000009
B0BC7R500001

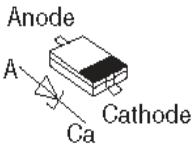

B0ADCC000002

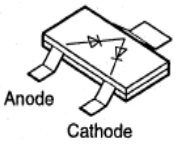

B0BA01500003
B0BA9R600002
B0BA5R600016
MTZJ30ATA

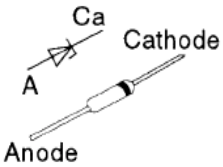

B0ADCJ000020

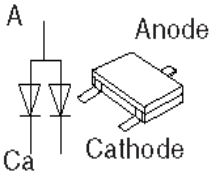

B0CAAD000002
B0CDBB000015

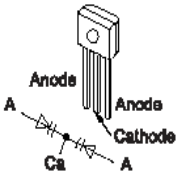

21.1 IC7002 (MN6627953HB) Servo processor/ Digital signal processor/ Digital filter/ D/A converter

Pin No.	Mark	I/O	Function
1	EXT0	I/O	Extend input/output port 0
2	EXT1	I/O	Extend input/output port 1
3	EXT2	I/O	Extend input/output port 2
4	PWMSEL	I	PWM output selection input (L: Direct; H: Tri-State
5	SPOUT	O	Spindle driver output signal
6	SPPOL	O	Spindle driver output signal
7	TRVP	O	Spindle driver output signal
8	TRVM	O	Spindle driver output signal
9	TRVP2	O	Traverse driver output signal 2 (+)
10	TRVM2	O	Traverse driver output signal 2 (-)
11	TRP	O	Traverse driver output signal (+)
12	TRM	O	Traverse driver output signal (-)
13	FOP	O	Traverse driver output signal (+)
14	FOM	O	Traverse driver output signal (-)
15	IOVDD3	-	I/O power supply 3
16	DVDD1	-	Power supply 1 for digital circuit
17	DVSS1	-	Digital circuit GND 1
18	ADPVCC	I	Power voltage monitor. Power voltage input
19	TEIN	I	DSP traverse error signal input
20	FEIN	I	DSP focus error signal input
21	CEA	I/O	HPF-Amp capacitance connection terminal
22	RFENV	O	RF envelope signal monitor
23	FEOUT	O	FE Amp output
24	FEN	I	FE Amp reversal input
25	TEN	I	TE Amp reversal input
26	TEOUT	O	TE Amp output
27	VREF	O	VREF output
28	PD	I	APC Amp input
29	LD	O	APC Amp output
30	E	I	Tracking input signal 1
31	F	I	Tracking input signal 2
32	D	I	Tracking input signal 4
33	B	I	Tracking input signal 2
34	C	I	Tracking input signal 3
35	A	I	Focus input signal 1
36	DCDET	I	Detection HPF capacitance terminal
37	RFVDD	-	RF Amp power supply
38	RESERVE	-	AVSS2
39	RFOUT	O	RF Amp output
40	RFIN	I	AGC input
41	CAGC	I/O	AGC control terminal
42	ARFOUT	O	AGC output (Audio RF)
43	AVSS2	-	Analog circuit GND 2
44	ARFIN	I	RF signal input
45	DSLF	O	DSL loop filter
46	IREF	I	I (current), Reference input
47	PLLF	O	PLL loop filter
48	PLLF0	O	PLL loop filter
49	AVDD2	-	Analog circuit power supply 2
50	OUTL	O	LCH output signal
51	AVSS1	-	Audio output circuit GND 1

52	N.C.	-	No Connection
53	AVDD1	-	Power supply 1 for analog circuit
54	OUTR	O	RCH output signal
55	DVSS2	-	Digital circuit GND 2
56	IOVDD1	-	I/O power supply 1
57	DVDD2	-	Power supply 2 for Digital circuit
58	REGON	I	Laser diode control (H: ON)
59	IOMODE	I	I/O switching setting input
60	NTEST	I	Test mode setting input (H: ON)
61	TX	O	Digital audio interface output
62	FLAG	O	Flag signal output
63	MCLK	I	Micro-P serial command CLK
64	MDATA	I	Micro-P serial command DATA
65	MLD	I	Micro-P serial command LOAD
66	STAT	O	Status signal output
67	BLKCK	O	Subcode block clock
68	NRST	I	LSI reset input (L: RESET)
69	DVSS3	-	Digital circuit GND 3
70	X2	O	Crystal oscillator circuit output
71	X1	I	Crystal oscillator circuit input
72	IOVDD2	I	I/O power supply 2
73	DQSY	O	Pack signal output for CD-Text data
74	TXTD	O	CDText signal output
75	TXTCK	I	External clock signal input for CD-Text register
76	GIO0	I/O	General purpose input/output Terminal 0
77	GIO1	I/O	General purpose input/output Terminal 1
78	GIO2	I/O	General purpose input/output Terminal 2
79	GOUT0	O	General purpose output Terminal 0
80	GOUT1	O	General purpose output Terminal 1

21.2 IC7003 (AN8739SBTE2) Focus coil/ Tracking coil/ Traverse motor/ Spindle motor drive

Pin No.	Mark	I/O	Function
1	/RST	O	RESET output terminal
2	NC	-	N.C.
3	IN2	I	Motor drive (2) input
4	PC2	I	Turntable motor drive signal ("L" :ON)
5	NC	-	N.C.
6	IN1	I	Motor driver (1) input
7	PVCC1	-	Power supply (1) for driver
8	PGND1	-	Ground connection (1) for
9	NC	-	N.C.
10	D1-	O	Motor driver (1) reverse-action output
11	D1+	O	Motor driver (1) forward-action output
12	D2-	O	Motor driver (2) reverse-action output
13	D2+	O	Motor driver (2) forward-action output
14	D3-	O	Motor driver (3) reverse-action output
15	D3+	O	Crystal oscillating circuit input (f = 16.9344MHz)
16	D4-	O	Motor driver (4) reverse-action output
17	D4+	O	Motor driver (4) forward-action output
18	NC	-	N.C.
19	PGND2	-	Ground connection (2) for
20	PVCC2	-	Power supply (2) for driver
21	VCC	-	Power supply terminal
22	VREF	-	Reference voltage input
23	IN4	I	Motor driver (4) input
24	IN3	I	Motor driver (3) input
25	RSTIN	I	Reset terminal
26	NC	-	N.C.

21.3 IC2801 (CC2CBJG000564) System Microprocessor

Pin No.	Mark	I/O	Function
1	LM_1	I	Level Meter Left
2	N.C.	-	No Connection
3	PLL_CE	O	PLL Chip Select
4	RDS_DAT	I	RDS Data Input
5	RDS_CLK	I	RDS Clock Input
6	N.C.	-	No Connection
7	N.C.	-	No Connection
8	BYTE	I	External Data Bus Width Select Input
9	CNVss/EFP_ CNVss	-	Flash Mode Terminal (Connect to ground)
10	Xcin	-	32.768 kHz Sub Clock
11	Xcout	-	32.768 kHz Sub Clock

12	/RESET/EFP_RESET	I	Reset Input (ACTIVE L)
13	Xout	-	10 MHz Main Clock
14	Vss	-	Ground (0V)
15	Xin	-	10 MHz Main Clock
16	Vcc	-	Power Supply (+5V)
17	/NMI	-	Connect to Vcc (+5V)
18	RMT	I	Remote Control Input
19	BLKCK	I	CD Block Clock Input
20	SYNC	I	AC Failure Detect Input
21	ST/DO	I	Tuner IF Data/ Stereo Input
22	SD	I	Tuner Signal Detect Input
23	Harmonic_ SW	I/O	*3 Harmonic Switch (Active L)
24	SW_LVL 1	O	*4 Sub-Woofer Level 1
25	SW_LVL 2	O	*4 Sub-Woofer Level 2
26	ASP_DAT	O	ASP Data
27	ASP_CLK	O	ASP Clock
28	N.C.	-	No Connection
29	PLL_DATA	O	PLL DATA
30	PLL_CLK	O	PLLCLK
31	REG 8/EFP_RxD1	I	Region Setting 8 (Subwoofer)
32	REG 7/ EFP_RxD1	I	Region Setting 7 (MIC)
33	REG 6/EFP_SCLK	I	Region Setting 6 (RDS)
34	REG 5/ EFP_BUSY	I	Region Setting 5 (Optical Out)
35	REG 4	I	Region Setting 4 (Deck Mechanism)
36	REG 3	I	Region Setting 3 (Tuner)
37	REG 2	I	Region Setting 2 (Tuner)
38	REG 1	I	Region Setting 1 (Tuner)
39	MUTE_H	O	HIC Mute
40	MUTE_A	O	Audio Mute
41	EE_CS/EFP_ /EPM	O	EEPROM Chip Select
42	EE_CLK	O	EEPROM Clock
43	EE_DAT	I/O	EEPROM Data
44	N.C.	-	No Connection
45	N.C.	-	No Connection
46	PCONT/ EFP_/CE	O	Main Transformer Control Output
47	DCDET	I	DC Detect Input
48-51	N.C.	-	No Connection
52	HALF_1	I	Deck 1 Half Playback Input
53	MODE_1	I	Deck 1 Mode Playback Input
54	SW_LED	O	*2 Sub Woofer LED
55	N.C.	-	No Connection
56	PLG1	O	Deck 1 plunger control
57	PLG2	O	Deck 2 plunger control
58	MTR	I/O	Deck motor control
			("L" for motor ON)
59	REC	I/O	L when record circuit is
60	DECK1_H	O	H when DECK 1 P/B head is selected
61	N.C.	-	No Connection

62	Vcc	-	Power Supply (+5V)
63	N.C.	-	No Connection
64	Vss	-	Ground (0V)
65-66	N.C.	-	No Connection
67	V_JOG_A	I	Volume Jog A
68	V_JOG_B	I	Volume Jog B
69	EX1_CLK	I/O	*1 I/O Expander Clock
70	EX1_DAT	I	*1 I/O Expander Data
71	/FL_RESET	O	Reset Input (ACTIVE L)
72	FL_CS	I/O	FL Driver Chip Select
73	FL_DOUT	O	Serial Data To FL Driver
74	FL_CLK	I/O	Serial Clock To FL Driver
75	N.C.	-	No Connection
76	SSEQ_LED	O	Super Sound EQ LED
77	CD_RST	O	CD Reset Output
78	STATUS	I	CD Servo LSI Status Input
79	MLD	O	CD Command Load Output
80	MDATA_OUT	O	CD Command Data Output
81	MCLK	O	CD Command Clock Output
82	/RESTSW	I	CD Limit Switch Input for the Most Inner Point (Active Low)
83	CHG_HLF	O	Changer Half Drive Output
84	CHG_CW	O	Changer Motor Clockwise Output
85	CHG_CCW	O	Changer Motor Counterclockwise Output
86	CHG_SW1	I	CD Changer Switch 1 Input
87	CHG_SW2	I	CD Changer Switch 2 Input
88	CHG_PLR	O	Changer Plunger Output
89	CHG_AD2	I	Changer AD Detection Input
			(Position/Bottom)
90	CHG_AD1	I	Changer AD Detection Input
			(Open/Clamp)
91	DECK2	I	DECK CONDITION INPUT 2
			(R_INHF/MODE2/HALF2)
92	KEY3	I	KEY3 INPUT
93	KEY2	I	KEY2 INPUT
94	KEY1	I	KEY1 INPUT
95	PHOTO_2	I	Rotation Detection Signal (Deck 2)
96	AVss	-	Analog Power Supply Input (Connect to GND)
97	PHOTO_1	I	Rotation Detection Signal (Deck 1)
98	VREF	-	Reference for A-D (5V)
99	AVcc	-	Analog Power Supply Input
100	Demo Selector	I	(H= default demo on, L= default demo off.)

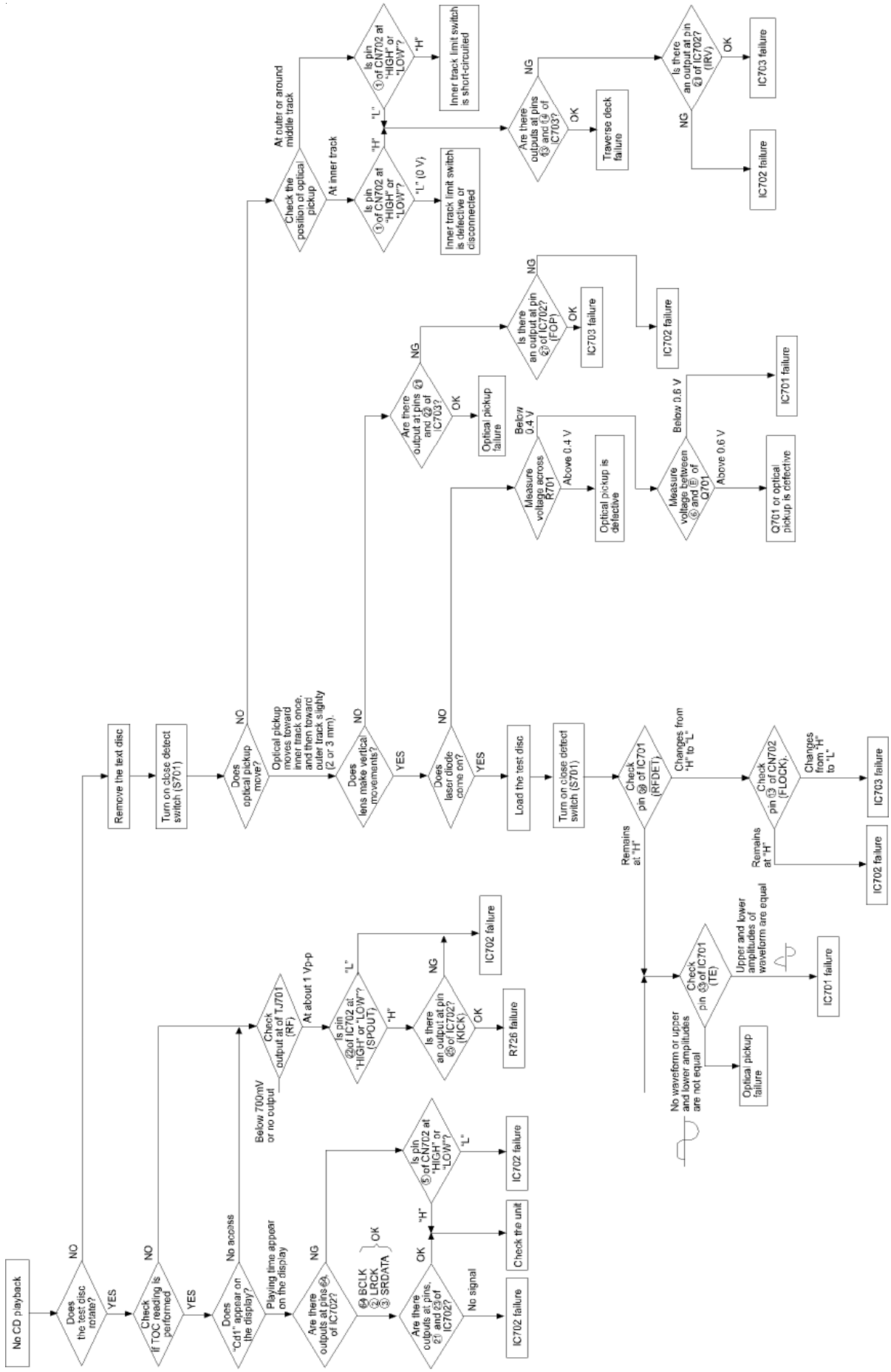
No CD playback
Does the test disc rotate?
NO
YES
Check if TOC reading is performed
NO
YES
Does "Cd t" appear on the display?
No access
Playing time appear on the display
Are there outputs at pins ⑭, ⑫ of IC702?
NG
⑭ BCLK
⑫ LRCK
⑬ SRDATA
OK
Are there outputs at pins, ㉑ and ㉒ of IC702?
OK
"H"
No signal
Check the unit
IC702 failure
Is pin ⑤ of CN702 at "HIGH" or "LOW"?
"L"
IC702 failure
Check output at of TJ701 (RF)
Below 700mV or no output
At about 1 Vp-p
Is pin ㉒ of IC702 at "HIGH" or "LOW"? (SPOUT)
"L"
"H"
IC702 failure
Is there an output at pin ㉕ of IC702? (KICK)
NG
OK
R726 failure
Remove the test disc
Turn on close detect switch (S701)
Does optical pickup move?
NO
Optical pickup moves toward inner track once, and then toward outer track slightly (2 or 3 mm).
Check the position of optical pickup
At outer or around middle track
At inner track
Is pin ① of CN702 at "HIGH" or "LOW"?
"H"
Inner track limit switch is short-circuited
"L"
Is pin ③ of CN702 at "HIGH" or "LOW"?
"H"
"L" (0 V)
Inner track limit switch is defective or disconnected
Are there outputs at pins ⑬ and ⑭ of IC703?
NG
OK
Traverse deck failure
Is there an output at pin ㉑ of IC702? (IRV)
OK
NG
IC703 failure
IC702 failure
Does laser diode come on?
NO
YES
Load the test disc
Turn on close detect switch (S701)
Check pin ㉖ of IC701 (RFDET)
Changes from "H" to "L"
Remains at "H"
Check pin ⑬ of CN702 (FLOCK).
Changes from "H" to "L"
IC703 failure
Remains at "H"
IC702 failure
Check pin ㉓ of IC701 (TE)
Upper and lower amplitudes of waveform are equal
IC701 failure
No waveform or upper and lower amplitudes are not equal
Optical pickup failure
Are there output at pins ㉑ and ㉒ of IC703?
NG
OK
Optical pickup failure
Is there an output at pin ㉑ of IC702? (FOP)
NG
OK
IC703 failure
IC702 failure
Measure voltage across R701
Below 0.4 V
Above 0.4 V
Optical pickup is defective
Measure voltage between ⑥ and Ⓔ of Q701
Below 0.6 V
Above 0.6 V
IC701 failure
Q701 or optical pickup is defective

23 Parts Location and Replacement Parts List

Notes:

- Important safety notice:

  Components identified by mark have special characteristics important for safety.

  Furthermore, special parts which have purposes of fire-retardent (resistors), high-quality sound (capacitors), low noise (resistors), etc are used.

  When replacing any of these components, be sure to use only manufacturer's specified parts shown in the parts list.

- The parenthesized indications in the Remarks columns specify the areas or colour. (Refer to the cover page for area or colour)

  Parts without these indications can be used for all areas.

- Warning: This product uses a laser diode. Refer to caution statements on "Precaution of Laser Diode".
- Capacitor values are in microfarads (~F) unless specified otherwise, P= Pico-farads (pF), F= Farads.
- Resistance values are in ohms, unless specified otherwise, 1K=1,000 (OHM).
- The marking (RTL) indicates that the Retention Time is limited for this items. After the discontinuation of this assembly in production, the item will continue to be available for a specific period of time. The retention period of a availabilityis dependent on the type of assembly, and in accordance with the laws governing part and product retention. After the end of this period, the assembly will no longer be available.
- [M] Indicates in the Remarks columns indicates parts supplied by PAVCSG.
- The "(SF)" mark denotes the standard part.
- Reference for O/I book languages are as follows:

Ar:	Arabic	Du:	Dutch	It:	Italian	Sp	Spanish
Cf:	Canadian French	En:	English	Ko:	Korean	Sw:	Swedish
Cz:	Czech	Fr:	French	Po:	Polish	Co:	Traditional Chinese
Da:	Danish	Ge:	German	Ru:	Russian	Cn:	Simplified Chinese
Pe:	Persian						

23.1.1 Deck Mechanism Parts Location

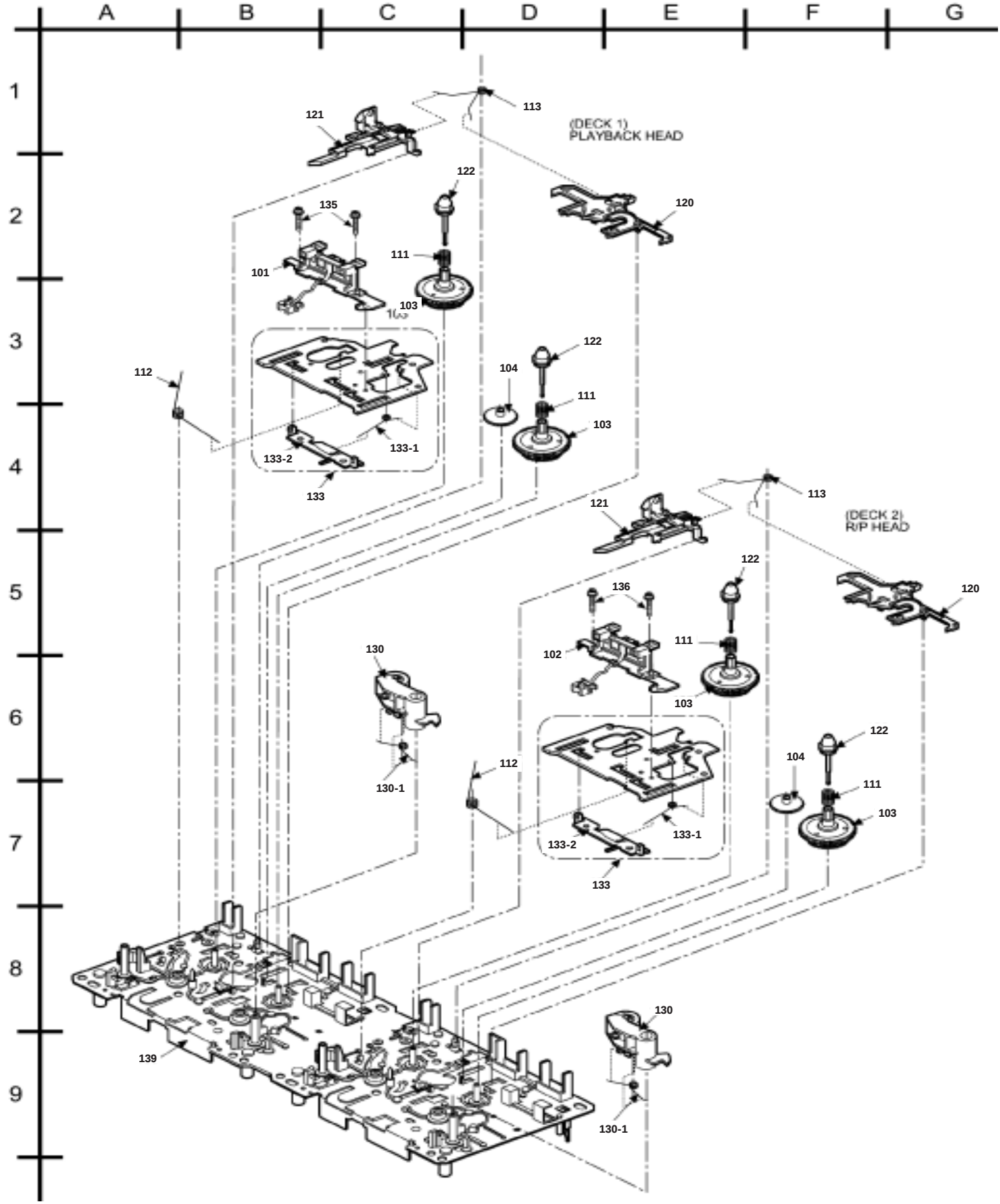

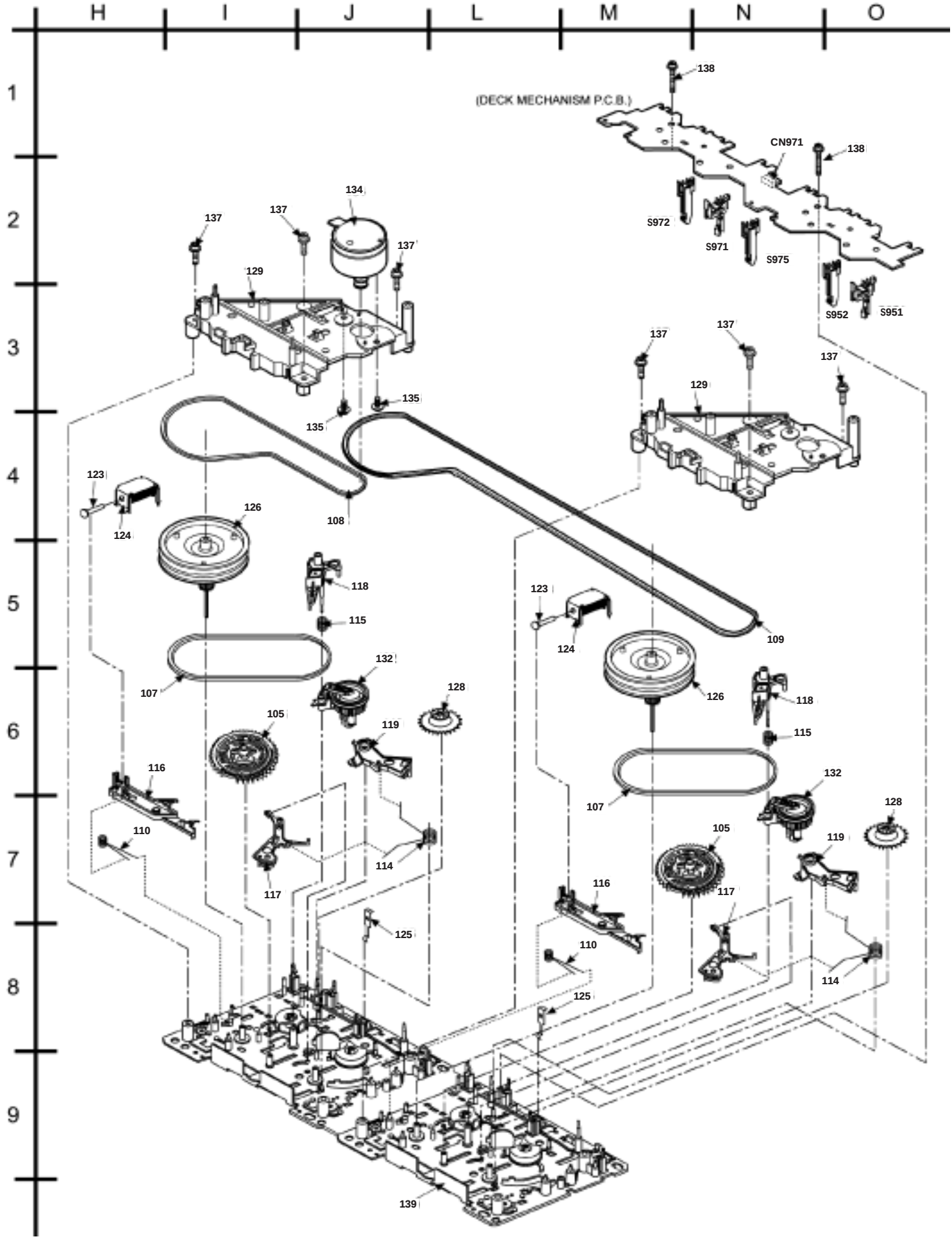
H
I
J
L
M
N
O
1
2
3
4
5
6
7
8
9
(DECK MECHANISM P.C.B.)
138
CN971
138
S972
S971
S975
S952
S951
134
137
137
137
129
135
135
137
137
137
129
123
124
126
108
118
115
123
124
109
107
132
128
126
118
105
119
115
116
132
107
128
110
105
119
114
117
116
117
125
110
114
125
139

23.1.2 Deck Mechanism Parts List

Ref. No.	Part No.	Part Name & Description	Remarks
		CASSETTE DECK	
101	RED0069	R/P HEAD BLOCK UNIT	(P)
102	RED0070	P/B HEAD BLOCK UNIT	(P)
103	RDG0300	REEL BASE GEAR	(P)
104	RDG0301	WINDING RELAY GEAR	(P)
105	RDK0026	MAIN GEAR	(P)
107	RDV0033-4	WINDING BELT	(P)
108	RDV0064	CAPSTAN BELT A	(P)
109	RDV0071	CAPSTAN BELT B	(P)
110	RMB0312	TRIGGER LEVER SPRING	(P)
111	RMB0400	REEL SPRING	(P)
112	RMB0403	HEAD PANEL SPRING	(P)
113	RMB0404	BRAKE ROD SPRING	(P)
114	RMB0406	FR LEVER SPRING	(P)
115	RMB0408	THRUST SPRING	(P)
116	RML0370	TRIGGER LEVER	(P)
117	RML0371	FR LEVER	(P)
118	RML0372	WINDING LEVER	(P)
119	RML0374	EJECT LEVER	(P)
120	RMM0131	BRAKE ROD	(P)
121	RMM0133	EJECT ROD	(P)
122	RMQ0519	REEL HUB	(P)
123	RMS0398-1	MOVING CORE	(P)
124	RSJ0003	PLUNGER ASS'Y	(P)
125	RMC0061	PACK SPRING	(P)
126	RXF0061	FLYWHEEL F ASS'Y	(P)
128	RXG0040	FF RELAY GEAR ASS'Y	(P)
129	RMK0283A-J	SUB-CHASSIS	(P)
130	RXL0124	PINCH ROLLER F ASS'Y	(P)
130-1	RMB0401	PINCH ARM SPRING F	(P)
132	RXL0126	WINDING ARM ASS'Y	(P)
133	RXQ0412	HEAD PANEL ASS'Y	(P)
133-1	RMB0405	FR ROD SPRING	(P)
133-2	RMM0132	FR ROD	(P)
134	REM0121	CAP MOTOR ASS'Y	(P)
135	RHD26022	MOTOR SCREW	(P)
136	XTW2+5L	HEAD BLOCK UNIT SCREW	(P)
137	XTW26+10S	SUB-CHASSIS SCREW	(P)
138	XYC2+JF17	PCB EARTH SCREW	(P)
139	RFKJAA4501-S	CHASSIS ASS'Y	(P)

23.2 CD Loading Mechanism (RD-DAC026-S)

23.2.1 CD Loading Mechanism Parts Location

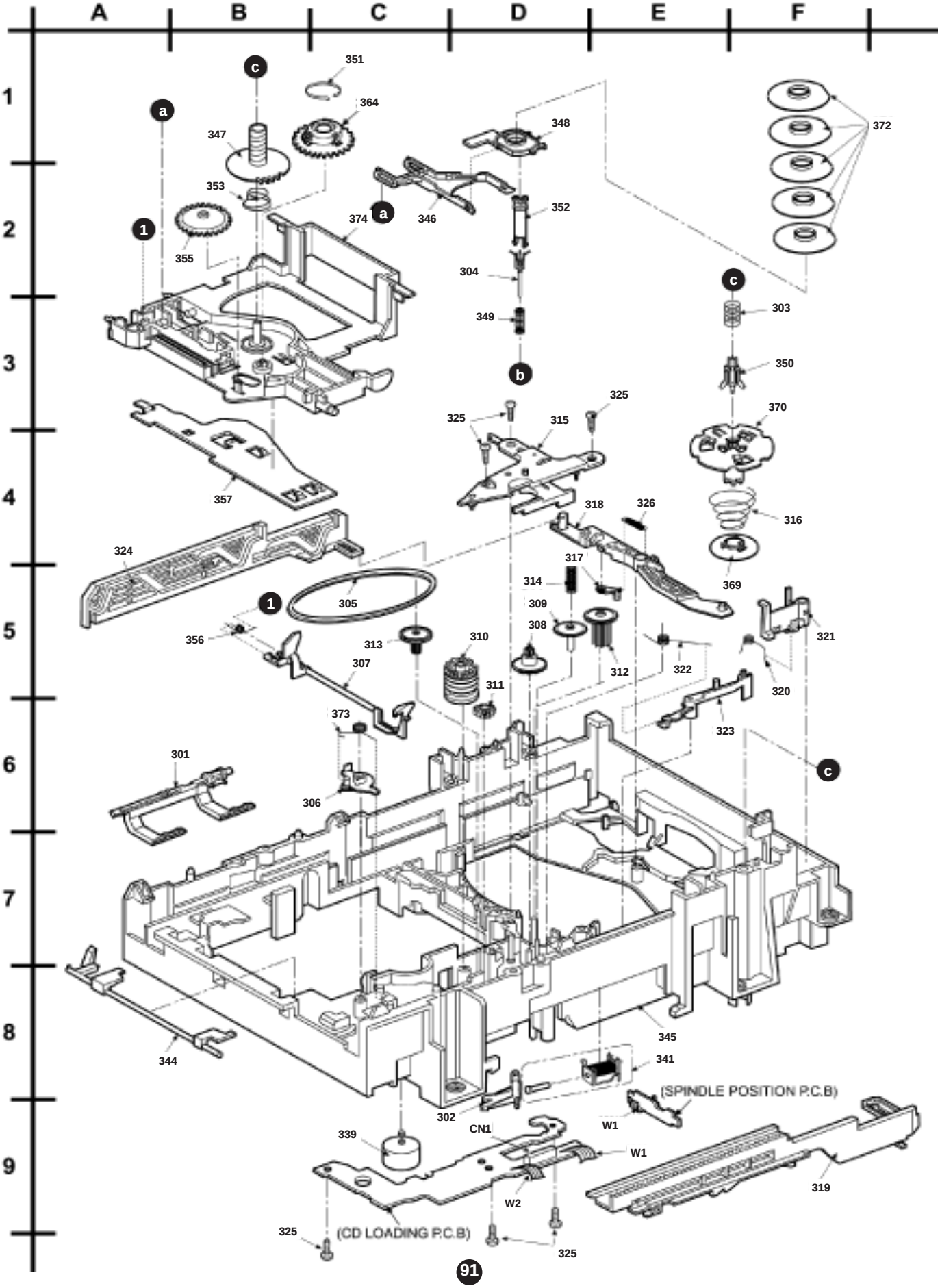

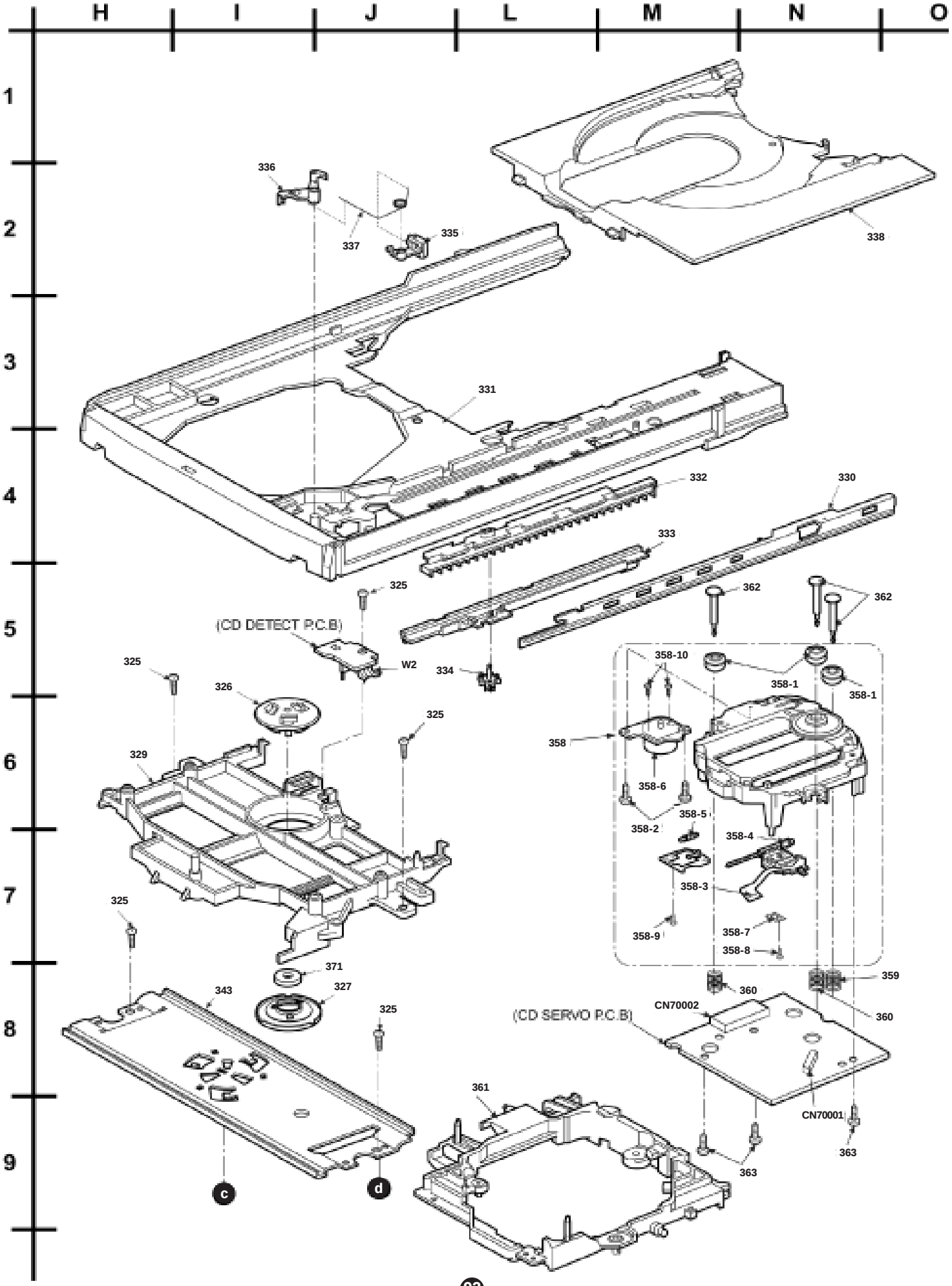
H
I
J
L
M
N
O
1
2
3
4
5
6
7
8
9
336
337
335
338
331
332
330
333
325
362
362
(CD DETECT P.C.B)
W2
334
325
326
325
329
358-10
358-1
358-1
358
358-6
358-2
358-5
358-4
358-3
358-9
358-7
358-8
325
371
327
343
325
360
359
360
CN70002
(CD SERVO P.C.B)
361
CN70001
363
363
c
d

23.2.2 CD Loading Mechanism Parts List

Ref. No.	Part No.	Part Name & Description	Remarks
		TRAVERSE DECK	
301	RML0517	TIMING LEVER	(P)
302	RML0516	PLUNGER LEVER	(P)
303	RMB0551	UPPER SPINDLE SPRING	(P)
304	RMQ0744	LOWER HOOK	(P)
305	RDV0056	BELT	(P)
306	RML0525	FRONT LOCK LEVER	(P)
307	RML0526	DISC LEVER	(P)
308	RDG0424	DRIVE GEAR	(P)
309	RDG0425	CHANGE GEAR	(P)
310	RDG0427	TRAVERSE CAM GEAR	(P)
311	RDG0428	TRAVERSE RELAY GEAR	(P)
312	RDG0426	UP/DOWN GEAR	(P)
313	RDG0429	PULLEY GEAR	(P)
314	RMB0549-1	CHANGE GEAR SPRING	(P)
315	RMQ0748	PITCH PLATE	(P)
316	RMB0553	PUSH SPRING	(P)
317	RML0530	ASSIST LEVER	(P)
318	RML0518	CONNECTION LEVER	(P)
319	RMM0201	SLIDE PLATE 1	(P)
320	RME0258	REAR LOCK SPRING	(P)
321	RML0521	REAR LOCK	(P)
322	RME0257	TRAY LOCK LEVER SPRING	(P)
323	RML0520	TRAY LOCK	(P)
324	RMM0202	SLIDE PLATE 2	(P)
325	XTB3+10J	SCREW	(P)
326	RMR0334	FIXED PLATE	(P)
327	RMR0624-W2	CLAMPER	(P)
328	RMB0561	ASSIST LEVER SPRING	(P)
329	RMR1121-K	MECHA COVER	(P)
330	RMA1110-2	TRAY ANGLE	(P)
331	RMR1122-H1	TRAY BASE	(P)
332	RMM0204	CARRIER	(P)
333	RMM0203	DRIVE RACK	(P)
334	RDG0432	SPEED UP GEAR	(P)
335	RML0524	SLIDE LOCK	(P)
336	RML0523	CARRIER LOCK	(P)
337	RME0260-1	SLIDE LOCK SPRING	(P)
338	RMR1123-H	TRAY	(P)
339	RXQ0595	MOTOR SUB ASS'Y	(P)
341	RSJ0003	SOLENOID ASS'Y	(P)
343	RMA1106	UPPER PLATE	(P)
344	RML0519	CD LEVER	(P)
345	RFKNAAK27GCS	MECHA BASE ASS'Y	(P)
346	RML0522	TURNING STOPPER	(P)
347	RMQ0745	LOWER SPINDLE	(P)
348	RMQ0746	UP/DOWN BASE	(P)
349	RMB0550	LOWER SPINDLE SPRING	(P)
350	RMQ0747	UPPER HOOK	(P)
351	RME0263	CLICK SPRING	(P)
352	RMQ0743	SPINDLE SHAFT	(P)
353	RMB0552	CUSHION SPRING	(P)
354	RDG0430	RELAY GEAR 'A'	(P)
355	RDG0431	RELAY GEAR 'B'	(P)
356	RME0262	DISK LEVER SPRING	(P)
357	RMA1105	SUPPORT PLATE	(P)
358	RAE0153Z-3S	TRAVERSE	(P)
358-1	SHGD113-1	FLOATING CUSHION	(P)
358-2	SNSD38	TRV MOTOR ASSY SCREW	(P)
358-3	RAF0152A-S	OPU UNIT	(P)
358-4	RDG0247	DRIVE GEAR	(P)
358-5	RDG0248	RELAY GEAR	(P)
358-6	RXQ0339	TRAVERSE MOTOR ASS'Y	(P)
358-7	RXQ0304-1	NUT PLATE ASS'Y	(P)
358-8	XQN17+CG5	NUT PLATE ASSY SCREW	(P)
358-9	XQS2+A3FZ	SPINDLE MOTOR SCREW	(P)
358-10	XQS17+A35FZ	TRAVERSE MOTOR SCREW	(P)
359	RME0142	FLOATING SPRING A	(P)
360	RME0109	FLOATING SPRING B	(P)
361	RMR1124A-X	CD TRAVERSE CHASSIS	(P)
362	RMS0632	TRAVERSE PIN	(P)
363	XTN2+6G	SCREW	(P)
369	RMX0141	PUSH SPACER	(P)
370	RMQ0749	UPPER SPINDLE	(P)
371	RHM0001	MAGNET	(P)
372	RMX0140	DISC SPACER	(P)
373	RME0261	FRONT LOCK SPRING	(P)
374	RMQ0742	SPINDLE BASE	(P)

23.3.1 Cabinet Parts Location

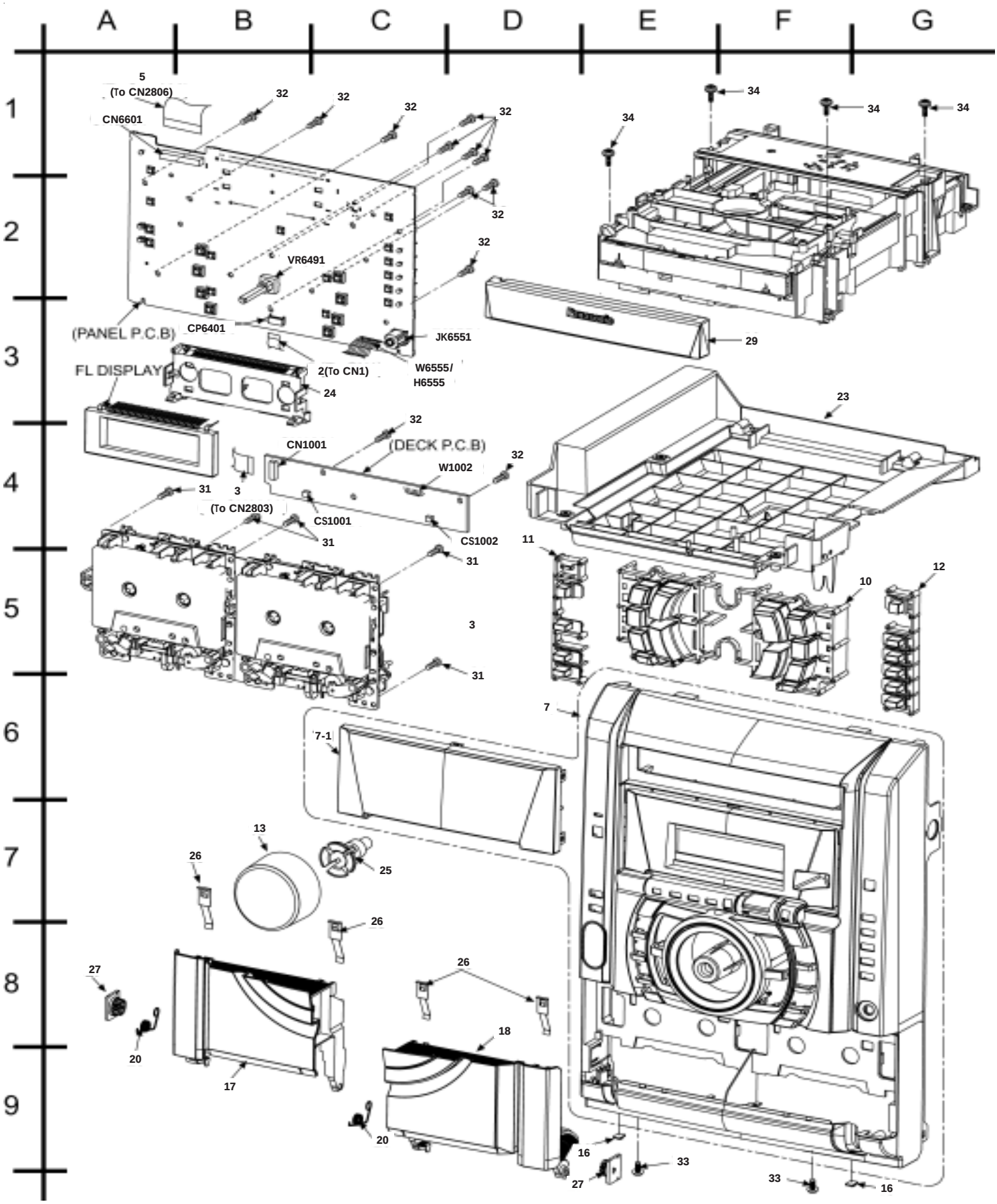

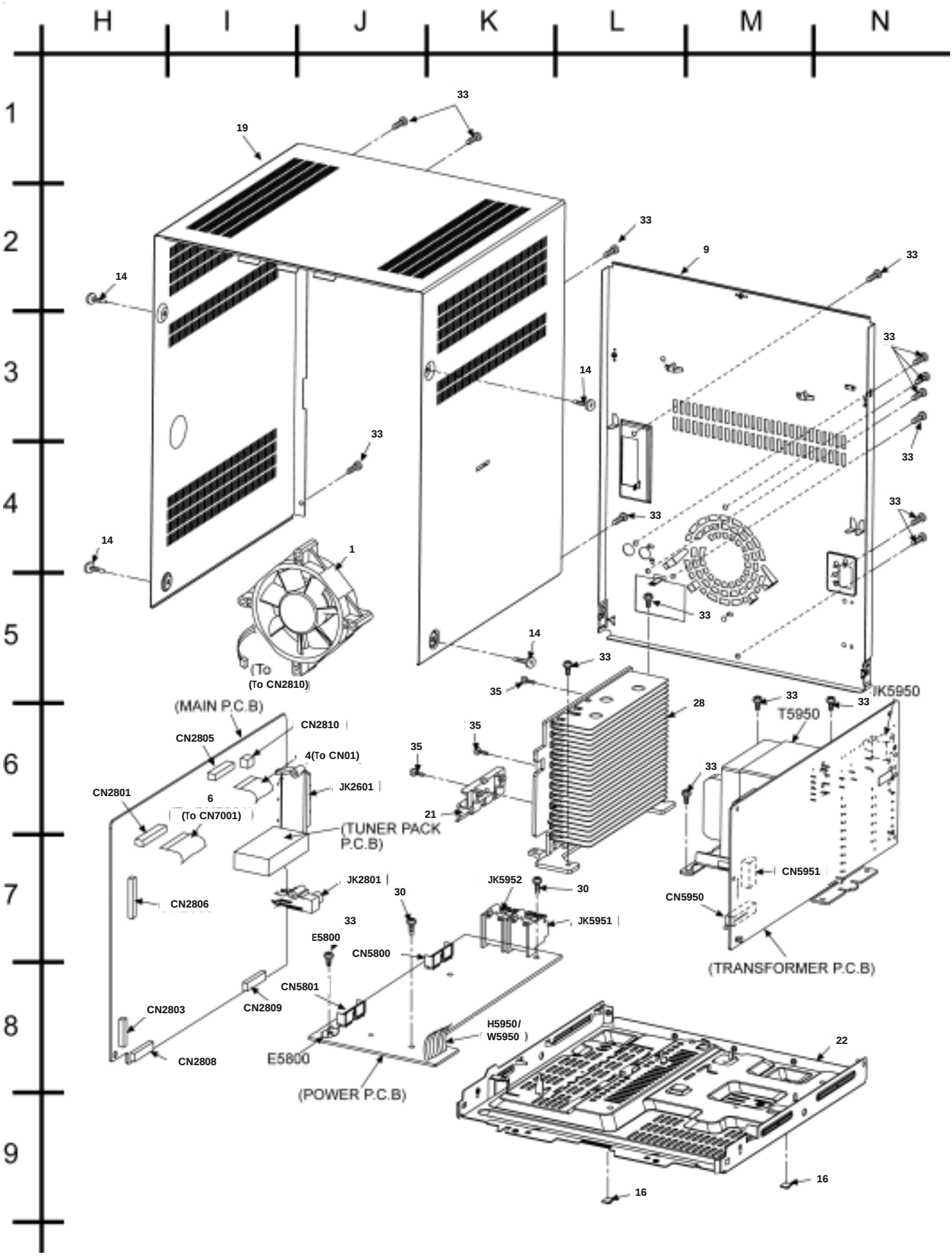
H
I
J
K
L
M
N
1
2
3
4
5
6
7
8
9
33
19
9
14
1
(To
(To CN2810)
(MAIN P.C.B)
CN2810
CN2805
4(To CN01)
JK2601
CN2801
6
(To CN7001)
(TUNER PACK
P.C.B)
JK2801
CN2806
CN2803
CN2809
CN2808
E5800
CN5800
CN5801
(POWER P.C.B)
30
JK5952
JK5951
H5950/
W5950
35
28
21
22
16
JK5950
T5950
CN5951
CN5950
(TRANSFORMER P.C.B)

23.3.2 Cabinet Parts List

Ref. No.	Part No.	Part Name & Description	Remarks
		CABINET AND CHASSIS	
1	L6FALEFH0030	FAN	(P)
2	REEX0202-2	10P FFC (PANEL)	(P)
3	REEX0211	14P FFC WIRE (DECK)	(P)
4	REEX0212-1	14P FFC WIRE	(P)
5	REEX0401	30P FFC (PANEL)	(P)
6	REEX0447	16P FFC WIRE	(P)
7	RYPM0186	FRONT PANEL ASS'Y	(P)
07-Ene	RKWX0239B-H	FL WINDOW	(P)
9	RGRX0042D-L	REAR PANEL	(P)
10	RGUX0593A-S	FUNCTION BUTTON	(P)
11	RGUX0594A-S	POWER/SSEQ BUTTON	(P)
12	RGUX0595-S	CD EJECT BTN/CONTROL	(P)
13	RGWX0072-S	VOLUME KNOB	(P)
14	RHD30004-2S	SCREW	(P)
16	RKA0072-KJ	LEG CUSHION	(P)
17	RYPM0184	CASS LID L	(P)
18	RYPM0185	CASS LID R	(P)
19	RYKM0040-1	TOP CABINET	(P)
20	RMBX0036	CASS OPEN SPRING	(P)
21	RMCX0021	TRANSISTOR CLIP	(P)
22	RMKX0099-LM1	BOTTOM CHASSIS	(P)
23	RMKX0100-SL	CD CHASSIS	(P)
24	RMNX0138-1	FL HOLDER	(P)
25	RMQX0128-1	VOL KNOB ADAPTOR	(P)
26	RUS757ZAA	CASS HALF SPRING	(P)
27	RXGX0002	DAMPER GEAR	(P)
28	RXXX0057-K	HEAT SINK UNIT	(P)
29	RYPM0181	CD LID UNIT	(P)
30	XTB3+10J-A	SCREW	(P)
31	XTB3+10JFZ-A	SCREW	(P)
32	XTBS26+10J-A	SCREW	(P)
33	XTBS3+8JFZ1	SCREW	(P)
34	XTW3+12T-A	SCREW	(P)
35	XTW3+15T-A	SCREW	(P)

Ref. No	Part No.	Part Name & Description
	CD-TM53A	CONJUNTO CD
	F-TM53A	CONJUNTO CHASSIS
	P-TM53A	CONJUNTO EMPAQUE
	RAA3412-P	NEW AR2W (VE)
	RAIM03815A	CONJUNTO TUNER PACK
	RAIM05234A	CONJ. DECK SA-TM53
	RAIM05530A	CONJ. TRANSF. SA-TM53
	RAIM05531A	CONJ. PODER
	RAIM05532A	CONJ. MAIN SA-TM53
	RAIM05533A	CONJ. PANEL SA-TM53
	REAM05234A	CONJ. SMT DECK SA-TM53
	REAM05531A	CONJ. SMT PODER SA-TM53
	REAM05532A	CONJ. SMT MAIN SA-TM53
	RED0071	UNIDAD DE CABEZAL R/P
	RED0072	UNIDAD DE CABEZAL P/B
	RENM03815A	CONJUNTO TUNER PACK RADIAL
	RENM03815AJ	CONJUNTO TUNER PACK JUMPER
	RENM03815AZ	CONJUNTO TUNER PACK AXIAL
	RENM05234A	CONJ. RADIAL DECK. SA-TM53
	RENM05234AJ	CONJ. JUMPER DECK
	RENM05234AZ	CONJ. AXIAL DECK
	RENM05530A	CONJ. RADIAL TRANS. SA-TM53
	RENM05530AJ	CONJ. JUMPER TRANS. SA-TM53
	RENM05530AZ	CONJ. AXIAL TRANS. SA-TM53
	RENM05531A	CONJ. RADIAL PODER SA-TM53
	RENM05531AJ	CONJ. JUMPER PODER SA-TM53
	RENM05531AZ	CONJ. AXIAL PODER SA-TM53
	RENM05532A	CONJ. RADIAL MAIN SA-TM53
	RENM05532AZ	CONJ. AXIAL MAIN SA-TM53
	RENM05532BJ	CONJUNTO JUMPER MAIN TM53
	RENM05533A	CONJ. RADIAL PANEL SA-TM53
	RENM05533AJ	CONJ. JUMPER PANEL SA-TM53
	RENM05533AZ	CONJ. AXIAL PANEL SA-TM53
	RENX0321BZ	PISTA DE INSERCION
	REPM03815A	CONJUNTO TUNER MANUAL
	REPM05234A	CONJ. MANUAL DECK SA-TM53
	REPM05530A	CONJ. MANUAL TRANSF. SA-TM53
	REPM05531A	CONJ. MANUAL PODER SA-TM53
	REPM05532A	CONJ. MANUAL MAIN SA-TM53
	REPM05533A	CONJUNTO PANEL SC-TM53
	REPX0321B	UNIDAD PCB R/P

CAPACITORS

C1	F1D1H5R6A017	CAPACITOR
C10	F1D1H180A015	CAPACITOR
C1002	ECEA1HKN2R2B	CAPACITOR
C1006	F2A1H1R0A015	CAPACITOR
C1007	F0A2A472A034	CAPACITOR
C1008	F2A1H1R0A015	CAPACITOR
C1009	F2A1C470A017	CAPACITOR
C1010	F2A1E101A122	CAPACITOR
C1011	ECQV1H473JZ3	CAPACITOR
C1012	ECJ1VB1H102K	CHIP CAPACITOR
C1013	ECJ1VB1H102K	CHIP CAPACITOR
C1014	ECJ1VB1H102K	CHIP CAPACITOR
C1015	ECJ1VB1H102K	CHIP CAPACITOR
C1016	ECJ1VB1H222K	CHIP CAPACITOR
C1017	ECJ1VB1H222K	CHIP CAPACITOR
C1018	ECJ1VB1H103K	CHIP CAPACITOR
C1019	ECJ1VB1H102K	CHIP CAPACITOR
C1020	ECJ1VB1H471K	CHIP CAPACITOR
C1021	ECJ1VB1H471K	CHIP CAPACITOR
C1022	ECJ1VB1H102K	CHIP CAPACITOR
C1023	ECJ1VB1H102K	CHIP CAPACITOR
C1026	F2A0J470A014	CAPACITOR
C1027	ECJ1VB1H102K	CHIP CAPACITOR
C1030	F2A1A1010020	CAPACITOR
C1031	ECA1AM101B	CAPACITOR
C1032	F1C1C183A023	CAPACITOR
C1033	F1C1C183A023	CAPACITOR
C1034	F2A1H3R3A015	CAPACITOR
C1035	F2A1H3R3A015	CAPACITOR
C1036	ECJ1VB1C333K	CAPACITOR CHIP
C1037	F2A1H3R3A015	CAPACITOR
C1038	ECJ1VB1H221K	CHIP CAPACITOR
C1039	ECJ1VB1H221K	CHIP CAPACITOR
C1040	F2A1C100A196	CAPACITOR
C1041	F2A1C100A196	CAPACITOR
C1042	F2A1C220A017	CAPACITOR
C1043	F2A1H4R70009	CAPACITOR
C1044	F2A1A330A011	CAPACITOR
C1045	F2A1A220A009	CAPACITOR
C1046	F2A1C221A019	CAPACITOR
C1049	ECJ1VB1H332K	CHIP CAPACITOR
C1050	ECJ1VB1H332K	CHIP CAPACITOR

C1056	F2A1C100A196	CAPACITOR
C1057	ECJ1VB1H102K	CHIP CAPACITOR
C1058	ECJ1VB1H102K	CHIP CAPACITOR
C1059	ECJ1VB1H103K	CHIP CAPACITOR
C11	F1D1H102A029	CAPACITOR
C2	F1D1H102A029	CAPACITOR
C2102	ECJ1VB1C104K	CAPACITOR
C2103	ECJ1VB1H102K	CHIP CAPACITOR
C2106	ECJ1VB1H332K	CHIP CAPACITOR
C2107	ECJ1VB1C104K	CAPACITOR
C2108	ECJ1VB1H102K	CHIP CAPACITOR
C2111	ECJ1VB1C104K	CAPACITOR
C2112	ECJ1VB1H152K	CAPACITOR
C2114	ECJ1VB1H103K	CHIP CAPACITOR
C2116	ECJ1VB1H681K	CHIP CAPACITOR
C2118	ECJ1VB1C104K	CAPACITOR
C2119	ECJ1VB1H102K	CHIP CAPACITOR
C2121	ECJ1VB1C104K	CAPACITOR
C2126	ECJ1VB1C104K	CAPACITOR
C2131	ECJ1VB1C224K	CHIP CAPACITOR
C2136	ECJ1VB1C224K	CHIP CAPACITOR
C2151	ECA1CAK100XB	CAPACITOR ELECTROLITICO
C2166	ECJ1VB1H102K	CHIP CAPACITOR
C2181	ECJ1VB1H822K	CAPACITOR
C2182	ECJ1VB1H822K	CAPACITOR
C2184	ECJ1VB1H152K	CAPACITOR
C2193	ECJ1VB1C104K	CAPACITOR
C2194	F2A1C100A196	CAPACITOR
C2202	ECJ1VB1C104K	CAPACITOR
C2203	ECJ1VB1H102K	CHIP CAPACITOR
C2206	ECJ1VB1H332K	CHIP CAPACITOR
C2207	ECJ1VB1C104K	CAPACITOR
C2208	ECJ1VB1H102K	CHIP CAPACITOR
C2211	ECJ1VB1C104K	CAPACITOR
C2212	ECJ1VB1H152K	CAPACITOR
C2214	ECJ1VB1H103K	CHIP CAPACITOR
C2216	ECJ1VB1H681K	CHIP CAPACITOR
C2218	ECJ1VB1C104K	CAPACITOR
C2219	ECJ1VB1H102K	CHIP CAPACITOR
C2221	ECJ1VB1C104K	CAPACITOR
C2226	ECJ1VB1C104K	CAPACITOR
C2231	ECJ1VB1A154K	CAPACITOR CHIP
C2236	ECJ1VB1C683K	CAPACITOR CHIP
C2245	ECA1CAK100XB	CAPACITOR ELECTROLITICO

C2251	ECA1CAK100XB	CAPACITOR ELECTROLITICO
C2266	ECJ1VB1H102K	CHIP CAPACITOR
C2281	ECJ1VB1H822K	CAPACITOR
C2282	ECJ1VB1H822K	CAPACITOR
C2284	ECJ1VB1H152K	CAPACITOR
C2293	ECJ1VB1C104K	CAPACITOR
C2294	F2A1C100A196	CAPACITOR
C2301	ECJ1VC1H100J	CHIP CAPACITOR
C2302	ECJ1VC1H470J	CAPACITOR
C2311	ECJ1VB1A184K	CHIP CAPACITOR
C2312	ECJ1VB1A154K	CAPACITOR CHIP
C2334	ECJ1VB1C224K	CHIP CAPACITOR
C2401	ECJ1VC1H100J	CHIP CAPACITOR
C2402	ECJ1VC1H470J	CAPACITOR
C2411	ECJ1VB1A184K	CHIP CAPACITOR
C2412	ECJ1VB1A154K	CAPACITOR CHIP
C2501	ECEA1HKN2R2B	CAPACITOR
C2512	ECJ1VB1A474K	CAPACITOR CHIP
C2513	ECJ1VB1C104K	CAPACITOR
C2520	ECJ1VB1H103K	CHIP CAPACITOR
C2521	ECJ1VB1H103K	CHIP CAPACITOR
C2526	ECJ1VB1H221K	CHIP CAPACITOR
C2551	ECA1CAK100XB	CAPACITOR ELECTROLITICO
C2553	ECJ1VB1H103K	CHIP CAPACITOR
C2556	ECJ1VB1H103K	CHIP CAPACITOR
C2557	ECJ1VB1H103K	CHIP CAPACITOR
C2558	ECJ1VB1A154K	CAPACITOR CHIP
C2559	ECJ1VC1H470J	CAPACITOR
C2581	ECA1AM330B	E. CAP
C2582	ECA1CM101B	CAPACITOR
C2583	ECJ1VB1C224K	CHIP CAPACITOR
C2584	ECJ1VB1H221K	CHIP CAPACITOR
C2585	ECJ1VB1H221K	CHIP CAPACITOR
C2588	ECJ1VB1C104K	CAPACITOR
C2601	ECJ1VB1H103K	CHIP CAPACITOR
C2602	F2A1C100A196	CAPACITOR
C2603	ECJ1VB1H103K	CHIP CAPACITOR
C2604	ECJ1VB1H102K	CHIP CAPACITOR
C2606	ECJ1VB1H103K	CHIP CAPACITOR
C2607	ECJ1VB1E473K	CAPACITOR CHIP
C2608	ECJ1VC1H080D	CHIP CAPACITOR
C2609	ECJ1VB1H102K	CHIP CAPACITOR
C2610	ECJ1VB1H103K	CHIP CAPACITOR
C2611	F2A1H4R70009	CAPACITOR

C2612	ECJ1VB1H103K	CHIP CAPACITOR
C2613	ECJ1VB1H102K	CHIP CAPACITOR
C2614	F2A1H3R3A015	CAPACITOR
C2615	F2A1H4R70009	CAPACITOR
C2616	ECJ1VB1C333K	CAPACITOR CHIP
C2617	ECJ1VB1H103K	CHIP CAPACITOR
C2618	ECJ1VB1H103K	CHIP CAPACITOR
C2619	F0A2A681A010	POLYPROPLYENE CAPACITOR
C2620	F2A1C100A196	CAPACITOR
C2621	F2A1HR47A015	CAPACITOR
C2622	F2A1H1R0A015	CAPACITOR
C2623	F2A1H1R0A015	CAPACITOR
C2625	F2A1C220A017	CAPACITOR
C2627	F2A1C220A017	CAPACITOR
C2629	ECA1CAK101XB	CAPACITOR ELECTROLITICO
C2630	ECA0JM101B	CAPACITOR
C2631	ECJ1VC1H151J	CHIP CAPACITOR
C2632	ECJ1VB1H102K	CHIP CAPACITOR
C2633	ECJ1VC1H120J	CAPACITOR CHIP
C2634	ECJ1VC1H120J	CAPACITOR CHIP
C2636	ECJ1VB1H102K	CHIP CAPACITOR
C2637	ECJ1VB1H332K	CHIP CAPACITOR
C2638	ECJ1VB1H103K	CHIP CAPACITOR
C2639	F2A1H4R70009	CAPACITOR
C2641	F2A1H1R0A015	CAPACITOR
C2642	F2A1H1R0A015	CAPACITOR
C2647	ECJ1VB1H102K	CHIP CAPACITOR
C2648	ECJ1VB1H103K	CHIP CAPACITOR
C2649	ECJ1VF1C104Z	CHIP CAPACITOR
C2701	ECJ1VB1H103K	CHIP CAPACITOR
C2705	ECA1CAK100XB	CAPACITOR ELECTROLITICO
C2706	ECJ1VB1H103K	CHIP CAPACITOR
C2707	ECEA1AKN100B	CAPACITOR
C2708	ECA1CM101B	CAPACITOR
C2751	ECJ1VB1C104K	CAPACITOR
C2753	ECJ1VB1C104K	CAPACITOR
C2831	ECJ1VB1C223K	CAPACITOR
C2832	ECJ1VB1H331K	CHIP CAPACITOR
C2833	ECJ1VB1H331K	CHIP CAPACITOR
C2840	ECJ1VC1H180J	CHIP CAPACITOR
C2841	ECJ1VC1H180J	CHIP CAPACITOR
C2851	ECJ1VB1C104K	CAPACITOR
C2852	ECA1CM101B	CAPACITOR
C2853	ECJ1VB1C104K	CAPACITOR

C2854	ECA1CM101B	CAPACITOR
C2857	F2A1H2R2A015	CAPACITOR
C2901	ECJ1VB1C104K	CAPACITOR
C2902	ECA1CAK100XB	CAPACITOR ELECTROLITICO
C2903	ECJ1VB1H103K	CHIP CAPACITOR
C2904	ECA1CM101B	CAPACITOR
C2905	ECA1CM101B	CAPACITOR
C2906	ECJ1VB1H102K	CHIP CAPACITOR
C2907	ECJ1VB1H471K	CHIP CAPACITOR
C2936	ECJ1VF1C474Z	CAPACITOR
C2951	ECJ1VB1H103K	CHIP CAPACITOR
C2952	ECJ1VB1H103K	CHIP CAPACITOR
C2976	ECA1CAK100XB	CAPACITOR ELECTROLITICO
C2977	ECA1AM101B	CAPACITOR
C2998	ECJ1VB1C104K	CAPACITOR
C2999	ECJ1VB1C104K	CAPACITOR
C3	F1D1H2R2A017	CAPACITOR
C4	F1D1H181A012	CAPACITOR
C5	F1D1H5R6A017	CAPACITOR
C5015	ECJ1VB1H103K	CHIP CAPACITOR
C5018	ECA2AM100B	CAPACITOR ELECTROLITICO
C5019	ECA2AM100B	CAPACITOR ELECTROLITICO
C5077	ECJ1VC1H390K	CHIP CAPACITOR
C5240	ECJ1VB1H222K	CHIP CAPACITOR
C5241	ECJ1VC1H390K	CHIP CAPACITOR
C5242	ECJ1VB1H222K	CHIP CAPACITOR
C5243	ECJ1VC1H390K	CHIP CAPACITOR
C5244	ECJ1VB1H104K	CAPACITOR CHIP
C5245	ECJ1VB1H104K	CAPACITOR CHIP
C5249	ECJ1VB1H104K	CAPACITOR CHIP
C5250	ECJ1VB1H104K	CAPACITOR CHIP
C5440	ECJ1VB1H222K	CHIP CAPACITOR
C5441	ECJ1VC1H390K	CHIP CAPACITOR
C5442	ECJ1VB1H222K	CHIP CAPACITOR
C5443	ECJ1VC1H390K	CHIP CAPACITOR
C5444	ECJ1VB1H104K	CAPACITOR CHIP
C5445	ECJ1VB1H104K	CAPACITOR CHIP
C5449	ECJ1VB1H104K	CAPACITOR CHIP
C5450	ECJ1VB1H104K	CAPACITOR CHIP
C5658	ECJ1VB1H222K	CHIP CAPACITOR
C5660	ECJ1VB1H104K	CAPACITOR CHIP
C5662	ECJ1VB1H104K	CAPACITOR CHIP
C5758	ECJ1VB1H222K	CHIP CAPACITOR
C5760	ECJ1VB1H104K	CAPACITOR CHIP

C5762	ECJ1VB1H104K	CAPACITOR CHIP
C5777	ECJ1VC1H390K	CHIP CAPACITOR
C5801	ECJ1VB1H103K	CHIP CAPACITOR
C5802	ECEA0JKA221B	CAPACITOR
C5803	ECJ1VB1H102K	CHIP CAPACITOR
C5804	ECJ1VB1H103K	CHIP CAPACITOR
C5805	ECA1CM101B	CAPACITOR
C5806	ECJ1VB1H103K	CHIP CAPACITOR
C5807	F2A1C100A196	CAPACITOR
C5808	F2A1C100A196	CAPACITOR
C5809	ECJ1VB1H103K	CHIP CAPACITOR
C5810	F2A1E101A122	CAPACITOR
C5811	ECJ1VB1H103K	CHIP CAPACITOR
C5812	ECEA1EKA330B	CAPACITOR ELECTROLITICO
C5813	ECEA1EKA100B	CAPACITOR ELECTROLITICO
C5820	ECA1HM222B	CAPACITOR
C5838	F2A1H2R2A015	CAPACITOR
C5840	ECA1HM222B	CAPACITOR
C5864	ECJ1VB1H103K	CHIP CAPACITOR
C5950	ECA1CM222B	CAPACITOR ELECTROLITICO
C5951	F1B1H1030003	CAPACITOR
C5952	F2A1H470A147	CAPACITOR
C5953	F1B1H1030003	CAPACITOR
C5954	F1B1H1030003	CAPACITOR
C5955	ECA1HAK220XB	CAPACITOR
C5956	F2A1H470A147	CAPACITOR
C5957	ECA1HM100B	C.ELECTROLITICO
C5958	F1B1H1030003	CAPACITOR
C5959	F1B1H1030003	CAPACITOR
C5960	ECQE2104KF3	CAPACITOR PP
C5961	ECA1AM471B	CAPACITOR ELECTROLITICO
C5962	ECA1AM471B	CAPACITOR ELECTROLITICO
C5963	ECEA1VKA4R7B	CAPACITOR ELECTROLITICO
C6	F1D1H3R3A017	CAPACITOR
C6481	F2A0J470A014	CAPACITOR
C6491	F1D1H101A012	CAPACITOR CERAMICO
C6492	F1D1H101A012	CAPACITOR CERAMICO
C6502	F2A1HR10A015	CAPACITOR
C6504	F2A1HR10A015	CAPACITOR
C6508	F2A1A1010020	CAPACITOR
C6509	F2A1H1R0A015	CAPACITOR
C6510	F2A1H1R0A015	CAPACITOR
C6551	F1D1E103A001	CAPACITOR
C6552	F1D1E103A001	CAPACITOR

C6553	F1D1E103A001	CAPACITOR
C6601	F1D1H101A012	CAPACITOR CERAMICO
C6602	F1D1H101A012	CAPACITOR CERAMICO
C6603	F1D1H101A012	CAPACITOR CERAMICO
C6604	F1D1H101A012	CAPACITOR CERAMICO
C6612	F1D1H330A006	CAPACITOR CERAMICO
C6621	F1D1H101A012	CAPACITOR CERAMICO
C6623	F2A0J470A014	CAPACITOR
C6631	ECEA1VKA220B	CAPACITOR
C6632	ECEA1VKA220B	CAPACITOR
C6635	F2A1H3R3A015	CAPACITOR
C6636	F1D1H101A012	CAPACITOR CERAMICO
C7	F1D1H4R7A017	CAPACITOR
C8	F1D1H3R3A017	CAPACITOR
C9	F1D1H2R2A017	CAPACITOR

CERAMIC FILTERS

CF2601	J0B1075A0061	CRISTAL CERAMICO
CF2602	J0B1075A0061	CRISTAL CERAMICO

CONNECTORS

CN1001	K1MN14B00058	CONECTOR
CN2801	RJS1A9416-1	CONECTOR 16P
CN2803	RJS1A9414-1	CONECTOR FFC 14P
CN2805	RJS1A9414-1	CONECTOR FFC 14P
CN2806	K1MN36A00005	36 PIN CONNECTOR
CN2808	K1KB12B00036	P2 MO CONNECTOR (12 LOC)
CN2809	K1KB12B00036	P2 MO CONNECTOR (12 LOC)
CN2810	K1KA02A00008	CONNECTOR
CN5800	K1KA12A00184	P2 MQ CONNECTOR (12P)
CN5801	K1KA12A00184	P2 MQ CONNECTOR (12P)
CN5803	RJT119W09V	9 PIN CONNECTOR
CN5950	K1KA09A00227	9P CONNECTOR
CN5951	K1KA09A00150	9P PLUG IN CONECTOR
CN6601	K1MN36A00005	36 PIN CONNECTOR
CN971	K1MN10B00104	10P FFC CONNECTOR
CP6401	K1MN10B00104	10P FFC CONNECTOR
CS1001	RJS1A6805-J	CONECTOR 5P
CS1002	RJS1A6805-J	CONECTOR 5P

DIODES

D1	SVC211SPA-AL	DIODO
D1003	B0ACCK000005	CHIP DIODE
D1004	B0BC3R700004	DIODO
D2	SVC211SPA-AL	DIODO
D2241	B0ACCK000005	CHIP DIODE
D2332	B0ADCC000002	DUAL CHIP DIODE
D2512	B0JCAE000001	BARRIER DIODE
D2551	B0BC2R4A0006	DIODO ZENER
D2552	B0BC2R4A0006	DIODO ZENER
D2601	B0BC5R000009	CHIP ZENER DIODE
D2602	B0CDBB000015	CHIP DIODE
D2703	B0ACCK000005	CHIP DIODE
D2704	B0ACCK000005	CHIP DIODE
D2705	B0ACCK000005	CHIP DIODE
D2802	B0ADCJ000020	DUAL CHIP DIODE
D2804	B0ACCK000005	CHIP DIODE
D2811	B0ADCJ000020	DUAL CHIP DIODE
D2813	B0ACCK000005	CHIP DIODE
D2901	B0ADCC000002	DUAL CHIP DIODE
D2904	B0EAKM000117	DIODO
D2936	B0EAKM000117	DIODO
D2951	B0BC7R500001	CHIP DIODE
D3	SVC211SPA-AL	DIODO
D5003	B0BC01500006	15V ZENER DIODE
D5801	B0BC01000014	DIODO
D5802	B0BC01500006	15V ZENER DIODE
D5803	B0BC01500006	15V ZENER DIODE
D5804	B0ACCK000005	CHIP DIODE
D5805	B0EAKM000117	DIODO
D5807	B0EAKM000117	DIODO
D5808	B0BC5R600003	CHIP DIODO
D5809	B0BC01000014	DIODO
D5813	B0ACCK000005	CHIP DIODE
D5814	B0ACCK000005	CHIP DIODE
D5820	B0BC01500006	15V ZENER DIODE
D5950	B0EAMM000038	DIODO RECTIFICADOR
D5951	B0EAMM000038	DIODO RECTIFICADOR
D5952	B0EAMM000038	DIODO RECTIFICADOR
D5953	B0EAMM000038	DIODO RECTIFICADOR
D5954	B0EAKM000117	DIODO
D5955	B0EAKM000117	DIODO
D5956	B0EAKM000117	DIODO
D5957	B0EAKM000117	DIODO
D5958	B0EAKM000117	DIODO

D5959	B0EAKM000117	DIODO
D5960	B0BA03100002	ZENER DIODE
D5961	B0EAKM000117	DIODO
D5962	B0EAKM000117	DIODO
D5963	B0EAKM000117	DIODO
D5964	B0BA6R600008	ZENER DIODE
D5965	B0AACK000004	DIODE
D5966	B0EAKM000117	DIODO
D5970	B0EAMM000038	DIODO RECTIFICADOR
D5971	B0EAMM000038	DIODO RECTIFICADOR
D5972	B0EAMM000038	DIODO RECTIFICADOR
D5973	B0EAMM000038	DIODO RECTIFICADOR
D6635	B0BA7R000005	DIODO
D951	MA2C16500E	DIODE
D971	MA2C16500E	DIODE

EARTH TERMINAL

E5800	SNE1004-2	TERMINAL DE TIERRA

FUSE HOLDERS

FC5901	EYF52BC	FUSIBLE TERMINAL
FC5902	EYF52BC	FUSIBLE TERMINAL

DISPLAY TUBE

FL6601	A2BD00000110	FL DISPLAY FOR TM53

FUSE

F1	K5D402APA008	FUSE 4A
FP5833	K5G401A00008	FUSIBLE
FP5950	K5G402A00025	FUSIBLE
FP5951	K5G102A00039	FUSIBLE

HOLDERS

H5004	RJS1A5509	AP WIRE HOLDER
W5950	RJS1A5509	AP WIRE HOLDER

JACKS

H6555	K1YZ09000002	JACK
JK2601	K4BC03A00009	ANTENNA JACK
JK2801	K2HA204B0153	2 PIN RCA JACK
JK5851	K4BC04B00078	CONECTORDEBAFLE
JK5852	K4BC06B00046	CONECTORDEBAFLE
JK5950	K2AA2B000004	AC IN
JK6551	K2HC103A0023	CONECTOR DE BAFLES

INTEGRATED CIRCUITS

	C-BTM43LA	SET COMPLETO (L)
	C-BTM43RA	SET COMPLETO (R)
IC1004	C1AA00000612	SWIC
IC2601	C1BB00000962	IC PREAMPLIFICADOR
IC2602	C1CB00001937	IC PLL
IC2801	C2CBJG000561	MICRO P. FOR TM63
IC2802	C3EBDG000052	IC
IC2803	C1BB00000732	ASP IC
IC2804	C0AABA000009	AMPLIFICADOR OPERACIONAL
IC2805	C0ABBB000244	SMT DUAL OP-AMP IC
IC2806	C0ABBB000244	SMT DUAL OP-AMP IC
IC2810	C0ABBB000244	SMT DUAL OP-AMP IC
IC5002	RSN35H2B-P	HIC
IC5801	RSN315H42C-P	HIC
IC6601	C0HBB0000039	FL DRIVE IC
IC951	CNB13030R2AU	FOTOACOPLADOR
IC971	CNB13030R2AU	FOTOACOPLADOR
IC1001	AN7348S-E1	TAPE PB IC

COILS & TRANSFORMERS

L1	RLQZP1R2KT-Y	BOBINA AXIAL
L1001	G0C470JA0052	INDUCTOR
L1002	7L1A62N	BOBINA DE OSCILACION
L2	RLQZPR47KT-Y	BOBINA AXIAL
L2601	GNS-A0882DC	BOBINA AM
L2602	G2BPC0000016	OSCILLATOR COIL

Q1	2SK544F-AC	TRANSISTOR
Q1003	B1AAGC000007	TRANSISTOR
Q1004	B1AAGC000007	TRANSISTOR
Q1005	B1AAGC000007	TRANSISTOR
Q1007	B1ABCF000131	TRANSISTOR CHIP
Q1017	B1AARC000002	TRANSISTOR RADIAL
Q2	2SC2786MTA	TRANSISTOR
Q2142	B1ABCF000131	TRANSISTOR CHIP
Q2181	B1ABCF000131	TRANSISTOR CHIP
Q2242	B1ABCF000131	TRANSISTOR CHIP
Q2281	B1ABCF000131	TRANSISTOR CHIP
Q2501	B1GDCFJJ0023	TRANSISTOR
Q2511	B1GDCFJJ0023	TRANSISTOR
Q2512	B1ABCF000131	TRANSISTOR CHIP
Q2551	B1GDCFJJ0023	TRANSISTOR
Q2552	B1GDCFJJ0023	TRANSISTOR
Q2553	B1ABCF000131	TRANSISTOR CHIP
Q2554	B1ABCF000131	TRANSISTOR CHIP
Q2571	B1GFGCAA0001	CHIP TRANSISTOR
Q2601	B1AABC000003	TRANSISTOR
Q2606	B1GCCFJJ0015	TRANSISTORRADIAL
Q2701	2SD0592ARA	TRANSISTOR
Q2704	2SB0709AHL	TRANSISTOR CHIP
Q2705	2SB0709AHL	TRANSISTOR CHIP
Q2706	2SD0601AHL	TRANSISTOR CHIP
Q2806	B1GBCFJJ0039	TRANSISTORCHIP
Q2901	B1ACKD000004	TRANSISTOR
Q2902	B1AACF000064	TRANSISTOR
Q2906	B1ABCF000131	TRANSISTOR CHIP
Q2907	B1ABCF000131	TRANSISTOR CHIP
Q2936	B1ACKD000004	TRANSISTOR
Q2937	B1GBCFJJ0039	TRANSISTORCHIP
Q2978	B1GDCFJJ0023	TRANSISTOR
Q2980	B1GDCFJJ0023	TRANSISTOR
Q3	2SC2787FL1TA	TRANSISTOR
Q4	2SC2787FL1TA	TRANSISTOR
Q5801	B1BACG000023	TRANSISTOR
Q5802	B1BCCG000002	TRANSISTOR
Q5803	B1BACG000023	TRANSISTOR
Q5804	B1BCCG000002	TRANSISTOR
Q5805	B1ACCF000063	TRANSISTOR RADIAL
Q5806	B1GDCFGA0014	TRANSISTOR
Q5807	B1ABCF000131	TRANSISTOR CHIP
Q5808	B1BACD000017	TRANSISTOR RADIAL
Q5812	B1ABCF000131	TRANSISTOR CHIP
Q5813	B1ABCF000131	TRANSISTOR CHIP
Q5814	B1ABCF000131	TRANSISTOR CHIP
Q5950	B1BACD000017	TRANSISTOR RADIAL
Q5951	2SB0621AHA	TRANSISTOR

Q5952	B1GACFJJ0016	TRANSISTOR
Q5953	B1AACF000064	TRANSISTOR
Q6411	B1ACKD000004	TRANSISTOR
Q6415	B1ACKD000004	TRANSISTOR
Q6421	B1GACFLL0007	TRANSISTOR
Q6425	B1GACFLL0007	TRANSISTOR
Q6451	KRC103MTA	TRANSISTOR
Q6452	KRC103MTA	TRANSISTOR
Q6453	KRC103MTA	TRANSISTOR
Q6454	KRC103MTA	TRANSISTOR
Q6455	KRC103MTA	TRANSISTOR
Q6456	B1GACFLL0007	TRANSISTOR
Q6457	B1GACFLL0007	TRANSISTOR

RESISTORS

C2117	ECJ1VC1H101K	CHIP RESISTOR
C2217	ECJ1VC1H101K	CHIP RESISTOR
C2511	F1H1H223A761	CHIP RESISTOR
C2552	ECJ1VC1H101K	CHIP RESISTOR
C2555	ECJ1VC1H101K	CHIP RESISTOR
C2624	ECJ1VC1H101K	CHIP RESISTOR
C2643	ECJ1VB1H682K	CHIP RESISTOR
C2644	ECJ1VB1H682K	CHIP RESISTOR
C2811	ECJ1VC1H101K	CHIP RESISTOR
C2812	ECJ1VC1H101K	CHIP RESISTOR
C2813	ECJ1VC1H101K	CHIP RESISTOR
C2814	ECJ1VC1H101K	CHIP RESISTOR
C2815	ECJ1VC1H101K	CHIP RESISTOR
C2816	ECJ1VC1H101K	CHIP RESISTOR
C2817	ECJ1VC1H101K	CHIP RESISTOR
C2818	ECJ1VC1H101K	CHIP RESISTOR
C2819	ECJ1VC1H101K	CHIP RESISTOR
C2820	ECJ1VC1H101K	CHIP RESISTOR
C2821	ECJ1VC1H101K	CHIP RESISTOR
R1	ERDS2TJ104T	RESISTENCIA
R10	ERDS2TJ391T	RESISTENCIA CARBON
R1001	ERJ3GEYJ1R0V	RESISTENCIA CHIP PELÖCULA
R1003	ERJ3GEYJ103V	RESISTENCIA CHIP PELÖCULA
R1004	ERJ3GEYJ152V	RESISTENCIA CHIP PELÖCULA
R1005	ERJ3GEYJ472V	RESISTENCIA CHIP PELÖCULA
R1007	ERD25FVJ4R7T	RESISTENCIA
R1009	ERJ3GEYJ183V	RESISTENCIA CHIP PELÖCULA
R1010	ERJ3GEYJ183V	RESISTENCIA CHIP PELÖCULA

R1011	ERJ3GEYJ103V	RESISTENCIA CHIP PELÖCULA
R1012	ERJ3GEYJ472V	RESISTENCIA CHIP PELÖCULA
R1013	ERJ3GEYJ472V	RESISTENCIA CHIP PELÖCULA
R1014	ERJ3GEYJ472V	RESISTENCIA CHIP PELÖCULA
R1015	ERJ3GEYJ470V	RESISTENCIA CHIP PELÖCULA
R1016	ERJ3GEYJ470V	RESISTENCIA CHIP PELÖCULA
R1017	ERJ3GEYJ822V	RESISTENCIA CHIP PELÖCULA
R1018	ERJ3GEYJ392V	RESISTENCIA CHIP PELÖCULA
R1019	ERJ3GEYJ392V	RESISTENCIA CHIP PELÖCULA
R1022	ERJ3GEYJ103V	RESISTENCIA CHIP PELÖCULA
R1026	ERJ3GEYJ102V	RESISTENCIA CHIP PELÖCULA
R1028	ERJ3GEYJ822V	RESISTENCIA CHIP PELÖCULA
R1029	ERJ3GEYJ475V	RESISTENCIA CHIP PELÖCULA
R1030	ERJ3GEYJ101V	RESISTENCIA CHIP PELÖCULA
R1031	ERJ3GEYJ273V	RESISTENCIA CHIP PELÖCULA
R1032	ERJ3GEYJ103V	RESISTENCIA CHIP PELÖCULA
R1035	ERJ3GEYJ103V	RESISTENCIA CHIP PELÖCULA
R1055	ERJ3GEYJ222V	RESISTENCIA CHIP PELÖCULA
R1057	ERJ3GEYJ222V	RESISTENCIA CHIP PELÖCULA
R1060	ERJ3GEYJ391V	RESISTENCIA CHIP PELÖCULA
R1084	ERJ3GEYJ222V	RESISTENCIA CHIP PELÖCULA
R1085	ERJ3GEYJ473V	RESISTENCIA CHIP PELÖCULA
R1086	ERJ3GEYJ222V	RESISTENCIA CHIP PELÖCULA
R1087	ERJ3GEYJ473V	RESISTENCIA CHIP PELÖCULA
R1090	ERJ3GEYJ221V	RESISTENCIA CHIP PELÖCULA
R1097	ERJ3GEYJ103V	RESISTENCIA CHIP PELÖCULA
R1098	ERJ3GEYJ103V	RESISTENCIA CHIP PELÖCULA
R11	ERDS2TJ684T	RESISTENCIA CARBON
R2	ERDS2TJ104T	RESISTENCIA
R2101	ERJ3GEYJ122V	RESISTENCIA CHIP PELÖCULA
R2102	ERJ3GEYJ182V	RESISTENCIA CHIP PELÖCULA
R2103	ERJ3GEYJ682V	RESISTENCIA CHIP PELÖCULA
R2106	ERJ3GEYJ101V	RESISTENCIA CHIP PELÖCULA
R2107	ERJ3GEYJ473V	RESISTENCIA CHIP PELÖCULA
R2108	ERJ3GEYJ682V	RESISTENCIA CHIP PELÖCULA
R2111	ERJ3GEYJ103V	RESISTENCIA CHIP PELÖCULA
R2112	ERJ3GEYJ223V	RESISTENCIA CHIP PELÖCULA
R2113	ERJ3GEYJ103V	RESISTENCIA CHIP PELÖCULA
R2116	ERJ3GEYJ123V	RESISTENCIA CHIP PELÖCULA
R2117	ERJ3GEYJ272V	RESISTENCIA CHIP PELÖCULA
R2118	ERJ3GEYJ103V	RESISTENCIA CHIP PELÖCULA
R2141	ERJ3GEYJ272V	RESISTENCIA CHIP PELÖCULA
R2142	ERJ3GEYJ223V	RESISTENCIA CHIP PELÖCULA
R2143	ERJ3GEYJ104V	RESISTENCIA CHIP PELÖCULA

R2145	ERJ3GEYJ103V	RESISTENCIA CHIP PELÖCULA
R2146	ERJ3GEYJ102V	RESISTENCIA CHIP PELÖCULA
R2149	ERJ3GEYJ222V	RESISTENCIA CHIP PELÖCULA
R2154	ERJ3GEYJ104V	RESISTENCIA CHIP PELÖCULA
R2166	ERJ3GEYJ330V	RESISTENCIA CHIP
R2167	ERJ3GEYJ330V	RESISTENCIA CHIP
R2168	ERJ3GEYJ330V	RESISTENCIA CHIP
R2169	ERJ3GEYJ330V	RESISTENCIA CHIP
R2170	ERJ3GEYJ1R0V	RESISTENCIA CHIP PELÖCULA
R2171	ERJ3GEYJ332V	RESISTENCIA CHIP PELÖCULA
R2181	ERJ3GEYJ332V	RESISTENCIA CHIP PELÖCULA
R2182	ERJ3GEYJ183V	RESISTENCIA CHIP PELÖCULA
R2183	ERJ3GEYJ562V	RESISTENCIA CHIP PELÖCULA
R2184	ERJ3GEYJ332V	RESISTENCIA CHIP PELÖCULA
R2191	ERJ3GEYJ102V	RESISTENCIA CHIP PELÖCULA
R2193	ERJ3GEYJ104V	RESISTENCIA CHIP PELÖCULA
R2196	ERJ3GEYJ123V	RESISTENCIA CHIP PELÖCULA
R2197	ERJ3GEYJ102V	RESISTENCIA CHIP PELÖCULA
R2201	ERJ3GEYJ122V	RESISTENCIA CHIP PELÖCULA
R2202	ERJ3GEYJ182V	RESISTENCIA CHIP PELÖCULA
R2206	ERJ3GEYJ101V	RESISTENCIA CHIP PELÖCULA
R2207	ERJ3GEYJ473V	RESISTENCIA CHIP PELÖCULA
R2211	ERJ3GEYJ103V	RESISTENCIA CHIP PELÖCULA
R2212	ERJ3GEYJ223V	RESISTENCIA CHIP PELÖCULA
R2216	ERJ3GEYJ123V	RESISTENCIA CHIP PELÖCULA
R2217	ERJ3GEYJ272V	RESISTENCIA CHIP PELÖCULA
R2241	ERJ3GEYJ272V	RESISTENCIA CHIP PELÖCULA
R2242	ERJ3GEYJ223V	RESISTENCIA CHIP PELÖCULA
R2243	ERJ3GEYJ104V	RESISTENCIA CHIP PELÖCULA
R2245	ERJ3GEYJ103V	RESISTENCIA CHIP PELÖCULA
R2246	ERJ3GEYJ102V	RESISTENCIA CHIP PELÖCULA
R2247	ERJ3GEYJ104V	RESISTENCIA CHIP PELÖCULA
R2248	ERJ3GEYJ472V	RESISTENCIA CHIP PELÖCULA
R2249	ERJ3GEYJ222V	RESISTENCIA CHIP PELÖCULA
R2254	ERJ3GEYJ104V	RESISTENCIA CHIP PELÖCULA
R2266	ERJ3GEYJ330V	RESISTENCIA CHIP
R2267	ERJ3GEYJ330V	RESISTENCIA CHIP
R2268	ERJ3GEYJ330V	RESISTENCIA CHIP
R2269	ERJ3GEYJ330V	RESISTENCIA CHIP
R2270	ERJ3GEYJ1R0V	RESISTENCIA CHIP PELÖCULA
R2271	ERJ3GEYJ332V	RESISTENCIA CHIP PELÖCULA
R2281	ERJ3GEYJ332V	RESISTENCIA CHIP PELÖCULA
R2282	ERJ3GEYJ183V	RESISTENCIA CHIP PELÖCULA
R2283	ERJ3GEYJ562V	RESISTENCIA CHIP PELÖCULA

R2284	ERJ3GEYJ332V	RESISTENCIA CHIP PELÖCULA
R2291	ERJ3GEYJ102V	RESISTENCIA CHIP PELÖCULA
R2293	ERJ3GEYJ104V	RESISTENCIA CHIP PELÖCULA
R2296	ERJ3GEYJ123V	RESISTENCIA CHIP PELÖCULA
R2297	ERJ3GEYJ102V	RESISTENCIA CHIP PELÖCULA
R2301	ERJ3GEYJ473V	RESISTENCIA CHIP PELÖCULA
R2302	ERJ3GEYJ153V	RESISTENCIA CHIP PELÖCULA
R2303	ERJ3GEYJ334V	RESISTENCIA CHIP
R2304	ERJ3GEYJ823V	RESISTENCIA CHIP PELÖCULA
R2315	ERJ3GEYJ683V	RESISTENCIA CHIP PELÖCULA
R2316	ERJ3GEYJ472V	RESISTENCIA CHIP PELÖCULA
R2316	ERJ3GEYJ472V	RESISTENCIA CHIP PELÖCULA
R2317	ERJ3GEYJ104V	RESISTENCIA CHIP PELÖCULA
R2318	ERJ3GEYJ272V	RESISTENCIA CHIP PELÖCULA
R2332	ERJ3GEYJ393V	RESISTENCIA CHIP PELÖCULA
R2337	ERJ3GEYJ474V	RESISTENCIA CHIP PELÖCULA
R2338	ERJ3GEYJ102V	RESISTENCIA CHIP PELÖCULA
R2339	ERJ3GEYJ222V	RESISTENCIA CHIP PELÖCULA
R2401	ERJ3GEYJ473V	RESISTENCIA CHIP PELÖCULA
R2402	ERJ3GEYJ153V	RESISTENCIA CHIP PELÖCULA
R2403	ERJ3GEYJ334V	RESISTENCIA CHIP
R2404	ERJ3GEYJ823V	RESISTENCIA CHIP PELÖCULA
R2412	ERJ3GEYJ683V	RESISTENCIA CHIP PELÖCULA
R2412	ERJ3GEYJ683V	RESISTENCIA CHIP PELÖCULA
R2413	ERJ3GEYJ683V	RESISTENCIA CHIP PELÖCULA
R2413	ERJ3GEYJ683V	RESISTENCIA CHIP PELÖCULA
R2414	ERJ3GEYJ103V	RESISTENCIA CHIP PELÖCULA
R2414	ERJ3GEYJ103V	RESISTENCIA CHIP PELÖCULA
R2415	ERJ3GEYJ683V	RESISTENCIA CHIP PELÖCULA
R2415	ERJ3GEYJ683V	RESISTENCIA CHIP PELÖCULA
R2416	ERJ3GEYJ472V	RESISTENCIA CHIP PELÖCULA
R2417	ERJ3GEYJ104V	RESISTENCIA CHIP PELÖCULA
R2418	ERJ3GEYJ272V	RESISTENCIA CHIP PELÖCULA
R2439	ERJ3GEYJ222V	RESISTENCIA CHIP PELÖCULA
R2501	ERJ3GEYJ222V	RESISTENCIA CHIP PELÖCULA
R2502	ERJ3GEYJ563V	RESISTENCIA CHIP PELÖCULA
R2503	ERJ3GEYJ154V	RESISTENCIA CHIP PELÖCULA
R2511	ERJ3GEYJ224V	RESISTENCIA CHIP
R2513	ERJ3GEYJ472V	RESISTENCIA CHIP PELÖCULA
R2514	ERJ3GEYJ104V	RESISTENCIA CHIP PELÖCULA
R2515	ERJ3GEYJ822V	RESISTENCIA CHIP PELÖCULA
R2516	ERJ3GEYJ102V	RESISTENCIA CHIP PELÖCULA
R2517	ERJ3GEYJ104V	RESISTENCIA CHIP PELÖCULA
R2518	ERJ3GEYJ104V	RESISTENCIA CHIP PELÖCULA

R2519	ERJ3GEYJ472V	RESISTENCIA CHIP PELÖCULA
R2520	ERJ3GEYJ103V	RESISTENCIA CHIP PELÖCULA
R2521	ERJ3GEYJ103V	RESISTENCIA CHIP PELÖCULA
R2522	ERJ3GEYJ103V	RESISTENCIA CHIP PELÖCULA
R2523	ERJ3GEYJ104V	RESISTENCIA CHIP PELÖCULA
R2524	ERJ3GEYJ102V	RESISTENCIA CHIP PELÖCULA
R2525	ERJ3GEYJ104V	RESISTENCIA CHIP PELÖCULA
R2527	ERJ3GEYJ102V	RESISTENCIA CHIP PELÖCULA
R2533	ERJ3GEYJ103V	RESISTENCIA CHIP PELÖCULA
R2534	ERJ3GEYJ152V	RESISTENCIA CHIP PELÖCULA
R2535	D0GB333JA002	CHIP RESISTOR
R2537	ERJ3GEYJ102V	RESISTENCIA CHIP PELÖCULA
R2538	ERJ3GEYJ222V	RESISTENCIA CHIP PELÖCULA
R2539	ERJ3GEYJ104V	RESISTENCIA CHIP PELÖCULA
R2555	ERJ3GEYJ102V	RESISTENCIA CHIP PELÖCULA
R2556	ERJ3GEYJ102V	RESISTENCIA CHIP PELÖCULA
R2557	ERJ3GEYJ102V	RESISTENCIA CHIP PELÖCULA
R2558	ERJ3GEYJ332V	RESISTENCIA CHIP PELÖCULA
R2559	ERJ3GEYJ183V	RESISTENCIA CHIP PELÖCULA
R2560	ERJ3GEYJ332V	RESISTENCIA CHIP PELÖCULA
R2561	ERJ3GEYJ223V	RESISTENCIA CHIP PELÖCULA
R2562	ERJ3GEYJ473V	RESISTENCIA CHIP PELÖCULA
R2563	ERJ3GEYJ473V	RESISTENCIA CHIP PELÖCULA
R2564	ERJ3GEYJ334V	RESISTENCIA CHIP
R2565	ERJ3GEYJ392V	RESISTENCIA CHIP PELÖCULA
R2566	ERJ3GEYJ222V	RESISTENCIA CHIP PELÖCULA
R2568	ERJ3GEYJ104V	RESISTENCIA CHIP PELÖCULA
R2571	ERJ3GEYJ222V	RESISTENCIA CHIP PELÖCULA
R2584	ERJ3GEYJ334V	RESISTENCIA CHIP
R2585	ERJ3GEYJ334V	RESISTENCIA CHIP
R2586	ERJ3GEYJ122V	RESISTENCIA CHIP PELÖCULA
R2587	ERJ3GEYJ122V	RESISTENCIA CHIP PELÖCULA
R2591	ERJ3GEYJ334V	RESISTENCIA CHIP
R2602	ERJ3GEYJ472V	RESISTENCIA CHIP PELÖCULA
R2603	ERJ3GEYJ271V	RESISTENCIA CHIP PELÖCULA
R2604	ERJ3GEYJ102V	RESISTENCIA CHIP PELÖCULA
R2605	ERJ3GEYJ471V	RESISTENCIA CHIP PELÖCULA
R2606	ERJ3GEYJ474V	RESISTENCIA CHIP PELÖCULA
R2607	ERJ3GEYJ331V	RESISTENCIA CHIP PELÖCULA
R2610	ERJ3GEYJ102V	RESISTENCIA CHIP PELÖCULA
R2611	ERJ3GEYJ391V	RESISTENCIA CHIP PELÖCULA
R2612	ERJ3GEYJ104V	RESISTENCIA CHIP PELÖCULA
R2613	ERJ3GEYJ103V	RESISTENCIA CHIP PELÖCULA
R2614	ERJ3GEYJ562V	RESISTENCIA CHIP PELÖCULA

R2615	ERJ3GEYJ561V	RESISTENCIA CHIP PELÖCULA
R2616	ERJ3GEYJ102V	RESISTENCIA CHIP PELÖCULA
R2617	ERJ3GEYJ473V	RESISTENCIA CHIP PELÖCULA
R2618	ERJ3GEYJ332V	RESISTENCIA CHIP PELÖCULA
R2619	ERJ3GEYJ332V	RESISTENCIA CHIP PELÖCULA
R2620	ERJ3GEYJ473V	RESISTENCIA CHIP PELÖCULA
R2621	ERJ3GEYJ223V	RESISTENCIA CHIP PELÖCULA
R2622	ERJ3GEYJ272V	RESISTENCIA CHIP PELÖCULA
R2623	ERJ3GEYJ683V	RESISTENCIA CHIP PELÖCULA
R2624	ERJ3GEYJ330V	RESISTENCIA CHIP
R2625	ERJ3GEYJ471V	RESISTENCIA CHIP PELÖCULA
R2626	ERJ3GEYJ102V	RESISTENCIA CHIP PELÖCULA
R2627	ERJ3GEYJ471V	RESISTENCIA CHIP PELÖCULA
R2628	ERJ3GEYJ820V	RESISTENCIA CHIP PELÖCULA
R2629	ERJ3GEYJ273V	RESISTENCIA CHIP PELÖCULA
R2630	ERJ3GEYJ103V	RESISTENCIA CHIP PELÖCULA
R2631	ERJ3GEYJ121V	RESISTENCIA CHIP
R2632	ERJ3GEYJ103V	RESISTENCIA CHIP PELÖCULA
R2633	ERJ3GEYJ102V	RESISTENCIA CHIP PELÖCULA
R2634	ERJ3GEYJ471V	RESISTENCIA CHIP PELÖCULA
R2635	ERJ3GEYJ102V	RESISTENCIA CHIP PELÖCULA
R2636	ERJ3GEYJ102V	RESISTENCIA CHIP PELÖCULA
R2637	ERJ3GEYJ102V	RESISTENCIA CHIP PELÖCULA
R2638	ERJ3GEYJ332V	RESISTENCIA CHIP PELÖCULA
R2641	ERJ3GEYJ682V	RESISTENCIA CHIP PELÖCULA
R2642	ERJ3GEYJ682V	RESISTENCIA CHIP PELÖCULA
R2643	ERJ3GEYJ223V	RESISTENCIA CHIP PELÖCULA
R2644	ERJ3GEYJ121V	RESISTENCIA CHIP
R2645	ERJ3GEYJ104V	RESISTENCIA CHIP PELÖCULA
R2646	ERJ3GEYJ104V	RESISTENCIA CHIP PELÖCULA
R2651	ERJ3GEYJ820V	RESISTENCIA CHIP PELÖCULA
R2701	ERJ3GEYJ225V	CHIP RESISTOR
R2702	ERJ3GEYJ332V	RESISTENCIA CHIP PELÖCULA
R2705	ERJ3GEYJ222V	RESISTENCIA CHIP PELÖCULA
R2706	ERJ3GEYJ222V	RESISTENCIA CHIP PELÖCULA
R2707	ERJ3GEYJ102V	RESISTENCIA CHIP PELÖCULA
R2708	ERJ3GEYJ103V	RESISTENCIA CHIP PELÖCULA
R2709	ERJ3GEYJ104V	RESISTENCIA CHIP PELÖCULA
R2710	ERJ3GEYJ224V	RESISTENCIA CHIP
R2711	ERJ3GEYJ101V	RESISTENCIA CHIP PELÖCULA
R2712	ERDS1FVJ220T	RESISTENCIA
R2713	ERJ3GEYJ104V	RESISTENCIA CHIP PELÖCULA
R2714	ERJ3GEYJ124V	RESISTENCIA CHIP PELÖCULA
R2715	ERJ3GEYJ103V	RESISTENCIA CHIP PELÖCULA

R2801	ERJ3GEYJ103V	RESISTENCIA CHIP PELÖCULA
R2802	ERJ3GEYJ101V	RESISTENCIA CHIP PELÖCULA
R2803	ERJ3GEYJ103V	RESISTENCIA CHIP PELÖCULA
R2804	ERJ3GEYJ473V	RESISTENCIA CHIP PELÖCULA
R2805	ERJ3GEYJ473V	RESISTENCIA CHIP PELÖCULA
R2806	ERJ3GEYJ103V	RESISTENCIA CHIP PELÖCULA
R2807	ERJ3GEYJ103V	RESISTENCIA CHIP PELÖCULA
R2810	ERJ3GEYJ223V	RESISTENCIA CHIP PELÖCULA
R2817	ERJ3GEYJ104V	RESISTENCIA CHIP PELÖCULA
R2818	ERJ3GEYJ104V	RESISTENCIA CHIP PELÖCULA
R2819	ERJ3GEYJ104V	RESISTENCIA CHIP PELÖCULA
R2820	ERJ3GEYJ104V	RESISTENCIA CHIP PELÖCULA
R2821	ERJ3GEYJ104V	RESISTENCIA CHIP PELÖCULA
R2822	ERJ3GEYJ104V	RESISTENCIA CHIP PELÖCULA
R2823	ERJ3GEYJ104V	RESISTENCIA CHIP PELÖCULA
R2824	ERJ3GEYJ104V	RESISTENCIA CHIP PELÖCULA
R2826	ERJ3GEYJ103V	RESISTENCIA CHIP PELÖCULA
R2834	ERJ3GEYJ102V	RESISTENCIA CHIP PELÖCULA
R2841	ERJ3GEYJ103V	RESISTENCIA CHIP PELÖCULA
R2842	ERJ3GEYJ103V	RESISTENCIA CHIP PELÖCULA
R2843	ERJ3GEYJ102V	RESISTENCIA CHIP PELÖCULA
R2844	ERJ3GEYJ103V	RESISTENCIA CHIP PELÖCULA
R2845	ERJ3GEYJ103V	RESISTENCIA CHIP PELÖCULA
R2846	ERJ3GEYJ472V	RESISTENCIA CHIP PELÖCULA
R2856	ERJ3GEYJ101V	RESISTENCIA CHIP PELÖCULA
R2857	ERJ3GEYJ101V	RESISTENCIA CHIP PELÖCULA
R2858	ERJ3GEYJ101V	RESISTENCIA CHIP PELÖCULA
R2859	ERJ3GEYJ101V	RESISTENCIA CHIP PELÖCULA
R2860	ERJ3GEYJ101V	RESISTENCIA CHIP PELÖCULA
R2861	ERJ3GEYJ101V	RESISTENCIA CHIP PELÖCULA
R2862	ERJ3GEYJ101V	RESISTENCIA CHIP PELÖCULA
R2867	ERJ3GEYJ104V	RESISTENCIA CHIP PELÖCULA
R2876	ERJ3GEYJ223V	RESISTENCIA CHIP PELÖCULA
R2877	ERJ3GEYJ223V	RESISTENCIA CHIP PELÖCULA
R2878	ERJ3GEYJ472V	RESISTENCIA CHIP PELÖCULA
R2881	ERJ3GEYJ221V	RESISTENCIA CHIP PELÖCULA
R2882	ERJ3GEYJ106V	CHIP RESISTOR
R2883	ERJ3GEYJ334V	RESISTENCIA CHIP
R2886	ERJ3GEYJ105V	RESISTENCIA CHIP
R2891	ERJ3GEYJ473V	RESISTENCIA CHIP PELÖCULA
R2899	ERJ3GEYJ473V	RESISTENCIA CHIP PELÖCULA
R2901	ERJ3GEYJ103V	RESISTENCIA CHIP PELÖCULA
R2902	ERDS1FVJ120T	RESISTENCIA
R2903	ERDS1FVJ150T	RESISTENCIA

R2907	ERJ3GEYJ102V	RESISTENCIA CHIP PELÖCULA
R2908	ERJ3GEYJ331V	RESISTENCIA CHIP PELÖCULA
R2909	ERJ3GEYJ222V	RESISTENCIA CHIP PELÖCULA
R2910	ERJ3GEYJ331V	RESISTENCIA CHIP PELÖCULA
R2912	ERJ3GEYJ472V	RESISTENCIA CHIP PELÖCULA
R2914	ERJ3GEYJ472V	RESISTENCIA CHIP PELÖCULA
R2916	ERJ3GEYJ472V	RESISTENCIA CHIP PELÖCULA
R2918	ERJ3GEYJ103V	RESISTENCIA CHIP PELÖCULA
R2919	ERJ3GEYJ472V	RESISTENCIA CHIP PELÖCULA
R2920	ERJ3GEYJ472V	RESISTENCIA CHIP PELÖCULA
R2921	ERJ3GEYJ472V	RESISTENCIA CHIP PELÖCULA
R2922	ERJ3GEYJ103V	RESISTENCIA CHIP PELÖCULA
R2924	ERJ3GEYJ103V	RESISTENCIA CHIP PELÖCULA
R2925	ERJ3GEYJ472V	RESISTENCIA CHIP PELÖCULA
R2927	ERJ3GEYJ472V	RESISTENCIA CHIP PELÖCULA
R2928	ERJ3GEYJ103V	RESISTENCIA CHIP PELÖCULA
R2929	ERJ3GEYJ103V	RESISTENCIA CHIP PELÖCULA
R2930	ERJ3GEYJ103V	RESISTENCIA CHIP PELÖCULA
R2931	ERJ3GEYJ103V	RESISTENCIA CHIP PELÖCULA
R2936	ERJ3GEYJ102V	RESISTENCIA CHIP PELÖCULA
R2937	ERJ3GEYJ103V	RESISTENCIA CHIP PELÖCULA
R2938	ERJ3GEYJ123V	RESISTENCIA CHIP PELÖCULA
R2939	ERJ3GEYJ223V	RESISTENCIA CHIP PELÖCULA
R2940	ERJ3GEYJ221V	RESISTENCIA CHIP PELÖCULA
R2941	ERJ3GEYJ123V	RESISTENCIA CHIP PELÖCULA
R2942	ERJ3GEYJ223V	RESISTENCIA CHIP PELÖCULA
R2943	ERJ3GEYJ103V	RESISTENCIA CHIP PELÖCULA
R2944	ERJ3GEYJ103V	RESISTENCIA CHIP PELÖCULA
R2945	ERJ3GEYJ473V	RESISTENCIA CHIP PELÖCULA
R2946	ERJ3GEYJ473V	RESISTENCIA CHIP PELÖCULA
R2952	ERJ3GEYJ472V	RESISTENCIA CHIP PELÖCULA
R2953	ERJ3GEYJ103V	RESISTENCIA CHIP PELÖCULA
R2954	ERDS1FVJ270T	RESISTENCIA
R3	ERDS2TJ221T	RESISTENCIA
R4	ERDS2TJ104T	RESISTENCIA
R5	ERDS2TJ564T	RESISTENCIA
R5036	ERJ3GEYJ334V	RESISTENCIA CHIP
R5077	ERJ3GEYJ563V	RESISTENCIA CHIP PELÖCULA
R5245	ERJ3GEYJ332V	RESISTENCIA CHIP PELÖCULA
R5246	ERJ3GEYJ153V	RESISTENCIA CHIP PELÖCULA
R5247	ERJ3GEYJ332V	RESISTENCIA CHIP PELÖCULA
R5248	ERJ3GEYJ153V	RESISTENCIA CHIP PELÖCULA
R5249	ERJ3GEYJ683V	RESISTENCIA CHIP PELÖCULA
R5250	ERJ3GEYJ683V	RESISTENCIA CHIP PELÖCULA

R5251	ERJ3GEYJ154V	RESISTENCIA CHIP PELÖCULA
R5252	ERJ3GEYJ104V	RESISTENCIA CHIP PELÖCULA
R5255	ERDS1FVJ100T	RESISTENCIA RADIAL
R5256	ERDS1FVJ100T	RESISTENCIA RADIAL
R5445	ERJ3GEYJ332V	RESISTENCIA CHIP PELÖCULA
R5446	ERJ3GEYJ153V	RESISTENCIA CHIP PELÖCULA
R5447	ERJ3GEYJ332V	RESISTENCIA CHIP PELÖCULA
R5448	ERJ3GEYJ153V	RESISTENCIA CHIP PELÖCULA
R5449	ERJ3GEYJ683V	RESISTENCIA CHIP PELÖCULA
R5450	ERJ3GEYJ683V	RESISTENCIA CHIP PELÖCULA
R5451	ERJ3GEYJ563V	RESISTENCIA CHIP PELÖCULA
R5452	ERJ3GEYJ224V	RESISTENCIA CHIP
R5455	ERDS1FVJ100T	RESISTENCIA RADIAL
R5456	ERDS1FVJ100T	RESISTENCIA RADIAL
R5457	ERDS1FVJ270T	RESISTENCIA
R5635	ERJ3GEYJ104V	RESISTENCIA CHIP PELÖCULA
R5669	ERJ3GEYJ272V	RESISTENCIA CHIP PELÖCULA
R5670	ERJ3GEYJ563V	RESISTENCIA CHIP PELÖCULA
R5671	ERJ3GEYJ334V	RESISTENCIA CHIP
R5673	ERDS1FVJ100T	RESISTENCIA RADIAL
R5734	ERJ3GEYJ562V	RESISTENCIA CHIP PELÖCULA
R5769	ERJ3GEYJ563V	RESISTENCIA CHIP PELÖCULA
R5770	ERJ3GEYJ104V	RESISTENCIA CHIP PELÖCULA
R5771	ERJ3GEYJ274V	RESIETNCIA CHIP
R5772	ERJ3GEYJ223V	RESISTENCIA CHIP PELÖCULA
R5773	ERDS1FVJ100T	RESISTENCIA RADIAL
R5777	ERJ3GEYJ563V	RESISTENCIA CHIP PELÖCULA
R5801	ERJ3GEYJ103V	RESISTENCIA CHIP PELÍCULA
R5802	ERJ3GEYJ223V	RESISTENCIA CHIP PELÖCULA
R5804	ERJ3GEYJ473V	RESISTENCIA CHIP PELÖCULA
R5805	ERJ3GEYJ473V	RESISTENCIA CHIP PELÖCULA
R5806	ERJ3GEYJ104V	RESISTENCIA CHIP PELÖCULA
R5807	ERDS1FVJ331T	RESISTENCIA RADIAL
R5808	ERDS1FVJ331T	RESISTENCIA RADIAL
R5809	ERDS1FVJ331T	RESISTENCIA RADIAL
R5810	ERJ3GEYJ272V	RESISTENCIA CHIP PELÖCULA
R5811	ERJ3GEYJ471V	RESISTENCIA CHIP PELÖCULA
R5812	ERJ3GEYJ272V	RESISTENCIA CHIP PELÖCULA
R5813	ERJ3GEYJ332V	RESISTENCIA CHIP PELÖCULA
R5814	ERJ3GEYJ332V	RESISTENCIA CHIP PELÖCULA
R5815	ERDS1FVJ270T	RESISTENCIA
R5816	ERDS1FVJ270T	RESISTENCIA
R5822	ERJ3GEYJ332V	RESISTENCIA CHIP PELÖCULA
R5823	ERJ3GEYJ471V	RESISTENCIA CHIP PELÖCULA

R5824	ERDS1FVJ2R2T	RESISTENCIA RADIAL
R5825	ERDS1FVJ2R2T	RESISTENCIA RADIAL
R5826	ERDS1FVJ2R2T	RESISTENCIA RADIAL
R5827	ERDS1FVJ2R2T	RESISTENCIA RADIAL
R5828	ERJ3GEYJ103V	RESISTENCIA CHIP PELÖCULA
R5829	ERDS1FVJ331T	RESISTENCIA RADIAL
R5830	ERJ3GEYJ122V	RESISTENCIA CHIP PELÖCULA
R5831	ERJ3GEYJ222V	RESISTENCIA CHIP PELÖCULA
R5834	ERDS1FVJ150T	RESISTENCIA
R5841	ERDS1FVJ331T	RESISTENCIA RADIAL
R5843	ERDS1FVJ6R8T	T/2 RESISTOR
R5844	ERDS1FVJ6R8T	T/2 RESISTOR
R5845	ERDS1FVJ6R8T	T/2 RESISTOR
R5846	ERDS1FVJ6R8T	T/2 RESISTOR
R5848	ERDS1FVJ6R8T	T/2 RESISTOR
R5853	ERJ3GEYJ224V	RESISTENCIA CHIP
R5854	ERJ3GEYJ103V	RESISTENCIA CHIP PELÖCULA
R5855	ERJ3GEYJ223V	RESISTENCIA CHIP PELÖCULA
R5856	ERJ3GEYJ103V	RESISTENCIA CHIP PELÖCULA
R5857	ERJ3GEYJ223V	RESISTENCIA CHIP PELÖCULA
R5882	ERDS1FVJ151T	1/2W RESISTOR
R5882	ERJ3GEYJ151V	RESISTENCIA CHIP PELÖCULA
R5897	ERDS1FVJ220T	RESISTENCIA
R5951	ERDS2TJ332T	RESISTENCIA CARBON
R5952	ERDS2TJ102T	R.CARBON
R5953	ERDS2TJ151T	RESISTENCIA
R5954	ERDS1FVJ100T	RESISTENCIA RADIAL
R5955	ERDS1FVJ100T	RESISTENCIA RADIAL
R5956	ERDS1FVJ100T	RESISTENCIA RADIAL
R5957	ERDS2TJ103T	RESISTENCIA
R5958	ERDS2TJ103T	RESISTENCIA
R5960	ERDS2TJ472T	RESISTENCIA CARBON
R5961	ERDS2TJ151T	RESISTENCIA
R5965	ERDS2TJ123T	RESISTENCIA
R5965	ERDS2TJ123T	RESISTENCIA
R6	ERDS2TJ391T	RESISTENCIA CARBON
R6102	ERDS2TJ102T	R.CARBON
R6103	ERDS2TJ102T	R.CARBON
R6104	ERDS2TJ122T	R.CARBON
R6105	ERDS2TJ182T	RESISTENCIA
R6106	ERDS2TJ222T	R.CARBON
R6107	ERDS2TJ272T	RESISTENCIA CARBON
R6108	ERDS2TJ472T	RESISTENCIA CARBON
R6109	ERDS2TJ682T	R.CARBON

R6109	ERDS2TJ682T	R.CARBON
R6110	ERDS2TJ103T	RESISTENCIA
R6111	ERDS2TJ223T	RESISTENCIA
R6199	ERDS2TJ103T	RESISTENCIA
R6202	ERDS2TJ102T	R.CARBON
R6203	ERDS2TJ102T	R.CARBON
R6204	ERDS2TJ122T	R.CARBON
R6205	ERDS2TJ182T	RESISTENCIA
R6206	ERDS2TJ222T	R.CARBON
R6207	ERDS2TJ272T	RESISTENCIA CARBON
R6208	ERDS2TJ472T	RESISTENCIA CARBON
R6209	ERDS2TJ682T	R.CARBON
R6210	ERDS2TJ103T	RESISTENCIA
R6302	ERDS2TJ102T	R.CARBON
R6303	ERDS2TJ102T	R.CARBON
R6304	ERDS2TJ122T	R.CARBON
R6305	ERDS2TJ182T	RESISTENCIA
R6306	ERDS2TJ222T	R.CARBON
R6307	ERDS2TJ272T	RESISTENCIA CARBON
R6308	ERDS2TJ472T	RESISTENCIA CARBON
R6309	ERDS2TJ682T	R.CARBON
R6310	ERDS2TJ103T	RESISTENCIA
R6399	ERDS2TJ103T	RESISTENCIA
R6401	ERDS2TJ103T	RESISTENCIA
R6402	ERDS2TJ103T	RESISTENCIA
R6403	ERDS2TJ2R7T	RESISTENCIA
R6404	ERDS2TJ2R7T	RESISTENCIA
R6405	ERDS2TJ274T	R.CARBON
R6406	ERDS2TJ274T	R.CARBON
R6411	ERDS2TJ223T	RESISTENCIA
R6412	ERDS2TJ102T	R.CARBON
R6415	ERDS2TJ223T	RESISTENCIA
R6416	ERDS2TJ102T	R.CARBON
R6421	ERDS2TJ103T	RESISTENCIA
R6425	ERDS2TJ103T	RESISTENCIA
R6451	ERDS2TJ392T	RESISTENCIA CARBON
R6452	ERDS2TJ392T	RESISTENCIA CARBON
R6453	ERDS2TJ392T	RESISTENCIA CARBON
R6454	ERDS2TJ392T	RESISTENCIA CARBON
R6455	ERDS2TJ392T	RESISTENCIA CARBON
R6456	ERDS2TJ392T	RESISTENCIA CARBON
R6457	ERDS2TJ392T	RESISTENCIA CARBON
R6458	ERDS2TJ472T	RESISTENCIA CARBON
R6491	ERDS2TJ473T	RESISTENCIA CARBON
R6492	ERDS2TJ473T	RESISTENCIA CARBON

R6493	ERDS2TJ103T	RESISTENCIA
R6509	ERDS2TJ101T	R.CARBON
R6601	ERDS2TJ471T	R.CARBON
R6602	ERDS2TJ471T	R.CARBON
R6603	ERDS2TJ221T	RESISTENCIA
R6604	ERDS2TJ221T	RESISTENCIA
R6611	ERDS2TJ153T	RESISTENCIA
R6631	ERD2FCVG470T	RESISTENCIA
R6632	ERD2FCVG470T	RESISTENCIA
R7	ERDS2TJ272T	RESISTENCIA CARBON
R8	ERDS2TJ684T	RESISTENCIA CARBON
R9	ERDS2TJ391T	RESISTENCIA CARBON
R952	ERDS2TJ821T	RESISTENCIA CARBON
R953	ERDS2TJ393T	RESISTENCIA CARBON
R972	ERDS2TJ821T	RESISTENCIA CARBON
R973	ERDS2TJ393T	RESISTENCIA CARBON
Z971	RGSD12A1445T	RESISTENCIA RADA

VARIABLE RESISTORS

S6101	EVQ21405R	TACT SWITCH
S6102	EVQ21405R	TACT SWITCH
S6103	EVQ21405R	TACT SWITCH
S6104	EVQ21405R	TACT SWITCH
S6105	EVQ21405R	TACT SWITCH
S6106	EVQ21405R	TACT SWITCH
S6107	EVQ21405R	TACT SWITCH
S6108	EVQ21405R	TACT SWITCH
S6109	EVQ21405R	TACT SWITCH
S6110	EVQ21405R	TACT SWITCH
S6201	EVQ21405R	TACT SWITCH
S6202	EVQ21405R	TACT SWITCH
S6203	EVQ21405R	TACT SWITCH
S6204	EVQ21405R	TACT SWITCH
S6205	EVQ21405R	TACT SWITCH
S6206	EVQ21405R	TACT SWITCH
S6207	EVQ21405R	TACT SWITCH
S6208	EVQ21405R	TACT SWITCH
S6209	EVQ21405R	TACT SWITCH
S6210	EVQ21405R	TACT SWITCH
S6301	EVQ21405R	TACT SWITCH
S6303	EVQ21405R	TACT SWITCH
S6304	EVQ21405R	TACT SWITCH
S6305	EVQ21405R	TACT SWITCH

S6306	EVQ21405R	TACT SWITCH
S6307	EVQ21405R	TACT SWITCH
S6308	EVQ21405R	TACT SWITCH
S6309	EVQ21405R	TACT SWITCH
S6310	EVQ21405R	TACT SWITCH
VR6491	EVEKE2F2524B	VOLUMEN JOG

CHIP RESISTOR

C1047	W6NL-0	ALAMBRE DESNUDO ESTAYADO
C1048	W6NL-0	ALAMBRE DESNUDO ESTA¥ADO
C1051	W6NL-0	ALAMBRE DESNUDO ESTA¥ADO
C1052	W6NL-0	ALAMBRE DESNUDO ESTA¥ADO
C1054	W6NL-0	ALAMBRE DESNUDO ESTA¥ADO
C1064	W6NL-0	ALAMBRE DESNUDO ESTA¥ADO
D6482	W6NL-0	ALAMBRE DESNUDO ESTA¥ADO
FJ1	W6NL-0	ALAMBRE DESNUDO ESTA¥ADO
FJ2	W6NL-0	ALAMBRE DESNUDO ESTA¥ADO
FJ3	W6NL-0	ALAMBRE DESNUDO ESTA¥ADO
FJ4	W6NL-0	ALAMBRE DESNUDO ESTA¥ADO
FJ5	W6NL-0	ALAMBRE DESNUDO ESTA¥ADO
FJ6	W6NL-0	ALAMBRE DESNUDO ESTA¥ADO
FJ7	W6NL-0	ALAMBRE DESNUDO ESTA¥ADO
FJ8	W6NL-0	ALAMBRE DESNUDO ESTA¥ADO
J1	W6NL-0	ALAMBRE DESNUDO ESTA¥ADO
J1002	W6NL-0	ALAMBRE DESNUDO ESTA¥ADO
J1003	W6NL-0	ALAMBRE DESNUDO ESTA¥ADO
J1004	W6NL-0	ALAMBRE DESNUDO ESTA¥ADO
J1006	W6NL-0	ALAMBRE DESNUDO ESTA¥ADO
J1008	W6NL-0	ALAMBRE DESNUDO ESTA¥ADO
J1009	W6NL-0	ALAMBRE DESNUDO ESTA¥ADO
J1010	W6NL-0	ALAMBRE DESNUDO ESTA¥ADO
J1011	W6NL-0	ALAMBRE DESNUDO ESTA¥ADO
J1012	W6NL-0	ALAMBRE DESNUDO ESTA¥ADO
J1013	W6NL-0	ALAMBRE DESNUDO ESTA¥ADO
J1014	W6NL-0	ALAMBRE DESNUDO ESTA¥ADO
J1015	W6NL-0	ALAMBRE DESNUDO ESTA¥ADO
J1016	W6NL-0	ALAMBRE DESNUDO ESTA¥ADO
J1020	W6NL-0	ALAMBRE DESNUDO ESTA¥ADO
J1021	W6NL-0	ALAMBRE DESNUDO ESTA¥ADO
J1022	W6NL-0	ALAMBRE DESNUDO ESTA¥ADO
J1023	W6NL-0	ALAMBRE DESNUDO ESTA¥ADO
J1028	W6NL-0	ALAMBRE DESNUDO ESTA¥ADO
J1033	W6NL-0	ALAMBRE DESNUDO ESTA¥ADO

J1038	W6NL-0	ALAMBRE DESNUDO ESTA¥ADO
J1111	W6NL-0	ALAMBRE DESNUDO ESTA¥ADO
J13	W6NL-0	ALAMBRE DESNUDO ESTA¥ADO
J130	W6NL-0	ALAMBRE DESNUDO ESTA¥ADO
J14	W6NL-0	ALAMBRE DESNUDO ESTA¥ADO
J140	W6NL-0	ALAMBRE DESNUDO ESTA¥ADO
J15	W6NL-0	ALAMBRE DESNUDO ESTA¥ADO
J150	W6NL-0	ALAMBRE DESNUDO ESTA¥ADO
J16	W6NL-0	ALAMBRE DESNUDO ESTA¥ADO
J160	W6NL-0	ALAMBRE DESNUDO ESTA¥ADO
J2	W6NL-0	ALAMBRE DESNUDO ESTA¥ADO
J3	W6NL-0	ALAMBRE DESNUDO ESTA¥ADO
J3	W6NL-0	ALAMBRE DESNUDO ESTA¥ADO
J4	W6NL-0	ALAMBRE DESNUDO ESTA¥ADO
J6	W6NL-0	ALAMBRE DESNUDO ESTA¥ADO
J60	W6NL-0	ALAMBRE DESNUDO ESTA¥ADO
J90	W6NL-0	ALAMBRE DESNUDO ESTA¥ADO
J9999	W6NL-0	ALAMBRE DESNUDO ESTA¥ADO
L2580	W6NL-0	ALAMBRE DESNUDO ESTA¥ADO
L2801	W6NL-0	ALAMBRE DESNUDO ESTA¥ADO
L2901	W6NL-0	ALAMBRE DESNUDO ESTA¥ADO
L6401	W6NL-0	ALAMBRE DESNUDO ESTA¥ADO
L6551	W6NL-0	ALAMBRE DESNUDO ESTA¥ADO
L6552	W6NL-0	ALAMBRE DESNUDO ESTA¥ADO
L6553	W6NL-0	ALAMBRE DESNUDO ESTA¥ADO
L6621	W6NL-0	ALAMBRE DESNUDO ESTA¥ADO
L6631	W6NL-0	ALAMBRE DESNUDO ESTA¥ADO
R5253	W6NL-0	ALAMBRE DESNUDO ESTA¥ADO
R5254	W6NL-0	ALAMBRE DESNUDO ESTA¥ADO
R5453	W6NL-0	ALAMBRE DESNUDO ESTA¥ADO
R5454	W6NL-0	ALAMBRE DESNUDO ESTA¥ADO
R5678	W6NL-0	ALAMBRE DESNUDO ESTA¥ADO
R5778	W6NL-0	ALAMBRE DESNUDO ESTA¥ADO
R5835	W6NL-0	ALAMBRE DESNUDO ESTA¥ADO
R5959	W6NL-0	ALAMBRE DESNUDO ESTA¥ADO
R6417	W6NL-0	ALAMBRE DESNUDO ESTA¥ADO
R6418	W6NL-0	ALAMBRE DESNUDO ESTA¥ADO
R6419	W6NL-0	ALAMBRE DESNUDO ESTA¥ADO
R6431	W6NL-0	ALAMBRE DESNUDO ESTA¥ADO
R6481	W6NL-0	ALAMBRE DESNUDO ESTA¥ADO
R6642	W6NL-0	ALAMBRE DESNUDO ESTA¥ADO
R6643	W6NL-0	ALAMBRE DESNUDO ESTA¥ADO
R6901	W6NL-0	ALAMBRE DESNUDO ESTA¥ADO
R6902	W6NL-0	ALAMBRE DESNUDO ESTA¥ADO

R6903	W6NL-0	ALAMBRE DESNUDO ESTA¥ADO
R6926	W6NL-0	ALAMBRE DESNUDO ESTA¥ADO
R6927	W6NL-0	ALAMBRE DESNUDO ESTA¥ADO
W2101	W6NL-0	ALAMBRE DESNUDO ESTA¥ADO
W2102	W6NL-0	ALAMBRE DESNUDO ESTA¥ADO
W2103	W6NL-0	ALAMBRE DESNUDO ESTA¥ADO
W2104	W6NL-0	ALAMBRE DESNUDO ESTA¥ADO
W2107	W6NL-0	ALAMBRE DESNUDO ESTA¥ADO
W2108	W6NL-0	ALAMBRE DESNUDO ESTA¥ADO
W2109	W6NL-0	ALAMBRE DESNUDO ESTA¥ADO
W2111	W6NL-0	ALAMBRE DESNUDO ESTA¥ADO
W2112	W6NL-0	ALAMBRE DESNUDO ESTA¥ADO
W2113	W6NL-0	ALAMBRE DESNUDO ESTA¥ADO
W2114	W6NL-0	ALAMBRE DESNUDO ESTA¥ADO
W2115	W6NL-0	ALAMBRE DESNUDO ESTA¥ADO
W2116	W6NL-0	ALAMBRE DESNUDO ESTA¥ADO
W2117	W6NL-0	ALAMBRE DESNUDO ESTA¥ADO
W2118	W6NL-0	ALAMBRE DESNUDO ESTA¥ADO
W2119	W6NL-0	ALAMBRE DESNUDO ESTA¥ADO
W2121	W6NL-0	ALAMBRE DESNUDO ESTA¥ADO
W2126	W6NL-0	ALAMBRE DESNUDO ESTA¥ADO
W2127	W6NL-0	ALAMBRE DESNUDO ESTA¥ADO
W2128	W6NL-0	ALAMBRE DESNUDO ESTA¥ADO
W2129	W6NL-0	ALAMBRE DESNUDO ESTA¥ADO
W2130	W6NL-0	ALAMBRE DESNUDO ESTA¥ADO
W2131	W6NL-0	ALAMBRE DESNUDO ESTA¥ADO
W2132	W6NL-0	ALAMBRE DESNUDO ESTA¥ADO
W2133	W6NL-0	ALAMBRE DESNUDO ESTA¥ADO
W2134	W6NL-0	ALAMBRE DESNUDO ESTA¥ADO
W2136	W6NL-0	ALAMBRE DESNUDO ESTA¥ADO
W2137	W6NL-0	ALAMBRE DESNUDO ESTA¥ADO
W2138	W6NL-0	ALAMBRE DESNUDO ESTA¥ADO
W2139	W6NL-0	ALAMBRE DESNUDO ESTA¥ADO
W2141	W6NL-0	ALAMBRE DESNUDO ESTA¥ADO
W2147	W6NL-0	ALAMBRE DESNUDO ESTA¥ADO
W2148	W6NL-0	ALAMBRE DESNUDO ESTA¥ADO
W2149	W6NL-0	ALAMBRE DESNUDO ESTA¥ADO
W2150	W6NL-0	ALAMBRE DESNUDO ESTA¥ADO
W2151	W6NL-0	ALAMBRE DESNUDO ESTA¥ADO
W2152	W6NL-0	ALAMBRE DESNUDO ESTA¥ADO
W2155	W6NL-0	ALAMBRE DESNUDO ESTA¥ADO
W2156	W6NL-0	ALAMBRE DESNUDO ESTA¥ADO
W2157	W6NL-0	ALAMBRE DESNUDO ESTA¥ADO
W2158	W6NL-0	ALAMBRE DESNUDO ESTA¥ADO

W2160	W6NL-0	ALAMBRE DESNUDO ESTA¥ADO
W2161	W6NL-0	ALAMBRE DESNUDO ESTA¥ADO
W2162	W6NL-0	ALAMBRE DESNUDO ESTA¥ADO
W2163	W6NL-0	ALAMBRE DESNUDO ESTA¥ADO
W2164	W6NL-0	ALAMBRE DESNUDO ESTA¥ADO
W2165	W6NL-0	ALAMBRE DESNUDO ESTA¥ADO
W2166	W6NL-0	ALAMBRE DESNUDO ESTA¥ADO
W2167	W6NL-0	ALAMBRE DESNUDO ESTA¥ADO
W2168	W6NL-0	ALAMBRE DESNUDO ESTA¥ADO
W2169	W6NL-0	ALAMBRE DESNUDO ESTA¥ADO
W2207	W6NL-0	ALAMBRE DESNUDO ESTA¥ADO
W2208	W6NL-0	ALAMBRE DESNUDO ESTA¥ADO
W2209	W6NL-0	ALAMBRE DESNUDO ESTA¥ADO
W2211	W6NL-0	ALAMBRE DESNUDO ESTA¥ADO
W2223	W6NL-0	ALAMBRE DESNUDO ESTA¥ADO
W2225	W6NL-0	ALAMBRE DESNUDO ESTA¥ADO
W2226	W6NL-0	ALAMBRE DESNUDO ESTA¥ADO
W2227	W6NL-0	ALAMBRE DESNUDO ESTA¥ADO
W2228	W6NL-0	ALAMBRE DESNUDO ESTA¥ADO
W2236	W6NL-0	ALAMBRE DESNUDO ESTA¥ADO
W2237	W6NL-0	ALAMBRE DESNUDO ESTA¥ADO
W2238	W6NL-0	ALAMBRE DESNUDO ESTA¥ADO
W2239	W6NL-0	ALAMBRE DESNUDO ESTA¥ADO
W2240	W6NL-0	ALAMBRE DESNUDO ESTA¥ADO
W2241	W6NL-0	ALAMBRE DESNUDO ESTA¥ADO
W2242	W6NL-0	ALAMBRE DESNUDO ESTA¥ADO
W2243	W6NL-0	ALAMBRE DESNUDO ESTA¥ADO
W2245	W6NL-0	ALAMBRE DESNUDO ESTA¥ADO
W2247	W6NL-0	ALAMBRE DESNUDO ESTA¥ADO
W2248	W6NL-0	ALAMBRE DESNUDO ESTA¥ADO
W2249	W6NL-0	ALAMBRE DESNUDO ESTA¥ADO
W2250	W6NL-0	ALAMBRE DESNUDO ESTA¥ADO
W2251	W6NL-0	ALAMBRE DESNUDO ESTA¥ADO
W2252	W6NL-0	ALAMBRE DESNUDO ESTA¥ADO
W2253	W6NL-0	ALAMBRE DESNUDO ESTA¥ADO
W2254	W6NL-0	ALAMBRE DESNUDO ESTA¥ADO
W2255	W6NL-0	ALAMBRE DESNUDO ESTA¥ADO
W2256	W6NL-0	ALAMBRE DESNUDO ESTA¥ADO
W2257	W6NL-0	ALAMBRE DESNUDO ESTA¥ADO
W2258	W6NL-0	ALAMBRE DESNUDO ESTA¥ADO
W2259	W6NL-0	ALAMBRE DESNUDO ESTA¥ADO
W2260	W6NL-0	ALAMBRE DESNUDO ESTA¥ADO
W2261	W6NL-0	ALAMBRE DESNUDO ESTA¥ADO
W2262	W6NL-0	ALAMBRE DESNUDO ESTA¥ADO

W2263	W6NL-0	ALAMBRE DESNUDO ESTA¥ADO
W2265	W6NL-0	ALAMBRE DESNUDO ESTA¥ADO
W2266	W6NL-0	ALAMBRE DESNUDO ESTA¥ADO
W2267	W6NL-0	ALAMBRE DESNUDO ESTA¥ADO
W2268	W6NL-0	ALAMBRE DESNUDO ESTA¥ADO
W2269	W6NL-0	ALAMBRE DESNUDO ESTA¥ADO
W2270	W6NL-0	ALAMBRE DESNUDO ESTA¥ADO
W2271	W6NL-0	ALAMBRE DESNUDO ESTA¥ADO
W2272	W6NL-0	ALAMBRE DESNUDO ESTA¥ADO
W2273	W6NL-0	ALAMBRE DESNUDO ESTA¥ADO
W2274	W6NL-0	ALAMBRE DESNUDO ESTA¥ADO
W2275	W6NL-0	ALAMBRE DESNUDO ESTA¥ADO
W2276	W6NL-0	ALAMBRE DESNUDO ESTA¥ADO
W2277	W6NL-0	ALAMBRE DESNUDO ESTA¥ADO
W2279	W6NL-0	ALAMBRE DESNUDO ESTA¥ADO
W2280	W6NL-0	ALAMBRE DESNUDO ESTA¥ADO
W2281	W6NL-0	ALAMBRE DESNUDO ESTA¥ADO
W2282	W6NL-0	ALAMBRE DESNUDO ESTA¥ADO
W2283	W6NL-0	ALAMBRE DESNUDO ESTA¥ADO
W2284	W6NL-0	ALAMBRE DESNUDO ESTA¥ADO
W2286	W6NL-0	ALAMBRE DESNUDO ESTA¥ADO
W2287	W6NL-0	ALAMBRE DESNUDO ESTA¥ADO
W2289	W6NL-0	ALAMBRE DESNUDO ESTA¥ADO
W2290	W6NL-0	ALAMBRE DESNUDO ESTA¥ADO
W2291	W6NL-0	ALAMBRE DESNUDO ESTA¥ADO
W2292	W6NL-0	ALAMBRE DESNUDO ESTA¥ADO
W2293	W6NL-0	ALAMBRE DESNUDO ESTA¥ADO
W2297	W6NL-0	ALAMBRE DESNUDO ESTA¥ADO
W2298	W6NL-0	ALAMBRE DESNUDO ESTA¥ADO
W2299	W6NL-0	ALAMBRE DESNUDO ESTA¥ADO
W2300	W6NL-0	ALAMBRE DESNUDO ESTA¥ADO
W2301	W6NL-0	ALAMBRE DESNUDO ESTA¥ADO
W2302	W6NL-0	ALAMBRE DESNUDO ESTA¥ADO
W2310	W6NL-0	ALAMBRE DESNUDO ESTA¥ADO
W2311	W6NL-0	ALAMBRE DESNUDO ESTA¥ADO
W2312	W6NL-0	ALAMBRE DESNUDO ESTA¥ADO
W2313	W6NL-0	ALAMBRE DESNUDO ESTA¥ADO
W2314	W6NL-0	ALAMBRE DESNUDO ESTA¥ADO
W2315	W6NL-0	ALAMBRE DESNUDO ESTA¥ADO
W2316	W6NL-0	ALAMBRE DESNUDO ESTA¥ADO
W2317	W6NL-0	ALAMBRE DESNUDO ESTA¥ADO
W2318	W6NL-0	ALAMBRE DESNUDO ESTA¥ADO
W2319	W6NL-0	ALAMBRE DESNUDO ESTA¥ADO
W2320	W6NL-0	ALAMBRE DESNUDO ESTA¥ADO

W2321	W6NL-0	ALAMBRE DESNUDO ESTA¥ADO
W2322	W6NL-0	ALAMBRE DESNUDO ESTA¥ADO
W2323	W6NL-0	ALAMBRE DESNUDO ESTA¥ADO
W2324	W6NL-0	ALAMBRE DESNUDO ESTA¥ADO
W2325	W6NL-0	ALAMBRE DESNUDO ESTA¥ADO
W2326	W6NL-0	ALAMBRE DESNUDO ESTA¥ADO
W2329	W6NL-0	ALAMBRE DESNUDO ESTA¥ADO
W2330	W6NL-0	ALAMBRE DESNUDO ESTA¥ADO
W2331	W6NL-0	ALAMBRE DESNUDO ESTA¥ADO
W2332	W6NL-0	ALAMBRE DESNUDO ESTA¥ADO
W2333	W6NL-0	ALAMBRE DESNUDO ESTA¥ADO
W2334	W6NL-0	ALAMBRE DESNUDO ESTA¥ADO
W2335	W6NL-0	ALAMBRE DESNUDO ESTA¥ADO
W2336	W6NL-0	ALAMBRE DESNUDO ESTA¥ADO
W2337	W6NL-0	ALAMBRE DESNUDO ESTA¥ADO
W2338	W6NL-0	ALAMBRE DESNUDO ESTA¥ADO
W2339	W6NL-0	ALAMBRE DESNUDO ESTA¥ADO
W2340	W6NL-0	ALAMBRE DESNUDO ESTA¥ADO
W2341	W6NL-0	ALAMBRE DESNUDO ESTA¥ADO
W2342	W6NL-0	ALAMBRE DESNUDO ESTA¥ADO
W2343	W6NL-0	ALAMBRE DESNUDO ESTA¥ADO
W2344	W6NL-0	ALAMBRE DESNUDO ESTA¥ADO
W2346	W6NL-0	ALAMBRE DESNUDO ESTA¥ADO
W2348	W6NL-0	ALAMBRE DESNUDO ESTA¥ADO
W2351	W6NL-0	ALAMBRE DESNUDO ESTA¥ADO
W2353	W6NL-0	ALAMBRE DESNUDO ESTA¥ADO
W2354	W6NL-0	ALAMBRE DESNUDO ESTA¥ADO
W2355	W6NL-0	ALAMBRE DESNUDO ESTA¥ADO
W2356	W6NL-0	ALAMBRE DESNUDO ESTA¥ADO
W2357	W6NL-0	ALAMBRE DESNUDO ESTA¥ADO
W2360	W6NL-0	ALAMBRE DESNUDO ESTA¥ADO
W2361	W6NL-0	ALAMBRE DESNUDO ESTA¥ADO
W2362	W6NL-0	ALAMBRE DESNUDO ESTA¥ADO
W2363	W6NL-0	ALAMBRE DESNUDO ESTA¥ADO
W2364	W6NL-0	ALAMBRE DESNUDO ESTA¥ADO
W2365	W6NL-0	ALAMBRE DESNUDO ESTA¥ADO
W2366	W6NL-0	ALAMBRE DESNUDO ESTA¥ADO
W2369	W6NL-0	ALAMBRE DESNUDO ESTA¥ADO
W2373	W6NL-0	ALAMBRE DESNUDO ESTA¥ADO
W2374	W6NL-0	ALAMBRE DESNUDO ESTA¥ADO
W2375	W6NL-0	ALAMBRE DESNUDO ESTA¥ADO
W2376	W6NL-0	ALAMBRE DESNUDO ESTA¥ADO
W2377	W6NL-0	ALAMBRE DESNUDO ESTA¥ADO
W2378	W6NL-0	ALAMBRE DESNUDO ESTA¥ADO

W2380	W6NL-0	ALAMBRE DESNUDO ESTA¥ADO
W2381	W6NL-0	ALAMBRE DESNUDO ESTA¥ADO
W2382	W6NL-0	ALAMBRE DESNUDO ESTA¥ADO
W2384	W6NL-0	ALAMBRE DESNUDO ESTA¥ADO
W2385	W6NL-0	ALAMBRE DESNUDO ESTA¥ADO
W2386	W6NL-0	ALAMBRE DESNUDO ESTA¥ADO
W2387	W6NL-0	ALAMBRE DESNUDO ESTA¥ADO
W2388	W6NL-0	ALAMBRE DESNUDO ESTA¥ADO
W2389	W6NL-0	ALAMBRE DESNUDO ESTA¥ADO
W2390	W6NL-0	ALAMBRE DESNUDO ESTA¥ADO
W2401	W6NL-0	ALAMBRE DESNUDO ESTA¥ADO
W2403	W6NL-0	ALAMBRE DESNUDO ESTA¥ADO
W2410	W6NL-0	ALAMBRE DESNUDO ESTA¥ADO
W2411	W6NL-0	ALAMBRE DESNUDO ESTA¥ADO
W2412	W6NL-0	ALAMBRE DESNUDO ESTA¥ADO
W2413	W6NL-0	ALAMBRE DESNUDO ESTA¥ADO
W2414	W6NL-0	ALAMBRE DESNUDO ESTA¥ADO
W2415	W6NL-0	ALAMBRE DESNUDO ESTA¥ADO
W2416	W6NL-0	ALAMBRE DESNUDO ESTA¥ADO
W2417	W6NL-0	ALAMBRE DESNUDO ESTA¥ADO
W2418	W6NL-0	ALAMBRE DESNUDO ESTA¥ADO
W2419	W6NL-0	ALAMBRE DESNUDO ESTA¥ADO
W2419	W6NL-0	ALAMBRE DESNUDO ESTA¥ADO
W2420	W6NL-0	ALAMBRE DESNUDO ESTA¥ADO
W2422	W6NL-0	ALAMBRE DESNUDO ESTA¥ADO
W2423	W6NL-0	ALAMBRE DESNUDO ESTA¥ADO
W2424	W6NL-0	ALAMBRE DESNUDO ESTA¥ADO
W2425	W6NL-0	ALAMBRE DESNUDO ESTA¥ADO
W2426	W6NL-0	ALAMBRE DESNUDO ESTA¥ADO
W2427	W6NL-0	ALAMBRE DESNUDO ESTA¥ADO
W2428	W6NL-0	ALAMBRE DESNUDO ESTA¥ADO
W2429	W6NL-0	ALAMBRE DESNUDO ESTA¥ADO
W2430	W6NL-0	ALAMBRE DESNUDO ESTA¥ADO
W2431	W6NL-0	ALAMBRE DESNUDO ESTA¥ADO
W2432	W6NL-0	ALAMBRE DESNUDO ESTA¥ADO
W2433	W6NL-0	ALAMBRE DESNUDO ESTA¥ADO
W2434	W6NL-0	ALAMBRE DESNUDO ESTA¥ADO
W2435	W6NL-0	ALAMBRE DESNUDO ESTA¥ADO
W2436	W6NL-0	ALAMBRE DESNUDO ESTA¥ADO
W2437	W6NL-0	ALAMBRE DESNUDO ESTA¥ADO
W2438	W6NL-0	ALAMBRE DESNUDO ESTA¥ADO
W2439	W6NL-0	ALAMBRE DESNUDO ESTA¥ADO
W2440	W6NL-0	ALAMBRE DESNUDO ESTA¥ADO
W2441	W6NL-0	ALAMBRE DESNUDO ESTA¥ADO

W2442	W6NL-0	ALAMBRE DESNUDO ESTA¥ADO
W2443	W6NL-0	ALAMBRE DESNUDO ESTA¥ADO
W2446	W6NL-0	ALAMBRE DESNUDO ESTA¥ADO
W2447	W6NL-0	ALAMBRE DESNUDO ESTA¥ADO
W2448	W6NL-0	ALAMBRE DESNUDO ESTA¥ADO
W2450	W6NL-0	ALAMBRE DESNUDO ESTA¥ADO
W2451	W6NL-0	ALAMBRE DESNUDO ESTA¥ADO
W2452	W6NL-0	ALAMBRE DESNUDO ESTA¥ADO
W2453	W6NL-0	ALAMBRE DESNUDO ESTA¥ADO
W2454	W6NL-0	ALAMBRE DESNUDO ESTA¥ADO
W2455	W6NL-0	ALAMBRE DESNUDO ESTA¥ADO
W2456	W6NL-0	ALAMBRE DESNUDO ESTA¥ADO
W2457	W6NL-0	ALAMBRE DESNUDO ESTA¥ADO
W2458	W6NL-0	ALAMBRE DESNUDO ESTA¥ADO
W2459	W6NL-0	ALAMBRE DESNUDO ESTA¥ADO
W2461	W6NL-0	ALAMBRE DESNUDO ESTA¥ADO
W2465	W6NL-0	ALAMBRE DESNUDO ESTA¥ADO
W2501	W6NL-0	ALAMBRE DESNUDO ESTA¥ADO
W2502	W6NL-0	ALAMBRE DESNUDO ESTA¥ADO
W2503	W6NL-0	ALAMBRE DESNUDO ESTA¥ADO
W2504	W6NL-0	ALAMBRE DESNUDO ESTA¥ADO
W2505	W6NL-0	ALAMBRE DESNUDO ESTA¥ADO
W2506	W6NL-0	ALAMBRE DESNUDO ESTA¥ADO
W2507	W6NL-0	ALAMBRE DESNUDO ESTA¥ADO
W2508	W6NL-0	ALAMBRE DESNUDO ESTA¥ADO
W2509	W6NL-0	ALAMBRE DESNUDO ESTA¥ADO
W2511	W6NL-0	ALAMBRE DESNUDO ESTA¥ADO
W2512	W6NL-0	ALAMBRE DESNUDO ESTA¥ADO
W5049	W6NL-0	ALAMBRE DESNUDO ESTA¥ADO
W5801	W6NL-0	ALAMBRE DESNUDO ESTA¥ADO
W5802	W6NL-0	ALAMBRE DESNUDO ESTA¥ADO
W5803	W6NL-0	ALAMBRE DESNUDO ESTA¥ADO
W5804	W6NL-0	ALAMBRE DESNUDO ESTA¥ADO
W5805	W6NL-0	ALAMBRE DESNUDO ESTA¥ADO
W5806	W6NL-0	ALAMBRE DESNUDO ESTA¥ADO
W5807	W6NL-0	ALAMBRE DESNUDO ESTA¥ADO
W5808	W6NL-0	ALAMBRE DESNUDO ESTA¥ADO
W5809	W6NL-0	ALAMBRE DESNUDO ESTA¥ADO
W5810	W6NL-0	ALAMBRE DESNUDO ESTA¥ADO
W5811	W6NL-0	ALAMBRE DESNUDO ESTA¥ADO
W5812	W6NL-0	ALAMBRE DESNUDO ESTA¥ADO
W5813	W6NL-0	ALAMBRE DESNUDO ESTA¥ADO
W5814	W6NL-0	ALAMBRE DESNUDO ESTA¥ADO
W5815	W6NL-0	ALAMBRE DESNUDO ESTA¥ADO

W5816	W6NL-0	ALAMBRE DESNUDO ESTA¥ADO
W5817	W6NL-0	ALAMBRE DESNUDO ESTA¥ADO
W5818	W6NL-0	ALAMBRE DESNUDO ESTA¥ADO
W5819	W6NL-0	ALAMBRE DESNUDO ESTA¥ADO
W5820	W6NL-0	ALAMBRE DESNUDO ESTA¥ADO
W5821	W6NL-0	ALAMBRE DESNUDO ESTA¥ADO
W5822	W6NL-0	ALAMBRE DESNUDO ESTA¥ADO
W5823	W6NL-0	ALAMBRE DESNUDO ESTA¥ADO
W5824	W6NL-0	ALAMBRE DESNUDO ESTA¥ADO
W5825	W6NL-0	ALAMBRE DESNUDO ESTA¥ADO
W5826	W6NL-0	ALAMBRE DESNUDO ESTA¥ADO
W5827	W6NL-0	ALAMBRE DESNUDO ESTA¥ADO
W5828	W6NL-0	ALAMBRE DESNUDO ESTA¥ADO
W5828	W6NL-0	ALAMBRE DESNUDO ESTA¥ADO
W5829	W6NL-0	ALAMBRE DESNUDO ESTA¥ADO
W5830	W6NL-0	ALAMBRE DESNUDO ESTA¥ADO
W5831	W6NL-0	ALAMBRE DESNUDO ESTA¥ADO
W5832	W6NL-0	ALAMBRE DESNUDO ESTA¥ADO
W5833	W6NL-0	ALAMBRE DESNUDO ESTA¥ADO
W5834	W6NL-0	ALAMBRE DESNUDO ESTA¥ADO
W5835	W6NL-0	ALAMBRE DESNUDO ESTA¥ADO
W5836	W6NL-0	ALAMBRE DESNUDO ESTA¥ADO
W5837	W6NL-0	ALAMBRE DESNUDO ESTA¥ADO
W5838	W6NL-0	ALAMBRE DESNUDO ESTA¥ADO
W5839	W6NL-0	ALAMBRE DESNUDO ESTA¥ADO
W5840	W6NL-0	ALAMBRE DESNUDO ESTA¥ADO
W5841	W6NL-0	ALAMBRE DESNUDO ESTA¥ADO
W5842	W6NL-0	ALAMBRE DESNUDO ESTA¥ADO
W5843	W6NL-0	ALAMBRE DESNUDO ESTA¥ADO
W5844	W6NL-0	ALAMBRE DESNUDO ESTA¥ADO
W5845	W6NL-0	ALAMBRE DESNUDO ESTA¥ADO
W5846	W6NL-0	ALAMBRE DESNUDO ESTA¥ADO
W5847	W6NL-0	ALAMBRE DESNUDO ESTA¥ADO
W5848	W6NL-0	ALAMBRE DESNUDO ESTA¥ADO
W5849	W6NL-0	ALAMBRE DESNUDO ESTA¥ADO
W5850	W6NL-0	ALAMBRE DESNUDO ESTA¥ADO
W5851	W6NL-0	ALAMBRE DESNUDO ESTA¥ADO
W5852	W6NL-0	ALAMBRE DESNUDO ESTA¥ADO
W5853	W6NL-0	ALAMBRE DESNUDO ESTA¥ADO
W5854	W6NL-0	ALAMBRE DESNUDO ESTA¥ADO
W5855	W6NL-0	ALAMBRE DESNUDO ESTA¥ADO
W5856	W6NL-0	ALAMBRE DESNUDO ESTA¥ADO
W5857	W6NL-0	ALAMBRE DESNUDO ESTA¥ADO
W5858	W6NL-0	ALAMBRE DESNUDO ESTA¥ADO

W5872	W6NL-0	ALAMBRE DESNUDO ESTA¥ADO
W5873	W6NL-0	ALAMBRE DESNUDO ESTA¥ADO
W5902	W6NL-0	ALAMBRE DESNUDO ESTA¥ADO
W5909	W6NL-0	ALAMBRE DESNUDO ESTA¥ADO
W5909	W6NL-0	ALAMBRE DESNUDO ESTA¥ADO
W5910	W6NL-0	ALAMBRE DESNUDO ESTA¥ADO
W5910	W6NL-0	ALAMBRE DESNUDO ESTA¥ADO
W5913	W6NL-0	ALAMBRE DESNUDO ESTA¥ADO
W5913	W6NL-0	ALAMBRE DESNUDO ESTA¥ADO
W5916	W6NL-0	ALAMBRE DESNUDO ESTA¥ADO
W5916	W6NL-0	ALAMBRE DESNUDO ESTA¥ADO
W5917	W6NL-0	ALAMBRE DESNUDO ESTA¥ADO
W5917	W6NL-0	ALAMBRE DESNUDO ESTA¥ADO
W5920	W6NL-0	ALAMBRE DESNUDO ESTA¥ADO
W5920	W6NL-0	ALAMBRE DESNUDO ESTA¥ADO
W5933	W6NL-0	ALAMBRE DESNUDO ESTA¥ADO
W5933	W6NL-0	ALAMBRE DESNUDO ESTA¥ADO
W5938	W6NL-0	ALAMBRE DESNUDO ESTA¥ADO
W5938	W6NL-0	ALAMBRE DESNUDO ESTA¥ADO
W5940	W6NL-0	ALAMBRE DESNUDO ESTA¥ADO
W5940	W6NL-0	ALAMBRE DESNUDO ESTA¥ADO
W5941	W6NL-0	ALAMBRE DESNUDO ESTA¥ADO
W5941	W6NL-0	ALAMBRE DESNUDO ESTA¥ADO
W5951	W6NL-0	ALAMBRE DESNUDO ESTA¥ADO
W5951	W6NL-0	ALAMBRE DESNUDO ESTA¥ADO
W5955	W6NL-0	ALAMBRE DESNUDO ESTA¥ADO
W5955	W6NL-0	ALAMBRE DESNUDO ESTA¥ADO
W5959	W6NL-0	ALAMBRE DESNUDO ESTA¥ADO
W5962	W6NL-0	ALAMBRE DESNUDO ESTA¥ADO
W5963	W6NL-0	ALAMBRE DESNUDO ESTA¥ADO
W5987	W6NL-0	ALAMBRE DESNUDO ESTA¥ADO
W5987	W6NL-0	ALAMBRE DESNUDO ESTA¥ADO
W5988	W6NL-0	ALAMBRE DESNUDO ESTA¥ADO
W5988	W6NL-0	ALAMBRE DESNUDO ESTA¥ADO
W5989	W6NL-0	ALAMBRE DESNUDO ESTA¥ADO
W5989	W6NL-0	ALAMBRE DESNUDO ESTA¥ADO
W5990	W6NL-0	ALAMBRE DESNUDO ESTA¥ADO
W5990	W6NL-0	ALAMBRE DESNUDO ESTA¥ADO
W6001	W6NL-0	ALAMBRE DESNUDO ESTA¥ADO
W6003	W6NL-0	ALAMBRE DESNUDO ESTA¥ADO
W6004	W6NL-0	ALAMBRE DESNUDO ESTA¥ADO
W6005	W6NL-0	ALAMBRE DESNUDO ESTA¥ADO
W6005	W6NL-0	ALAMBRE DESNUDO ESTA¥ADO
W6006	W6NL-0	ALAMBRE DESNUDO ESTA¥ADO

W6006	W6NL-0	ALAMBRE DESNUDO ESTA¥ADO
W6007	W6NL-0	ALAMBRE DESNUDO ESTA¥ADO
W6007	W6NL-0	ALAMBRE DESNUDO ESTA¥ADO
W6008	W6NL-0	ALAMBRE DESNUDO ESTA¥ADO
W6009	W6NL-0	ALAMBRE DESNUDO ESTA¥ADO
W6010	W6NL-0	ALAMBRE DESNUDO ESTA¥ADO
W6011	W6NL-0	ALAMBRE DESNUDO ESTA¥ADO
W6012	W6NL-0	ALAMBRE DESNUDO ESTA¥ADO
W6013	W6NL-0	ALAMBRE DESNUDO ESTA¥ADO
W6015	W6NL-0	ALAMBRE DESNUDO ESTA¥ADO
W6016	W6NL-0	ALAMBRE DESNUDO ESTA¥ADO
W6017	W6NL-0	ALAMBRE DESNUDO ESTA¥ADO
W6018	W6NL-0	ALAMBRE DESNUDO ESTA¥ADO
W6019	W6NL-0	ALAMBRE DESNUDO ESTA¥ADO
W6020	W6NL-0	ALAMBRE DESNUDO ESTA¥ADO
W6021	W6NL-0	ALAMBRE DESNUDO ESTA¥ADO
W6021	W6NL-0	ALAMBRE DESNUDO ESTA¥ADO
W6022	W6NL-0	ALAMBRE DESNUDO ESTA¥ADO
W6022	W6NL-0	ALAMBRE DESNUDO ESTA¥ADO
W6023	W6NL-0	ALAMBRE DESNUDO ESTA¥ADO
W6023	W6NL-0	ALAMBRE DESNUDO ESTA¥ADO
W6024	W6NL-0	ALAMBRE DESNUDO ESTA¥ADO
W6024	W6NL-0	ALAMBRE DESNUDO ESTA¥ADO
W6025	W6NL-0	ALAMBRE DESNUDO ESTA¥ADO
W6025	W6NL-0	ALAMBRE DESNUDO ESTA¥ADO
W6026	W6NL-0	ALAMBRE DESNUDO ESTA¥ADO
W6026	W6NL-0	ALAMBRE DESNUDO ESTA¥ADO
W6027	W6NL-0	ALAMBRE DESNUDO ESTA¥ADO
W6028	W6NL-0	ALAMBRE DESNUDO ESTA¥ADO
W6029	W6NL-0	ALAMBRE DESNUDO ESTA¥ADO
W6030	W6NL-0	ALAMBRE DESNUDO ESTA¥ADO
W6031	W6NL-0	ALAMBRE DESNUDO ESTA¥ADO
W6032	W6NL-0	ALAMBRE DESNUDO ESTA¥ADO
W6033	W6NL-0	ALAMBRE DESNUDO ESTA¥ADO
W6034	W6NL-0	ALAMBRE DESNUDO ESTA¥ADO
W6035	W6NL-0	ALAMBRE DESNUDO ESTA¥ADO
W6036	W6NL-0	ALAMBRE DESNUDO ESTA¥ADO
W6037	W6NL-0	ALAMBRE DESNUDO ESTA¥ADO
W6038	W6NL-0	ALAMBRE DESNUDO ESTA¥ADO
W6039	W6NL-0	ALAMBRE DESNUDO ESTA¥ADO
W6040	W6NL-0	ALAMBRE DESNUDO ESTA¥ADO
W6041	W6NL-0	ALAMBRE DESNUDO ESTA¥ADO
W6042	W6NL-0	ALAMBRE DESNUDO ESTA¥ADO
W6043	W6NL-0	ALAMBRE DESNUDO ESTA¥ADO

W6044	W6NL-0	ALAMBRE DESNUDO ESTA¥ADO
W6045	W6NL-0	ALAMBRE DESNUDO ESTA¥ADO
W6046	W6NL-0	ALAMBRE DESNUDO ESTA¥ADO
W6050	W6NL-0	ALAMBRE DESNUDO ESTA¥ADO
W6059	W6NL-0	ALAMBRE DESNUDO ESTA¥ADO
W6060	W6NL-0	ALAMBRE DESNUDO ESTA¥ADO
W6061	W6NL-0	ALAMBRE DESNUDO ESTA¥ADO
W6063	W6NL-0	ALAMBRE DESNUDO ESTA¥ADO
W6064	W6NL-0	ALAMBRE DESNUDO ESTA¥ADO
W6065	W6NL-0	ALAMBRE DESNUDO ESTA¥ADO
W6066	W6NL-0	ALAMBRE DESNUDO ESTA¥ADO
W6067	W6NL-0	ALAMBRE DESNUDO ESTA¥ADO
W6068	W6NL-0	ALAMBRE DESNUDO ESTA¥ADO
W6069	W6NL-0	ALAMBRE DESNUDO ESTA¥ADO
W6070	W6NL-0	ALAMBRE DESNUDO ESTA¥ADO
W6071	W6NL-0	ALAMBRE DESNUDO ESTA¥ADO
W6072	W6NL-0	ALAMBRE DESNUDO ESTA¥ADO
W6073	W6NL-0	ALAMBRE DESNUDO ESTA¥ADO
W6074	W6NL-0	ALAMBRE DESNUDO ESTA¥ADO
W6075	W6NL-0	ALAMBRE DESNUDO ESTA¥ADO
W6076	W6NL-0	ALAMBRE DESNUDO ESTA¥ADO
W6077	W6NL-0	ALAMBRE DESNUDO ESTA¥ADO
W6078	W6NL-0	ALAMBRE DESNUDO ESTA¥ADO
W6079	W6NL-0	ALAMBRE DESNUDO ESTA¥ADO
W6080	W6NL-0	ALAMBRE DESNUDO ESTA¥ADO
W6081	W6NL-0	ALAMBRE DESNUDO ESTA¥ADO
W6082	W6NL-0	ALAMBRE DESNUDO ESTA¥ADO
W6083	W6NL-0	ALAMBRE DESNUDO ESTA¥ADO
W6085	W6NL-0	ALAMBRE DESNUDO ESTA¥ADO
W6086	W6NL-0	ALAMBRE DESNUDO ESTA¥ADO
W6088	W6NL-0	ALAMBRE DESNUDO ESTA¥ADO
W6089	W6NL-0	ALAMBRE DESNUDO ESTA¥ADO
W6090	W6NL-0	ALAMBRE DESNUDO ESTA¥ADO
W6091	W6NL-0	ALAMBRE DESNUDO ESTA¥ADO
W6092	W6NL-0	ALAMBRE DESNUDO ESTA¥ADO
W6093	W6NL-0	ALAMBRE DESNUDO ESTA¥ADO
W6094	W6NL-0	ALAMBRE DESNUDO ESTA¥ADO
W6095	W6NL-0	ALAMBRE DESNUDO ESTA¥ADO
W6098	W6NL-0	ALAMBRE DESNUDO ESTA¥ADO
W6099	W6NL-0	ALAMBRE DESNUDO ESTA¥ADO
W6100	W6NL-0	ALAMBRE DESNUDO ESTA¥ADO
W6101	W6NL-0	ALAMBRE DESNUDO ESTA¥ADO
W6102	W6NL-0	ALAMBRE DESNUDO ESTA¥ADO
W6103	W6NL-0	ALAMBRE DESNUDO ESTA¥ADO

W6104	W6NL-0	ALAMBRE DESNUDO ESTA¥ADO
W6105	W6NL-0	ALAMBRE DESNUDO ESTA¥ADO
W6106	W6NL-0	ALAMBRE DESNUDO ESTA¥ADO
W6107	W6NL-0	ALAMBRE DESNUDO ESTA¥ADO
W6494	W6NL-0	ALAMBRE DESNUDO ESTA¥ADO
W6930	W6NL-0	ALAMBRE DESNUDO ESTA¥ADO

CERAMIC CONDENSER

C2101	ECJ1VB1C105K	CERAMIC CONDENSER
C2120	ECJ1VB1C105K	CERAMIC CONDENSER
C2141	ECJ1VB1C105K	CERAMIC CONDENSER
C2142	ECJ1VB1C105K	CERAMIC CONDENSER
C2183	ECJ1VB1C105K	CERAMIC CONDENSER
C2201	ECJ1VB1C105K	CERAMIC CONDENSER
C2220	ECJ1VB1C105K	CERAMIC CONDENSER
C2241	ECJ1VB1C105K	CERAMIC CONDENSER
C2242	ECJ1VB1C105K	CERAMIC CONDENSER
C2283	ECJ1VB1C105K	CERAMIC CONDENSER
C2331	ECJ1VB1C105K	CERAMIC CONDENSER
C2522	ECJ1VB1C105K	CERAMIC CONDENSER
C2523	ECJ1VB1C105K	CERAMIC CONDENSER
C2525	ECJ1VB1C105K	CERAMIC CONDENSER
C2527	ECJ1VB1C105K	CERAMIC CONDENSER
C2554	ECJ1VB1C105K	CERAMIC CONDENSER
C2560	ECJ1VB1C105K	CERAMIC CONDENSER
C2561	ECJ1VB1C105K	CERAMIC CONDENSER
C2626	ECJ2VF1C105Z	CONDENSADOR
C2856	ECJ1VB1C105K	CERAMIC CONDENSER
C5252	ECJ1VB1C105K	CERAMIC CONDENSER
C5451	ECJ1VB1C105K	CERAMIC CONDENSER

CHIP JUMPER

C2191	ERJ3GEY0R00V	CHIP JUMPER
C2192	ERJ3GEY0R00V	CHIP JUMPER
C2291	ERJ3GEY0R00V	CHIP JUMPER
C2292	ERJ3GEY0R00V	CHIP JUMPER
C2332	ERJ3GEY0R00V	CHIP JUMPER
L2996	ERJ3GEY0R00V	CHIP JUMPER
R1002	ERJ3GEY0R00V	CHIP JUMPER
R1020	ERJ3GEY0R00V	CHIP JUMPER
R1024	ERJ3GEY0R00V	CHIP JUMPER
R1025	ERJ3GEY0R00V	CHIP JUMPER

R1027	ERJ3GEY0R00V	CHIP JUMPER
R1040	ERJ3GEY0R00V	CHIP JUMPER
R1049	ERJ3GEY0R00V	CHIP JUMPER
R1050	ERJ3GEY0R00V	CHIP JUMPER
R1091	ERJ3GEY0R00V	CHIP JUMPER
R1092	ERJ3GEY0R00V	CHIP JUMPER
R1099	ERJ3GEY0R00V	CHIP JUMPER
R1100	ERJ3GEY0R00V	CHIP JUMPER
R1101	ERJ3GEY0R00V	CHIP JUMPER
R2004	ERJ3GEY0R00V	CHIP JUMPER
R2005	ERJ3GEY0R00V	CHIP JUMPER
R2026	ERJ3GEY0R00V	CHIP JUMPER
R2027	ERJ3GEY0R00V	CHIP JUMPER
R2152	ERJ3GEY0R00V	CHIP JUMPER
R2192	ERJ3GEY0R00V	CHIP JUMPER
R2252	ERJ3GEY0R00V	CHIP JUMPER
R2292	ERJ3GEY0R00V	CHIP JUMPER
R2320	ERJ3GEY0R00V	CHIP JUMPER
R2331	ERJ3GEY0R00V	CHIP JUMPER
R2333	ERJ3GEY0R00V	CHIP JUMPER
R2411	ERJ3GEY0R00V	CHIP JUMPER
R2420	ERJ3GEY0R00V	CHIP JUMPER
R2512	ERJ3GEY0R00V	CHIP JUMPER
R2531	ERJ3GEY0R00V	CHIP JUMPER
R2532	ERJ3GEY0R00V	CHIP JUMPER
R2582	ERJ3GEY0R00V	CHIP JUMPER
R2592	ERJ3GEY0R00V	CHIP JUMPER
R2601	ERJ3GEY0R00V	CHIP JUMPER
R2652	ERJ3GEY0R00V	CHIP JUMPER
R2704	ERJ3GEY0R00V	CHIP JUMPER
R2763	ERJ3GEY0R00V	CHIP JUMPER
R2764	ERJ3GEY0R00V	CHIP JUMPER
R2811	ERJ3GEY0R00V	CHIP JUMPER
R2892	ERJ3GEY0R00V	CHIP JUMPER
R2911	ERJ3GEY0R00V	CHIP JUMPER
R2913	ERJ3GEY0R00V	CHIP JUMPER
R2915	ERJ3GEY0R00V	CHIP JUMPER
R2917	ERJ3GEY0R00V	CHIP JUMPER
R2923	ERJ3GEY0R00V	CHIP JUMPER
R2926	ERJ3GEY0R00V	CHIP JUMPER
R2932	ERJ3GEY0R00V	CHIP JUMPER
R2933	ERJ3GEY0R00V	CHIP JUMPER
R2976	ERJ3GEY0R00V	CHIP JUMPER
R2977	ERJ3GEY0R00V	CHIP JUMPER
R5803	ERJ3GEY0R00V	CHIP JUMPER
R5862	ERJ3GEY0R00V	CHIP JUMPER
W2929	ERJ3GEY0R00V	CHIP JUMPER

LEDS

D6451	B3AAA0000583	LED
D6452	B3AAA0000583	LED
D6453	B3AAA0000583	LED
D6454	B3AAA0000583	LED
D6455	B3AAA0000583	LED
D6456	B3AAA0000583	LED
D6457	B3AAA0000583	LED
D6458	B3AAA0000583	LED

WIRES

W6555	REXX0324	9P (2MM) FLAT WIRE
W5950	REXX0325	9P (2.5MM) FLAT WIRE
W5004	REXX0457	9P (2.5mm) FLAT WIRE

OSCILLATORS

X2602	H3F1065A0002	DISCRIMINATOR
X2603	H0H720400007	CRYSTAL OSCILLATOR
X2801	H0A327200115	37.768 KHz XTAL
X2802	H2B100500004	CERAMIC RESONATORS
Z2602	G2BAD0000003	BOBINA AM
Z5950	ERZV10V511CS	ZNR
Z6481	B3RAB0000040	IR REMOTE CONTROL SENSOR

	435-120305-00	PIEZO CAP
	436-T29001-00	DOUBLE SIDE TAPE
	DN83K	DIABOND
	RMRM0015-1	BASE PIEZZO
	REEX0393	CABLE PIEZO
	REEX0402	16 PIN FFC (PANEL TO MAIN)
	RSJ0003	BOBINA
W1002	RWJ0102050CK	MULTICABLE
	RDB0069	"BUJE ""F"" SIN ACEITE"
	RDB0070	"BUJE ""R"" SIN ACEITE"
	RD-DAC024-PX	MECANISMO CD
	RD-DAU064APX	LECTOR OPTICO
	RDG0300	ENGRANE BASE CARRETE
	RDG0301	ENGRANE DE TRANSMISION
	RDG0302	"ENGRANE RELEVADOR ""FF"""
	RDG0303	ENGRANE ENBOBINADOR
	RDK0026-4	ENGRANE PRINCIPAL

23.5 Packing Materials& Accessories Parts List

Ref. No.	Part No.	Part Name & Description PACKING MATERIALS	Remarks
P1	RPGM0191	PACKING CASE	[M]P
P2	RPNM0150B/T	POLYFOAM (MAIN SET)	[M]
P3	RPFM0009-A	MIRAMAT BAG	[M]
		ACCESSORIES	
A1	N2QAHB000054	REMOTE CONTROL	[M]
A1-1	UM-3PA/T	R/C BATTERY COVER	[M]
A2	SJA168-1A	AC CORD	(M)
A3	RQTM0132	O/I BOOK (Sp)	[M]P
A4	RSA0006-L	FM ANTENNA	[M]
A5	N1DAAAA00001	AM LOOP ANTENNA	[M]

23.6 Packaging

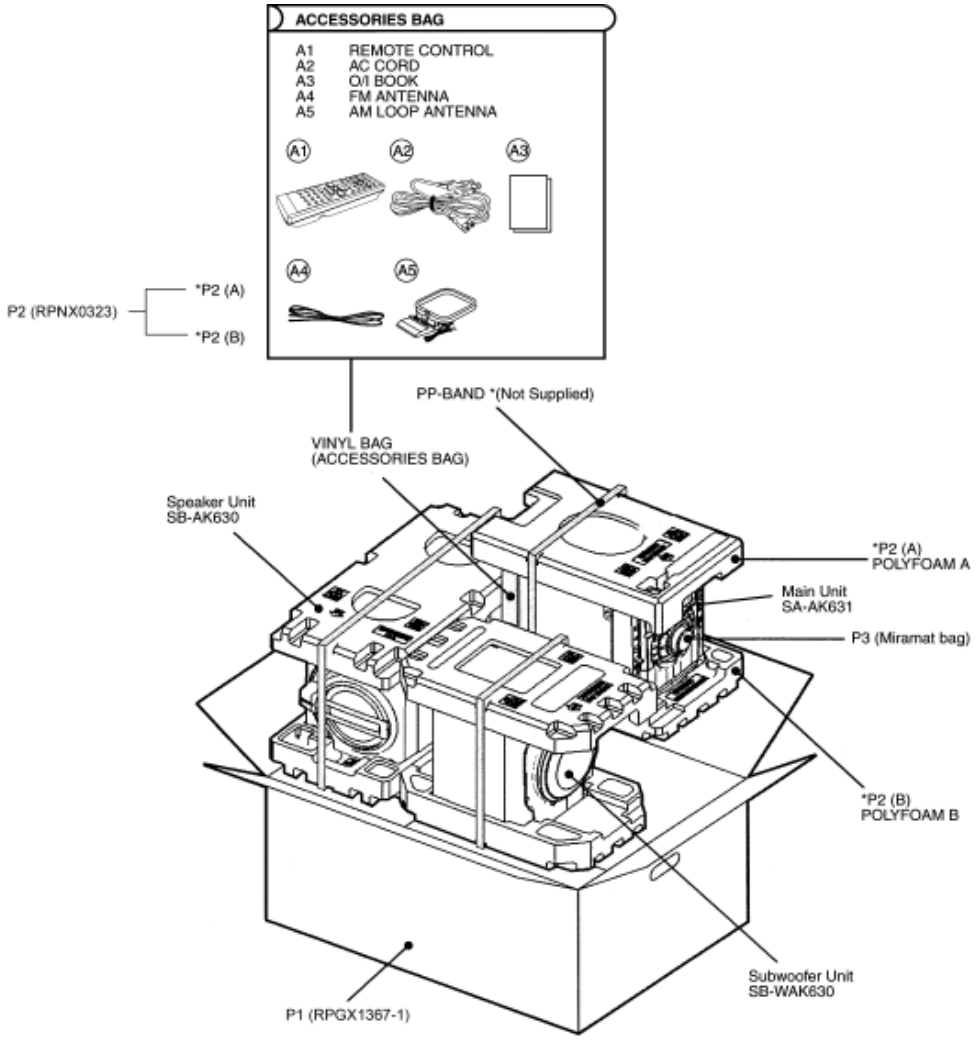

1 Connection of the Speaker Cables

- Be sure to connect speaker cables before connecting the AC power supply cord.

- The load impedance of any speaker used with this unit must be 5˜.

- Be sure to connect the cable from the right speaker to the right terminal and the cable from the left speaker to the left terminal.

Strip off the outer covering, and twist the center conductor. Make sure the bare ends of the wires are not unravelled. (If they are, twist them tight again.)

Insert the wire to the rear panel of the unit and close the lever.

Notes :
- To prevent damage to circuitry, never short-circuit positive (+) and negative (-) speaker wires.

- Be sure to connect only positive (red) wires to positive (+) terminals and negative (black) wires to negative (-) terminals.

Placement
Place the front speakers so that the super tweeter is on the inside.

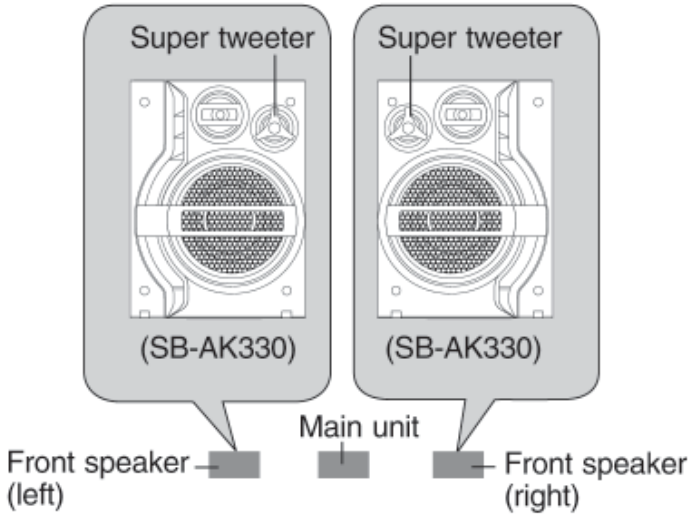

Notes :
- Keep your speakers at least 10 mm (13/32”) away from the system for proper ventilation.

- These speakers do not have magnetic shielding. Do not place them near televisions, personal computers or other devices easily influenced by magnetism.

- You cannot take the front net off the speakers.

Connection

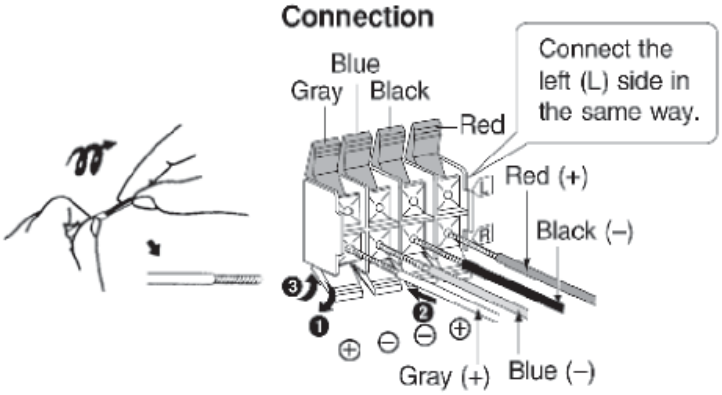

Use only the supplied speakers.
The combination of the main unit and speakers provide the best sound.

Using other speakers can damage the unit and sound quality will be negatively affected.

Notes on speaker use
- You can damage your speakers and shorten their useful life if you play sound at high levels over extended periods.

- Reduce the volume in the following cases to avoid damage.

- When playing distorted sound.

- When adjusting the sound quality.

Caution
- **Use the speakers only with the recommended system. Failure to do so may lead to damage to the amplifier and/or the speakers, and may result in the risk of fire. Consult a qualified service person if damage has occurred or if you experience a sudden change in performance.**
- **Do not attach these speakers to walls or ceilings.**

2 Connection of the Speaker Wiring

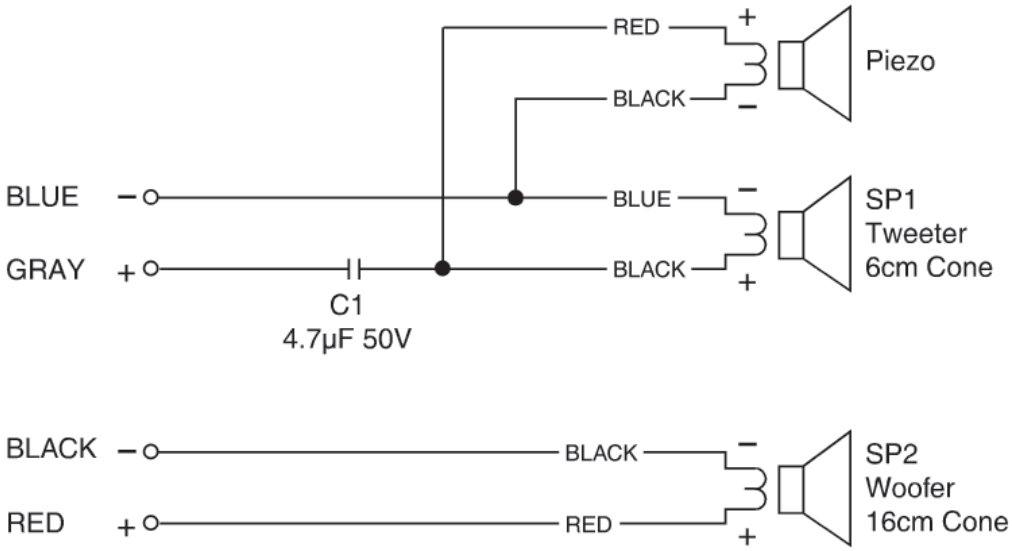

3 Cabinet Parts Location

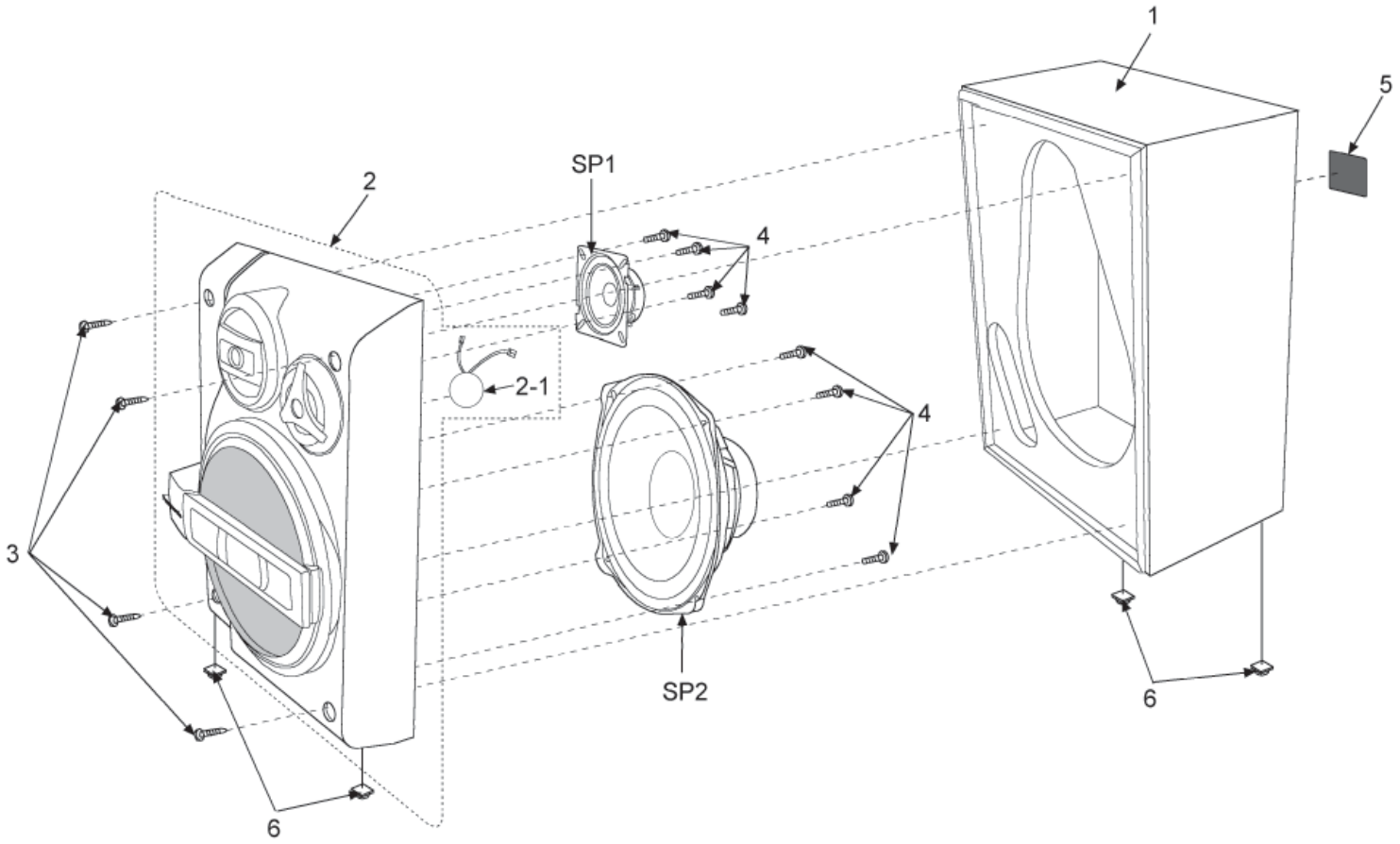

4 Replacement Parts List

Notes :

- Important safety notice :

When replacing any of these components, be sure to use only manufacturer's specified parts shown in the parts list.

- [M] markings in the Remarks columns indicates parts supplied by **PAVCSG .**

Ref. No.	Part No.	Part Name & Description	Remarks
		CABINET AND CHASSIS	
1	RKPM0092	SPK CABINET ASS'Y(L)	[M]S
1	RKPM0093	SPK CABINET ASS'Y(R)	[M]S
2	RYPM0186	FRONT PANEL ASS'Y(L)	[M]S
2	RYPM0187	FRONT PANEL ASS'Y(R)	[M]S
02-Ene	RASM001	PIEZZO ASS'Y	[M]
3	XTB4+16AFZ-A	SCREW (FRONT PANEL)	[M]
4	XTB4+10G-A	TAPPING SCREW	[M]
6	RKA0072-KJ	LEG CUSHION	[M]
		PACKING MATERIALS	
P1	RPNM0152B/T	POLYFOAM	[M]
P2	RPFM0028	MIRAMAT	[M]
		SPEAKERS	
SP1	EAST6PH08N6	TWEETER	[M]S
SP2	L0AA16A00014	WOOFER	[M]S

5 Packaging

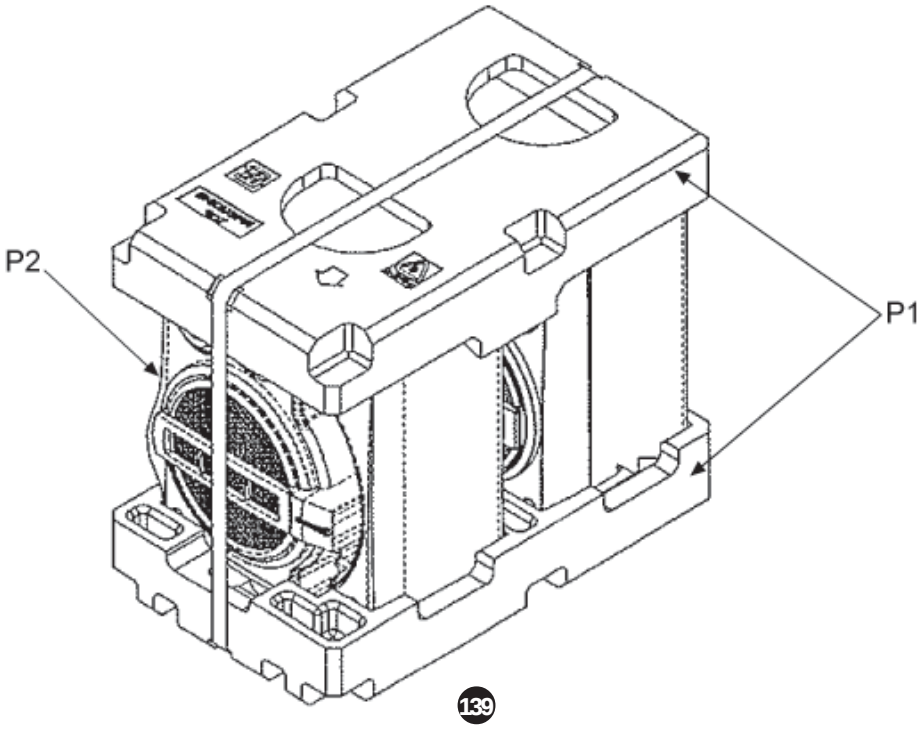

1 Connection of the Speaker Cables

- Be sure to connect speaker cables before connecting the AC power supply cord.

- The load impedance of any speaker used with this unit must be 8Ω.

- Be sure to connect the cable from the right speaker to the right terminal and the cable from the left speaker to the left terminal.

Strip off the outer covering, and twist the center conductor. Make sure the bare ends of the wires are not unravelled. (If they are, twist them tight again.)

Insert the wire to the rear panel of the unit and close the lever.

Notes :
- To prevent damage to circuitry, never short-circuit positive (+) and negative (-) speaker wires.

- Be sure to connect only positive (red) wires to positive (+) terminals and negative (black) wires to negative (-) terminals.

Placement
Place the front speakers so that the super tweeter is on the inside.

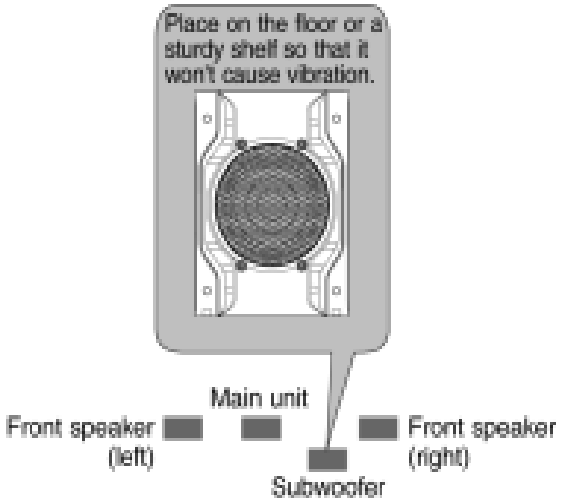

Notes :
- Keep your speakers at least 10 mm (13/32") away from the system for proper ventilation.

- These speakers do not have magnetic shielding. Do not place them near televisions, personal computers or other devices easily influenced by magnetism.

- You cannot take the front net off the speakers.

Connection

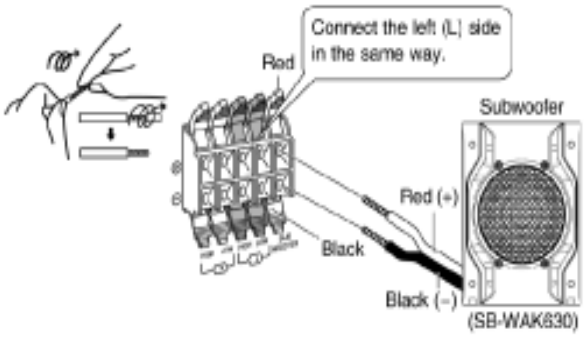

Use only the supplied speakers.
The combination of the main unit and speakers provide the best sound.

Using other speakers can damage the unit and sound quality will be negatively affected.

Notes on speaker use
- You can damage your speakers and shorten their useful life if you play sound at high levels over extended periods.

- Reduce the volume in the following cases to avoid damage.

- When playing distorted sound.

- When adjusting the sound quality.

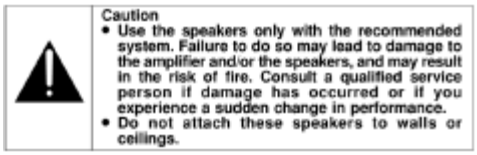

Caution
- Use the speakers only with the recommended system. Failure to do so may lead to damage to the amplifier and/or the speakers, and may result in the risk of fire. Consult a qualified service person if damage has occurred or if you experience a sudden change in performance.
- Do not attach these speakers to walls or ceilings.

2 Connection of the Speaker Wiring

3 Cabinet Parts Location

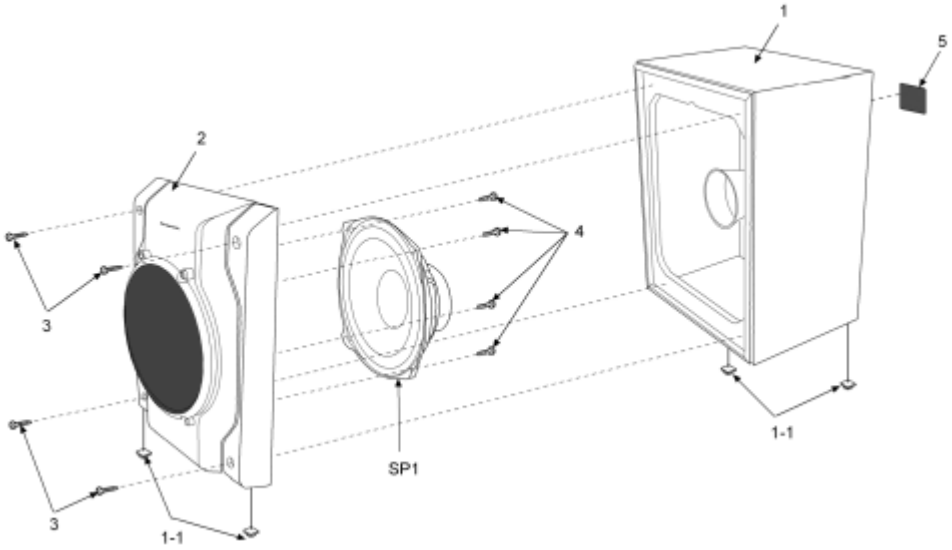

4 Replacement Parts List

Notes :

- Important safety notice :
When replacing any of these components, be sure to use only manufacturer's specified parts shown in the parts list.

- [M] markings in the Remarks columns indicates parts supplied by **PAVCSG .**

Ref. No.	Part No.	Part Name & Description	Remarks
		CABINET AND CHASSIS	
1	RKPM0091	SPK CABINET ASS'Y	[M]
1-1	RKA0072-KJ	LEG CUSHION	[M]
2	RYPM0190	FRONT PANEL ASS'Y	[M]
3	XTB4+16AFZ-A	TAPPING SCREW	[M]
4	XTB4+10G-A	SCREW (SUBWOOFER)	[M]
		PACKING MATERIALS	
P1	RPNM0154B/T-1	POLYFOAM	[M]
P2	RPFM0028	MIRAMAT BAG	[M]
		SPEAKER	
SP1	EAST16PL50B6	SUBWOOFER	[M]

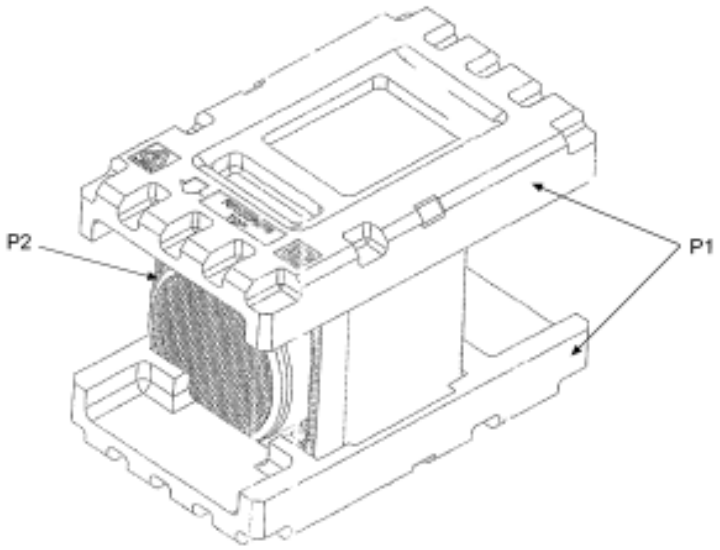
P2
P1