PANASONIC® Service Manual

FET/SOLID STATE FM/AM MULTIPLEX STEREO RADIO-PHONO WITH SEPARATE SPEAKER SYSTEM

MODEL SG-999

SPECIFICATIONS

Frequency Range: FM 87~108MC
AM 525~1605KC
Intermediate Frequency: FM 10.7MC
AM 455KC

Transistors:
- MK-10 FM RF Amplifier (FET)
- 2SC185 FM Mixer
- 2SC469 FM Oscillator
- 2SC184 FM 1st IF Amp. & AM Converter
- 2SC469 FM 2nd IF Amp. & AM 1st IF Amp.
- 2SC469 FM 3rd IF Amp. & AM 2nd IF Amp.
- 2SC183 DC Amplifier
- 2SA101 Distributer
- 2SB175 19KC Amplifier
- 2SB175 38KC Amplifier
- 2SB178 DC Switching
- 2SB117 Squelch & 1st AF Amplifier (Left)
- 2SB117 Squelch & 1st AF Amplifier (Right)
- 2SB117 2nd AF Amplifier (Left)
- 2SB117 2nd AF Amplifier (Right)
- 2SB117 3rd AF Amplifier (Left)
- 2SB117 3rd AF Amplifier (Right)
- 2SB473, 2SB473 } Output (push-pull) (Left)
- 2SB473, 2SB473 } Output (push-pull) (Right)

Diodes:
- SC-15 FM AFC
- 1S1211, 1S1211 } Operation Compensator
- OA70 FM, AM D. AGC
- OA70 AM Detector & AGC
- 20A70, 20A70 } FM Detector
- 20A70, 20A70 } Doubler
- 20A70, 20A70, 20A70, 20A70 } L-R Detector

Thermistors: ERT-D2BGK750S (×4)
Temperature Compensator

Sensitivity: FM 10μV for 30DB Quieting
AM 100μV/m for 50mW Output

Power Output: 10W-10W (P.M.P.O.)

Power Source: 110~120V 60c/s

Speakers: Two 7″ PM Dynamic Speakers (16Ω)
Two 2½″ PM Dynamic Speakers (16Ω)

Cartridge: EPC-35TTAD Ceramic Cartridge

Stylus: EPS-13TTSD Flipover Diamond

Phonomotor: AC Motor (117V, 60c/s)

Record Changer: A.A.50-5D2 (BSR) 4 Speed

Cabinet Dimensions:
Tuner Cabinet
17⅞″ (Wide) × 6 11/16″ (High) × 16 15/16″ (Deep)
Speaker System
10 7/16″ (Wide) × 13 13/16″ (High) × 5⅞″ (Deep)

Net Weight: Tuner 30 lb. 14 oz.
Speaker System 5 lb. 3 oz. ×2

MATSUSHITA ELECTRIC CORP. OF AMERICA
Pan-Am Bldg., 200 Park Ave., New York, N.Y. 10017
HAWAII/MATSUSHITA ELECTRIC OF HAWAII, INC. 205 Kalihi St., Honolulu, Hawaii 96819
CANADA/MATSUSHITA ELECTRIC OF CANADA LTD. Kipling Ave., North, Rexdale, Ont.

www.hifiengine.com

APPEARANCE PARTS IDENTIFICATION

REPLACEMENT PARTS

Cabinet Complete (SYK-268)

Speaker System Complete (SYK-270)

Fig. 1 FRONT VIEW

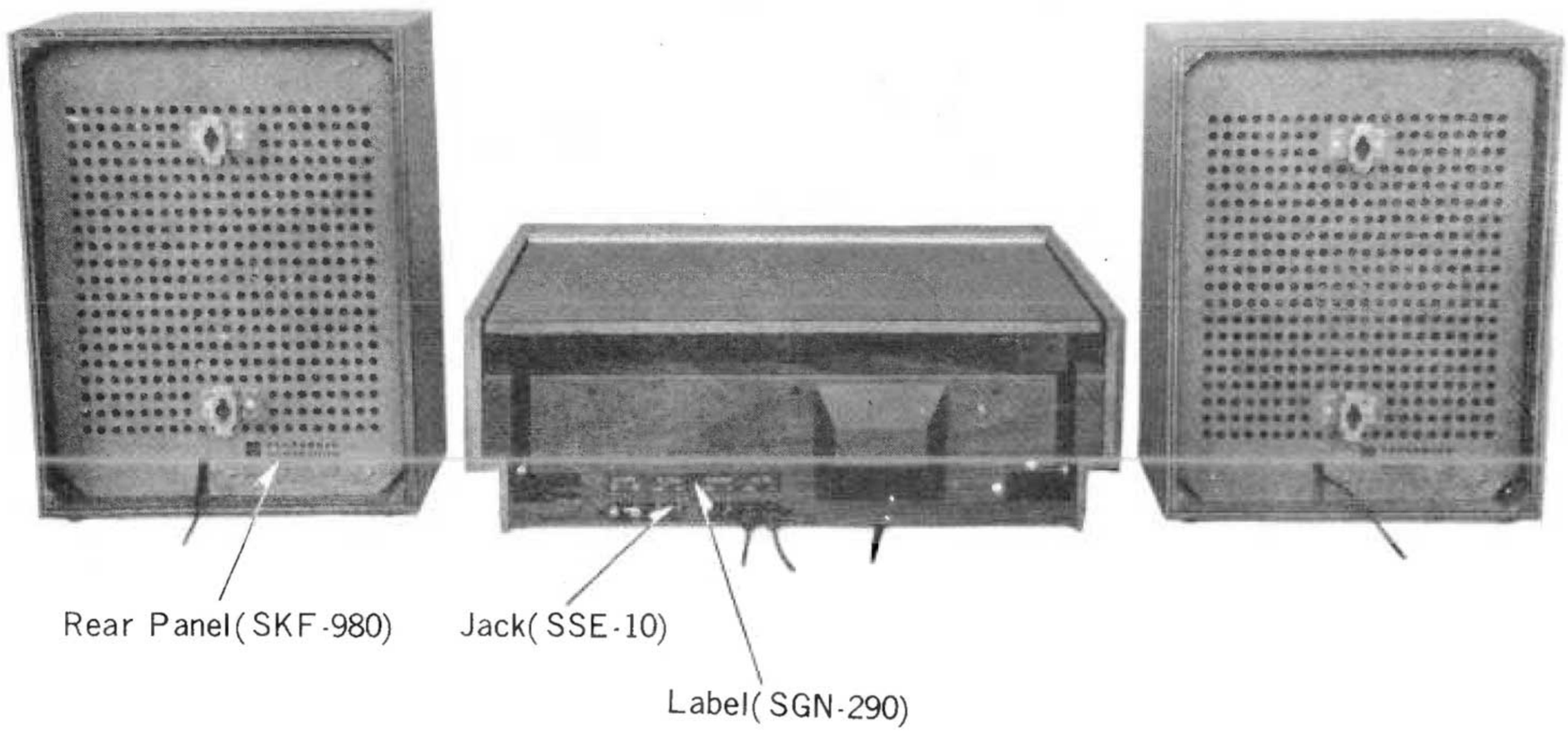

Fig. 2 BACK VIEW

www.hifiengine.com

PARTS IDENTIFICATION

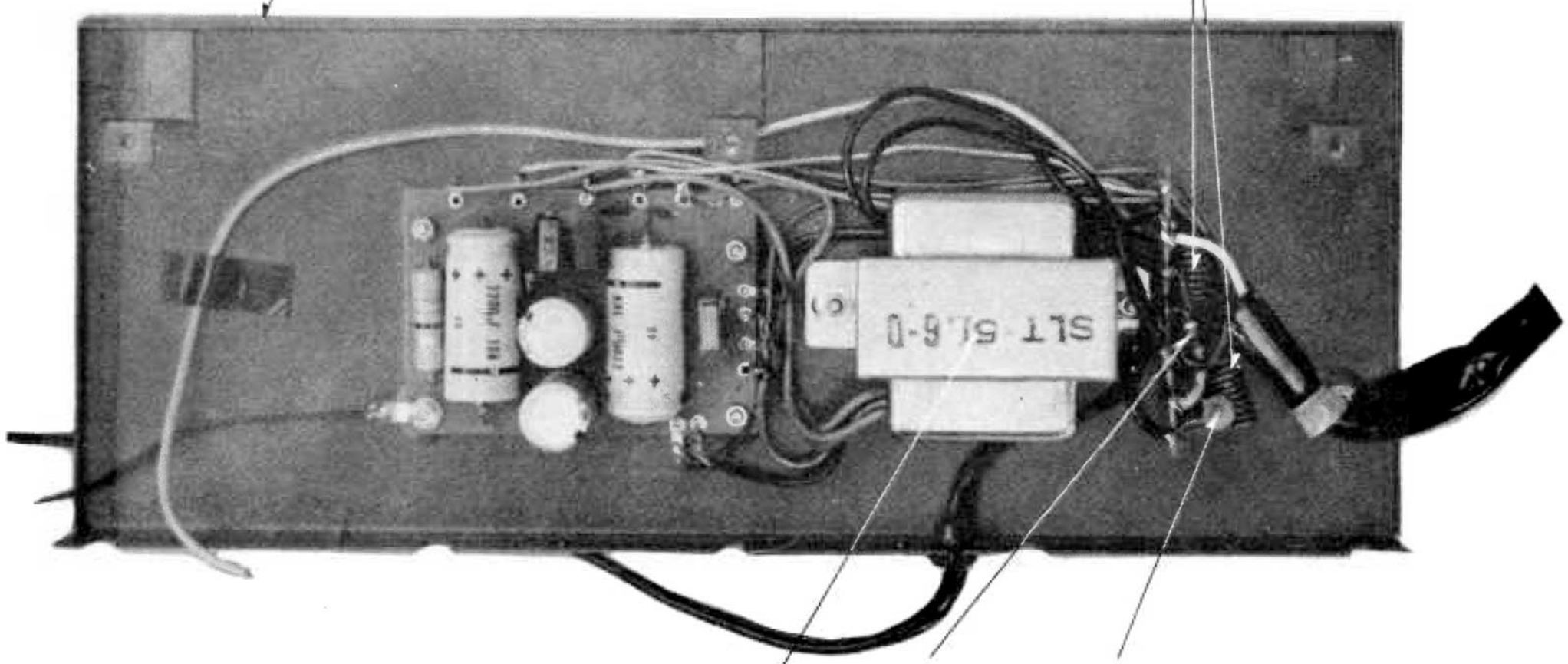

Fig. 3 POWER CHASSIS

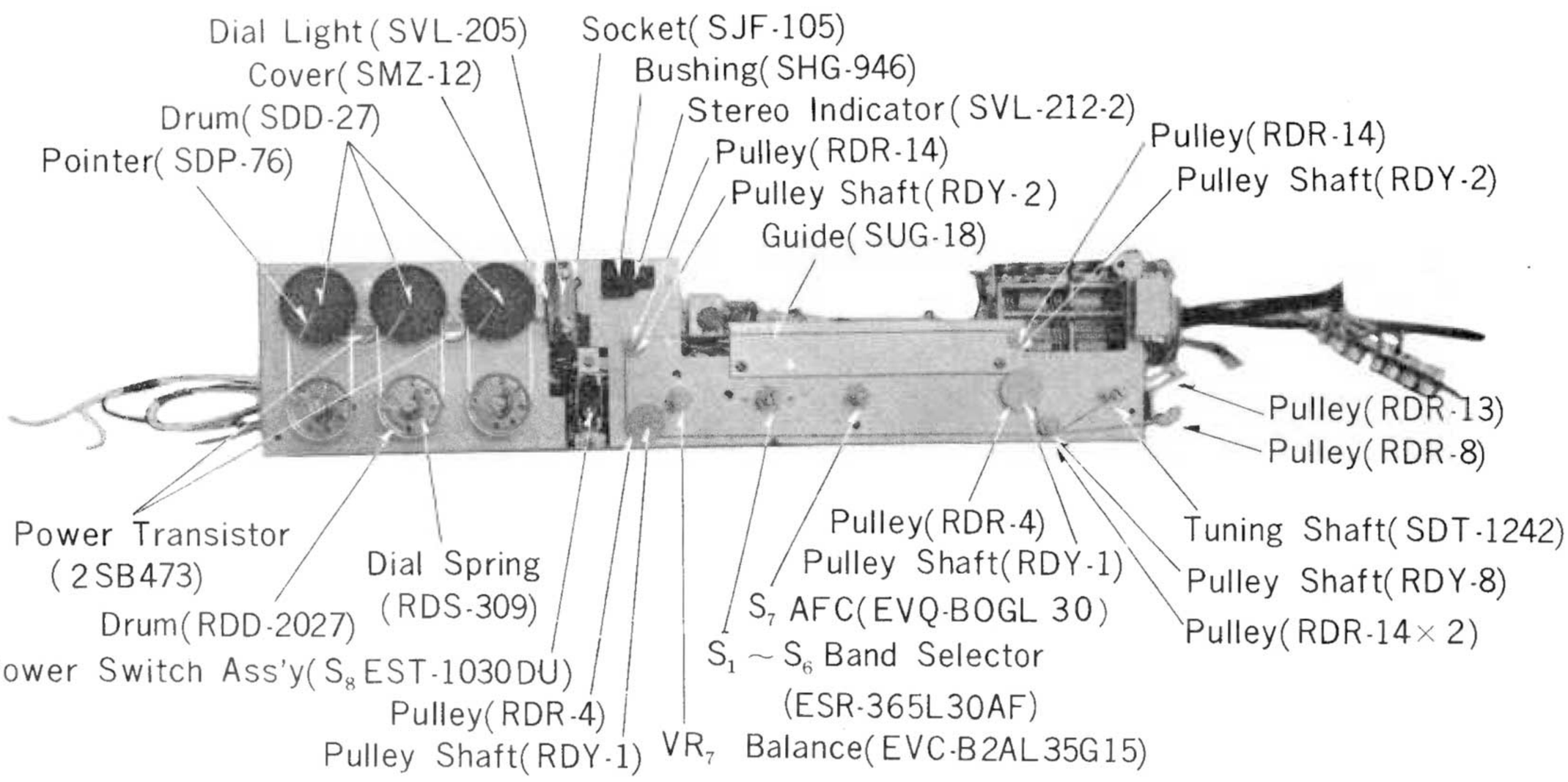

Fig. 4 CHASSIS

www.hifiengine.com

CABINET PARTS IDENTIFICATION

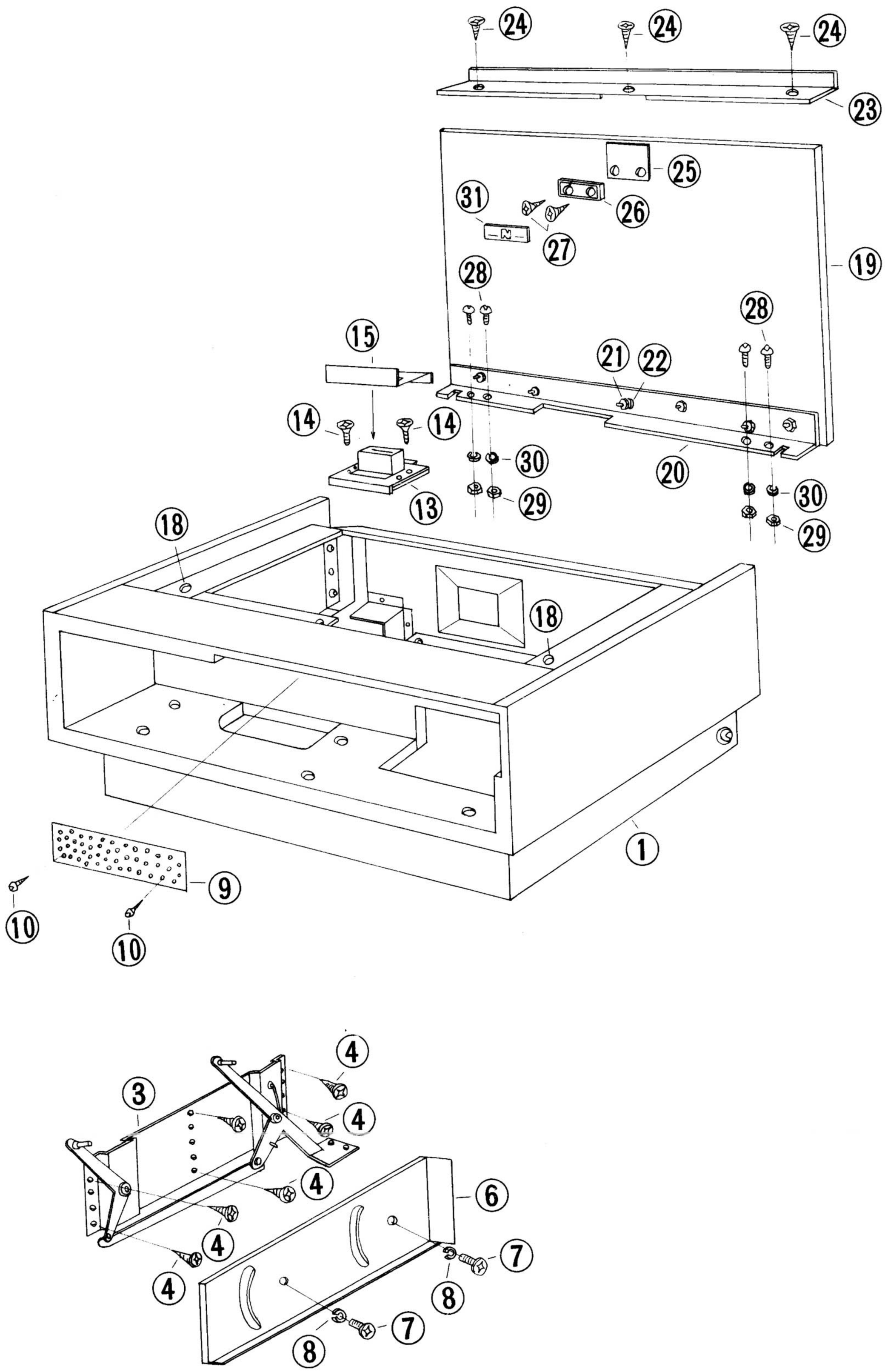

Fig. 5 CABINET

www.hifiengine.com

DISASSEMBLY INSTRUCTION

To Remove Speaker (Refer to Fig. 6)

1. Remove six (6) rear panel mounting screws, Nos 1～6, as illustrated in Fig. 6.
2. Unsolder lead from speaker terminal.
3. Remove eight (8) speaker mounting nuts, Nos. 1～8, as illustrated in Fig. 7.
4. To reassemble, reverse the above procedure.

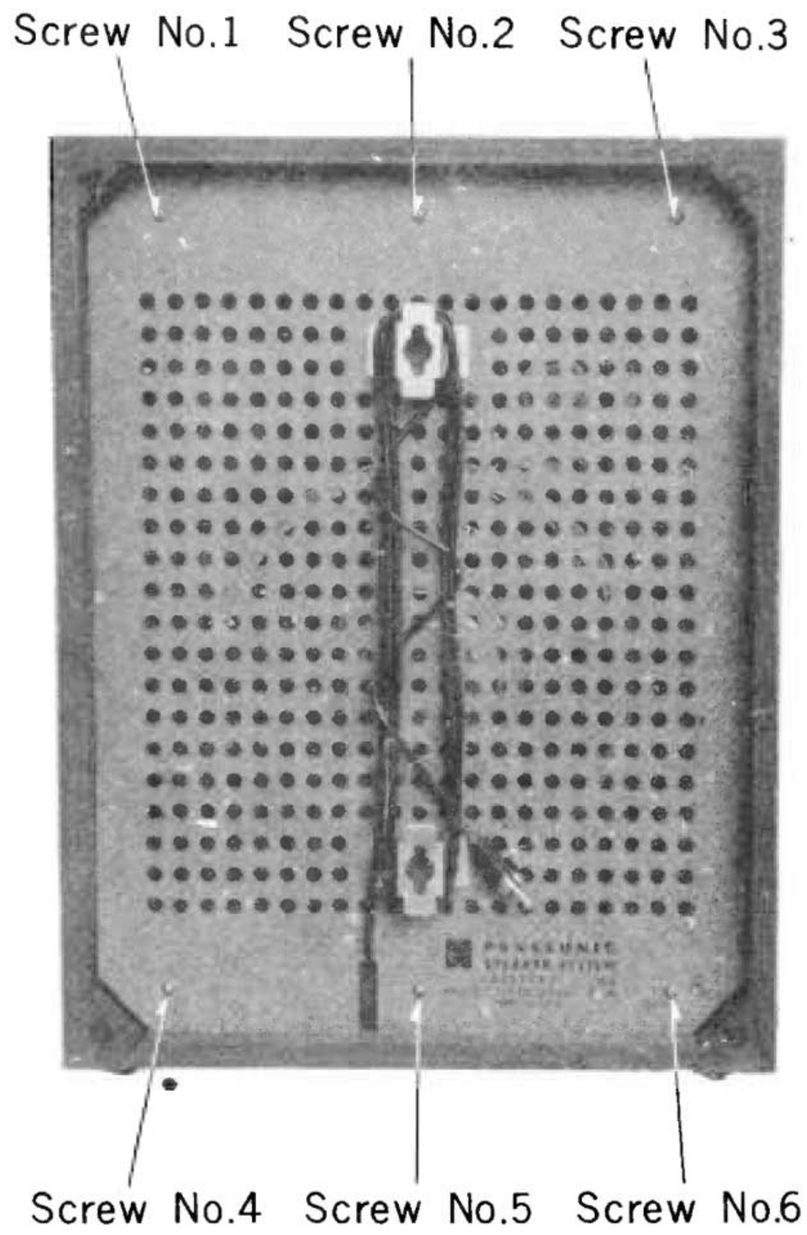

Fig. 6

To Remove Baffle Board (Refer to Fig. 6,7)

1. Remove six (6) rear panel mounting screws, Nos. 1～6, as illustrated in Fig. 6.
2. Remove eight (8) speaker mounting nuts, Nos. 1～8, as illustrated in Fig. 7.
3. Remove six (6) baffle board mounting nuts, Nos. 9～14, as illustrated in Fig. 7.
4. To reassemble, reverse the above procedure.

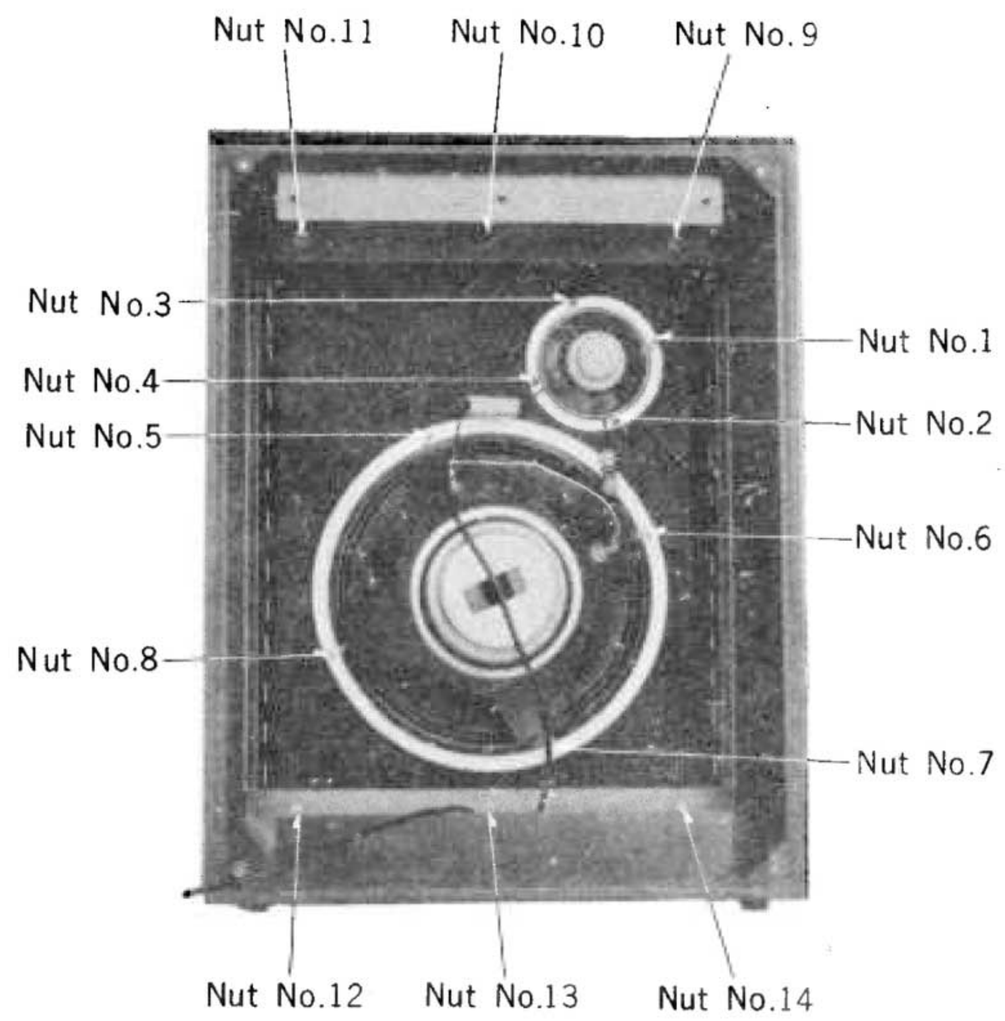

Fig. 7

www.hifiengine.com

To Remove Power Chassis (SUA-980) (Refer to Fig. 8, 9 & 10)

1. Remove five (5) bottom board mounting screws, Nos. 1～5, as illustrated in Fig. 8.
2. Remove seven (7) power chassis mounting screws, Nos. 1～7, as illustrated in Fig. 9.
3. Unsolder lead (sky & black) from FM antenna lug and jack.
4. Remove one (1) red chassis mounting screw, No. 4, as illustrated in Fig. 10.
5. Unsolder lead from tielugs-1 and 2, as illustrated in Fig. 10.
6. Remove two (2) cable clamp mounting screws, Nos. 7～8, as illustrated in Fig. 10.
7. To reassemble, reverse the above procedure.

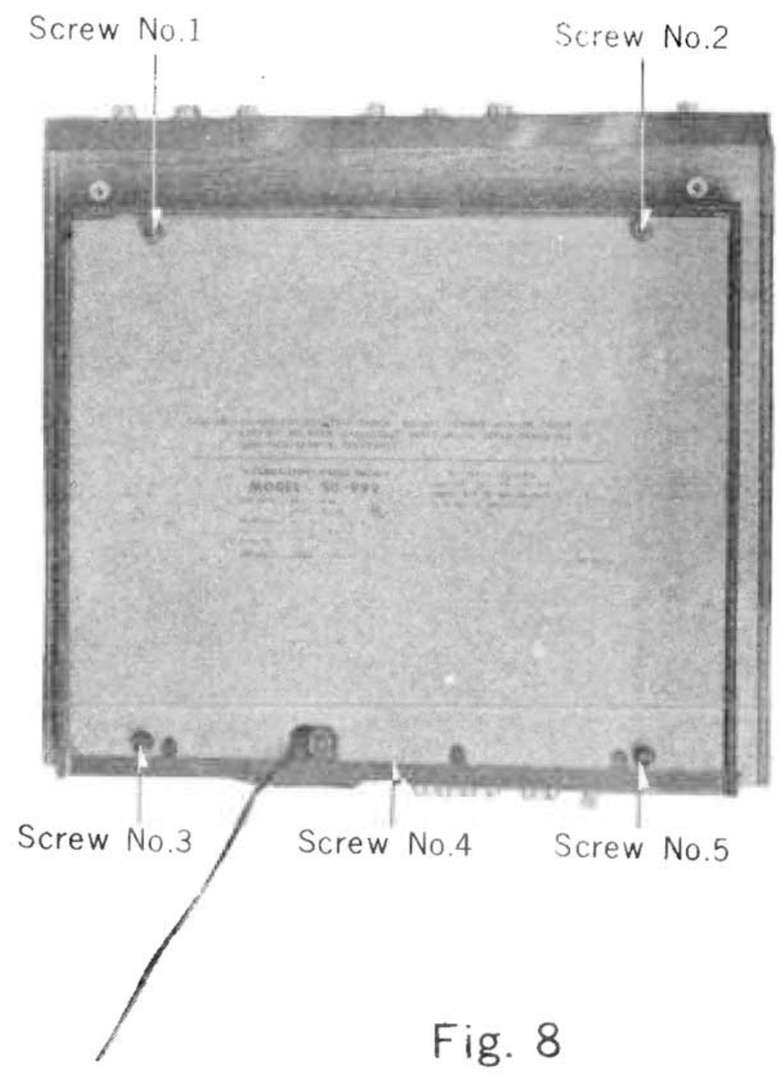

Fig. 8

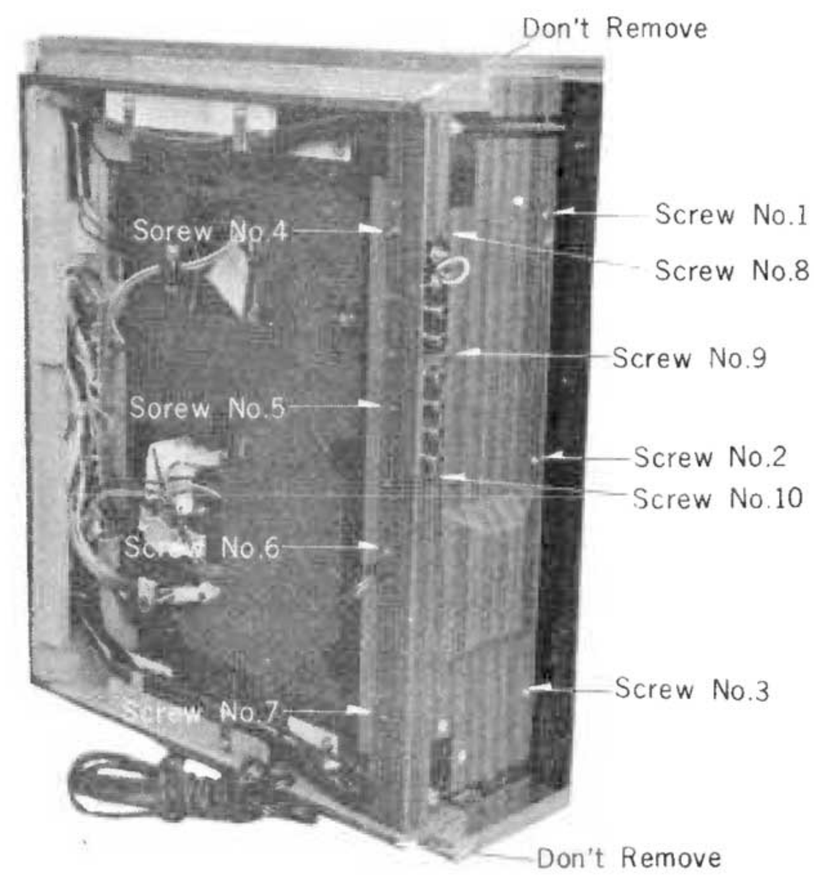

Fig. 9

To Remove Chassis (Refer to Fig. 8, 9,10)

1. Remove Power chassis. Refer to remove Power chassis guide.
2. Remove three (3) jack mounting screws and nuts, No. 8～10. as illustrated in Fig. 9.
3. Remove five (5) cable clamp mounting screws, Nos. 9～13, as illustrated in Fig. 10.
4. a) Unsolder lead (black, yellow & white) from jack.
   b) Unsolder lead from tielug-3, as illustrated in Fig. 10.
5. Remove Six (6) red chassis mounting screws, Nos. 1～6, as illustrated in Fig. 10.
6. Unsolder lead (black) from shield cover (tuning gang).
7. To reassemble, reverse the above procedure.

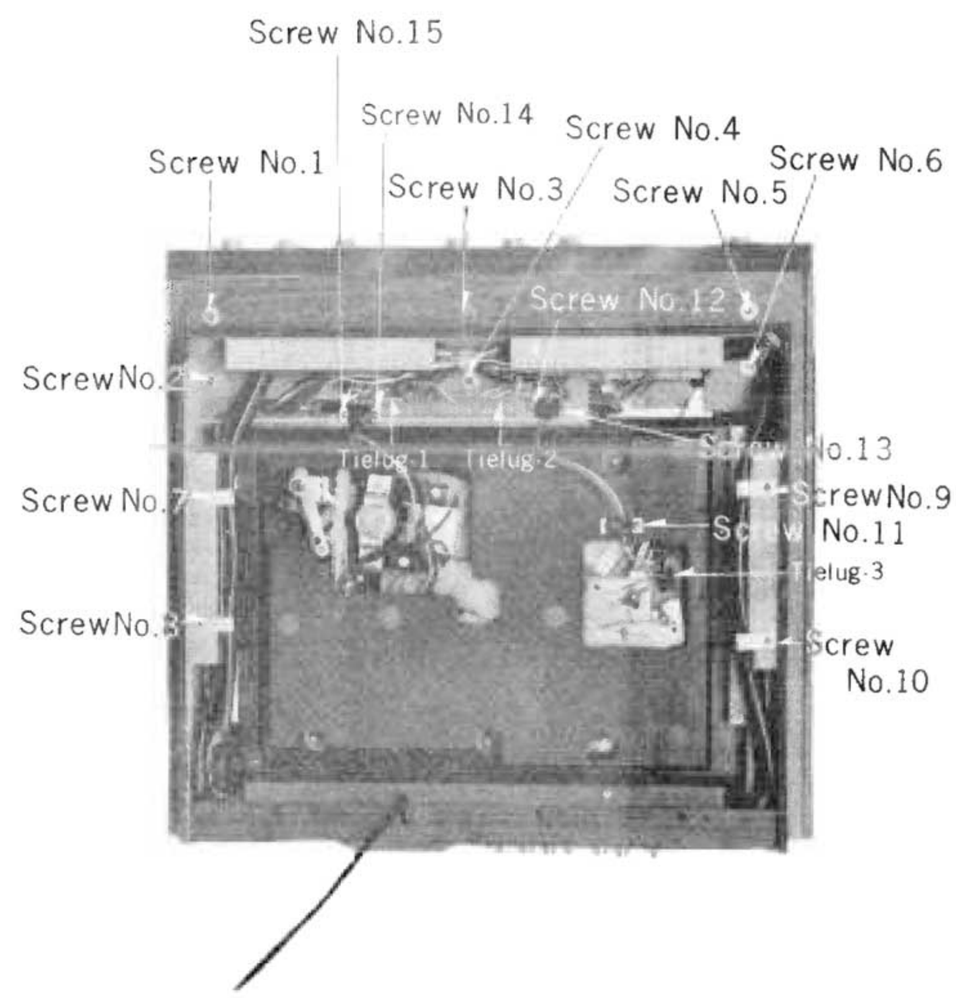

Fig. 10

www.hifiengine.com

To Remove Changer (Refer to Fig. 8, 10 & 11)

1. Remove five (5) bottom board mounting screws, No1～5, as illustrated in Fig. 8 on page 5.
2. Remove three (3) cable clamp mounting screws, Nos. 11, 14 & 15, as illustrated in Fig. 10 on page 5.
3. Unsolder leads from tielug-1 (red, black, brown wires) and tielug-3,(brown & gray cables) as illustrated in Fig. 10.
4. Remove four (4) Washer & Clips, No. 1～No. 4, as illustrated in Fig. 11.
5. To reassemble, reverse the above procedure.

To Remove Changer Mounting Board (Refer to Fig. 10 & 11)

1. Remove changer. Refer to remove changer guide.
2. Remove four (4) cable clamp mounting screw, Nos. 7～10, as illustrated Fig. 10 on page 5.
3. Remove eight (8) changer board mounting nuts, Nos. 1～8, as illustrated Fig. 11.
4. To reassemble, reverse the above procedure.

To Remove Escutcheon From Chassis (Refer to Fig. 12)

1. Remove chassis. Refer to remove chassis guide on page 5.
2. Remove six (6) control knobs from cabinet front.
3. Remove dial pointer from dial cord.
4. Remove six (6) escutcheon mounting screws Nos. 1～6. as illustrated in Fig. 12.
5. To reassemble, reverse the above procedure.

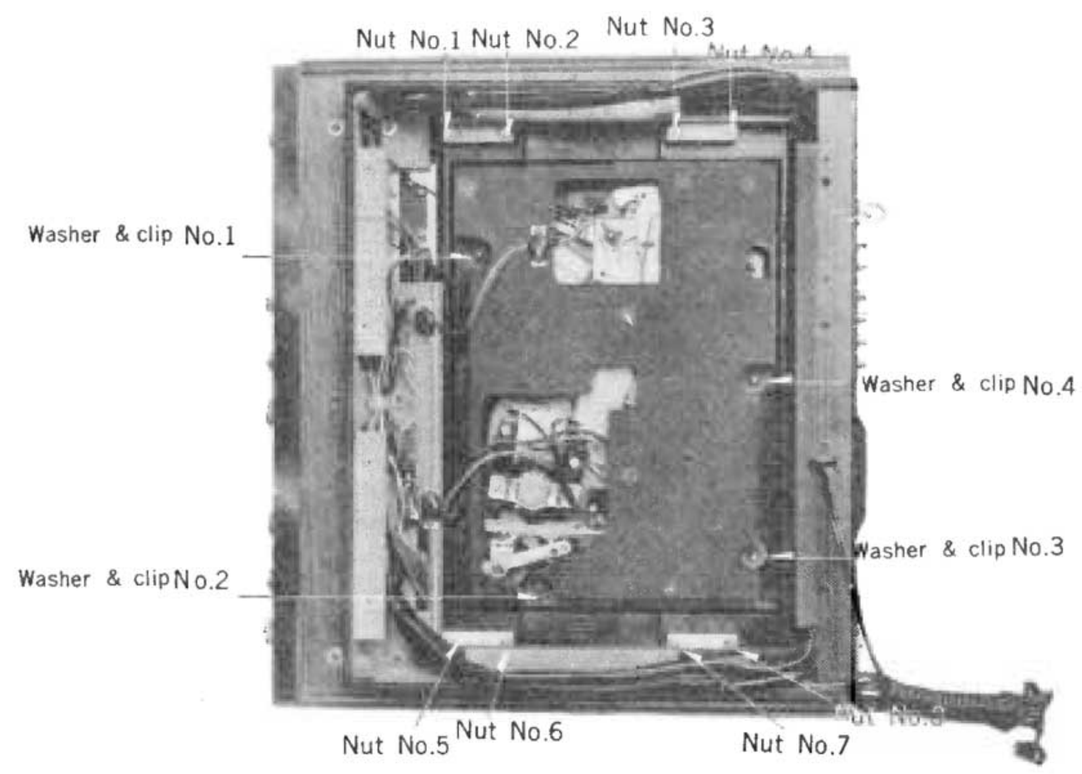

Fig. 11

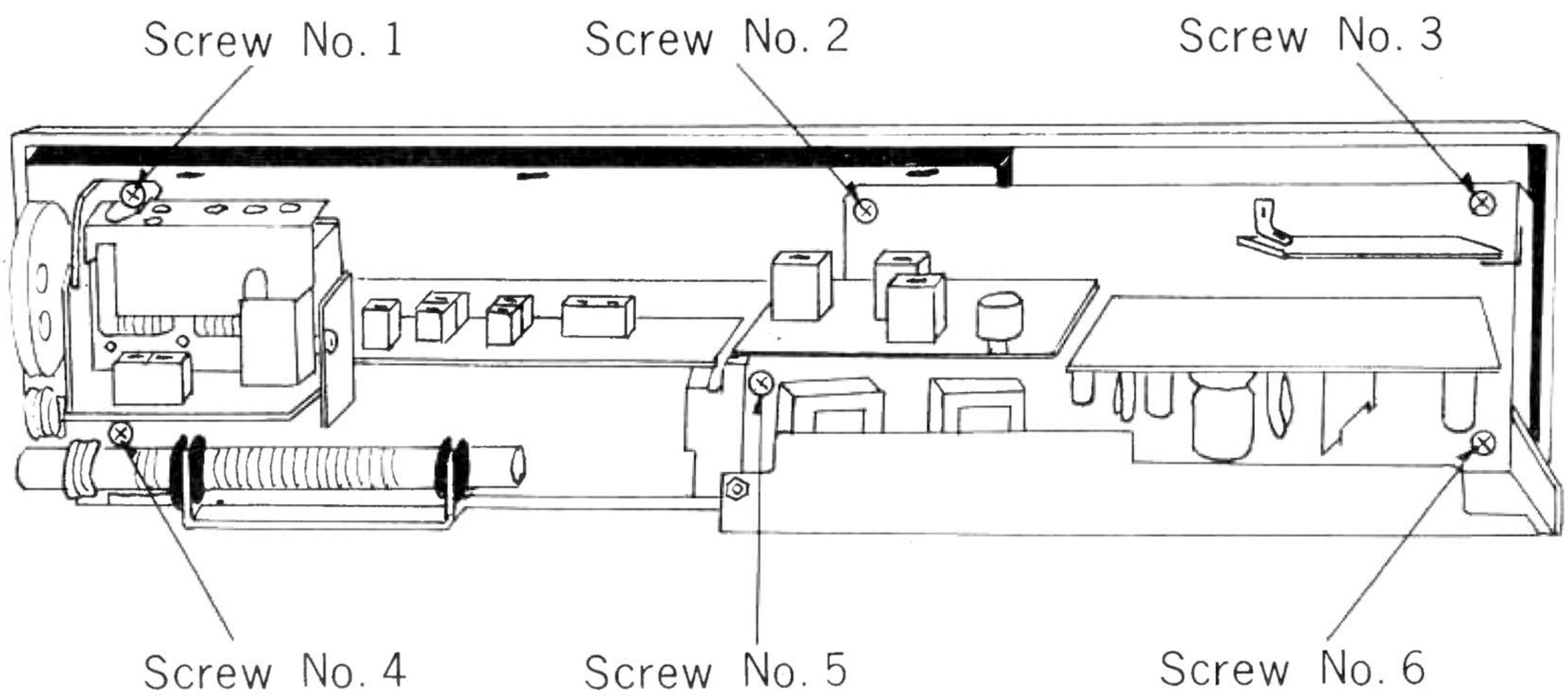

Fig. 12

www.hifiengine.com

CORD STRINGING GUIDE

DIAL CORD STRINGING GUIDE

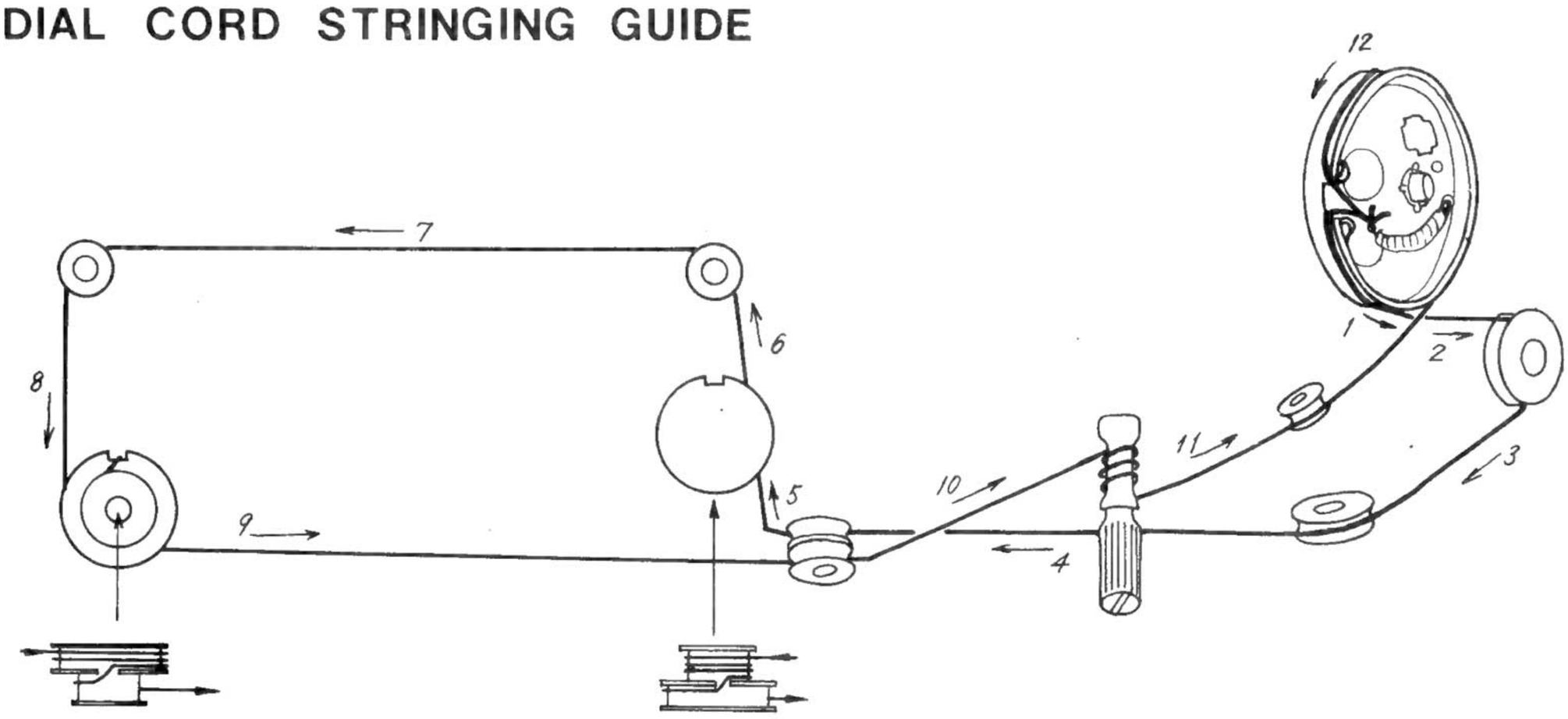

NOTES:

1. Dial cord length is 59″.
1. Tuning gang is positioned at maximum capacity.
3. Arrow marks (1～12) indicate correct order and direction of stringing dial cord.
4. Cement dial cord ends.

To Mount Dial Pointer

1. Set tuning gang to fully closed posion.
2. Set dial pointer to "0" point of dial scale.
3. Attach dial cord to dial pointer.

INDICATOR CORD STRINGING GUIDE.

NOTES:

1. Dial cord length is 28″.
2. Set Bass, Treble & Loud controls fully counter-clockwise
3. Arrow marks(1～8) indicate correct order and direction of stringing dial cord.
4. Cement dial cord ends.

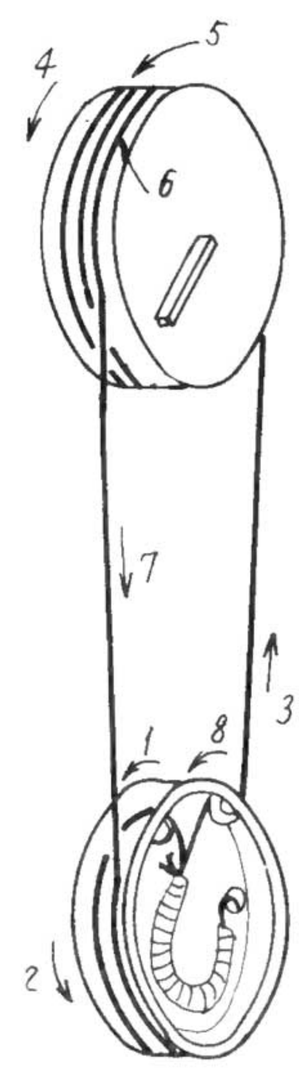

www.hifiengine.com

SCHEMATIC DiAGRAM MODEL SG-999

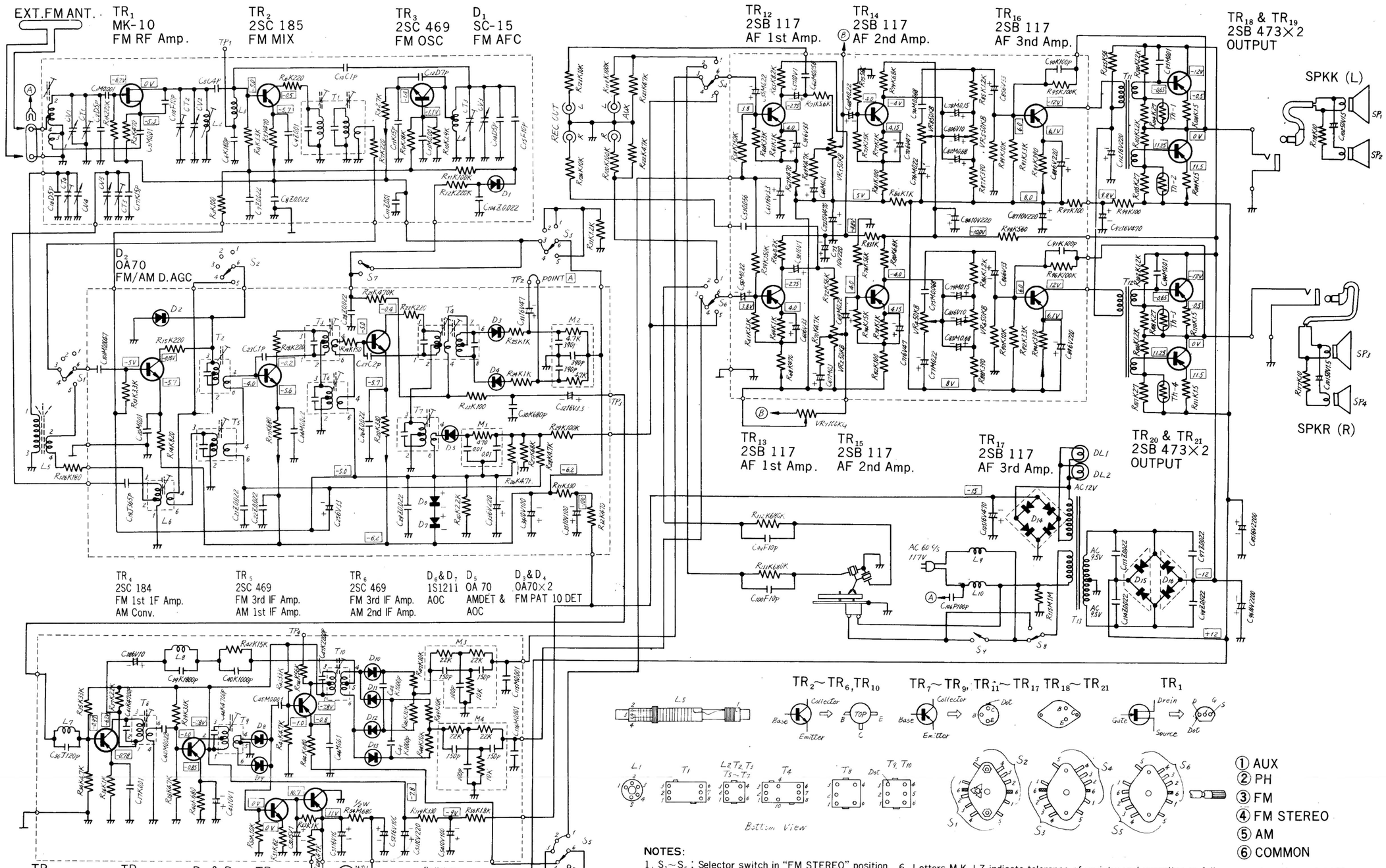

NOTES:

1. $S_1 \sim S_6$: Selector switch in "FM STEREO" position.
2. S_7 : FM AFC ON-OFF switch in "ON" position.
3. S_8 : Power source switch in "ON" position.
4. S_9 : Shut off switch in "OFF" position.
5. Voltage measurments are under no signal condition at FM STEREO position taken with a vacuum tube volt meter and are positive with respect to ground.
6. Letters M.K.J.Z indicate tolerance of resistor and capacitor as follows M=±20%, K=±10% J=±5%, Z=±80% −20%
7. All resistor values in ohms. (K=1000Ω)
8. All capacitor values in micro farods. (P=μμF)

ALIGNMENT INSTRUCTIONS

FREQUENCY & DISTANCE ON DIAL SCALE

To accurately align the proper frequencies to the dial scale, refer to Table and mark the edge of the dial scale plate accordingly, using the "Start Point" mark on the dial scale as a reference point.

TABLE

Band	Frequency	Distance from "Start Point"	
AM	550kc/s	10.4mm	13/32"
	1500kc/s	94.7mm	3 3/4"
FM	90Mc/s	28.0mm	1 1/8"
	106Mc/s	87.5mm	3 7/16"

AM-IF & RF ALIGNMENT

1. AM/FM-IF & RF ALIGNMENT

Output of signal generator should be no higher than necessary to obtain an output reading.
Set loudness control to maximum.
Set balance control to left.
Set bass control to maximum.
Set treble control to maximum.
Set band selector switch to AM.
Maintain line voltage at 117volts

SIGNAL GENERATOR COUPLING	SIGNAL GENERATOR FREQUENCY	RADIO DIAL SETTING	INDICATOR	ADJUST	REMARKS
Fashion loop of several turns of wire and radiate signal into loop of receiver.	455 kc/s (400∾Mod.)	Point of noninterference. (on/about 600 kc/s)	Output meter across EXT Speaker Jack (L) (Imp. 16 Ω)	T_5 (1st IFT) T_6 (2nd IFT) T_7 (3rd IFT)	Adjust for maximum output.
〃	550 kc/s (400∾Mod.)	550 kc/s	〃	L_5 (ANT Coil) L_6 (OSC Coil)	Adjust for maximum output by sliding coil (L_5) along ferrite core.
〃	1500 kc/s (400∾Mod.)	1500 kc/s	〃	CT_5 (OSC Trimmer) CT_4 (ANT Trimmer)	Adjust for maximum output. Repeat steps (2) and (3).

Notes: 1. Cement antenna bobbin with wax after completing alignment.
2. Make certain that speaker system is connected to the tuner when aligning.

FM-IF AND DETECTOR ALIGNMENT WITH OSCILLOSCOPE

EQUIPMENT REQUIRED

Signal generator that provides 10.7 Mc/s marker.
Sweep generator that provides 10.7 Mc/s center frequency and 400 kc/s sweep width.

OSCILLOSCOPE

Set sweep selector of oscilloscope to "External Sweep". Apply 60∾ sweep signal from sweep generator to horizontal input terminals of oscilloscope.
Set band selector switch to FM.
Set loudness control to minimum.
Set bass control to maximum.
Set treble control to maximum.
Set balance control to left.
Set AFC switch to "OFF".
Maintain line voltage at 117 volts.

Note: Unsolder lead between test point TP_2 and Point [A] before alignment and resolder it after alignment.

SWEEP GENERATOR COUPLING	SIGNAL GENERATOR COUPLING	RADIO DIAL SETTING	INDICATOR	ADJUST	REMARKS
High side thru. .001 mfd to point TP_1. Common to chassis.	High side thru. .001 mfd to point TP_1. Common to chassis.	Point of noninterference. (on/about 98 Mc/s)	Connect vert. amp. of scope to point TP_2. Common to chassis.	T_1 (FM 1st IFT) T_2 (FM 2nd IFT) T_3 (FM 3rd IFT) T_4-a)(FM DISC IFT)	Adjust for maximum amplitude and proper linearity between ±100 kc/s markers. (Refer to Fig. 14)
〃	〃	〃	Connect vert. amp. of scope to point TP_3. Common to chassis.	T_4-b) (FM DISC IFT)	Adjust T_4-b) so that 10.7 Mc/s marker is at the center. (Refer to Fig. 15)

Note: 1. Remove line cord antenna from FM external antenna terminal when aligning.

www.hifiengine.com

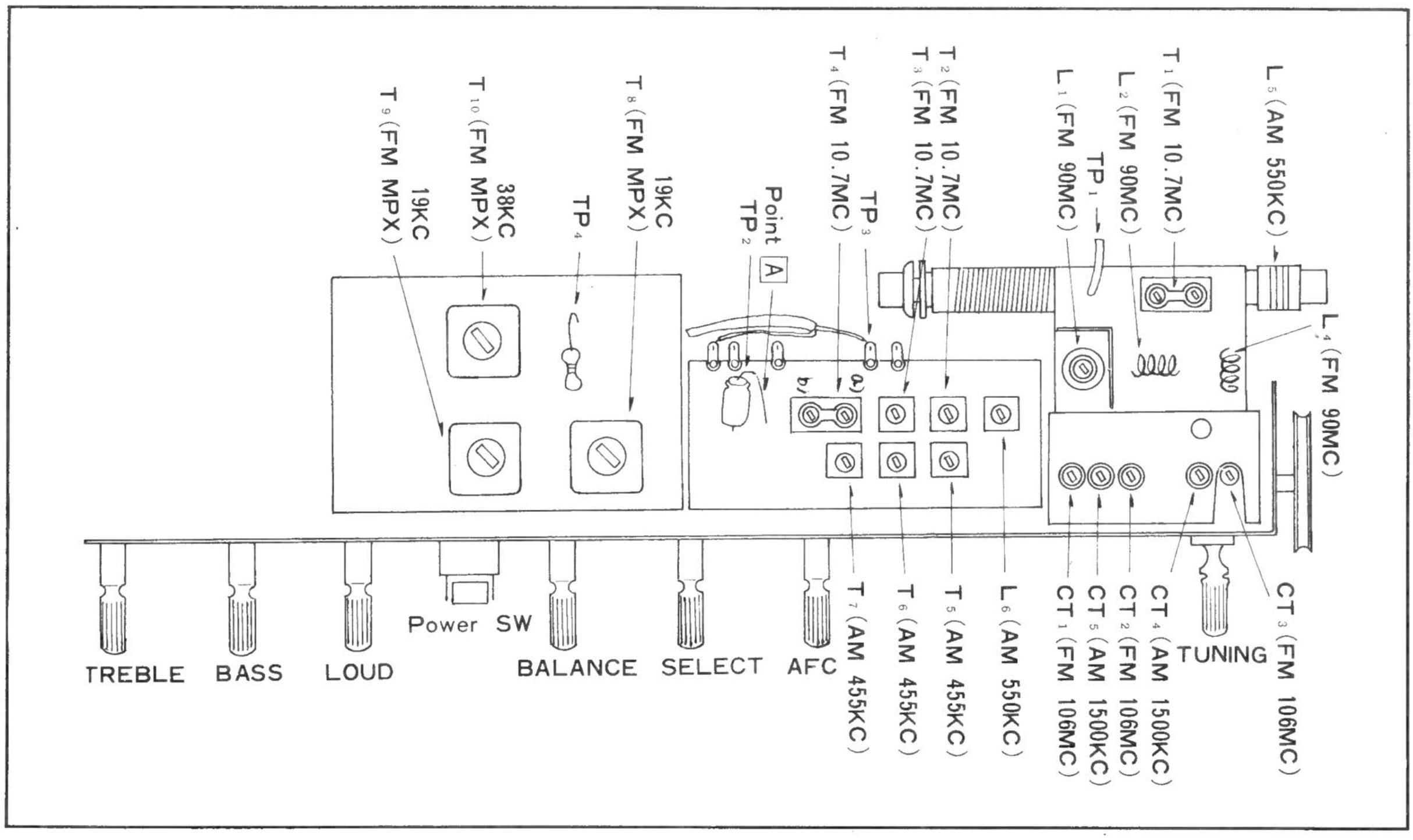

Fig. 13 ALIGNMENT POINTS

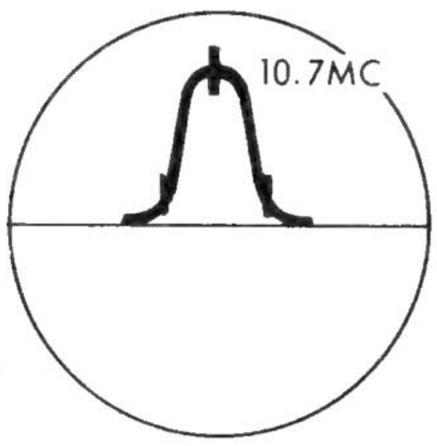

Fig. 14

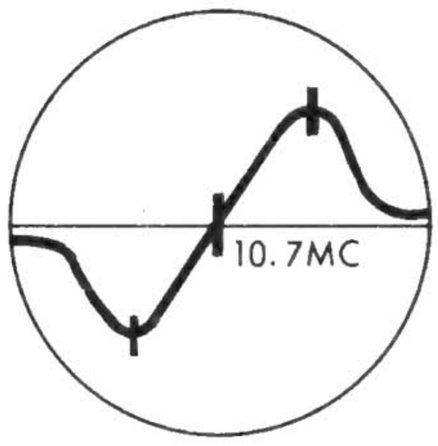

Fig. 15

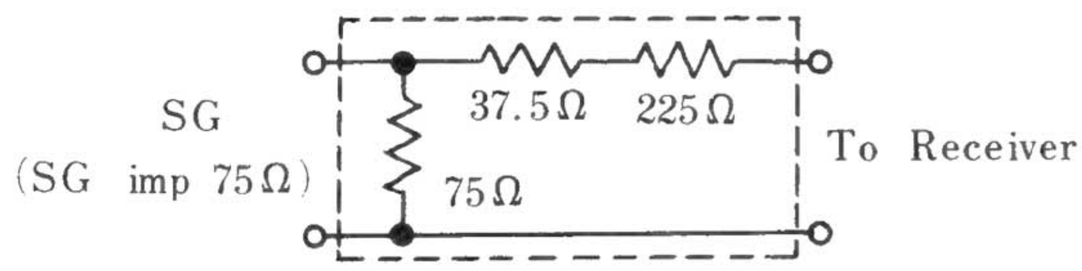

Fig. 16 FM DUMMY ANTENNA

FM-RF ALIGNMENT

Output of signal generator should be no higher than necessary to obtain an output reading.
Set loudness control to maximum.
Set band selector switch to FM.
Set bass control to maximum.
Maintain line voltage at 117 volts.
Set balance control to left.
Set AFC switch to "OFF".
Set treble control to maximum.

SIGNAL GENERATOR COUPLING	SIGNAL GENERATOR FREQUENCY	RADIO DIAL SETTING	INDICATOR	ADJUST	REMARKS
Connect to EXT. FM Antenna terminal through FM Dummy antenna. Common to chassis (Refer to Fig. 16)	90 Mc/s (400~ Mod.)	90 Mc/s	Output meter across EXT Speaker Jack (L) (Imp. 16 Ω)	L_4 (FM OSC Coil) L_1 (FM ANT Coil) L_2 (FM Collector Coil)	Adjust for maximum output.
〃	106 Mc/s (400~ Mod.)	106 Mc/s	〃	CT_3 (FM OSC Trimmer) CT_1 (FM ANT Trimmer) CT_2 (FM Collector Trimmer)	Adjust for maximum output. Repeat steps (3) and (4).

Note: As three output responses will be present, proper tuning is the center frequency.

www.hifiengine.com

CIRCUIT BOARD MODEL SG-999

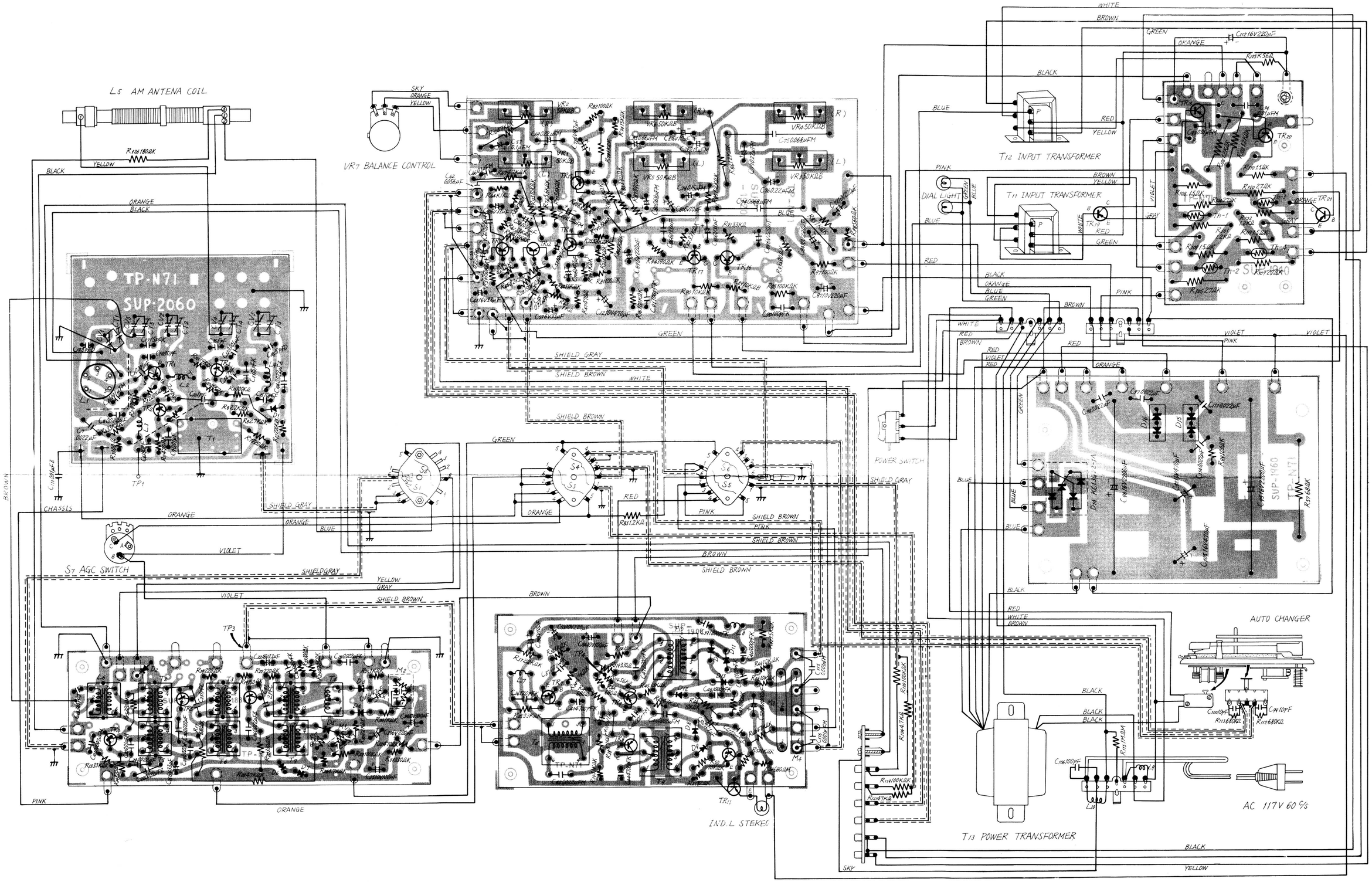

PANASONIC RADIO PHONO

Printed in Japan

2. FM-STEREO ALIGNMENT

19 kc/s AMP. ALIGNMENT

EQUIPMENT REQUIRED

Stereo Modulator····· Connect Stereo Modulator output to EXT. Mod. terminal of signal generator.
Signal Generator····· Modulation Rate of 19 kc/s Pilot Signal·····10%
Output Level·····30 dB
Frequency····· Approximately 89.5 Mc/s.
Oscilloscope
Dummy Antenna·····Refer to Fig. 16.

CONTROL SETTING & PROCEDURE

Tuner····· Band selector switch to "FM STEREO", Treble control to "Center", Bass control to "CENTER", Balance control to "CENTER", AFC Switch to "OFF", Loudness control to audible level of speaker sound, Dial setting to approximately 89.5 Mc/s.

Notes:

1. When aligning, remove line cord antenna attached to External FM Antenna terminal.
2. As three peak output will be present, when adjusting T_8 & T_9, the center peak output is the correct position.

EQUIPMENT CONNECTION		ADJUST	REMARKS
SIGNAL GENERATOR	OSCILLOSCOPE		
Connect to EXT. FM antenna terminal through Dummy antenna. (Refer to Fig. 16)	Connect vert. Amp. of scope to point TP_4. Common to chassis.	T_8 (19 kc/s Pick Up Coil) T_9 (19 kc/s Doubler Coil)	Adjust T_8~T_9 for maximum oscilloscope pattern of 38 kc/s. and muximum brightness of STEREO Indicator.

SEPARATION ALIGNMENT

EQUIPMENT REQUIRED

Stereo Modulator····· Connect Stereo Modulator output to EXT. Mod. terminal of signal generator.
Signal Generator····· Modulation Rate by 19 kc/s Pilot Signal ····· 10%
Modulation Rate by Left Signal····· 27%
Output Level····· 60 dB
Oscilloscope
Dummy Antenna·····Refer to Fig. 16
VTVM
Low pass Filter.

CONTROL SETING & PROCEDURE

Tuner····· Band selector switch to "FM STEREO". Treble control to "CENTER", Bass control to "CENTER", Loudness control to audible level of speaker sound, AFC switch to "OFF", Dial setting to approximately 89.5 Mc/s. Adjust balance control so that output level from both units becomes equal.

www.hifiengine.com

ALIGNMENT CIRCUIT	EQUIPMENT CONNECTION	ADJUST	REMARKS
SEPARATION	Refer to Fig. 17	T_{10} (L-R DETECTOR Coil)	Adjust T_{10} for maximum oscilloscope (A) pattern of 38KC and Adjust T_{10} for minimum indication on VTVM from the right side output when the left side of stereo modulation is modulated. Adjust T_{10} in the same way for the left side.

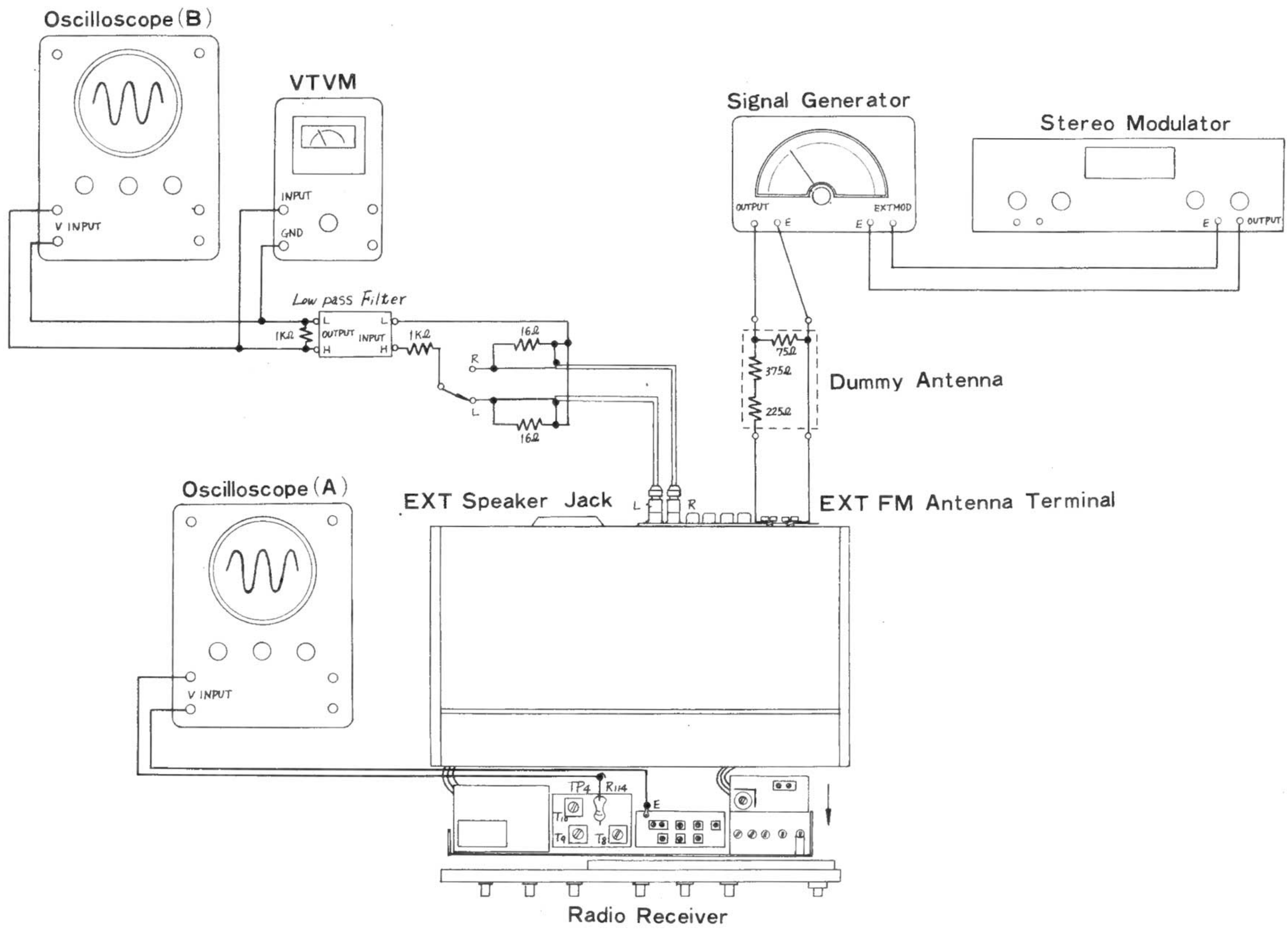

Fig. 17 RECOMMENDED EQUIPMENT CONNECTION FOR SEPARATION ALIGNMENT

www.hifiengine.com

PARTS IDENTIFICATION

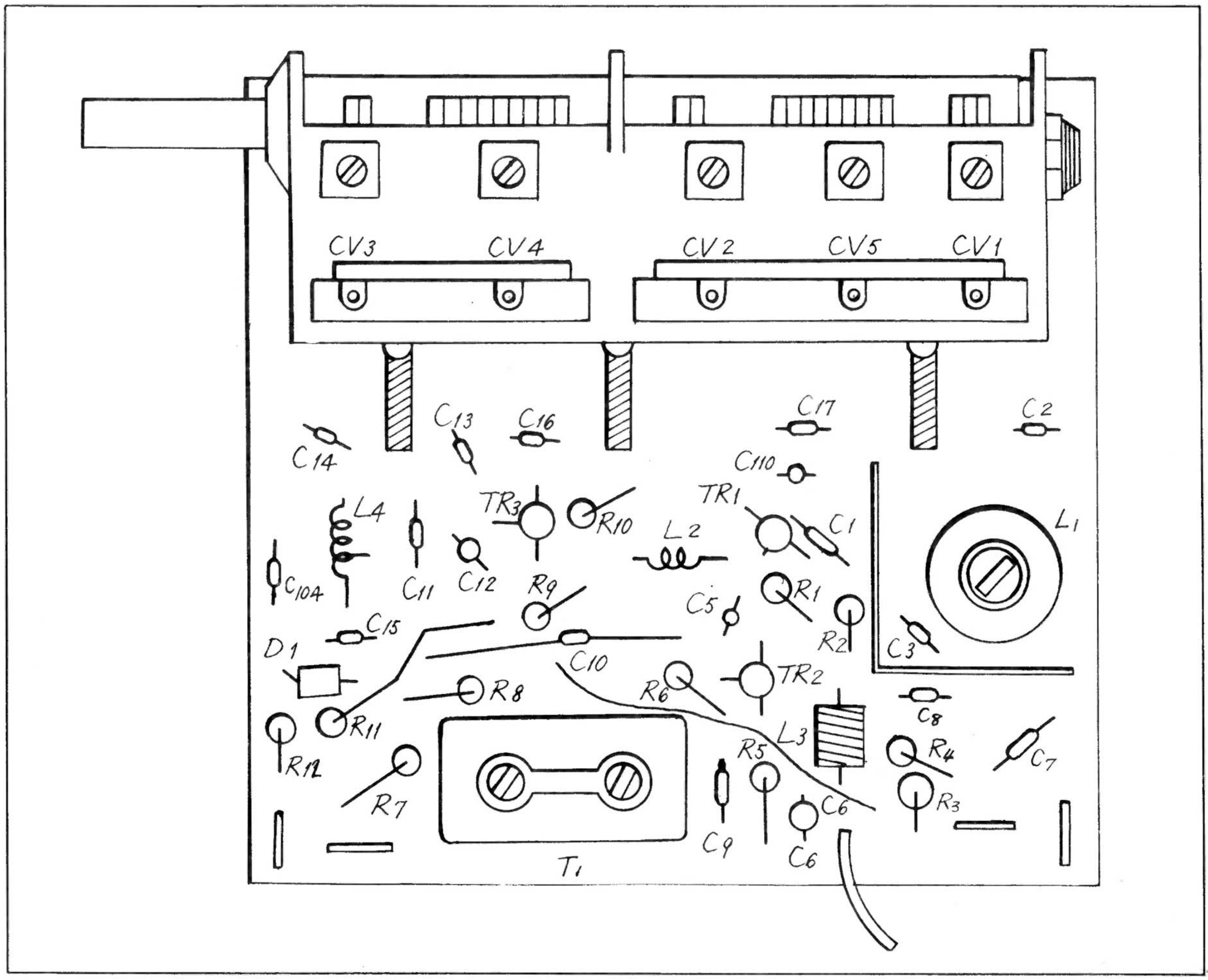

Fig. 18 FM RF SECTION

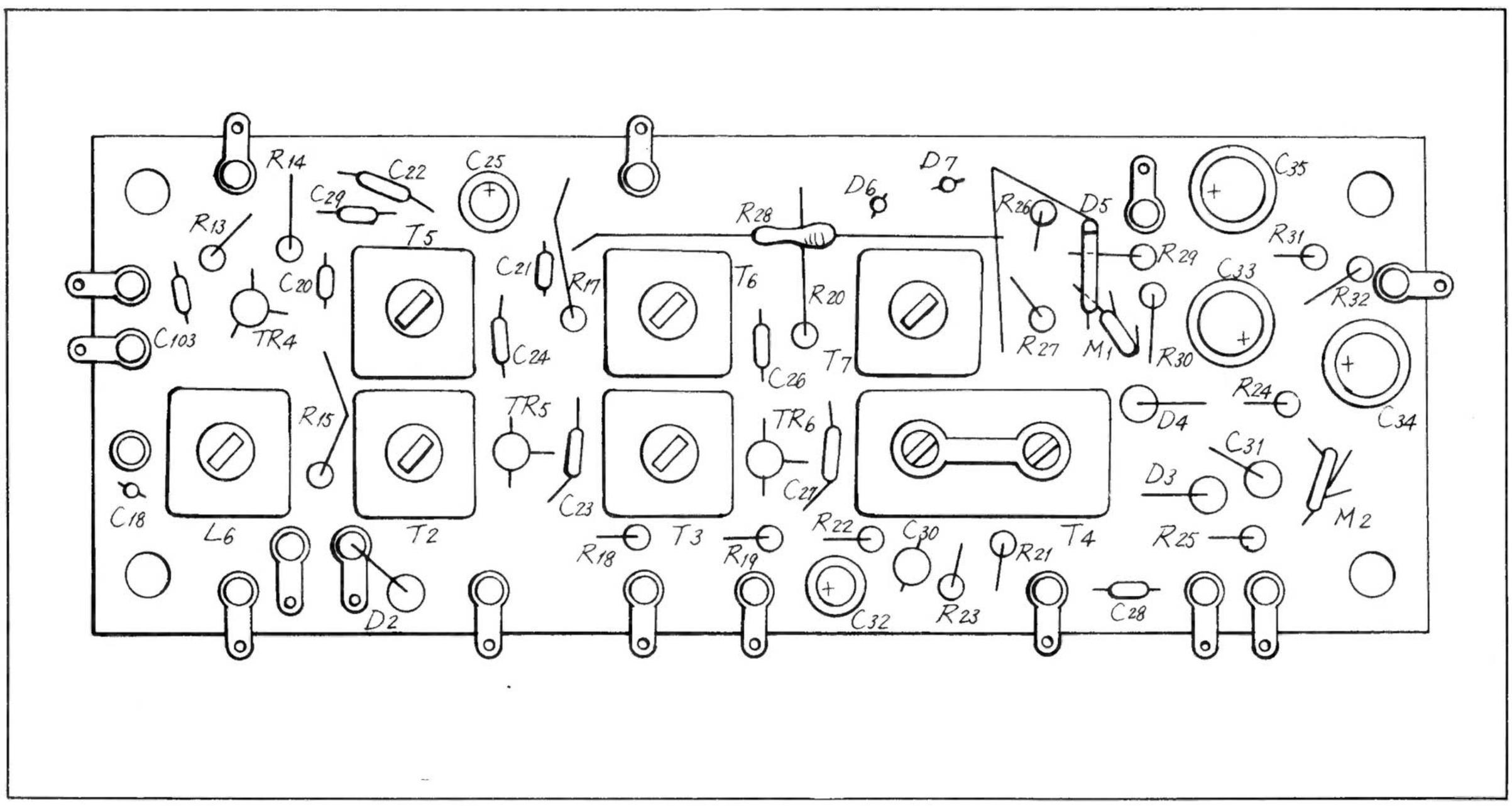

Fig. 19 AM RF & IF SECTION

www.hifiengine.com

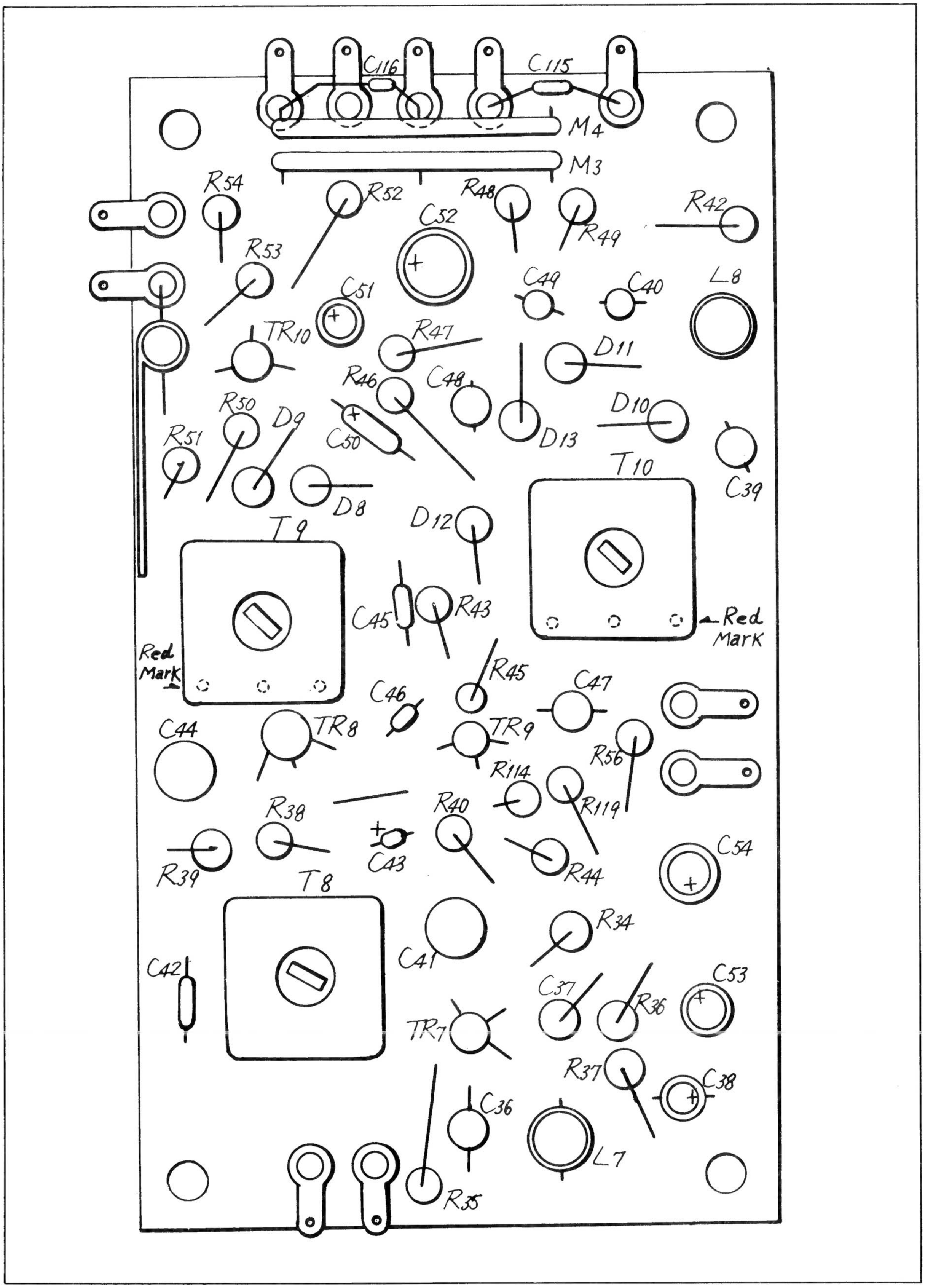

Fig. 20 MULTIPLEX SECTION

www.hifiengine.com

PARTS IDENTIFICATION (Continued)

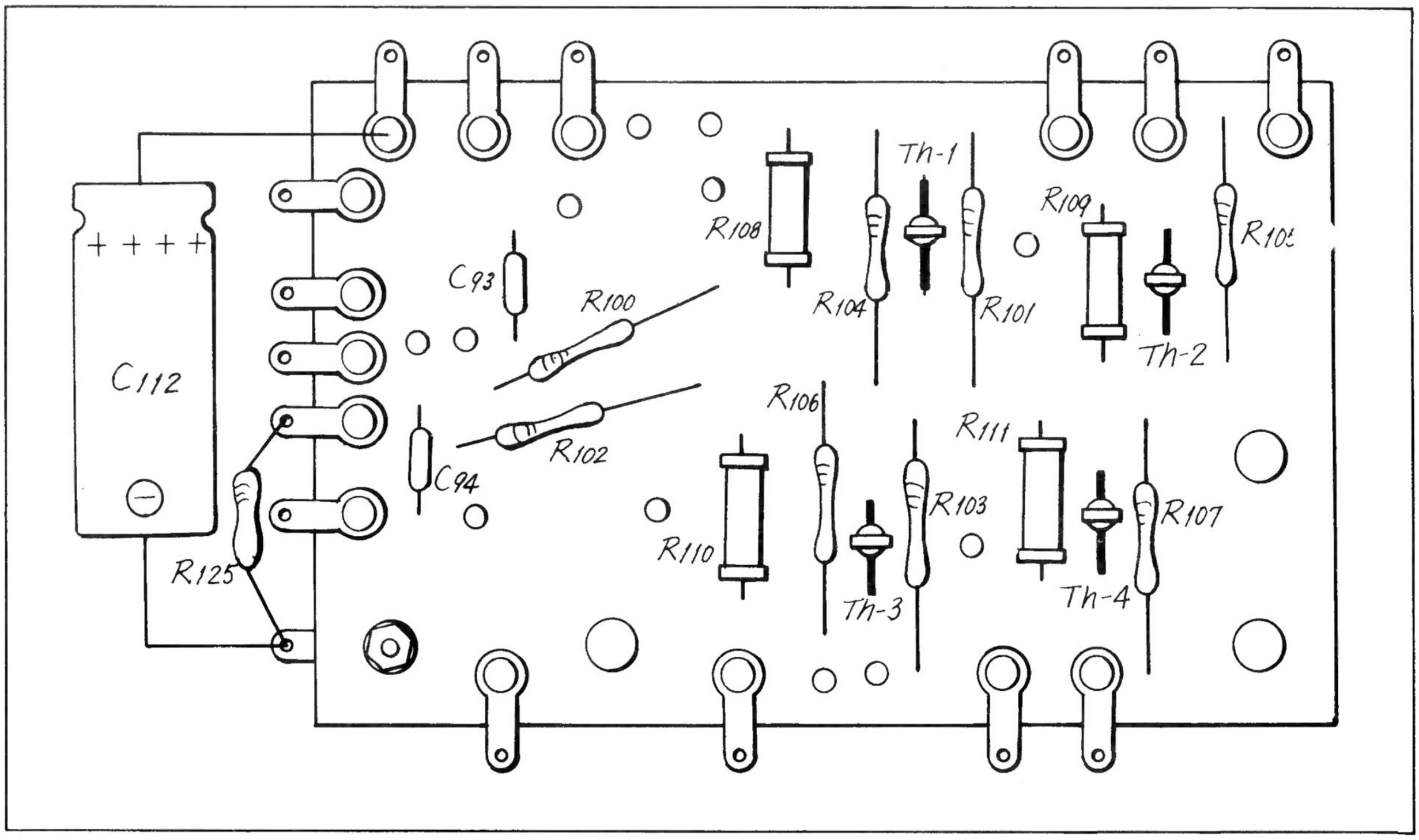

Fig. 21 AUDIO (OUTPUT) SECTION

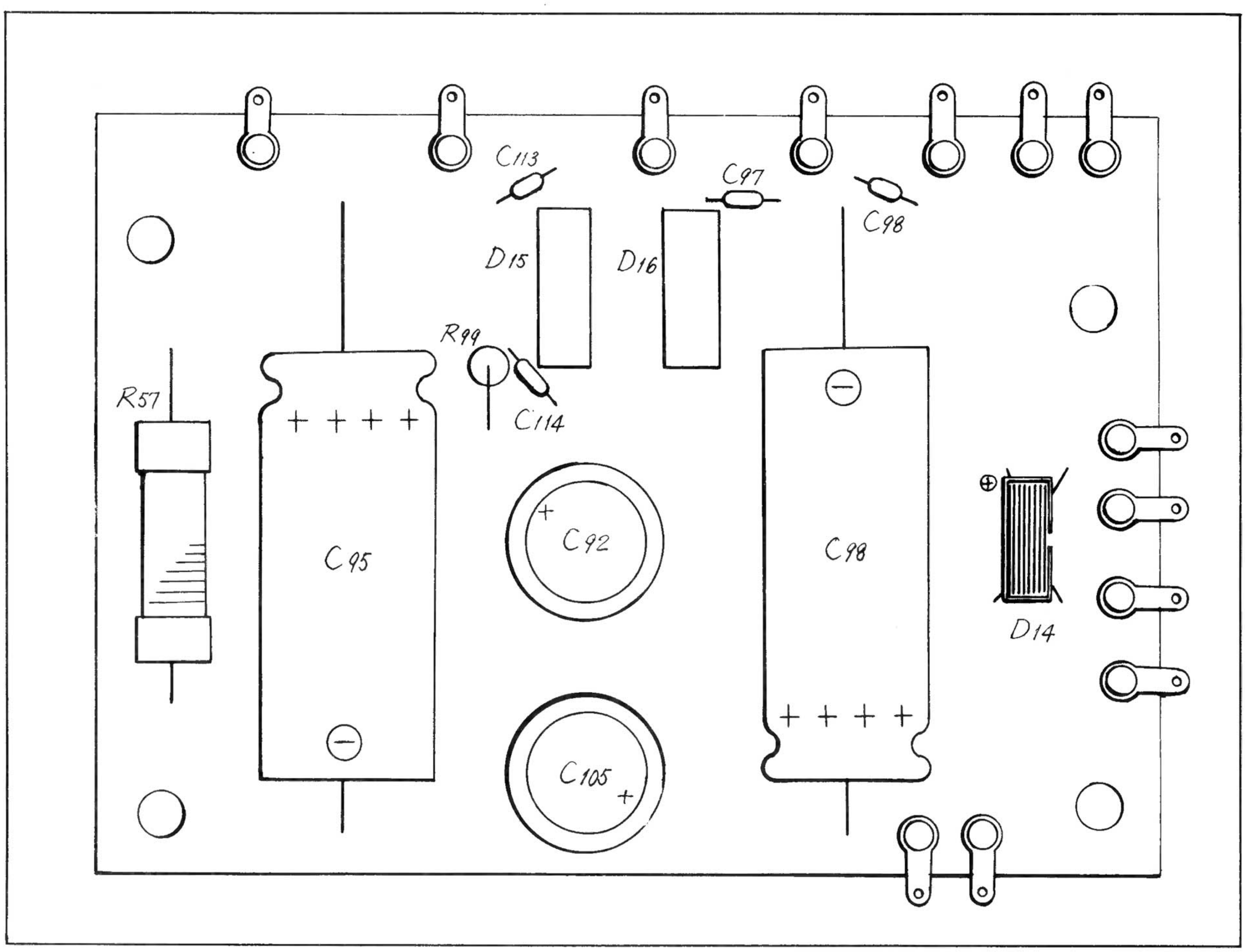

Fig. 22 RECTIFICATION SECTION

www.hifiengine.com

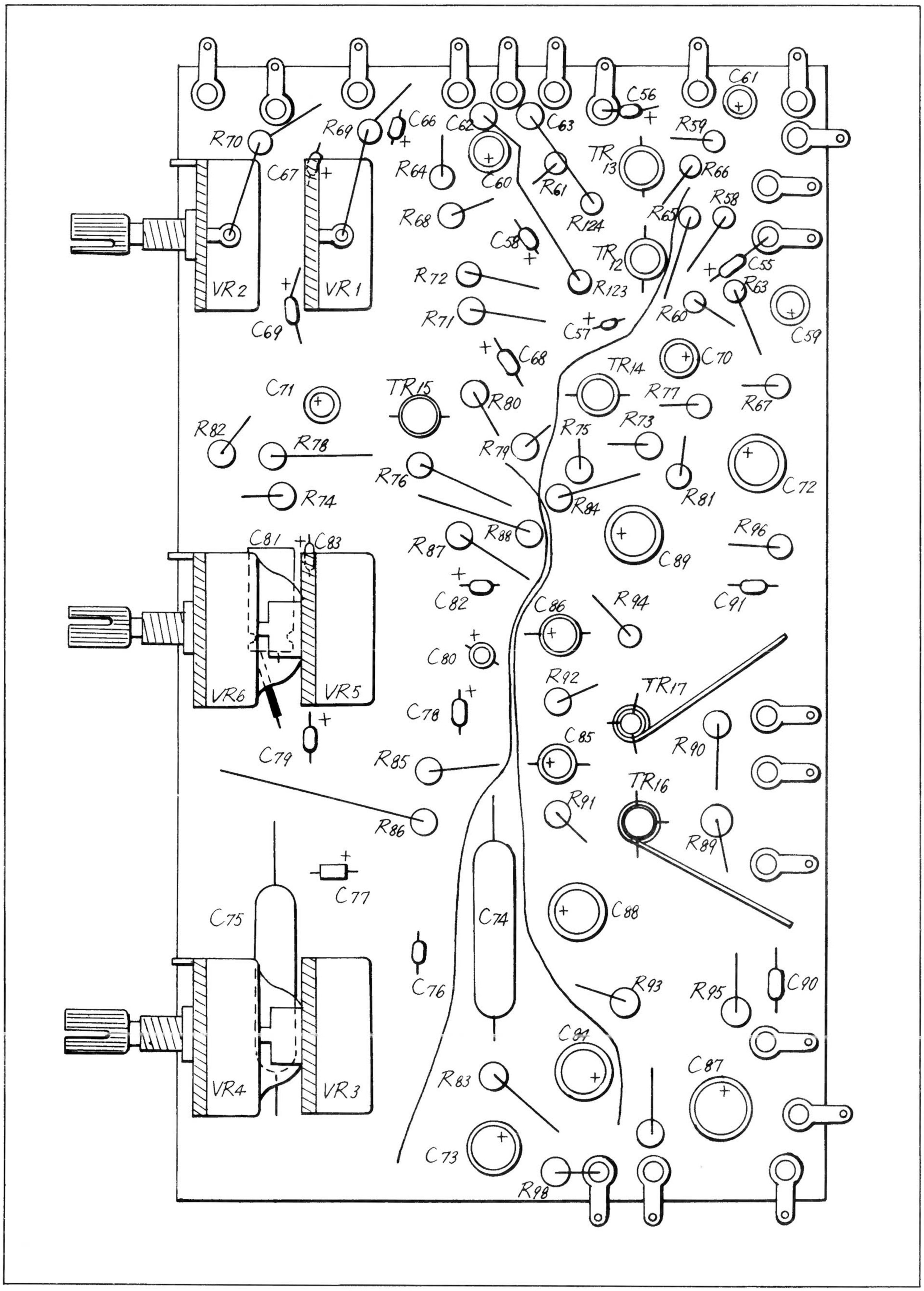

Fig. 23 AUDIO SECTION

www.hifiengine.com

SERVICING THE RECORD CHANGER

SPECFICATIONS

Operating voltage ..... 117 Volts, AC
Turntable speeds ..... 16⅔, 33⅓, 45 and 78 RPM
Record load ..... Five or six 10″, 12″, or 7″ records with any intermix of five or six 12″ and 10″ records of same speed.

LUBRICATION

The Record Changer mechanism is well lubricated before leaving the factory; however, after prolonged use, it is advisable to relubricate certain parts.
A medium grease should be applied to the following points.
Idler Arm Pivot (Ref. No. 128). Operating Plate surfaces. Gear teeth, Bearing and Cam Track.
A light oil should be applied at the following points:
Pickup Arm Hinge Pivots. Pickup Arm Raising Spindle Bearings. Turntable Bearing. Idler Wheel Spindle.
Take care not to get oil on the rubber idler wheel tire or the inside of the Turntable rim.

ADJUSTMENT

Stylus Set-Down: The set-down position of the Stylus on the record is adjusted by means of the Stylus Adjusting Screw (See Fig. 26). The correct position is ⅛″ from the edge of the record.
It is advisable to make this adjustment with a stack of 10″ records on the Turntable.
When correctly positioned for a 10″ record, the 12″ and 7″ stylus set-down will also be correct.
Pickup Arm Height: The Pickup Arm height is adjusted by the Pickup Height Adjusting Screw (See Fig. 26). To raise the height of the Pickup Arm turn this screw counter-clockwise and to lower it, clockwise. The Pickup Arm height should be adjusted so that when a 0.45″ stack of records is on the Turntable, the point of the Stylus clears the top record by ⅛″. A check should then be made to ensure that the Pickup Arm clears the underside of records ledged on the Center Spindle and also clears the top of the Pickup Arm Rest.
Stylus Pressure: Stylus pressure is adjusted by re-positioning the Pickup Balance Spring in the Spring Anchor (See Fig. 26) until the correct pressure is obtained. The Stylus Pressure should be 5 to 6 grams.
Speed Change:

1. Remove Turntable (See Fig. 24)
2. Set the Speed Selector Lever to 45 RPM.
3. Using screwdriver slot provided in Idler Arm Pivot adjust the height of the Idler Wheel until it is just below the second shoulder of the Motor Spindle as shown in Fig. 25. The Idler Arm Pivot (Ref. No. 128) is turned clockwise to lower the Idler Wheel and counter-clockwise to raise it.

DISASSEMBLY INSTRUCTIONS

1. **Center Spindle Assembly**: Lift spindle and twist. To replace the Center Spindle place it into the Turntable Bearing, ensuring that the projection on the Spindle located in the slot at the top, of the Turntable Bearing and press downwards until Spindle snaps onto the Retaining Clip.
2. **Turntable Assembly**: Remove Circlip (Ref. No. 117) and carefully lift Turntable Assembly off its bearing. When replacing Turntable Assembly push the Idler Wheel Assembly (Ref.No.134) in towards the Turntable Center, this will allow the Turntable to drop in position without damaging the Idler Wheel.
3. **Control Arm Assembly**: Before attempting this, make sure that the Unit has completed its cycle and the Pickup Arm returned to rest. Remove the Circlip (Ref. No. 93) spacer and spring from the bottom of the Control Spindle. The Control Arm Assembly can then be removed from the top of the Unit.
4. **Pickup Arm Assembly**: The Unit should be disconnected from the Power supply before attempting to remove the Pickup Arm Assembly. The Pickup Arm leads should be detached from the Terminals on the underside of the Unit, and Pickup Arm Spindle Nut (Ref. No. 3) should be unscrewed, the Pickup Arm may then be lifted clear. The Pickup Arm lead should be with drawn from the hole in the diecasting.
5. **Operating Plate**: The Operating Plate Assembly (Ref. No. 68) should only be removed or replaced with the Unit in the Switched off condition. When Circlips (Ref. No. 73, 77) and have been removed, the Operating Plate Assembly may be detached from the Unit. When replacing, ensure that the cam spindle slot (Ref. No. 74) is located in the Sub Plate.
6. **Sub Plate Assembly and Selector Housing**: This may be detached by removing four retaining screws (Ref. No. 118, 116, 113, 47 and 45) and circlip reject lever.

www.hifiengine.com

REPLACING THE CARTRIDGE AND STYLUS

Cartridge:

1. Lift the Pickup Arm to a position that will make the Cartridge accessible.
2. The leads are removed by gently pulling the connectors off the Cartridge terminals.
3. Gently remove Cartridge by spreading out the Cartridge attaching spring as shown in Fig. 28.
4. To install a new Cartridge, reverse the above procedure.

Stylus:

1. Lift the Pickup Arm to a position that will make the Stylus accessible.
2. Gently remove Stylus and place new Stylus into correct position as shown in Fig. 28.

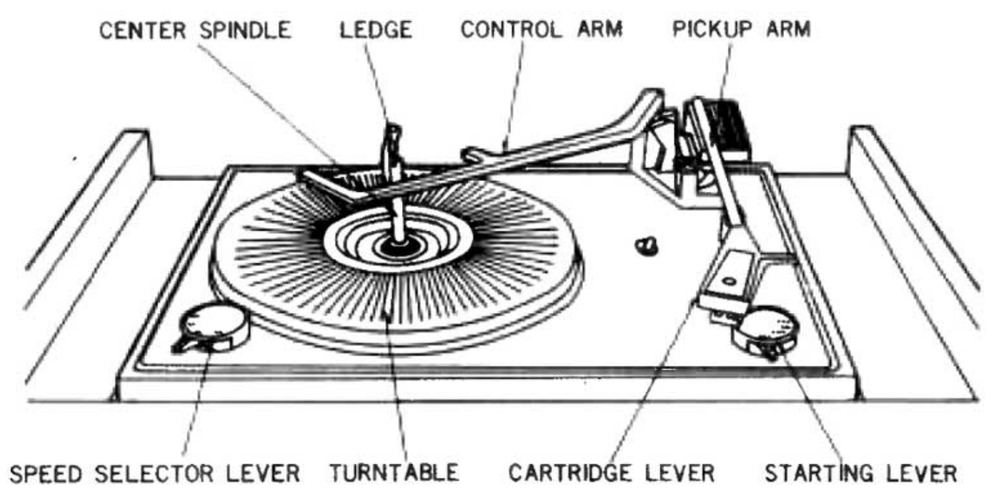

Fig. 24

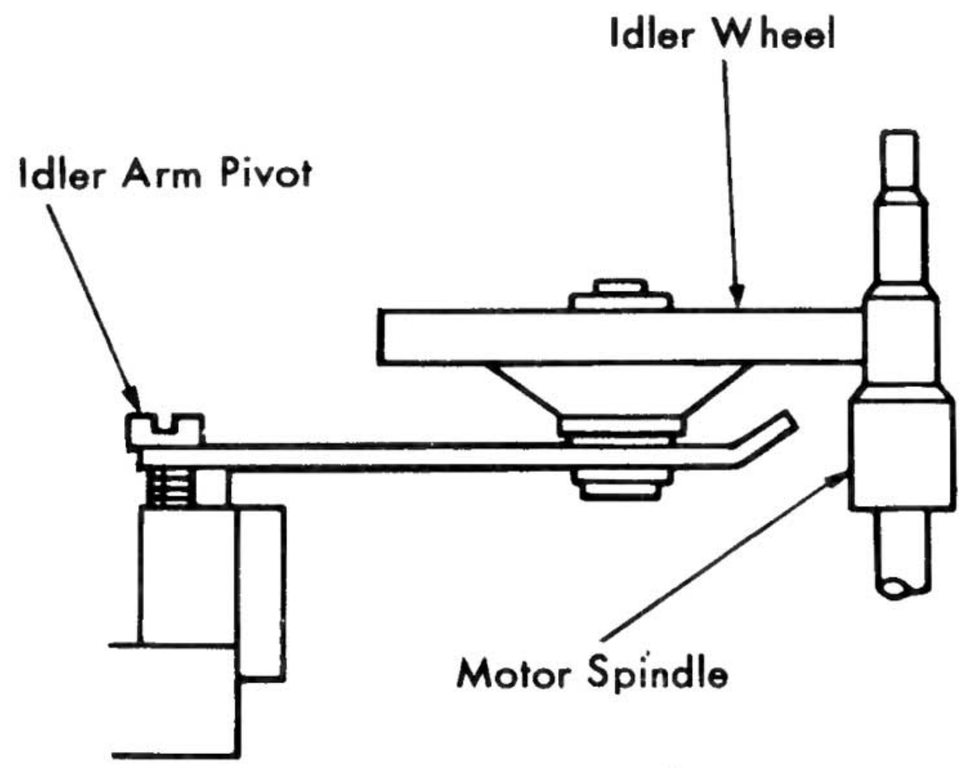

Fig. 25 PICKUP ARM ADJUSTMENT

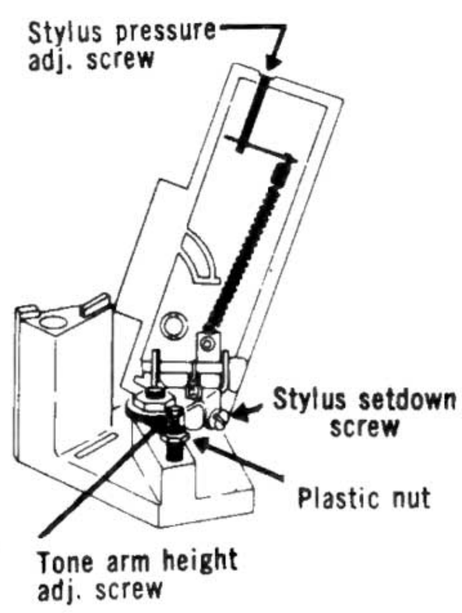

Fig. 26 TOP VIEW

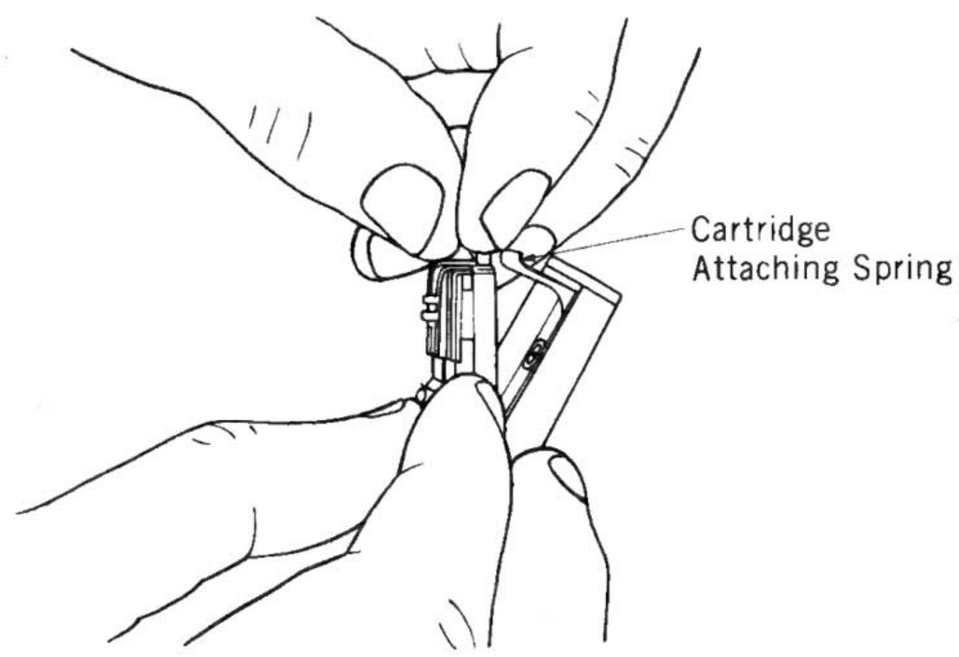

Fig. 27 REPLACING CARTRIDGE

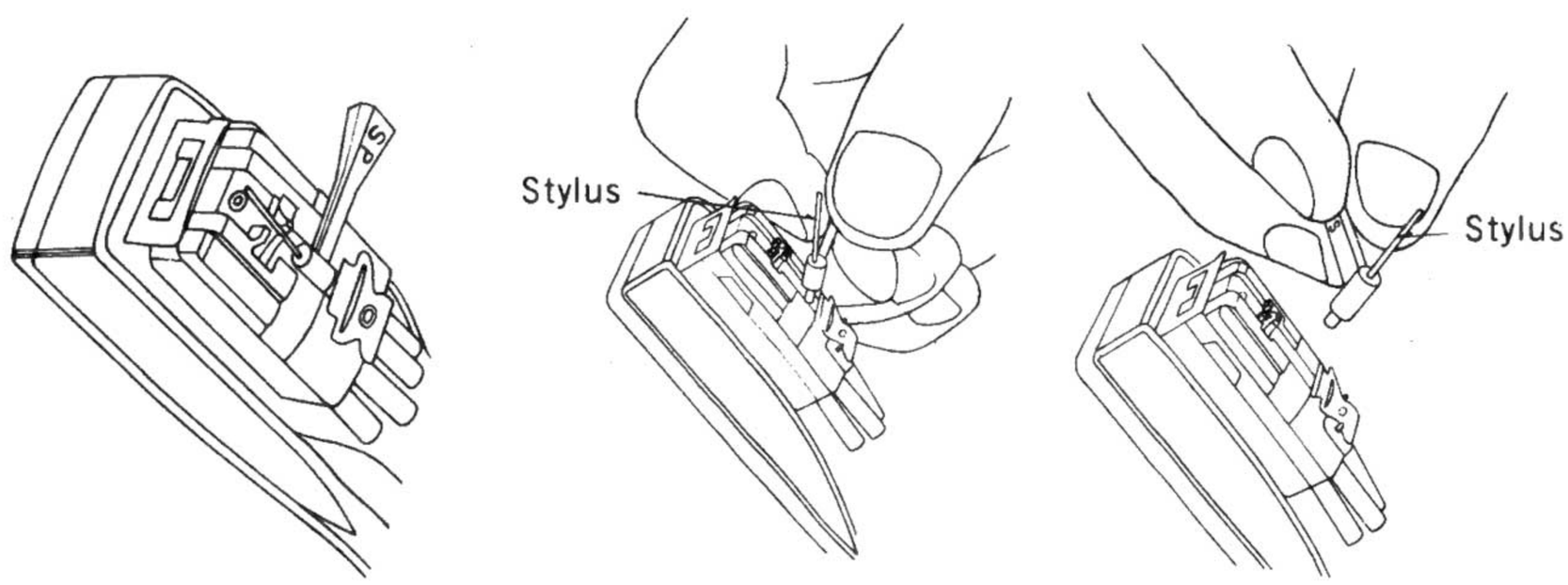

Fig. 28 REPLACING STYLUS

www.hifiengine.com

EXPLODED VIEW OF RECORD CHANGER

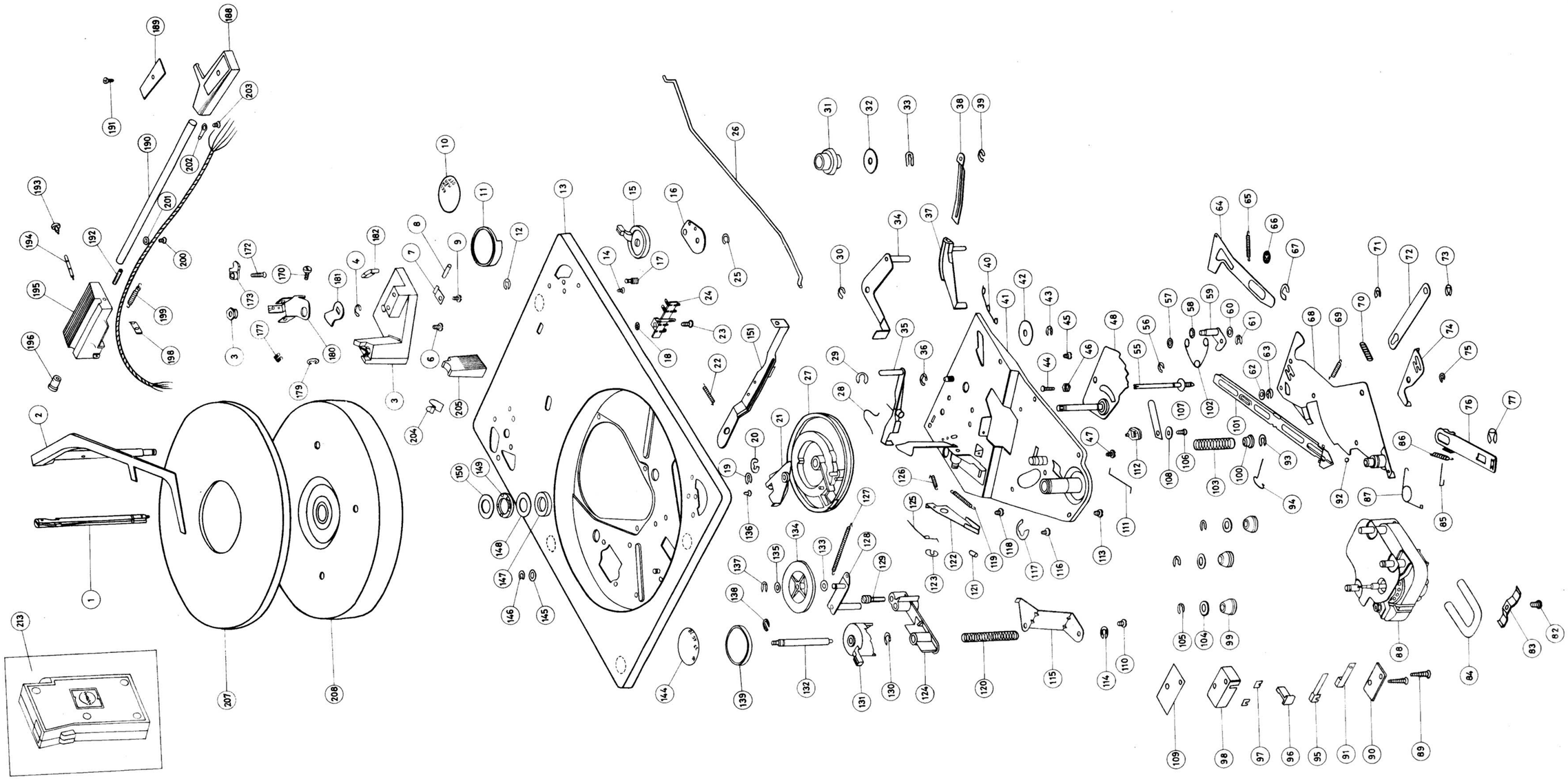

RECORD CHANGER REPLACEMENT PARTS LIST

Ref. No.	Stock No.	Description
A.A.50-5D2PS1757/167		Changer Complete

Item	Part No.	Description
1	A105964	Center Spindle Assembly
2	B106971	Control Arm Assembly
3	A105624	P.U. Spindle Nut
4	A102109	Circlip
5	C105681	Control Housing
6	A106510	Screw Type Z,N° 6×¼″B.H^{D}
7	A104619	Clamp
8	A107504	½″-3M.M.P.V.C. Sleeving
9	A106510	Screw Type Z.N° 6×¼″B.H^{D}
10	A105730	Reject Label
11	A105607	Escutcheon Moulding
12	A102188	Circlip
13	C105977	Mainplate Riveting Assembly
14	A106919	Screw Type 25,4-24×¼″c/sunk
15	A105606	Reject Knob
16	A105978	Reject Plate Assembly
17	A105732	Reject Knob Pivot
18	A106504	6B.A. External Lock Washer
19	A100762	Circlip
20	A102110	Circlip
21	A102132	Actuating Pavil Assembly
22	A105826	Spring (Switch Lever)
23	A105264	Screw Type 25,6-20×½″B.H^{D}
24	A106206	Tag Mounting Strip
25	A102109	Circlip
26	B105828	Switch Link
27	A102133	Cam Gear Riveting Ass'y
28	A106007	Toggle Spring
29	A100762	Circlip
30	A102109	Circlip
31	A105943	Rubber Mounting (4 off)
32	A105931	Washer (4 off)
33	A103558	Circlip (4 off)
34	A105969	Reset Link Assembly
35	A106128	Trip Lever Assembly
36	A102109	Circlip
37	A106067	Reject Lever Assembly
38	A106065	Reject Link
39	A102109	Circlip
40	A106627	Spring (Detent)
41	C107105	Maw Sub-plate Riveting Ass'y
42	A105660	Control Washer
43	A100762	Circlip
44	A105712	Adjusting Screw
45	A106510	Screw Type Z,N° 6×¼″B.H^{D}
46	A105907	Nut
47	A106510	Screw Type Z.N° 6×¼″B.H^{D}
48	B107104	Ouadrant Assembly
55	A105976	P.U. Raising Spindle Ass'y
56	A100785	Circlip
57	A101620	Washer
58	A101620	Washer
59	A107077	Toggle Riveting Assembly
60	A101620	Washer
61	A107298	Circlip
62	A106966	Washer
63	A104077	Circlip
64	B105592	Cut-off Lever
65	A102623	Spring (Cut-off Lever)
66	A102251	Retainer

Item	Pat No.	Description
67	A101526	Circlip
68	B107078	Operating Plate Riveting Ass'y
69	A105825	Spring
70	A107007	Spring (Toggle or Lever)
71	A102109	Circlip
72	A106066	Strap
73	A102109	Circlip
74	A107009	Toggle Operating Lever
76	B105597	Feed lever Link
77	A1021·10	Circlip
82	A105263	Screw Type 25,6-20×⅜″B,H^{D}
83	A102718	Cable Clamp
84	A106513	3″-5M.M. P.V.C. Sleeving
85	A106968	Spring (Feed Lever Link)
86	A105827	Spring (Link Return)
87	A106980	Spring (Operating Plate)
88		T.P.8. Motor Ass'y (See List Below)
89	A106512	Screw Type 25,4-24×⅝″B.H^{D} (2 off)
90	A200447	Switch Cover
91	A200444	Contact (Domed)
92	A107419	9/64″Dia Ball Bearing
93	A102109	Circlip
94	A105901	Spring (Actuating Slide)
95	A200445	Contact (Flat)
96	A200450	Switch Dolly
97	A200446	Solder Tag (2 off)
98	B200449	Switch Body
99	A102181	Rubber Moutning (3 off)
100	A104861	Spacer
101	B106962	Actuating Slide
102	A107109	Spring (Toggle Friction)
103	A105985	Spring (Control Spindle)
104	A101646	Washer (3 off)
105	A100762	Circlip (3 off)
106	A106511	Screw Type 25,4-24×½″B.H^{D}
107	A104384	Lear Spring
108	A102237	Washer
109	A106015	Retrining Strip
110	A106510	Screw Type Z, N° 6×¼″B. H^{D}
111	A104882	Retaining Clip
112	A105609	Spring Support
113	A106510	Screw Type Z,N° 6×¼″B.H^{D}
114	A102128	Circlip
115	A105584	Speed Change Bracket
116	A106510	Screw Type Z,N° 6×¼″B.H^{D}
117	A105678	Circlip
118	A106510	Screw Type Z,N° 6×¼″B,H^{D}
119	A200510	Spring
120	A105831	Spring (Raising Spindle)
121	A105677	Damping Sleeve
122	A106963	Stop Latch
123	A100762	Circlip
124	A107503	Speed Change Arm Assembly
125	A106969	Spring (Stop Latch)
126	A105849	Spring (Selector Lever Latch)
127	A105824	Spring (Jockey Pulley)
128	A105965	Jockey Arm Riveting Assembly
129	A105619	Adjusting Screw
130	A102109	Circlip
131	B105604	Raising Cam
132	A105733	Raising Spindle
133	A101620	Wasner
134	A101623	Jockey Pulley Assembly
135	A101620	Washer
136	A106919	Screw Type 25,4-24×¼″c/sunk

www.hifiengine.com

RECORD CHANGER REPLACEMENT PARTS LIST (Continued)

Item	Part No.	Description
137	A100762	Circlip
138	A102128	Circlip
139	A105607	Escutcheon Moulding
144	A105731	Speed Change Label
145	A102595	Washer
146	A102109	Circlip
147	A102058	Damping Rubber
148	A101506	Thrust Washer
149	A101649	Ballrace
150	A101506	Thrust Washer
151	A105585	Switch Lever
188	B106977	Pick-up Head
189	A107455	Pick-up Trim
190	B106975	Pick-up Tube
191	A106573	Screw 6BA/×3/16″ C/sunk php. rec
192	A106711	Balance Adujusting Screw
193	A106652	Screw (P.U. Pivot)
194	A106651	Pivot Pin
195	C106978	Pick-up Arm Body
196	A106974	Tube End
197	A106745	23″ Quin Pick-up Lead
198	A106657	Balance Adjusting Plate
199	A105669	Spring. (P,U, Balance)
200	A107509	Screw Type 125-4-24×5/16″ Pan hd phps rec
201	A106504	6B.A. External Lockwasher
202	A103587	Soldertag
203	A105266	Screw Type 125-4-24×4/1 Pan hd phps rec
204	A107185	Pick-up Arm Clip Ass'y
205	B106976	Pick-up Rest
164	A104306	Sleeve (4 off)
165	A102720	Tag (4 off)
170	A106917	Screw Type 6BA 3/8″ CH Hd
172	A107508	Screw Type 25-4-24×7/16″ HD B
173	A106080	Restrictor
177	A105853	Spring (Hing Retainer)
179	A106205	Circlip
180	A105975	Hinge Bracket Riveting Ass'y
181	A105598	Pick-up Adjuster
182	A106047	Locking Sleeve
213		A.A. 50 45 rpm Adaptor
	EPC-35TTAD	Cartridge (W/stylus)
	EPS-13TTSD	Stylus (Diamond)

SPEAKER SYSTEM (SYK-270)

Ref. No.	Stock No.	Description
*	SYK-270	SPEAKER SYSTEM COMPLETE
		SPEAKER
SP_1 SP_3	EAS-8P40S	7″ PM Dynamic Speaker, 16Ω
SP_2 SP_4	EAS-65PH34SA	2½″ PM Dynamic Speaker, 16Ω
		RESISTORS
R_{117}	ERD-1PZK100	10Ω 1Watt, ±10% Carbon
R_{118}	ERD-1PZK100	10Ω 1Watt, ±10% Carbon
		CAPACITORS
C_{101}	ECE-B50Y1R5	1.5μF 50WV Electrolytic
C_{102}	ECE-B50Y1R5	1.5μF 50WV Electrolytic
		APPEARANCE AND MISCELLANEOUS
	SWJ-10	Plug
	SKM-1780	Speaker Box Only
	SKE-146	Baffie Board Complete
	SKF-980	Rear Panel Only
	+MM2.7-13	Screw Rear Panel Mt'g.

REPLACEMENT PARTS LIST (TUNER)

Ref. No.	Stock No.	Description
		COMPONENT COMBINATION
M_1	EXA-F203Z471	0.01μF, 0.01μF & 470Ω
M_2	EXA-A5DG03	390pF x3 & 4.7KΩ x2
M_3~M_4	EXA-6FC04	22KΩ x2, 150pFx2, 300pF & 10KΩ Old part No. EXA-6FB04
		SWITCHES
S_1~S_6	ESR-365L30AE	Band Selector Switch
S_7	EVQ-BOGL30	AFC Switch
S_8	EST-1030DU	Power Switch Ass'y
		VARIABLE RESISTOR
VR_1 VR_2	EVG-71AL35B54-A	50KΩ (B), Loudness Control
VR_3 VR_4	EVF-72AL35B54-C	50KΩ (B), Treble Control
VR_5 VR_6	EVF-71AL35B54-C	50KΩ (B), Bass Control
VR_7	EVC-B2AL35G15	100KΩ (G), Balance Control
		COILS AND TRANSFORMERS
L_1	SLA-4P2	FM Antenna Coil
L_2	SLD-4Y2	FM Collector Coil
L_3	SLQ-Y11G-2	IF Trap Coil
L_4	SLO-4Y2	FM Oscillator Coil
L_5	SLF-2E6	AM Antenna Coil
L_6	SLO-2C4-M	AM Oscillator Coil
L_7~L_8	SLQ-V394-2Y	Band Pass Filter
L_9~L_{10}	SLQ-Y35G-2D	RFC
T_1	SLI-4D12-M	FM 1st IF Transformer
T_2	SLI-4C22-M	FM 2nd IF Transformer
T_3	SLI-4C32-M	FM 3rd IF Transformer
T_4	SLI-4D54-M	FM Disc. IF Transformer
T_5	SLI-2C12-M	AM 1st IF Transformer
T_6	SLI-2C22-M	AM 2nd IF Transformer
T_7	SLI-2C42-M	AM 3rd IF Transformer
T_8	SLM-2E2-M	19KC Pick Up Coil
T_9	SLM-2E4-M	19KC Doubler Coil
T_{10}	SLM-3E2-M	L-R Detector Coil
T_{11}~T_{12}	SLT-3H2-D	Input Transformer
T_{13}	SLT-5L6-D	Power Transformer

www.hifiengine.com

REPLACEMENT PARTS LIST

Ref. No.	Stock No.	Description
		TRANSISTORS AND DIODES
TR_1	MK-10	FM RF Amplifier (FET)
TR_2	2SC185	FM Mixer
TR_3	2SC469	FM Oscillator
TR_4	2SC184	FM 1st IF Amp. & AM Converter
TR_5	2SC469	FM 2nd IF Amp. & AM 1st IF Amp.
TR_6	2SC469	FM 3rd IF Amp. & AM 2nd IF Amp.
TR_7	2SA101	Distributer
TR_8	2SB175	19KC Amplifier
TR_9	2SB175	38KC Amplifier
TR_{10}	2SC183	DC Amplifier
TR_{11}	2SB178	DC Switching
TR_{12}	2SB117	Squelch & 1st AF Amplifier (Left)
TR_{13}	2SB117	Squelch & 1st AF Amplifier (Right)
TR_{14}	2SB117	2nd AF Amplifier (Left)
TR_{15}	2SB117	2nd AF Amplifier (Right)
TR_{16}	2SB117	3rd AF Amplifier (Left)
TR_{17}	2SB117	3rd AF Amplifier (Right)
$TR_{18,19}$	2SB473	Output (push-pull) (Left)
$TR_{20,21}$	2SB473	Output (push-pull) (Right)
D_1	SC-15	FM AFC
D_2	OA70	FM, AM D. AGC
D_3D_4	20A70	FM Detector
D_5	OA70	AM Detector & AGC
D_6	1S1211	Operation Compensator
D_7	1S1211	Operation Compensator
D_8D_9	20A70	Doubler
$D_{10}D_{12}$	20A70	L-R Detector
$D_{11}D_{13}$	20A70	L-R Detector
		THEMISTORS
Th_1	ERT-D2BGK750S	Temperature Compensator
Th_2	ERT-D2BGK750S	Temperature Compensator
Th_3	ERT-D2BGK750S	Temperature Compensator
Th_4	ERT-D2BGK750S	Temperature Compensator
		RECTIFIERS
D_{14}	KC1.3G22-1A	Rectifier, Selenium
D_{15}	1S1850	Rectifier
D_{16}	1S1850R	Rectifier
		CAPACITORS
C_1	UKD-06J102M	0.001μF ±20% Ceramic
C_2	USD-04J050D	5pF ±0.5pF Ceramic
C_3	UKD-06J102M	0.001μF ±20% Ceramic
C_5	USD-04J040C	4pF ±0.25pF Ceramic
C_6	ECQ-S02181KZ	180pF ±10% Styrol
C_7	TLD-08J223Z	0.022μF +80%, −20% Ceramic
C_8	TLD-08J223Z	0.022μF +80%, −20% Ceramic
C_9	TLD-07J103Z	0.01μF +80%, −20% Ceramic
C_{10}	USD-04J010C	1pF ±0.25pF Ceramic
C_{11}	USD04J150K	15pF ±10% Ceramic
C_{12}	USD04J070D	7pF ±0.5pF Ceramic
C_{13}	UKD-06J102M	0.001μF ±20% Ceramic
C_{14}	USD04J050D	5pF ±0.5pF Ceramic
C_{16}	USD04J050D	5pF ±0.5pF Ceramic
C_{17}	USD04J150K	15pF ±10% Ceramic
C_{18}	ECQ-S02361JZE	365pF ±5% Styrol
C_{20}	UKD-10J103M	0.01μF ±20% Ceramic
C_{21}	TLD-08J223Z	0.022μF +80%, −20% Ceramic
C_{22}	TLD-08J223Z	0.022μF +80%, −20% Ceramic
C_{23}	USD04J010C	1pF ±0.25pF Ceramic
C_{24}	UKD-12J223M	0.022μF ±20% Ceramic
C_{25}	ECE-A6V33	33μF 6.3WV Electrolytic
C_{26}	TLD-08J223Z	0.022μF +80%, −20% Ceramic
C_{27}	USD04J020C	2pF ±0.25pF Ceramic
C_{28}	TLD-08J223Z	0.022μF +80%, −20% Ceramic
C_{29}	TLD-08J223Z	0.022μF +80%, −20% Ceramic
C_{30}	ECQ-S02681KZ	680pF ±10% Styrol
C_{31}	ECE-B16V4R7	4.7μF 16WV Electrolytic
C_{32}	ECE-A16V3R3	3.3μF 16WV Electrolytic
C_{33}	ECE-A6V220	220μF 6.3WV Electrolytic
C_{34}	ECE-A10V100	100μF 10WV Electrolytic
C_{35}	ECE-A10V100	100μF 10WV Electrolytic
C_{36}	ECQ-S02121JZ	120pF ±5% Styrol
C_{37}	MFL05-103K	0.01μF ±10% Mylar
C_{38}	ECE-A6V10	10μF 6.3V Electrolytic
C_{39}	ECQ-S02182KZ	1800pF ±10% Styrol
C_{40}	ECQ-S02102KZ	1000pF ±10% Styrol
C_{41}	ECQ-S02472KZ	4700pF ±10% Styrol
C_{42}	UKD-12J223M	0.022μF ±20% Ceramic
C_{43}	AL-10V1M	1μF ±20% Electrolytic
C_{44}	ECQ-S02472KZ	4700pF ±10% Styrol
C_{45}	UKD-06J102M	0.001μF ±20% Ceramic
C_{46}	UKD-10J103M	0.01μF ±20% Ceramic
C_{47}	ECQ-S02222KZ	2200pF ±10% Styrol
C_{48}	ECQ-S02102KZ	1000pF ±10% Styrol
C_{49}	ECQ-S02102KZ	1000pF ±10% Styrol
C_{50}	AL-15VIM	1μF ±20% Electrolytic
C_{51}	ECE-A16V10	10μF 16V Electrolytic
C_{52}	ECE-A16V100	100μF 16V Electrolytic
C_{53}	ECE-A10V220	220μF 10V Electrolytic
C_{54}	ECE-A10V100	100μF 10V Electrolytic
C_{55}	AL-10V0.22M	0.22μF ±20% Electrolytic
C_{56}	AL-10V0.22M	0.22μF ±20% Electrolytic
C_{57}	AL-10VIM	1μF ±20% Electrolytic
C_{58}	AL-10VIM	1μF ±20% Electrolytic
C_{59}	ECE-A6V33	33μF 6.3V Electrolytic
C_{60}	ECE-A6V33	33μF 6.3V Electrolytic
C_{61}	ECE-A16VR3	3.3μF 16V Electrolytic
C_{62}	ECQ-M1563MX	0.056μF ±20% Electrolytic
C_{63}	ECQ-M1563MX	0.056μF ±20% Electrolytic
C_{66}	AL-10V0.1M	0.1μF ±20% Electrolytic
C_{67}	AL-10V0.1M	0.1μF ±20% Electrolytic
C_{68}	AL-10V0.1M	0.22μF ±20% Electrolytic
C_{69}	AL-10V0.22M	0.22μF ±20% Electrolytic

www.hifiengine.com

REPLACEMENT PARTS LIST

Ref. No.	Stock No.	Description			
C_{70}	ECE-A6V47	47μF	6.3V		Electrolytic
C_{71}	ECE-A6V47	47μF	6.3V		Electrolytic
C_{72}	ECE-A10V470	470μF	10V		Electrolytic
C_{73}	ECE-A10V220	220μF	10V		Electrolytic
C_{74}	ECQ-M1683MX	0.068μF	±20%		Electrolytic
C_{75}	ECQ-M1683MX	0.068μF	±20%		Electrolytic
C_{76}	AL-10V0.22M	0.22μF	±20%		Electrolytic
C_{77}	AL-10V0.22M	0.22μF	±20%		Electrolytic
C_{78}	AL-10V0.15M	0.15μF	±20%		Electrolytic
C_{79}	AL-10V0.15M	0.15μF	±20%		Electrolytic
C_{80}	ECE-A6V10	10μF	6.3V		Electrolytic
C_{81}	ECE-A6V10	10μF	6.3V		Electrolytic
C_{82}	AL-10V0.68M	0.68μF	±20%		Electrolytic
C_{83}	AL-10V0.68M	0.68μF	±20%		Electrolytic
C_{84}	ECE-A10V220	220μF	10V		Electrolytic
C_{85}	ECE-A6V33	33μF	6.3V		Electrolytic
C_{86}	ECE-A6V33	33μF	6.3V		Electrolytic
C_{87}	ECE-A10V220	220μF	10V		Electrolytic
C_{88}	ECE-A6V220	220μF	6.3V		Electrolytic
C_{89}	ECE-A6V220	220μF	6.3V		Electrolytic
C_{90}	USD08J101K	100pF	±10%		Ceramic
C_{91}	USD08J101K	100pF	±10%		Ceramic
C_{92}	ECE-A16V470	470μF	16V		Electrolytic
C_{93}	UKD-10J103M	0.01μF	±20%		Ceramic
C_{94}	UKD-10J103M	0.01μF	±20%		Ceramic
C_{95}	ECE-B16V2200	2200μF	16V		Electrolytic
C_{96}	ECE-B16V2200	2200μF	16V		Electrolytic
C_{97}	TLD-08J223Z	0.022μF	+80%,−20%		Ceramic
C_{98}	TLD-08J223Z	0.022μF	+80%,−20%		Ceramic
C_{99}	USD04J100F	10pF	±1pF		Ceramic
C_{100}	USD04J100F	10pF	±1pF		Ceramic
C_{103}	UKD-08J472M	0.0047μF	±20%		Ceramic
C_{104}	TLD-08J223Z	0.022μF	+80%,−20%		Ceramic
C_{105}	ECE-A16V470	470μF	16V		Electrolytic
C_{106}	BP-21	100pF			Ceramic
C_{110}	USD04J100F	10pF	±1pF		Ceramic
C_{111}	TLD-07J103Z	0.01μF	+80%,−20%		Ceramic
C_{112}	ECE-B16V220	220μF	16V		Electrolytic
C_{113}	TLD-08J223Z	0.022μF	+80%,−20%		Ceramic
C_{114}	TLD-08J223Z	0.022μF	+80%,−20%		Ceramic
C_{115}	UKD-06J102M	0.001μF	±20%		Ceramic
C_{116}	UKD-06J102M	0.001μF	±20%		Ceramic
$CV_1 CV_6$	ECV-5YR33X20	Tuning Gang, W/Trimmer ($CT_1 \sim CT_6$)			

RESISTORS

Ref. No.	Stock No.	Description			
R_1	ERD-14VK224	220KΩ	¼Watt	±10%	Carbon
R_2	ERD-14VK471	470Ω	¼Watt	±10%	Carbon
R_3	ERD-14VK101	100Ω	¼Watt	±10%	Carbon
R_4	ERD-14VK332	3.3KΩ	¼Watt	±10%	Carbon
R_5	ERD-14VK471	470Ω	¼Watt	±10%	Carbon
R_6	ERD-14VK221	220Ω	¼Watt	±10%	Carbon
R_7	ERD-14VK221	220Ω	¼Watt	±10%	Carbon
R_8	ERD-14VK272	2.7KΩ	¼Watt	±10%	Carbon
R_9	ERD-14VK183	18KΩ	¼Watt	±10%	Carbon
R_{10}	ERD-14VK392	3.9KΩ	¼Watt	±10%	Carbon
R_{11}	ERD-14VK104	100KΩ	¼Watt	±10%	Carbon
R_{12}	ERD-14VK224	220KΩ	¼Watt	±10%	Carbon
R_{13}	ERD-14VK332	3.3KΩ	¼Watt	±10%	Carbon
R_{14}	ERD-14VK821	820Ω	¼Watt	±10%	Carbon
R_{15}	ERD-14VK221	220Ω	¼Watt	±10%	Carbon
R_{17}	ERD-14VK681	680Ω	¼Watt	±10%	Carbon
R_{18}	ERD-14VK221	220Ω	¼Watt	±10%	Carbon
R_{19}	ERD-14VK151	150Ω	¼Watt	±10%	Carbon
R_{20}	ERD-14VK331	330Ω	¼Watt	±10%	Carbon
R_{21}	ERD-14VK474	470KΩ	¼Watt	±10%	Carbon
R_{22}	ERD-14VK221	220Ω	¼Watt	±10%	Carbon
R_{23}	ERD-14VK101	100Ω	¼Watt	±10%	Carbon
R_{24}	ERD-14VK102	1KΩ	¼Watt	±10%	Carbon
R_{25}	ERD-14VK102	1KΩ	¼Watt	±10%	Carbon
R_{26}	ERD-14VK472	4.7KΩ	¼Watt	±10%	Carbon
R_{27}	ERD-14VK683	68KΩ	¼Watt	±10%	Carbon
R_{28}	ERD-14TK472	4.7KΩ	¼Watt	±10%	Carbon
R_{29}	ERD-14VK104	100KΩ	¼Watt	±10%	Carbon
R_{30}	ERD-14VK222	2.2KΩ	¼Watt	±10%	Carbon
R_{31}	ERD-14VK331	330Ω	¼Watt	±10%	Carbon
R_{32}	ERD-14VK471	470Ω	¼Watt	±10%	Carbon
R_{33}	ERD-14TK122	1.2KΩ	¼Watt	±10%	Carbon
R_{34}	ERD-14VK472	4.7KΩ	¼Watt	±10%	Carbon
R_{35}	ERD-14VK333	33KΩ	¼Watt	±10%	Carbon
R_{36}	ERD-14VK102	1KΩ	¼Watt	±10%	Carbon
R_{37}	ERD-14VK222	2.2KΩ	¼Watt	±10%	Carbon
R_{38}	ERD-14VK472	4.7KΩ	¼Watt	±10%	Carbon
R_{39}	ERD-14VK333	33KΩ	¼Watt	±10%	Carbon
R_{40}	ERD-14VK681	680Ω	¼Watt	±10%	Carbon
R_{42}	ERD-14VK153	15KΩ	¼Watt	±10%	Carbon
R_{43}	ERD-14VK472	4.7KΩ	¼Watt	±10%	Carbon
R_{44}	ERD-14VK681	680Ω	¼Watt	±10%	Carbon
R_{45}	ERD-14VK333	33KΩ	¼Watt	±10%	Carbon
R_{46}	ERD-14VK103	10KΩ	¼Watt	±10%	Carbon
R_{47}	ERD-14VK103	10KΩ	¼Watt	±10%	Carbon
R_{48}	ERD-14VK103	10KΩ	¼Watt	±10%	Carbon
R_{49}	ERD-14VK103	10KΩ	¼Watt	±10%	Carbon
R_{50}	ERD-14VK103	10KΩ	¼Watt	±10%	Carbon
R_{51}	ERD-14VK820	82Ω	¼Watt	±10%	Carbon
R_{53}	ERD-14VK102	1KΩ	¼Watt	±10%	Carbon
R_{54}	ERC-12GK681	680Ω	½Watt	±10%	Solid
R_{56}	ERD-14VK182	1.8KΩ	¼Watt	±10%	Carbon
R_{57}	ERD-1PZK680	68Ω	1 Watt	±10%	Carbon
R_{58}	ERD-14VK154	150KΩ	¼Watt	±10%	Carbon
R_{59}	ERD-14VK154	150KΩ	¼Watt	±10%	Carbon
R_{60}	ERD-14VK333	33KΩ	¼Watt	±10%	Carbon
R_{61}	ERD-14VK333	33KΩ	¼Watt	±10%	Carbon
R_{62}	ERD-14VK473	47KΩ	¼Watt	±10%	Carbon
R_{63}	ERD-14VK102	1KΩ	¼Watt	±10%	Carbon
R_{64}	ERD-14VK102	1KΩ	¼Watt	±10%	Carbon
R_{65}	ERD-14VK822	8.2KΩ	¼Watt	±10%	Carbon
R_{66}	ERD-14VK822	8.2KΩ	¼Watt	±10%	Carbon
R_{67}	ERD-14VK471	470Ω	¼Watt	±10%	Carbon
R_{68}	ERD-14VK471	470Ω	¼Watt	±10%	Carbon
R_{69}	ERD-14TK472	4.7KΩ	¼Watt	±10%	Carbon
R_{70}	ERD-14TK472	4.7KΩ	¼Watt	±10%	Carbon
R_{71}	ERD-14VK562	5.6KΩ	¼Watt	±10%	Carbon
R_{72}	ERD-14VK562	5.6KΩ	¼Watt	±10%	Carbon
R_{73}	ERD-14VK153	15KΩ	¼Watt	±10%	Carbon
R_{74}	ERD-14VK153	15KΩ	¼Watt	±10%	Carbon
R_{75}	ERD-14VK563	56KΩ	¼Watt	±10%	Carbon
R_{76}	ERD-14VK563	56KΩ	¼Watt	±10%	Carbon
R_{77}	ERD-14VK102	1KΩ	¼Watt	±10%	Carbon
R_{78}	ERD-14VK102	1KΩ	¼Watt	±10%	Carbon
R_{79}	ERD-14VK682	6.8KΩ	¼Watt	±10%	Carbon
R_{80}	ERD-14VK682	6.8KΩ	¼Watt	±10%	Carbon
R_{81}	ERD-14VK101	100Ω	¼Watt	±10%	Carbon
R_{82}	ERD-14VK101	100Ω	¼Watt	±10%	Carbon
R_{83}	ERD-14VK102	1KΩ	¼Watt	±10%	Carbon
R_{84}	ERD-14VK102	1KΩ	¼Watt	±10%	Carbon
R_{85}	ERD-14VK122	1.2KΩ	¼Watt	±10%	Carbon
R_{86}	ERD-14TK122	1.2KΩ	¼Watt	±10%	Carbon
R_{87}	ERD-14VK391	390Ω	¼Watt	±10%	Carbon

www.hifiengine.com

REPLACEMENT PARTS LIST

Ref. No.	Stock No.	Description			
R_{88}	ERD-14VK391	390Ω	¼ Watt	±10%	Carbon
R_{89}	ERD-14VK103	10KΩ	¼ Watt	±10%	Carbon
R_{90}	ERD-14VK103	10KΩ	¼ Watt	±10%	Carbon
R_{91}	ERD-14VK332	3.3KΩ	¼ Watt	±10%	Carbon
R_{92}	ERD-14VK332	3.3KΩ	¼ Watt	±10%	Carbon
R_{93}	ERD-14VK390	390Ω	¼ Watt	±10%	Carbon
R_{94}	ERD-14VK390	390Ω	¼ Watt	±10%	Carbon
R_{95}	ERD-14VK104	100KΩ	¼ Watt	±10%	Carbon
R_{96}	ERD-14VK104	100KΩ	¼ Watt	±10%	Carbon
R_{97}	ERD-14VK101	100Ω	¼ Watt	±10%	Carbon
R_{98}	ERD-14VK561	560Ω	¼ Watt	±10%	Carbon
R_{99}	ERD-14VK101	100Ω	¼ Watt	±10%	Carbon
R_{100}	ERD-14TK122	1.2KΩ	¼ Watt	±10%	Carbon
R_{101}	ERD-14TK122	1.2KΩ	¼ Watt	±10%	Carbon
R_{102}	ERD-14TK122	1.2KΩ	¼ Watt	±10%	Carbon
R_{103}	ERD-14TK122	1.2KΩ	¼ Watt	±10%	Carbon
R_{104}	ERD-14TK270	27Ω	¼ Watt	±10%	Carbon
R_{105}	ERD-14TK270	27Ω	¼ Watt	±10%	Carbon
R_{106}	ERD-14TK270	27Ω	¼ Watt	±10%	Carbon
R_{107}	ERD-14TK270	27Ω	¼ Watt	±10%	Carbon
R_{108}	ERW-12L1R5	1.5Ω	½ Watt	±10%	Wire
R_{109}	ERW-12L1R5	1.5Ω	½ Watt	±10%	Wire
R_{110}	ERW-12L1R5	1.5Ω	½ Watt	±10%	Wire
R_{111}	ERW-12L1R5	1.5Ω	½ Watt	±10%	Wire
R_{112}	ERC-12GK155	1.5MΩ	½ Watt	±10%	Solid
R_{113}	ERC-12GK155	1.5MΩ	½ Watt	±10%	Solid
R_{114}	ERD-14VK563	56KΩ	¼ Watt	±10%	Carbon
R_{115}	ERC-12GM105	1MΩ	½ Watt	±20%	Solid
R_{119}	ERD-14TK104	100KΩ	¼ Watt	±10%	Carbon
R_{120}	ERD-14TK104	100KΩ	¼ Watt	±10%	Carbon
R_{121}	ERD-14TK472	4.7KΩ	¼ Watt	±10%	Carbon
R_{122}	ERD-14TK472	4.7KΩ	¼ Watt	±10%	Carbon
R_{123}	ERD-14TK103	10KΩ	¼ Watt	±10%	Carbon
R_{124}	ERD-14TK103	10KΩ	¼ Watt	±10%	Carbon
R_{125}	ERD-14VK560	56Ω	¼ Watt	±10%	Carbon
R_{126}	ERD-14TK181	180Ω	¼ Watt	±10%	Carbon

Stock No.	Description
MISCELLANEOUS (TUNER)	
SVL-205	Dial Light 12.6V 0.3A
RVL-212-2	Stereo Indicator 7.5V 0.075A
SJA-10	AC Cord Power Source
SJF-105	Socket, Dial Light
SSE-10	Jack Ext Speaker AUX, REC OUT & Antenna
SJE-52	Lug, FM Antenna
RJR-602	Tielug & Tielug
RJR-204	Holder L-Type
SGW-1220	Escutcheon
SGK-168	Indicator Plate
SKD-1620	Scale, Dial
SKE-164	Panel, Dial
SKD-1880	Panel, Indicator
SGL-18	Panel, Light
SGL-20	Cover, Panel Light
SGB-274	Badge-A
SHS-918	Cover, Sheet-A
SHS-920	Cover, Sheet-B
SHS-922	Cover, Sheet-C
SHS-924	Cover, Sheet-
SGF-160	Changer Board
SHS-338	Cushion
SBL-9018	Plate Pivot
SBN-262	Tuning Knob (Old Parts No. SBN-228)
SBN-230	Knob (Loudness Bass Treble & Balance)
SBN-236	Knob (Band Selector & AFC Switch)
SUA-960	Chassis
SUA-980	Chassis, Power
SMN-156	Angle-A
SMN-162	Angle-B
SMN-158	P-Angle-A
SMN-160	P-Angle-B
SUG-18	Guide
SDT-1242	Shaft, Tuning
SDE-6	Shaft, Loudness Bass & Treble Indicator
RDY-1	Shaft, Pulley
RDY-2	Shaft, Pulley
RDY-8	Shaft, Pulley

Stock No.	Description
MISCELLANEOUS (TUNER)	
SDR-4	Pulley, Dial Cord
RDR-8	Pulley, Dial Cord
RDR-13	Pulley, Dial Cord
RDR-14	Pulley, Dial Cord
SDD-27	Drum, Black
SDP-76	Pointer, Red
RDD-2027	Drum 27φ
RDD-2047	Drum 47φ
RDS-309	Spring, Dial Loud Bass & Treble Indicator
SDP-74	Pointer, Dial
SMY-22	Heat Sink, Transistor (TR11)
SMY-22-1	Heat Sink, Transistor (TR16 TR17)
SMP-14	Bracket, Dial Light Holder
SMA-54	Holder-A, Ferrite Antenna
SUW-262	Holder-B, Ferrite Antenna
SHG-946	Bushing Rubber
SMC-28	Shield Cover
SR-3P-1	Strain Relief Bushing
SPW-46	Washer
SMZ-12	Cover, Dial Light
ALTR3-6	Aluminum Rivet, Holder-B (SUW-262) M'tg
⊕STBr3-8	Screw, Holder-A (SMA-54) M'tg
⊕M3-6S	Screw, Drum M'tg
⊕M3-15P	Red Screw, Shassis M'tg
⊕M3-10 Black Ni	Screw, Jack M'tg
T3-10	Screw, Power Transformer M'tg
T3-8	Screw, Input Transformer M'tg
⊕STBr3-10	Screw, Escutcheon M'tg

www.hifiengine.com

REPLACEMENT PARTS LIST

Ref. No.	Stock No.	Description	
		CABINET (TUNER)	
1	SKM-1580 Comp	Cabinet Body (SKM-1580, SKE-144 & Screw)	Cabinet Complete (SYK-268)
2	SXE-6	Stay Comp. Right	
3	SXE-8	Stay Comp. Left	
4	⊕MM2.7—10	Screw, Stay M'tg	
5	SKE-134	Cover, Stay Right	
6	SKE-136	Cover, Stay Left	
7	⊕M3-6	Screw, Stay Cover M'tg	
8	SW-3	Washer, Stay Cover M'tg	
9	SMC-26	Shield Cover-A	
10	⊕MM2.1—6.3	Screw, Shield Cover-A M'tg	
11	SKW-46	Plate	
12	⊕MM2.7—6.3	Screw, Plate (SKW-46) M'tg	
13	SYE-22	Button, Magnet Catch	
14	⊕S3-10	Screw, Button M'tg	
15	SGX-384	Ornamental Plate	
16	SKE-150	Slide	
17	⊕SM2.1—8	Screw, Slide M'tg	
18	SKL-22	Cushion Rubber	
19	SKM-1560	Top Board	
20	SKE-138	Angle, Top Board	
21	FN-3 Black Ni	Nut, Angle M'tg	
22	SW-3	Washer, Angle M'tg	
23	SKH-52	Handle	
24	⊕SM2.4—13Cr	Screw, Handle M'tg	
25	SBE-158	Plate	
26	SGZ-20	Escutcheon Moulding	
27	⊕SM2.7—8	Screw, Escutsheon Moulding (SGZ-20) M'tg	
28	⊕M3-10 Black Ni	Screw, Top Board M'tg	
29	FN-3 Black Ni	Nut, Top Board M'tg	
30	SW-3	Washer, Top Board M'tg	
31	SGB-276	Badge-B, PANASONIC	
	SKF-900	Bottom Board	
	SHR-208-1	Leg, Black	
	⊕MM2.7—20	Screw, Leg M'tg	
	SGN-290	Label, Jack Indicator	

PRINTED IN JAPAN

www.hifiengine.com