ORDER NO. MD9404035C8

Service Manual

COMPACT disc DIGITAL AUDIO

MASH* multi-stage noise shaping

Tuner/Compact Disc Changer

SL-CH80

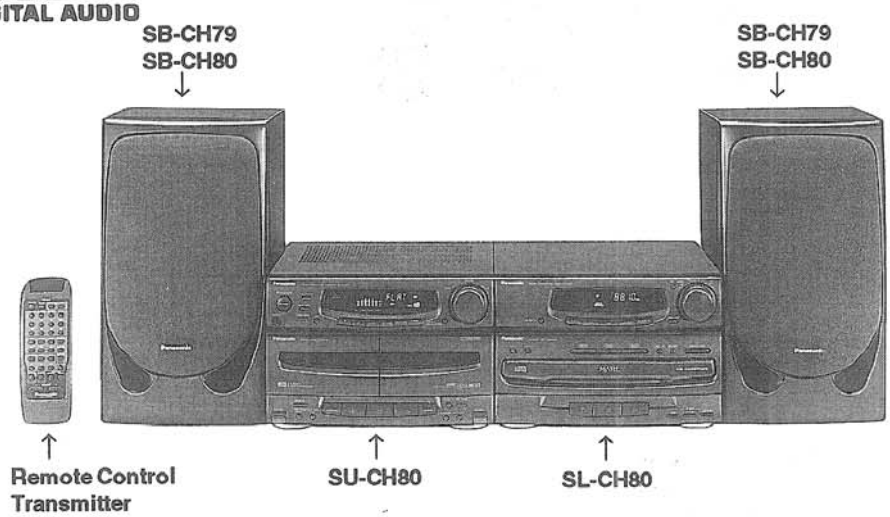

(The configuration of the speakers differs according to the area.)

Colour

(K) . . . Black Type

Area

Suffix for Model No.	Area	Colour
(E)	Europe and Great Britain	(K)
(EG)	Germany and Italy	
(GN)	Oceania	

Because of unique interconnecting cables, when a component requires service , send or bring in the entire system.

* MASH is a trademark of NTT

TRAVERSE DECK : RAE0113Z MECHANISM SERIES

■ SPECIFICATIONS

■ FM TUNER SECTION

Frequency range	87.50 – 108.00 MHz
Sensitivity	23.3 dBf (4.0 µV, IHF '58)
Total harmonic distortion	
MONO	0.3 %
STEREO	0.5 %
S/N	
MONO	60 dB (65 dB, IHF)
Image rejection at 98.1 MHz	35 dB
Stereo separation	
1 kHz	35 dB
Antenna terminal(s)	75Ω (unbalanced)

■ AM TUNER SECTION

Frequency range	
MW	522 – 1611 kHz
LW	144 – 288 kHz
Sensitivity (for 500mW)	
MW (at 999 kHz)	250µV/m
LW (at 252 kHz)	500µV/m

■ CD SECTION

Sampling frequency	44.1 kHz
Decoding	16 bit linear
Beam source/wavelength	Semiconductor laser/ 780nm
Number of channels	2 ch, stereo
Frequency response	20 Hz – 20 kHz (+1, –2 dB)
S/N	90 dB filter (JIS.A)
Wow and flutter	Below measureable limit
Digital filter	4 times over sampling
D/A converter	MASH (1 bit DAC)

■ GENERAL

Power consumption	130 W
Power supply	AC 50Hz, 230 – 240 V
Dimensions (W x H xD)	270 x 184.4 x 343.9 mm
Weight	4.2 kg

Note :

1. Specifications are subject to change without notice.
2. Weight and dimensions are approximate.
3. Total harmonic distortion is measured by the digital spectrum analyzer.

System	Tuner/Compact Disc Changer	Cassette Deck/Amplifier	Speakers
SC-CH80 E	SD-CH80 E		* SB-CH80 E
	SL-CH80 E	SU-CH80 E	
SC-CH80 EB	SD-CH80 EB		
	SL-CH80 E	SU-CH80 EB	
SC-CH80 EG	SD-CH80 EG		
	SL-CH80 EG	SU-CH80 EG	
SC-CH80 GN	SL-CH80 GN	SU-CH80 GN	SB-CH79 P

* Made in PAES

Panasonic

CONTENTS

PAGE

- PRECAUTION OF LASER DIODE ..... 2 & 3
- HANDLING PRECAUTIONS FOR TRAVERSE DECK 4
- LOCATION OF CONTROLS 5
- DISASSEMBLY INSTRUCTIONS ..... 6 ~ 14
- HOW TO CHECK THE SERVO AND MAIN P.C.B. ..... 14 &15
- INSTALLATION OF THE LOADING COMPONENTS ..... 15 ~ 17
- INSTALLATION OF THE TRAY BASE AND TRAY ASS'Y 17
- SCHEMATIC DIAGRAM ..... 18 ~ 29
- DIGITAL SERVO SYSTEM 30
- PRINTED CIRCUIT BOARD ..... 31 ~ 34
- BLOCK DIAGRAM ..... 35 ~ 38
- GENERAL INSPECTION 39

PAGE

- MEASUREMENTS AND ADJUSTMENTS ..... 40 ~ 43
- DISPLAY FUNCTIONS OF AUTOMATICALLY-ADJUSTED RESULTS ..... 44 & 45
- TERMINAL GUIDE OF ICs, TRANSISTORS & DIODES 45
- TERMINAL FUNCTION OF IC'S ..... 46 ~ 49
- PACKAGING 49
- CD LOADING UNIT PARTS LOCATION 50
- CD LOADING UNIT PARTS LIST 51
- WIRE CONNECTION DIAGRAM 52
- TROUBLESHOOTING GUIDE ..... 53 & 54
- CABINET PARTS LOCATION ..... 55 & 56
- REPLACEMENT PARTS LIST ..... 57 ~ 60
- RESISTORS & CAPACITORS ..... 61 ~ 64

NOTE :
Refer to the service manual for Model No. SU-CH80 (Order No. MD9404036C8) for information on "ACCESSORIES" , "CONNECTIONS" and "PACKAGING".

PRECAUTION OF LASER DIODE

CAUTION : This product utilizes a laser diode with the unit turned "on", invisible laser radiation is emitted from the pickup lens.
Wave length : 780 nm
Maximum output radiation power from pick up : 100 μW/VDE

Laser radiation from the pick up lens is safety level, but be sure the followings:

1. Do not disassemble the optical pick up unit, since radiation from exposed laser diode is dangerous.
2. Do not adjust the variable resistor on the pickup unit. It was already adjusted.
3. Do not look at the focus lens using optical instruments.
4. Recommend not to look at pick up lens for a long time.

ACHTUNG: Dieses Produkt enthält eine Laserdiode. Im eingeschalteten Zustand wird unsichtbare Laserstrahlung von der Lasereinheit abgestrahlt.

Wellenlänge : 780nm
Maximale Strahlungsleistung der Lasereinheit :100μW/VDE

Die Strahlung an der Lasereinheit ist ungefährlich, wenn folgende Punkte beachtet werden:

1. Die Lasereinheit nicht zerlegen, da die Strahlung an der freigelegten Laserdiode gefährlich ist.
2. Den werkseitig justierten Einstellregler der Lasereinhit nicht verstellen.
3. Nicht mit optischen Instrumenten in die Fokussierlinse blicken.
4. Nicht über längere Zeit in die Fokussierlinse blicken.

ADVARSEL: I dette a apparat anvendes laser.

THIS MUSIC SYSTEM IS CAPABLE OF RECEIVING THE NEW AM STEREO BROADCASTS FROM THE AM BAND RADIO STATIONS. HOWEVER LIKE MANY MUSIC SYSTEM CURRENTLY AVAILABLE ON THE MARKET IT WILL REPRODUCE THIS AM STEREO SIGNAL ONLY IN AM MONO, WHICH, IN EFFECT, IS OF NO LESSER QUALITY THAN YOUR AM MONO MUSIC SYSTEM.

USE OF CAUTION LABELS

Note : O mark indicate that caution label is used in that area.
X mark indicate that caution label is not used in that area.

Area	RQT4389ZAA	RQLS0078	RQLS0021
(E)	O	O	O
(EG)	O	X	O
(GN)	O	X	O

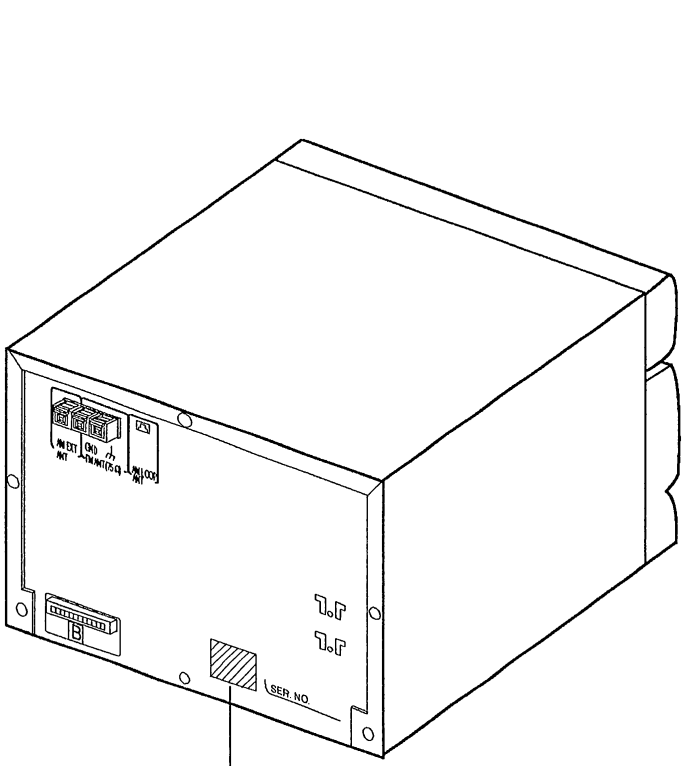

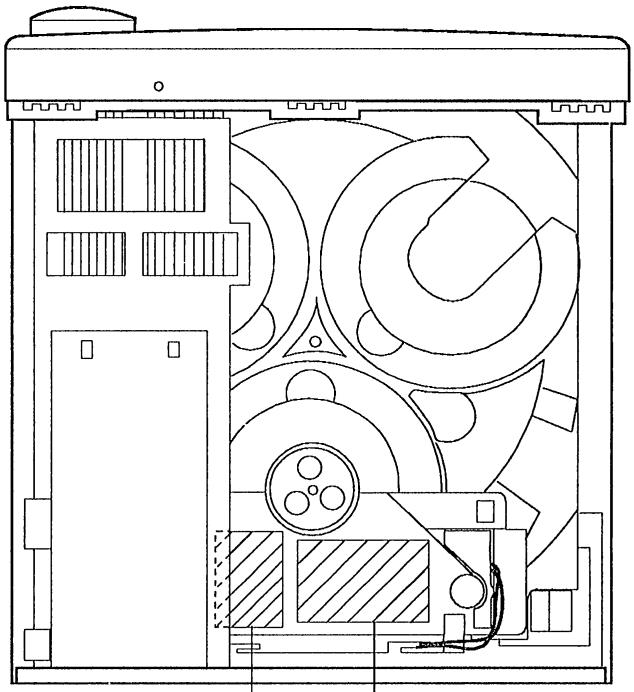

RQT4389ZAA

CLASS1
LASER PRODUCT
RQT4389ZAA

LUOKAN 1 LASERLAITE
KLASS 1 LASER APPARAT

RQLS0078
(for E area only)

VARO! Avattaessa ja suojalukitus ohitettaessa olet alttiina näkymätön lasersäteilylle. Älä katso säteesen.

VARNING! Osynlig laserstrålning när denna del är öppnad och spärren är urkopplad. Betrakta ej strålen.

ADVERSEL! Usynlig laserstråling når deksel åpnes og sikkerhedslås brytes. Unngå eksponering for strålen.
RQLS0078

RQLS0021

ADVARSEL: USYNLIG LASERSTRÅLIN VED ÅBNING, NÅR SIKKERHEDSAF-BRYDERE ER UDE AF FUNKTION. UNDGÅ UDSÆTTELSE FOR STRÅLING

VORSICHT-Unsichtbare Laserstrahlung, wenn Abdeckung geöffnet. Nicht dem Strahl aussetzen. RQLS0021

DANGER-Invisible laser radiation when open. AVOID DIRECT EXPOSURE TO BEAM.

HANDLING PRECAUTIONS FOR TRAVERSE DECK

The laser diode in the traverse deck (optical pickup) may break down due to potential difference caused by static electricity of clothes or human body.
So, be careful of electrostatic breakdown during repair of the traverse deck (optical pickup).

• Handling of traverse deck (optical pickup)

1. Do not subject the traverse deck (optical pickup) to static electricity as it ie extremely sensitive to electrical shock.
2. To prevent the breakdown of the laser diode, an antistatic shorting pin is inserted into the flexible board (FPC board). When removing or connecting the short pin, finish the job in as short time as possible.
3. Take care not to apply excessive stress to the flexible board (FPC board).
4. Do not turn the variable resistor (laser power adjustment). It has already been adjusted.

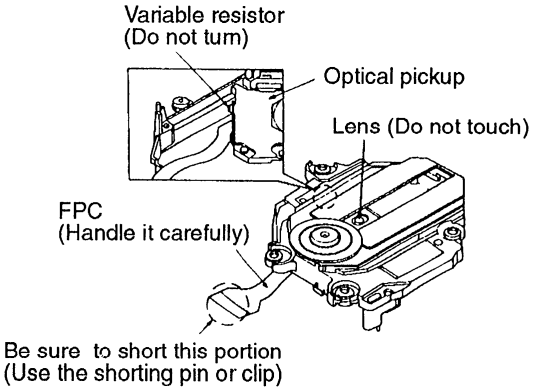

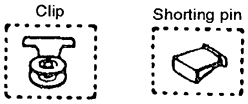

• Grounding for electrostatic breakdown prevention

1. Human body grounding
   Use the anti-static wrist strap to discharge the static electricity from your body.
2. Work table grounding
   Put a conductive material (sheet) or steel sheet on the area where the traverse deck (optical pickup) is placed, and ground the sheet.

Caution :
The static electricity of your clothes will not be grounded through the wrist strap. So, take care not to let your clothes touch the traverse deck (optical pickup).

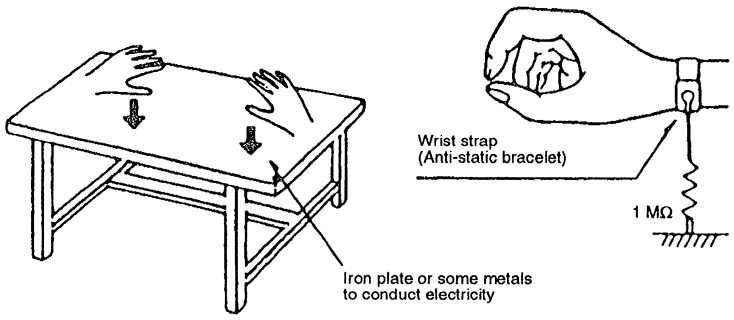

LOCATION OF CONTROLS

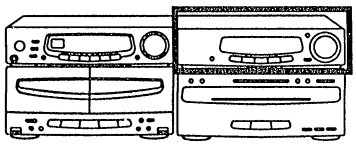

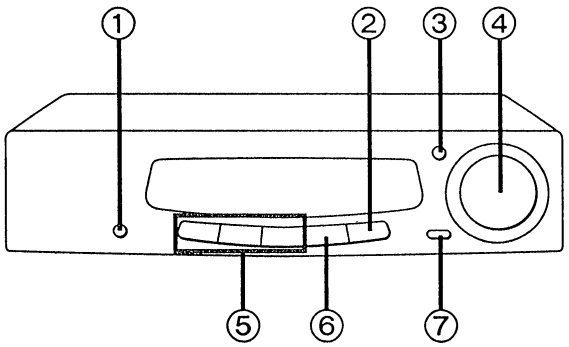

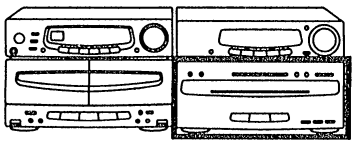

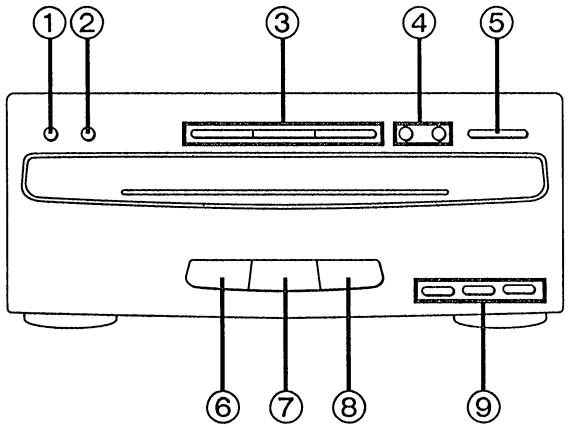

Tuner section

1. CD display mode select button (CD DISPLAY)
2. FM mode/beat proof button (FM MODE/BP)
3. Setting button (SET)
4. Tuning/CD skip dial (TUNING/CD SKIP)
5. Input select buttons (TAPE, AUX, CD)
6. Tuner/band select button (TUNER/BAND)
7. Tuning mode select button (TUNING MODE)

Compact disc changer section

1. Repeat button (REPEAT)
2. Random play button (RANDOM)
3. Disc buttons (DISC 1, DISC 2, DISC 3)
4. Skip/search buttons (⏮/◀◀ , ▶▶/⏭)
5. Disc tray open/close button (⏏ OPEN/CLOSE)
6. Stop button (□)
7. Pause button (▯▯)
8. Play button (▷)
9. Compact disc edit recording buttons (J.FIT, ALBUM, LAST FADE)

DISASSEMBLY INSTRUCTIONS

Warning : This product uses a laser diode. Refer to caution statements on page 2.
ACHTUNG: Die lasereinheit nicht zerlegen.
Die lasereheit dart nur gegen eine vom hersteller speziferte einheit ausgetauscht werden.
"ATTENTION SERVICER" Some chassis components may have sharp edges. Be careful when disassembling and servicing.

Ref. No. 1	Removal of the Cabinet
Procedure 1	• Remove 7 screws (❶ ~ ❼).

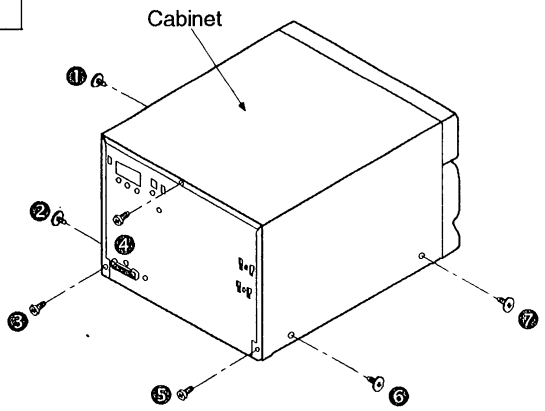

Ref. No. 3	Removal of the Rear Panel
Procedure 1 → 2 → 3	

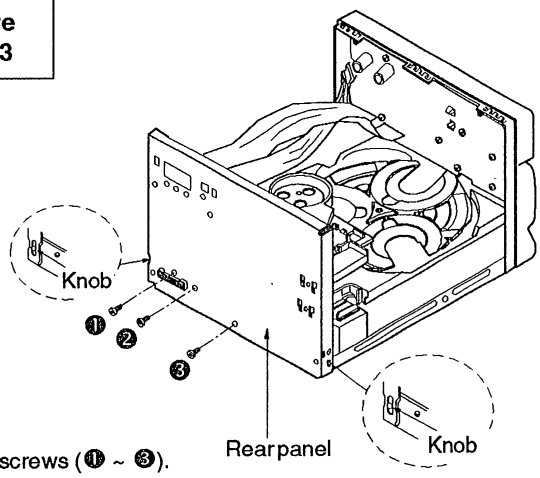

1. Remove 3 screws (❶ ~ ❸).
2. Remove the rear panel by releasing it from the knobs of the bottom board.

Ref. No. 2	Removal of the Tuner P.C.B. and Tuner P.C.B. Support
Procedure 1 → 2	1. Remove 3 screws (❶ ~ ❸). 2. Remove the wires W1 and W2 from the connectors CP1 and CP2 respectively. 3. Release 2 ribs and take out the tuner P.C.B.

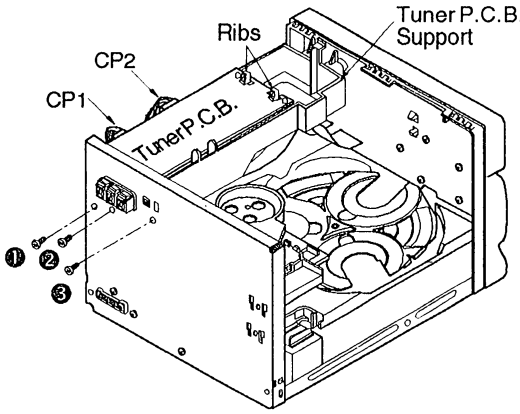

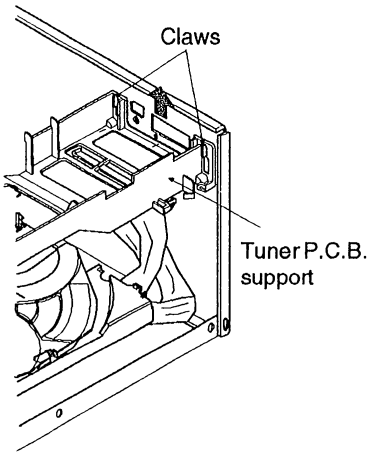

4. Release the 2 claws from the rear panel by lifting up the rear end of the tuner P.C.B. support.

Ref. No. 4	Removal of the LED P.C.B.
Procedure 1 → 4	• Release 2 claws.

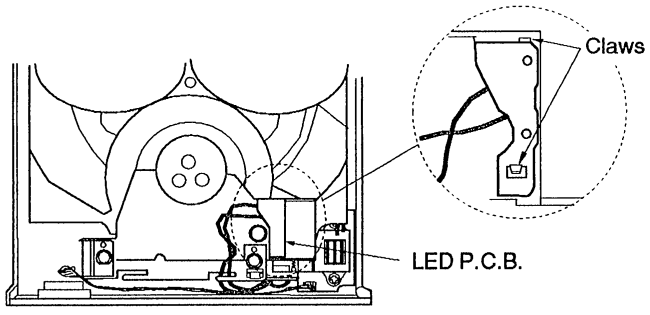

Ref. No. 5	Removal of the Clamp Plate
Procedure 1 → 2 → 4 → 5	1. Remove 2 screws (❶ & ❷). 2. Release 1 claw.

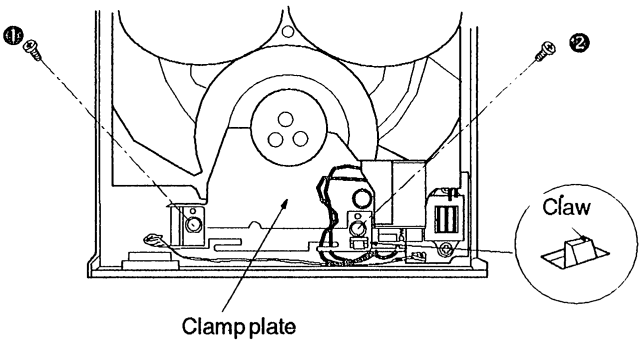

Ref. No. 6	Removal of the Magnet Holder, magnet and Disc Clamper
Procedure 1 → 2 → 4 → 5 → 6	

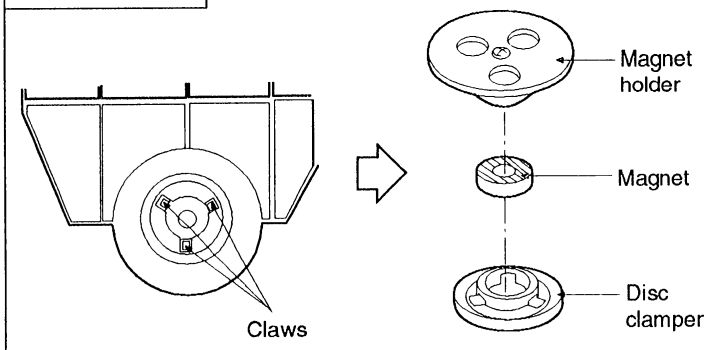

- Release 3 claws

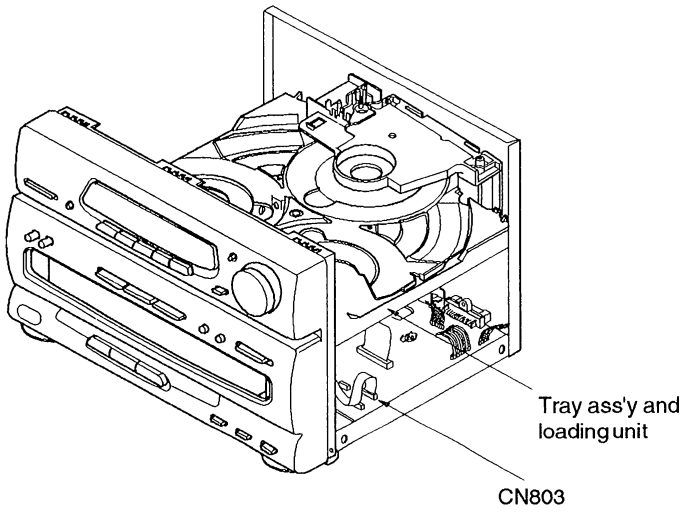

6. Lift up the tray ass'y and the loading unit and then remove 1 wire connector CN803.

Ref. No. 7	Removal of the Tray Ass'y and Loading Unit
Procedure 1 → 2 → 7	

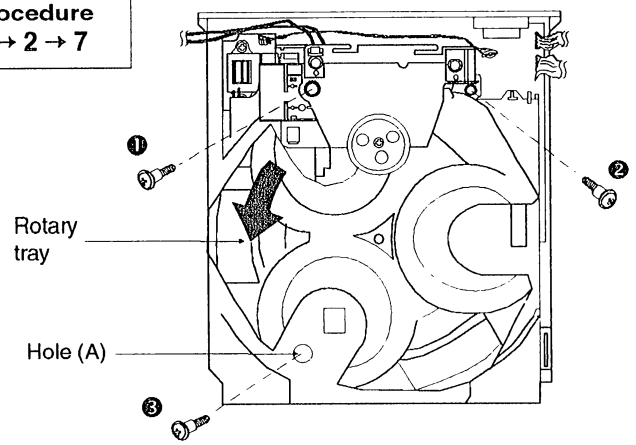

1. Remove 2 screws (❶, ❷).
2. Rotate the ratary tray to the position that can be confirmed the hole (A).
3. Remove 1 screw (❸).

Note:
In case that screw ❸ cannot be removed due to narrowness of hole (A), refer to the instruction of Ref. No. 13, remove the tray base, and remove screw ❸.

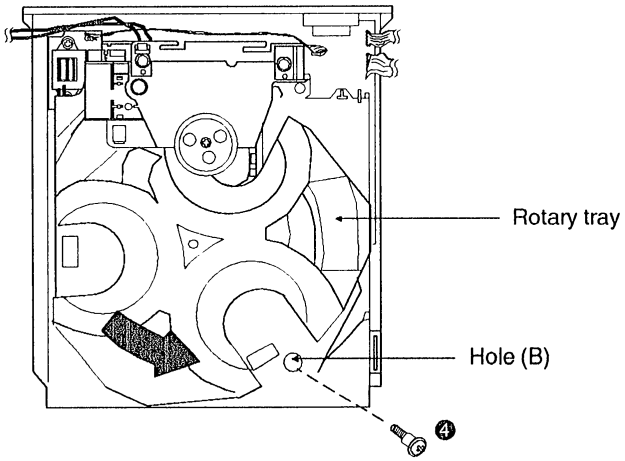

4. Rotate the ratary tray to the further position that can be confirmed the hole (B).
5. Remove 1 screw (❹).

Ref. No. 8	Removal of the Rotary Lock Lever
Procedure 1 → 2 → 4 → 5 → 8	1. Remove the spring. 2. Release the claw.

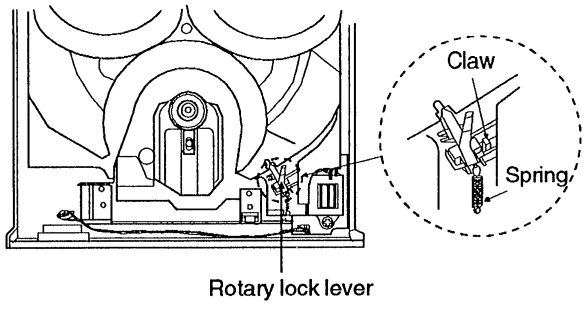

Ref. No. 9	Removal of the Main P.C.B.
Procedure 1 → 2 → 3 → 9	1. Remove 3 cables from connectors CN800, CN803 and CN900B. 2. Remove 2 screws (❶ & ❷). 3. Remove the cable W801A by desoldering it.

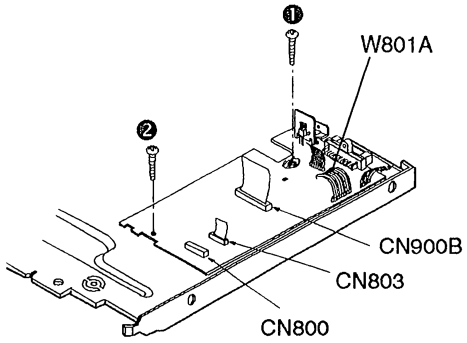

Ref. No. 10	Removal of the Power Transformer
Procedure 1 → 10	

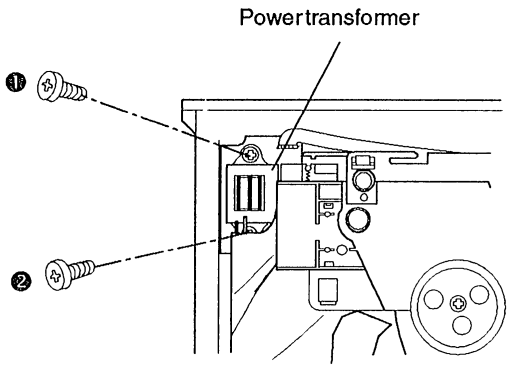

1. Remove 2 screws (❶ & ❷).

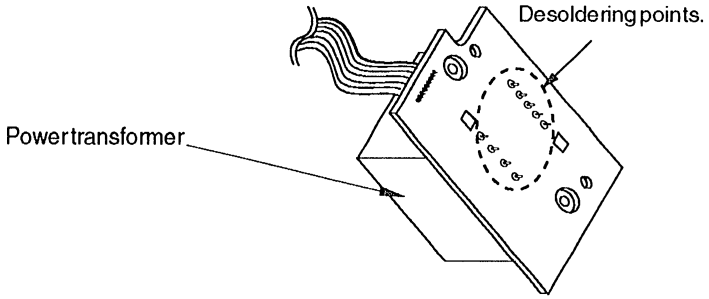

2. Desolder 9 points and take out the Power Transformer.

Ref. No. 11	Removal of the Front Panel
Procedure 1 → 11	

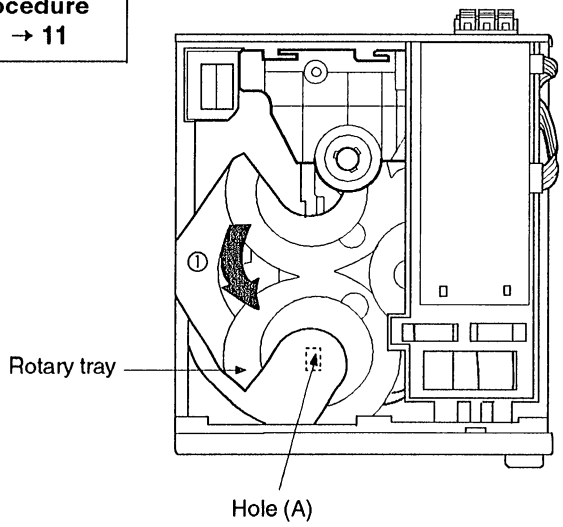

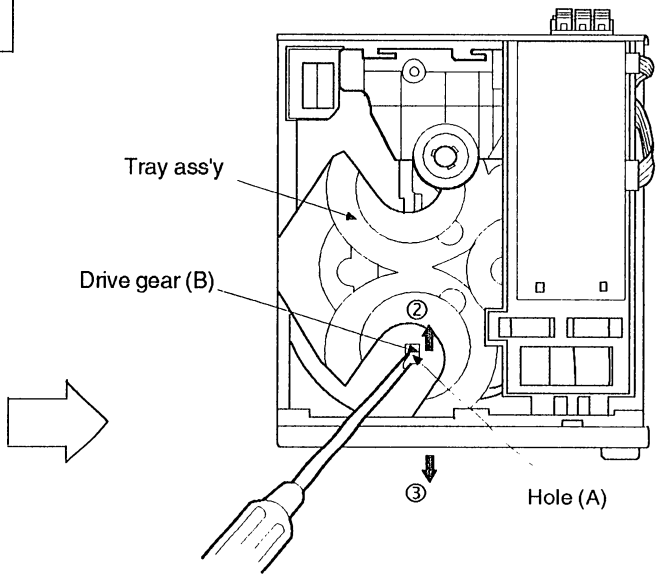

1. Rotate the rotary tray to the position that can be confirmed the hole (A) in the direction of arrow ①.
2. Pressing the drive gear (B) in the direction of arrow ② with inserting the (–) screwdriver into the hole (A), the tray ass'y will move slightly in the direction of arrow ③. Then, pull out the tray ass'y in the direction of the arrow ③.
3. Remove 4 flat cables from connectors CN900A, CN902A, CN800 and CN803.
4. Remove 2 screws (❶ & ❷) from the bottom of the front panel.
5. Release 1 claw and pull out the front panel.

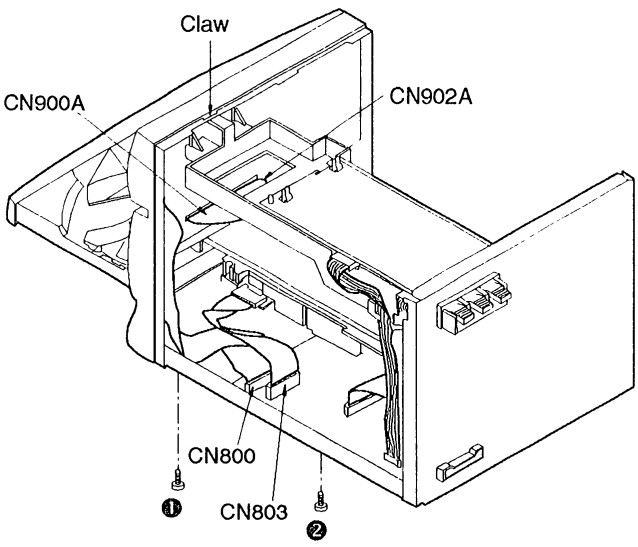

Ref. No. 12	Removal of the Panel P.C.B. and Operation P.C.B.
Procedure 1 → 11 → 12	

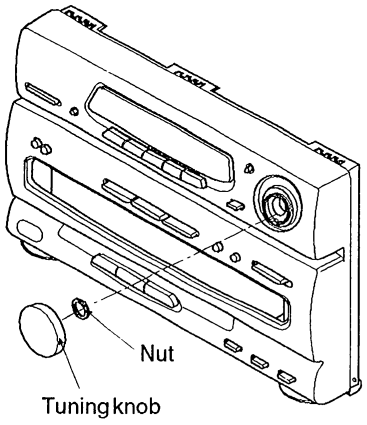

1. Remove the tuning knob with a flat head (–) screwdriver.
2. Unscrew the nut.

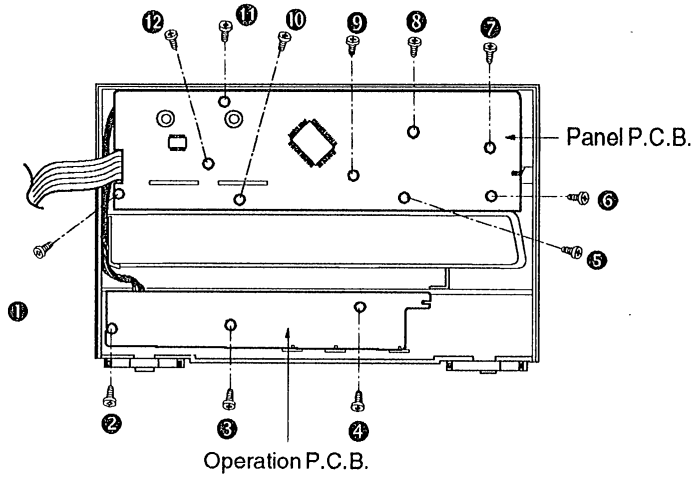

3. Remove 12 screws (❶ ~ ⓬).

Ref. No. 13	Removal of the Loading Unit and Tray base
Procedure 1 → 11 → 13	

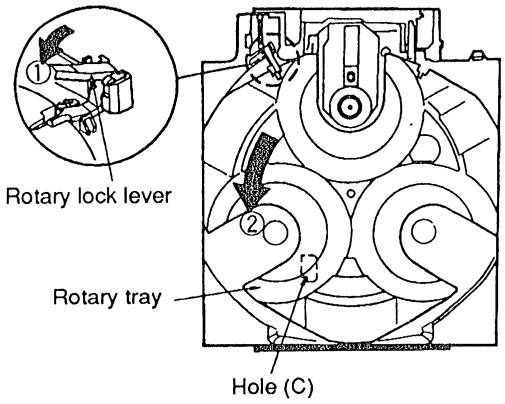

1. While pressing the rotary lock lever in the direction of arrow ① and then rotate the rotary tray to the position that can be confirmed the hole (C) in the direction of arrow ②.

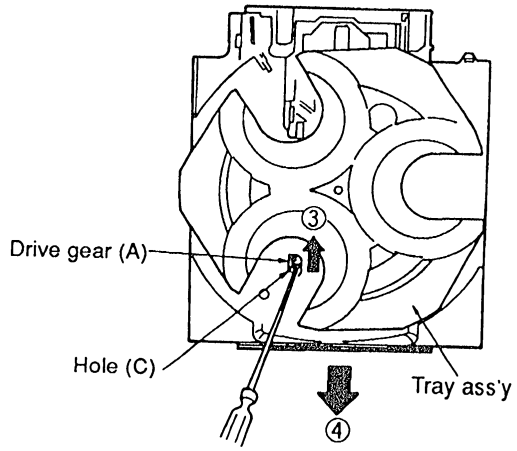

2. Pressing the drive gear (A) in the direction of arrow ③ with inserting the (–) screwdriver in the hole (C), the tray ass'y moves slightly in the direction of arrow ④. Then, pull the tray ass'y in the direction of arrow ④.

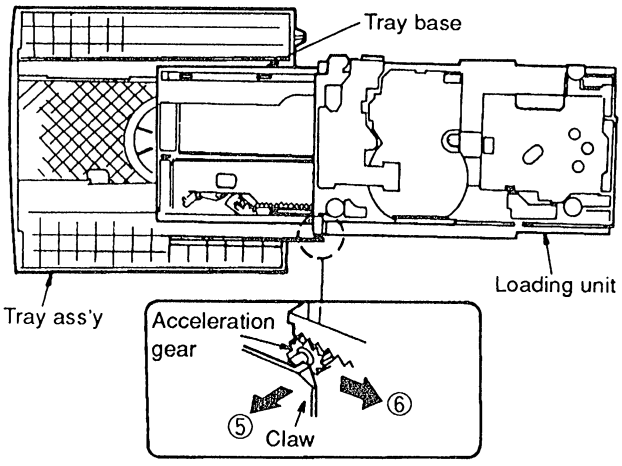

5. Release the claw in the direction of arrow ⑤ and then remove the acceleration gear in the direction of arrow ⑥.

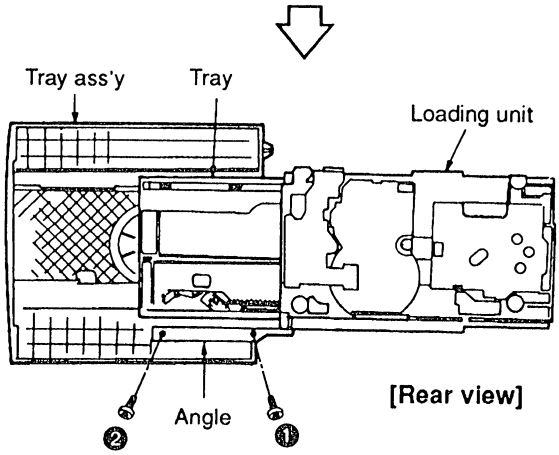

1. Remove the 2 screws (❶, ❷).
2. Remove the angle.

Ref. No. 14	Removal of the Travese Deck and Conversion Lever
Procedure 1 → 4 → 5 → 7 → 13 → 14	

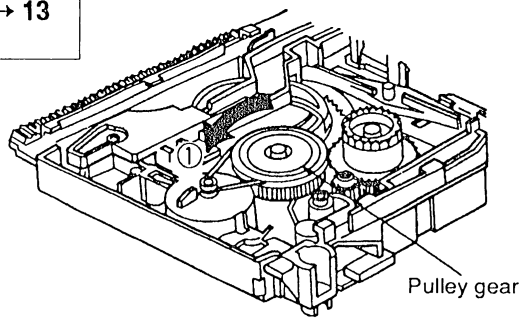

1. Rotate the pulley gear to full position in the direction of arrow ①.

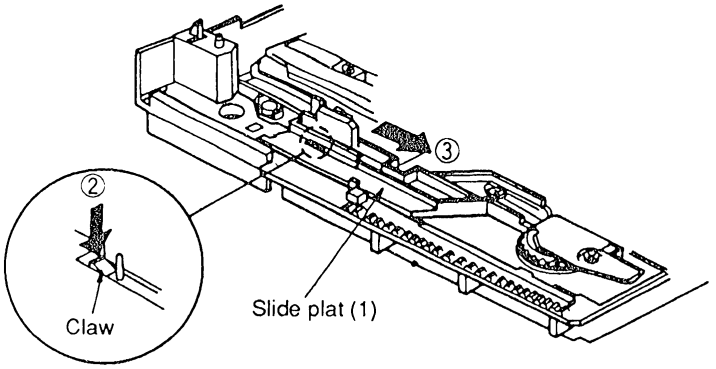

2. Push the claw in the direction of arrow ②, and then move the slide plate (1) in the direction of arrow ③.

Ref. No. 15	Removal of the Rotary Tray
Procedure 1 → 2 → 4 → 5 → 7 → 13 → 15	

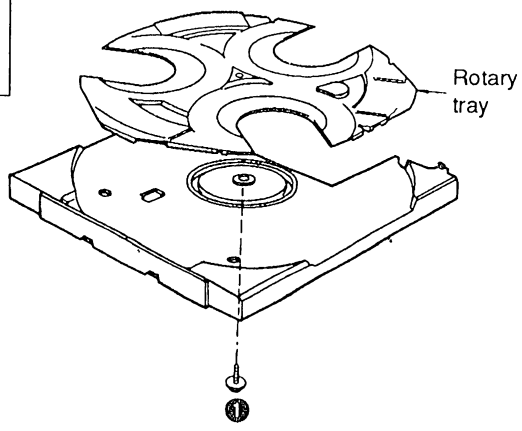

• Remove the 1 screw (❶).

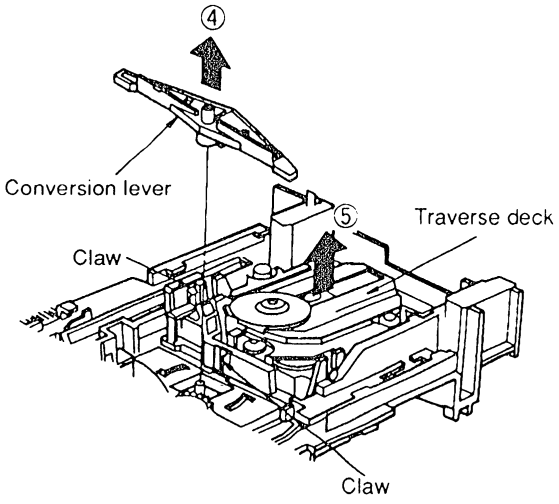

3. Remove the conversion lever in the direction of arrow ④.
4. Release the claw and then remove the traverse deck in the direction of arrow ⑤.

Ref. No. 16	Removal of the Tray Base
Procedure 1 → 4 → 5 → 7 → 13 → 16	

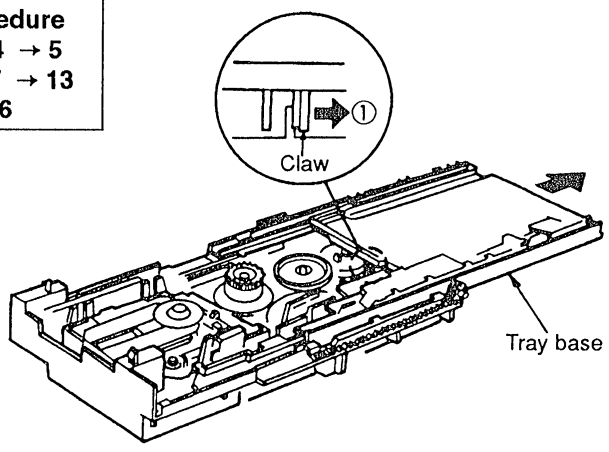

• Release the claw in the direction of arrow ① and then remove the tray base in the direction of arrow ②.

Ref. No. 17	Removal of the Angle (A) and Angle (B)
Procedure 1 → 4 → 5 → 7 → 13 → 16 → 17	

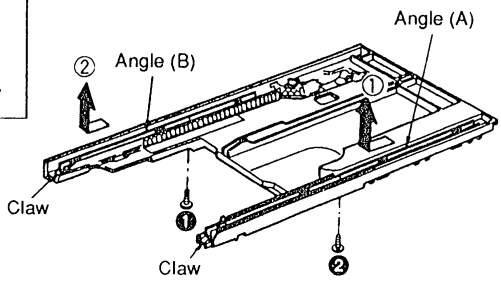

■ Removal of the angle (A)

1. Remove the 1 screw (❶).
2. Release the claw and then remove the angle (A) in the direction of arrow ①.

■ Removal of the angle (B)

1. Remove the 1 screw (❷).
2. Release the claw and then remove the angle (B) in the direction of arrow ②.

Ref. No. 18	Removal of the Tray Lock Lever and Lock Gear

Procedure
1 → 4 → 5 → 7 → 13 → 16 → 18

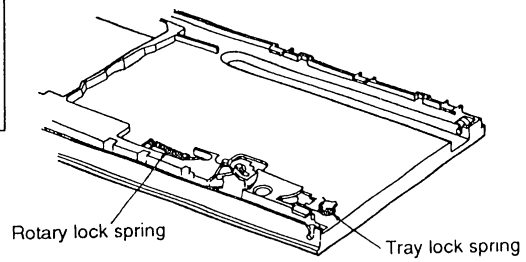

1. Remove the rotary lock spring and tray lock spring.

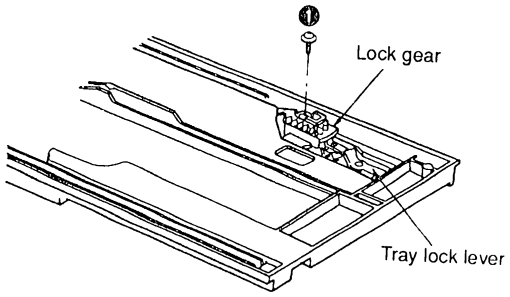

2. Remove the 1 screw (❶).

Ref. No. 19	Removal of the Slide Plate (1)

Procedure
1 → 2 → 4 → 5 → 7 → 13 → 14 → 19

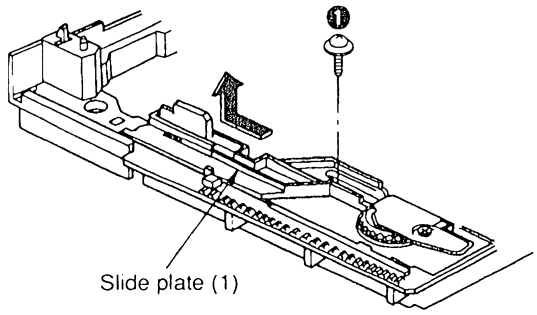

1. Remove the 1 screw (❶).
2. Remove the slide plate (1) in the direction of arrow.

Ref. No. 20	Removal of the Slide Plate (3)

Procedure
1 → 4 → 5 → 7 → 13 → 14 → 20

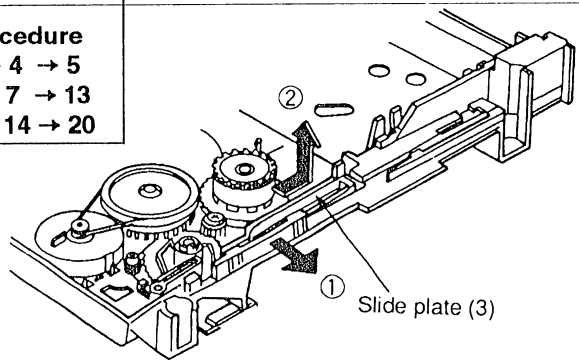

• Push the slide plate (3) in the direction of arrow ①, and then remove it in the direction of arrow ②.

Ref. No. 21	Removal of the Slide Plate (2)

Procedure
1 → 4 → 5 → 7 → 13 → 13 → 14 → 20 → 21

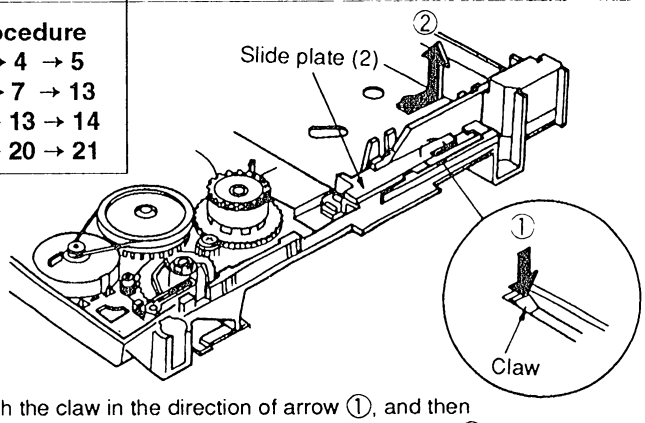

• Push the claw in the direction of arrow ①, and then remove the slide plate (2) in the direction of arrow ②.

Ref. No. 22	Removal of the Pulley Gear

Procedure
1 → 4 → 5 → 7 → 13 → 22

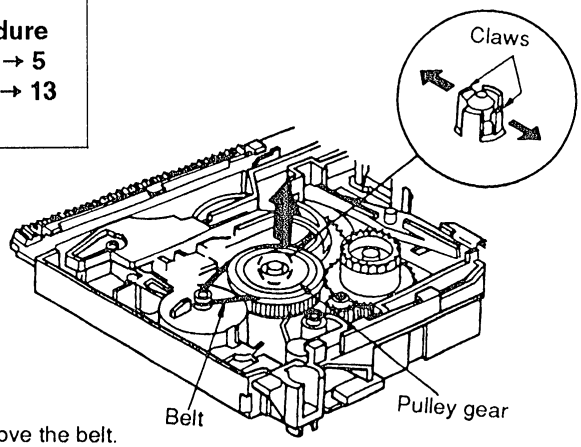

1. Remove the belt.
2. Release the 2 claws and then remove the pulley gear in the direction of arrow.

Ref. No. 23	Removal of the Oscillating Gear

Procedure
1 → 4 → 5 → 7 → 13 → 23

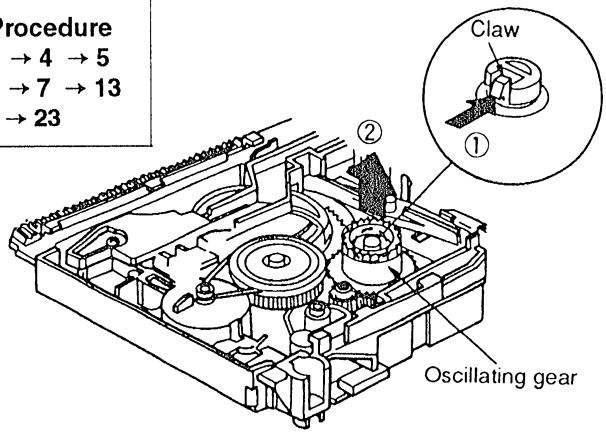

• Release the claw in the direction of arrow ① and then remove the oscillating gear in the direction of arrow ②.

Ref. No. 24	Removal of the Gear Holder, Drive Gear (A) and Drive Gear (B)

Procedure
1 → 2 → 4 → 5 → 7 → 13 → 24

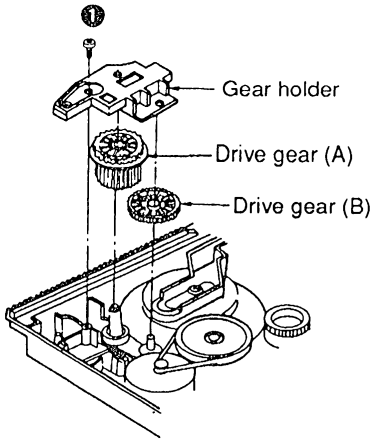

1. Remove the 1 screw (❶).
2. Remove the gear holder, drive gear (A) and drive gear (B).

Ref. No. 25	Removal of the Drive Cam Gear

Procedure
1 → 2 → 4 → 5 → 7 → 13 → 14 → 19 → 22 → 23 → 24 → 25

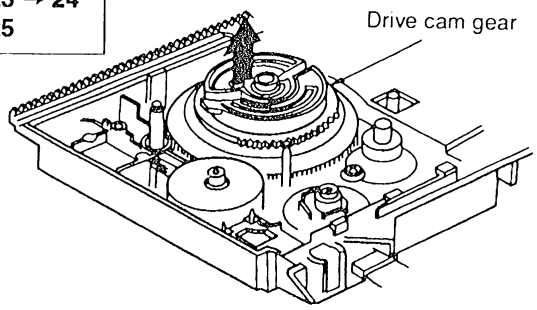

• Remove the drive cam gear in the direction of arrow.

Ref. No. 26	Removal of the Change Cam Gear

Procedure
1 → 2 → 4 → 5 → 7 → 13 → 14 → 20 → 22 → 26

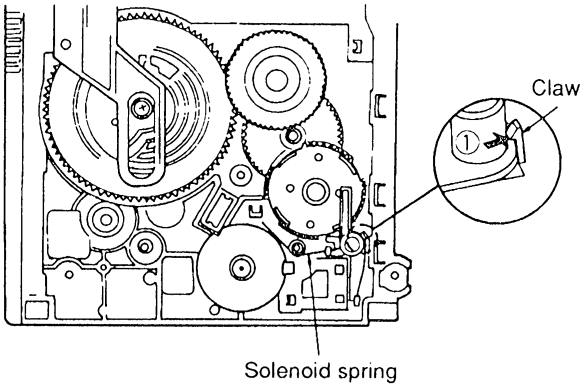

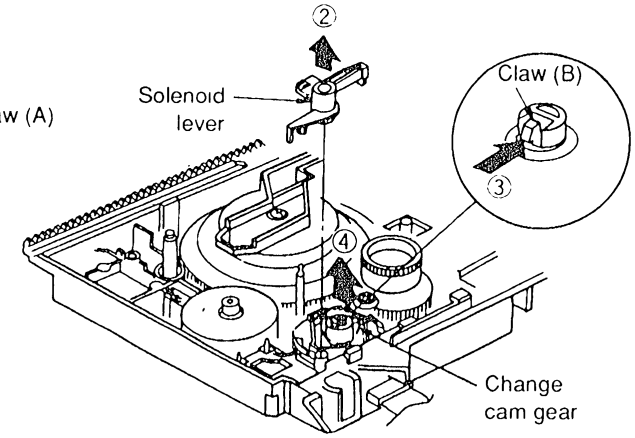

1. Remove the solenoid spring.
2. Release the claw (A) in the direction of arrow ① and then remove the solenoid lever in the direction of arrow ②.
3. Release the claw in the direction of arrow ③ and then remove the change cam gear in the direction of arrow ④.

Ref. No. 27	Removal of the Reduction Gear and Gear Lever

Procedure
1 → 4 → 5 → 7 → 13 → 14 → 19 → 20 → 22 → 23 → 24 → 25 → 26 → 27

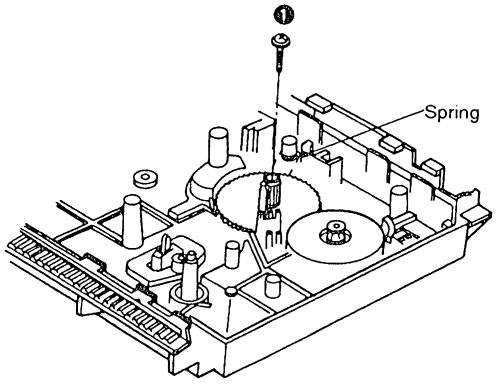

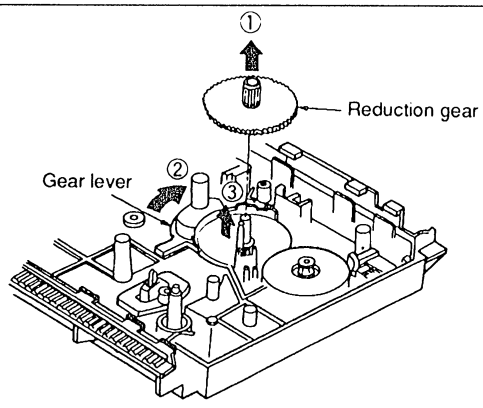

1. Remove the spring.
2. Remove the 1 screw (❶).
3. Remove the reduction gear in the direction of arrow ①.
4. Turn the gear lever in the direction of arrow ②, and then remove it in the direction of arrow ③.

Ref. No. 28	Removal of the Loading Motor P.C.B.

Procedure
1 → 4 → 5 → 7 → 13 → 14 → 19 → 20 → 21 → 22 → 23 → 24 → 25 → 26 → 28

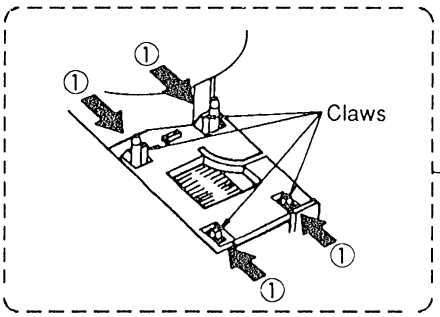

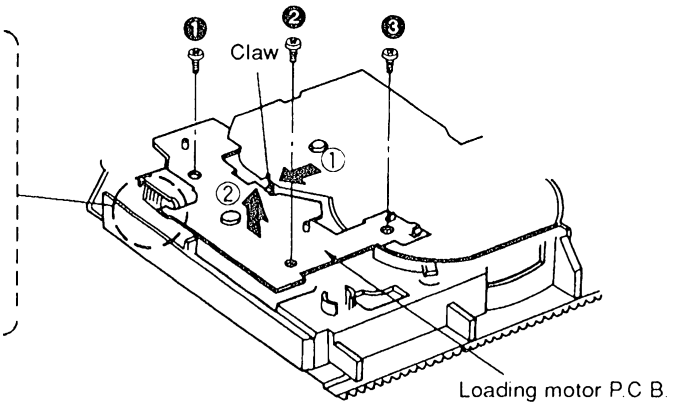

1. Remove the 3 screws (❶~❸).
2. Release the 5 claws in the direction of arrow ①.
3. Remove the loading motor P.C.B. in the direction of arrow ②.

Ref. No. 29	Removal of the Loading Motor

Procedure
1 → 4 → 5 → 7 → 13 → 14 → 19 → 20 → 21 → 22 → 23 → 24 → 25 → 26 → 28 → 29

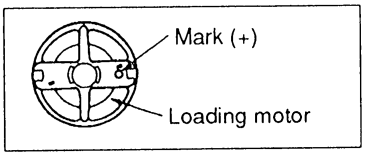

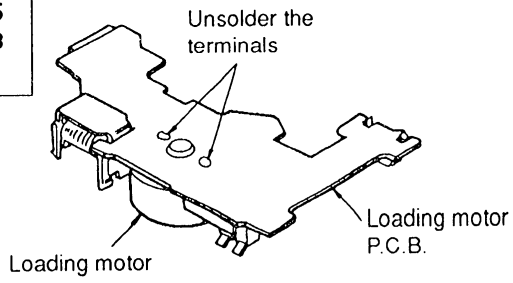

• Unsolder the terminals of the loading motor.

Ref. No. 30	Removal of the Photo Transistor P.C.B.

Procedure
1 → 2 → 4 → 5 → 7 → 30

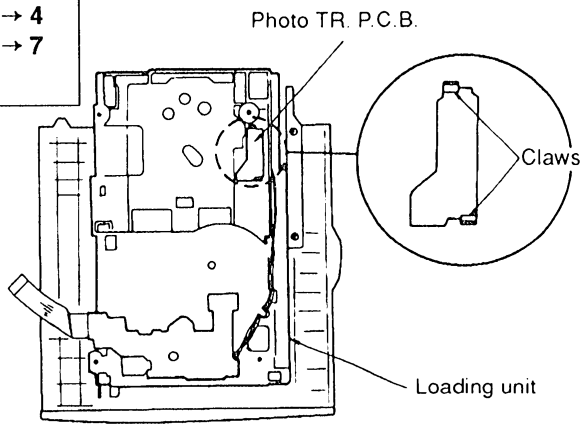

• Release the 2 claws.

Ref. No. 31	Removal of the Servo P.C.B.

Procedure
1 → 2 → 4 → 5 → 7 → 13 → 14 → 31

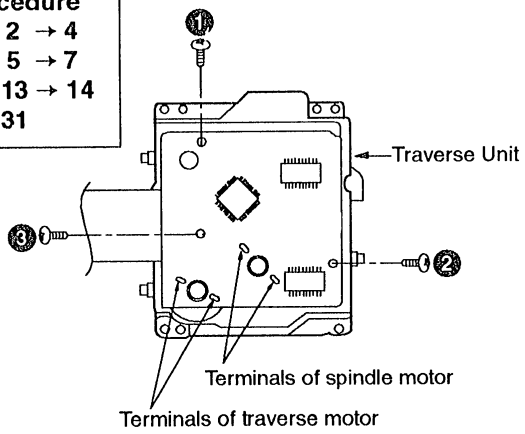

1. Remove the 3 screws (❶ ~ ❸).
2. Unsolder the spindle motor terminals (2 points).
3. Unsolder the traverse motor terminals (2 points).

• Removal of the flexible cable
Push the top of the connector in the direction of arrow ①, and then pull out the flexible cable in the direction of arrow ②.

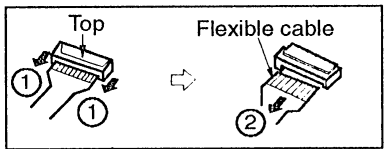

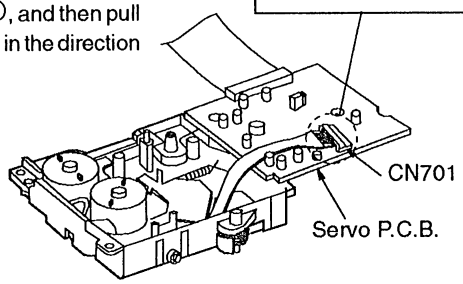

4. Remove the FPC board (CN701).

Note: Insert a shorting pin into the traverse unit flexible cable. (Refer to "handling precautions for traverse deck" on page 2.)

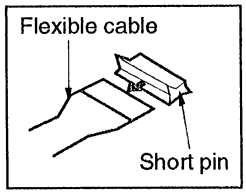

INSTALLING THE SERVO P.C.B.

1. Before installing the servo P.C.B., move the optical pickup toward the outer edge from the mark "▲".
   [Otherwise, the rest detect switch (S701) mounted on the servo P.C.B. may be damaged.]
2. Connect the flexible cable to the connector (CN701).
3. Install the servo P.C.B. in the traverse deck unit with the three screws.
4. Solder the two terminals of the traverse motor and the two terminals of the spindle motor.

Note: Connect the flexible cable to the connector (CN701) firmly.
Tighthen the 3 screws before soldering the terminals.

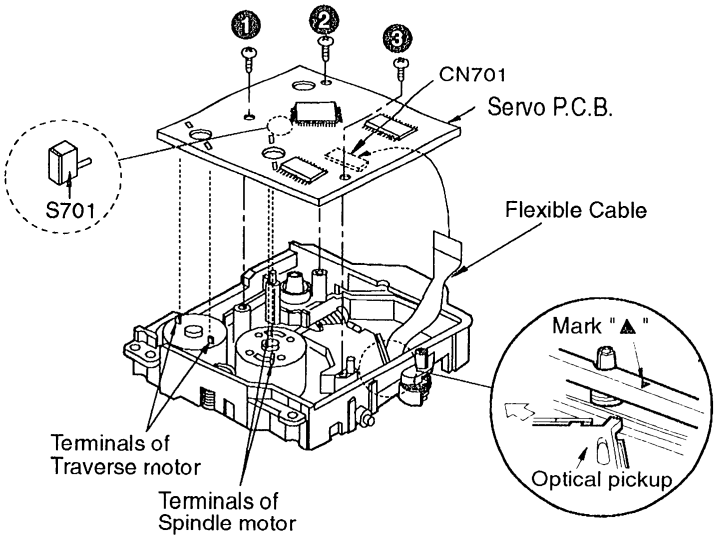

HOW TO CHECK THE SERVO AND MAIN P.C.B.

CHECK THE SERVO P.C.B.

1. Remove the cabinet. (See Ref. No. 1 of the disassembly instructions.)
2. Remove the clamp plate. (See Ref. No. 5 of the disassembly instruction.)
3. Remove the magnet holder, magnet and disc clamper. (See Ref. No. 6 of the disassembly instruction.)

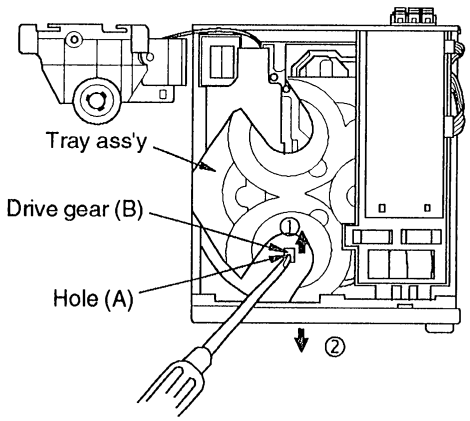

4. Pressing the drive gear (B) in the direction of arrow① with the inserting the (–) screwdriver in the hole (A), the tray ass'y will move slightly in the direction of arrow②. Then, pull out the tray ass'y in the direction of arrow②.

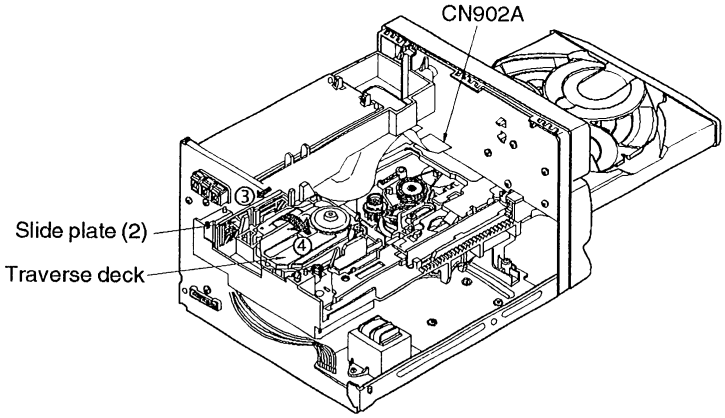

5. Remove the connector CN902A.
6. Pressing the slide plate (2) in the direction of arrow③, and then remove the traverse deck in the direction of arrow④.

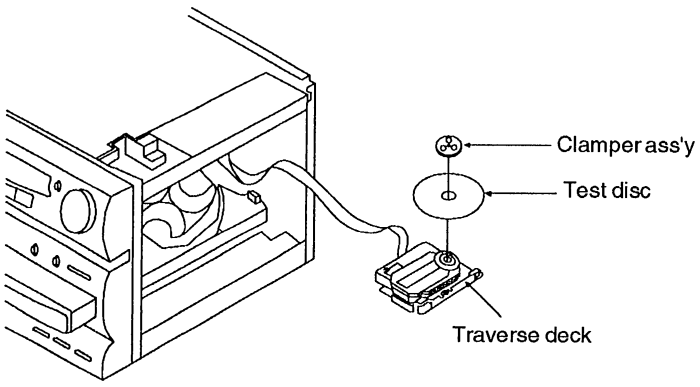

7. Place the test disc and secure it by using the clamper ass'y.
8. Restore the tray ass'y.
9. Reconnect the connector CN902A.

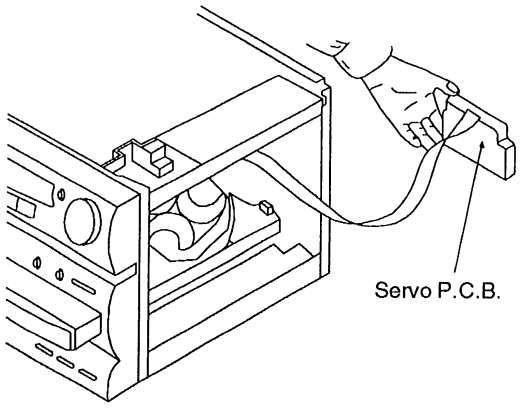

10. When checking the soldered surface of the servo P.C.B., do as shown above.

CHECK THE MAIN P.C.B.

1. Remove the cabinet. (See Ref. No. 1 of the disassembly instruction.)
2. Remove the tuner P.C.B. and tuner P.C.B. support. (See Ref. No. 2 of the disassembly instruction.)
   Note : Do not remove the connectors CP1 and CP2.
3. Remove the rear panel. (See Ref. No. 3 of the disassembly instruction.)

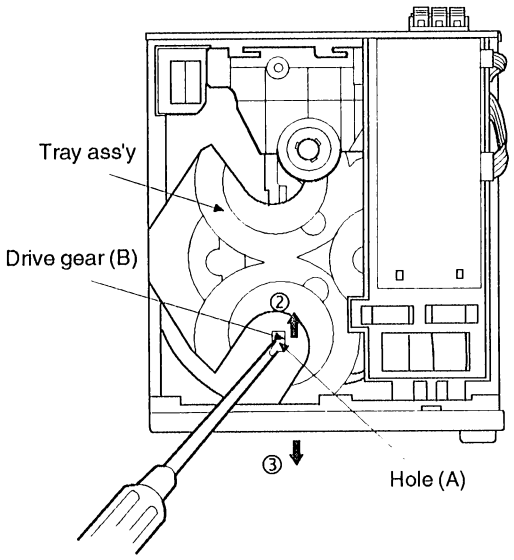

4. Pressing the drive gear in the direction of arrow① with inserting the (–) screwdriver into the hole (C), the tray ass'y will move slightly in the direction of arrow②. Then, pull out the tray ass'y in the direction of arrow ②.

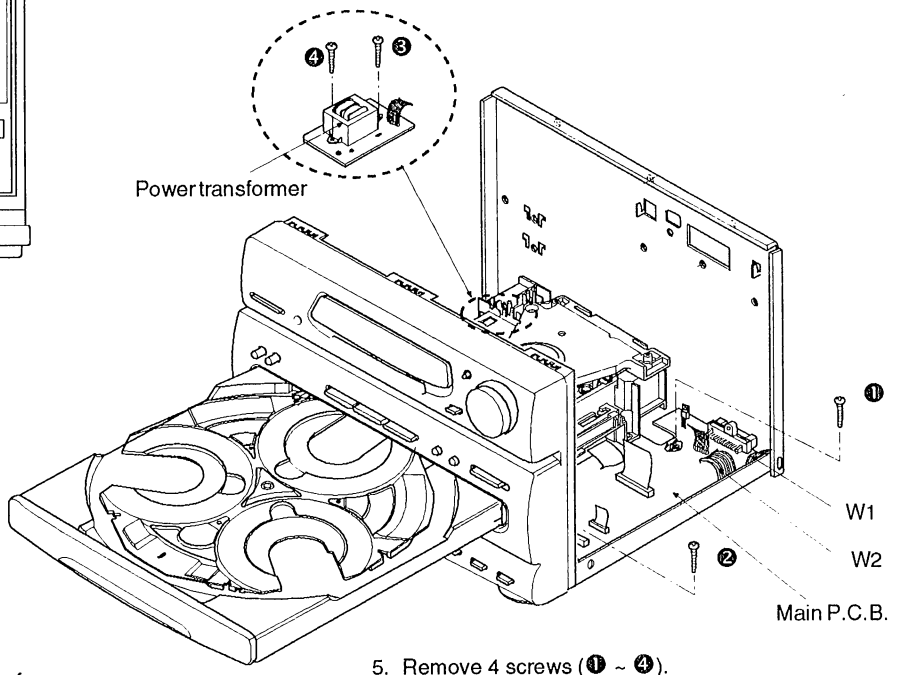

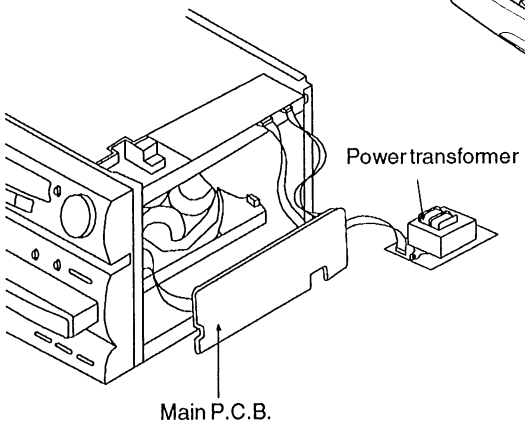

5. Remove 4 screws (❶ ~ ❹).
6. Remove the power transformer.
7. Remove the main P.C.B.
8. When checking the soldered surface of the main P.C.B., do as shown above.

INSTALLATION OF THE LOADING COMPONENTS

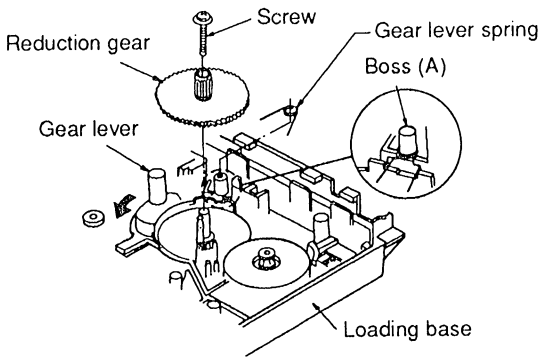

Fig.1

1. Install the gear lever on the loading base and then slide the gear lever in the direction of arrow ①. (See Fig.1.)
2. Install the reduction gear and secure it with a screw. (See Fig.1.)
3. Install the gear lever spring to the boss (A). (See Fig.1.)

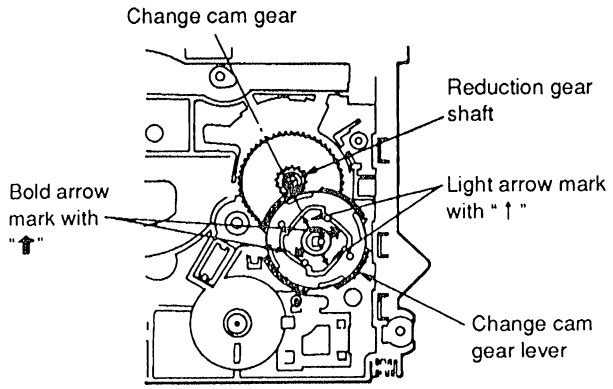

Fig.2

4. Install the change cam gear. (See Fig.2.)
   Note: Align the tip of the light arrow marked with " ↑ " on the change cam gear with the axis of the reduction gear shaft.

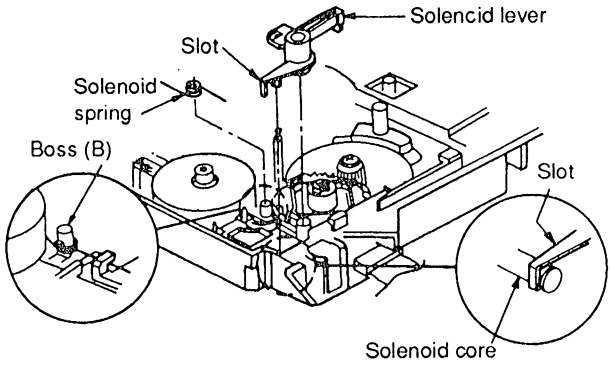

Fig.3

5. Install the solenoid lever. (See Fig.3)
   Note: Align the slot of the solenoid lever with the solenoid core.
6. Install the solenoid spring to the boss (B). (See Fig.3.)

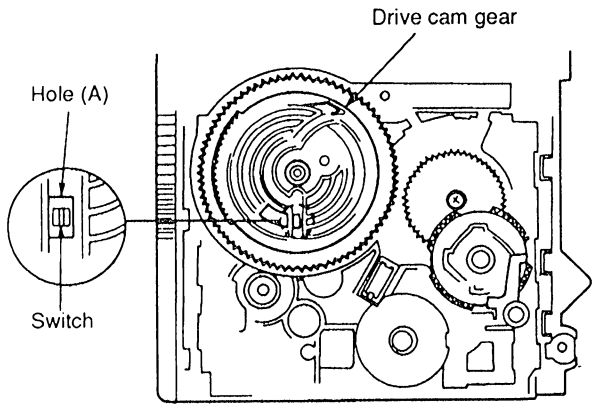

Fig.4

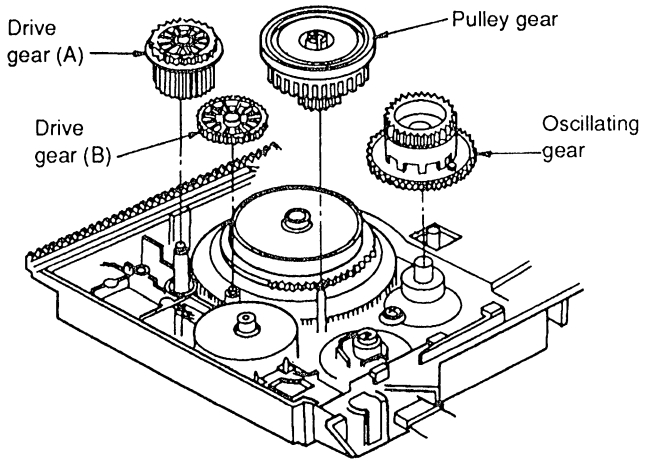

Fig.5

do

7. Align the hole (A) of the drive cam gear with the switch, and then insert the drive cam gear. (See Fig. 4)
   Note: In case that the drive cam gear is inserted into the holes except the hole (A) of the drive cam gear, the switch may be damaged.

8. Install the drive gear (B), the drive gear (A), the oscillating gear ass'y and the pulley gear. (See Fig. 5)

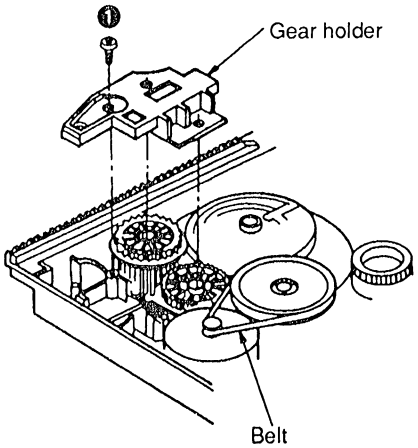

Fig.6

9. Install the gear holder and secure it with a screw ❶. (See Fig.6.)
10. Install the belt. (See Fig.6.)

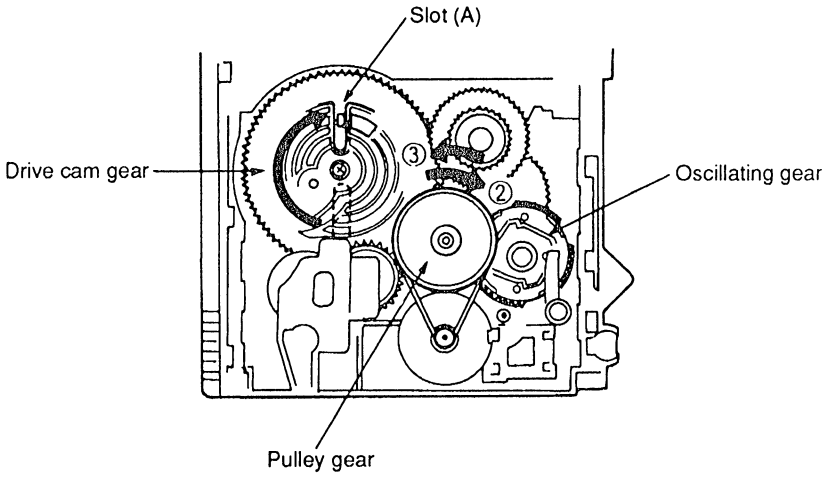

Fig.7

11. Rotate the pulley gear in the direction of arrow ② and then rotate the pulley gear to full position in the direction of arrow ③ when the oscillating gear stops.
12. Rotate the drive cam gear so that the slot (A) of the drive cam gear is put into a given position as shown in fig.7.

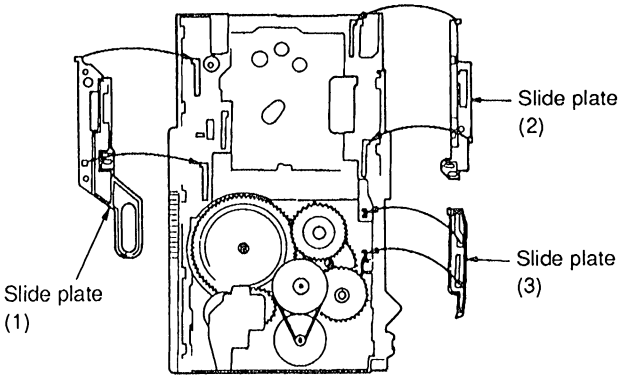

Fig.8

13. Install slide plate (1), slide plate (2) and slide plate (3).

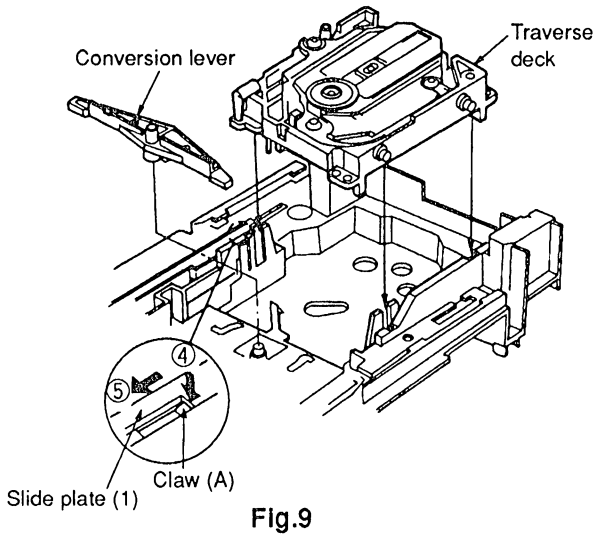

Fig.9

14. Press catch (A) in the direction of arrow ④ and then push slide (1) of the loading unit in the direction of arrow ⑤. (See Fig.9)
15. Install the traverse deck and the conversion lever. (See Fig.9)

ting

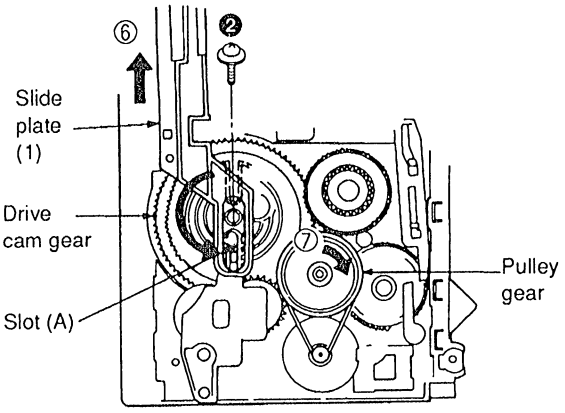

Fig.10

16. Push slide plate (1) in the direction of arrow ⑥, so that the catch (A) in Fig.9 engages with slide plate (1).
17. Secure slide plate (1) with a screw (❷).
18. Rotate the pulley gear in the direction of arrow ⑦ so that slot (A) of the drive can gear is in the position shown in Fig.10.

gear

INSTALLATION OF THE TRAY BASE AND TRAY ASS'Y

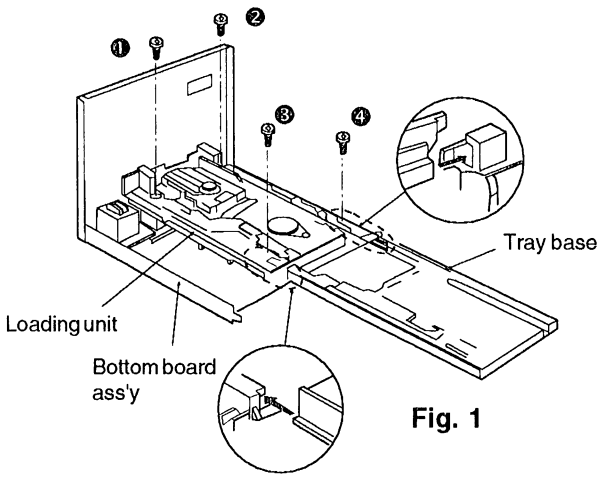

Fig. 1

1. Install the loading unit on the bottom board ass'y and secure it with 4 screws (❶ ~ ❹). (See fig. 1)
2. Install the tray base on the loading unit. (See fig. 1)

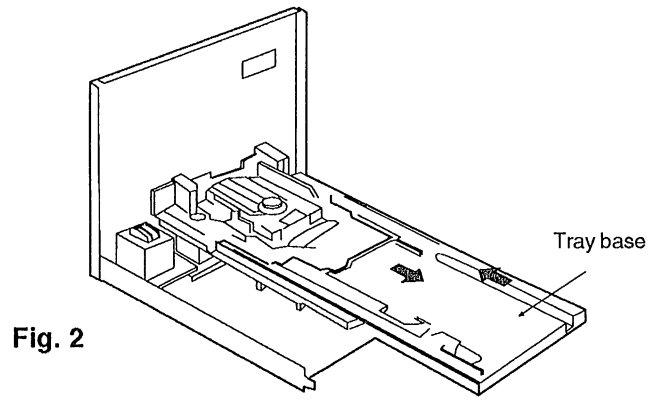

Fig. 2

3. After sliding the tray base in the direction of arrow①, draw the tray base gradually in the direction of arrow②. (See Fig 2.) Slide the tray base until the tray base stops.

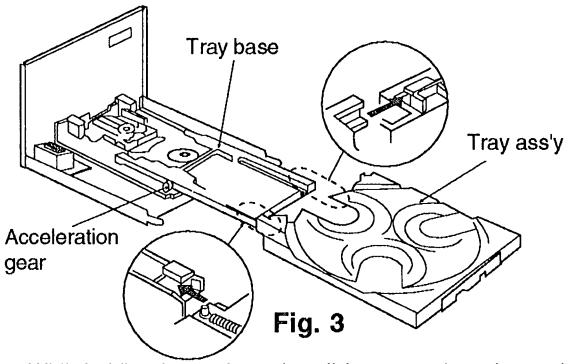

Fig. 3

4. While holding the tray base, install the tray ass'y on the tray base and feed the tray ass'y slowly. (See fig.3)
5. After engaging the acceleration gear, release the tray base which is held and feed the tray ass'y. (See fig.3)

SCHEMATIC DIAGRAM

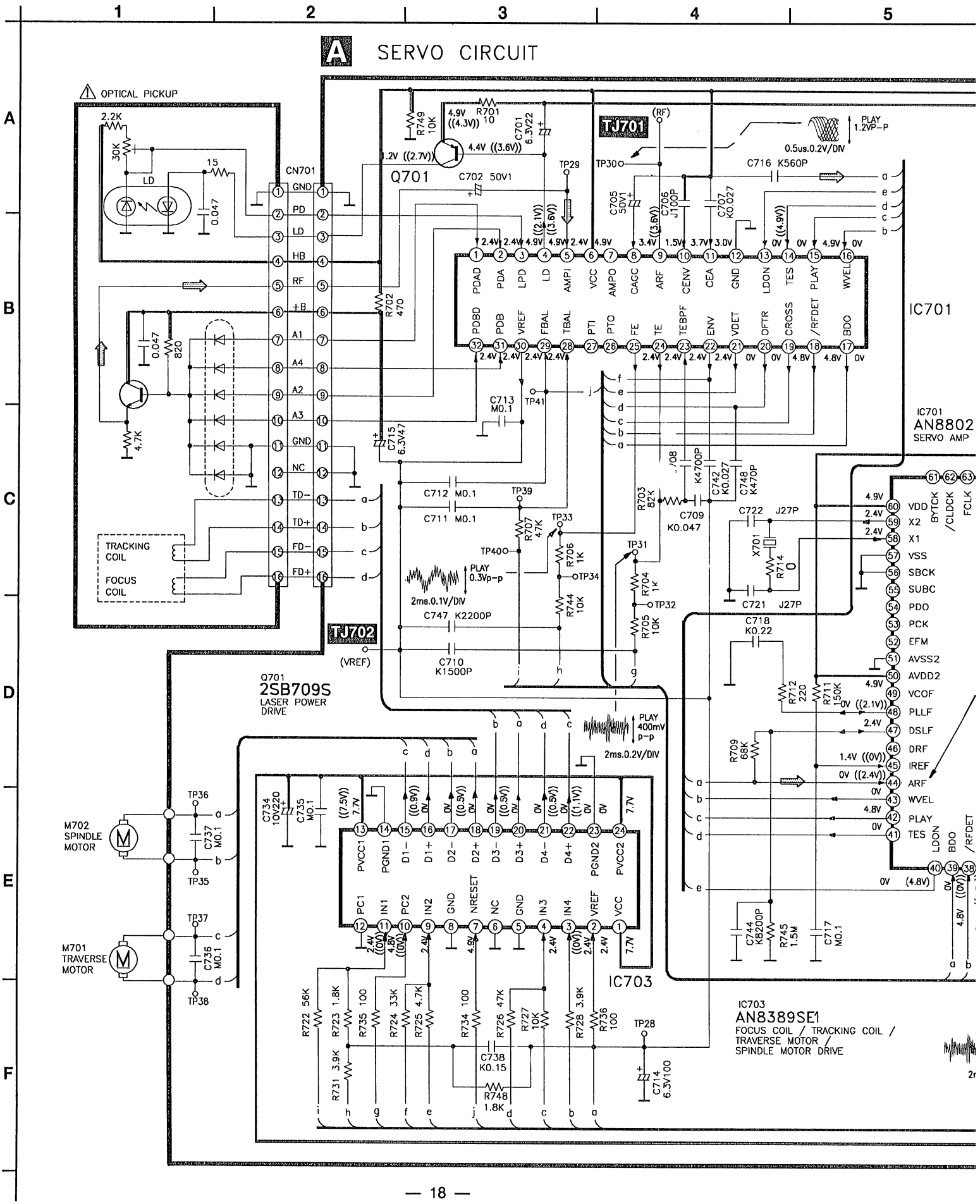

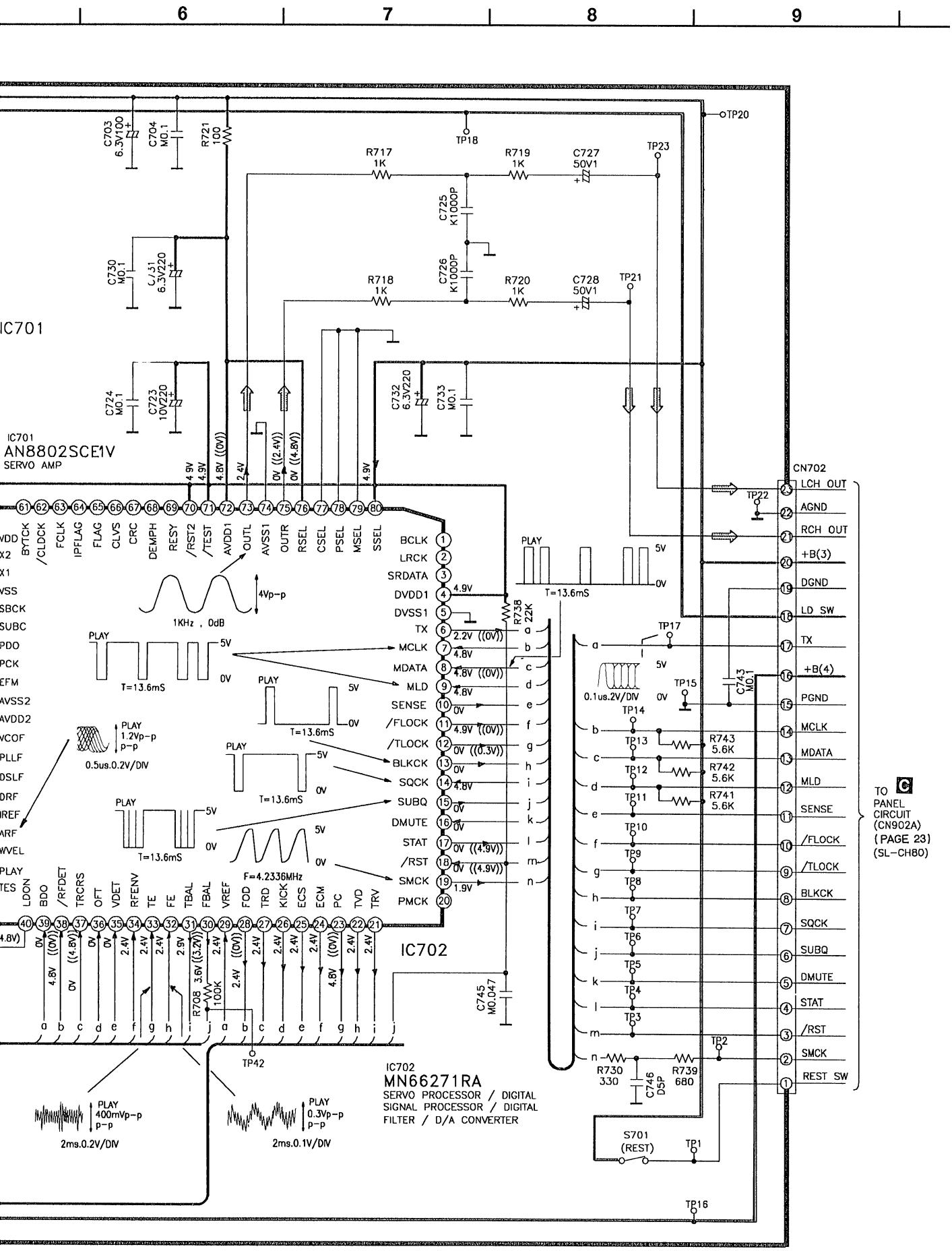
6
7
8
9
IC701
IC701
AN8802SCE1V
SERVO AMP
IC702
MN66271RA
SERVO PROCESSOR / DIGITAL
SIGNAL PROCESSOR / DIGITAL
FILTER / D/A CONVERTER
CN702
LCH OUT
AGND
RCH OUT
+B(3)
DGND
LD SW
TX
+B(4)
PGND
MCLK
MDATA
MLD
SENSE
/FLOCK
/TLOCK
BLKCK
SQCK
SUBQ
DMUTE
STAT
/RST
SMCK
REST SW
TO C PANEL CIRCUIT (CN902A) (PAGE 23) (SL-CH80)
BCLK
LRCK
SRDATA
DVDD1
DVSS1
TX
MCLK
MDATA
MLD
SENSE
/FLOCK
/TLOCK
BLKCK
SQCK
SUBQ
DMUTE
STAT
/RST
SMCK
PMCK
C703 6.3V100
C704 M0.1
R721 100
C730 M0.1
C731 6.3V220
C724 M0.1
C723 10V220
C732 6.3V220
C733 M0.1
R717 1K
R719 1K
C727 50V1
C725 K1000P
C726 K1000P
R718 1K
R720 1K
C728 50V1
C745 M0.047
C743 M0.1
C746 D5P
R738 22K
R743 5.6K
R742 5.6K
R741 5.6K
R730 330
R739 680
R708 100K
TP1
TP2
TP3
TP4
TP5
TP6
TP7
TP8
TP9
TP10
TP11
TP12
TP13
TP14
TP15
TP16
TP17
TP18
TP20
TP21
TP22
TP23
TP42
S701 (REST)
4Vp-p
1KHz , 0dB
PLAY
5V
0V
T=13.6mS
PLAY 1.2Vp-p p-p
0.5us.0.2V/DIV
F=4.2336MHz
PLAY 400mVp-p p-p
2ms.0.2V/DIV
PLAY 0.3Vp-p p-p
2ms.0.1V/DIV
0.1us.2V/DIV

NOTES:

< For LOADING MOTOR CIRCUIT >

- S501 : Traverse deck position detect switch.
- S502 : Disc tray full open detect switch.
- S503 : Disc tray half open detect switch.

< For SERVO CIRCUIT >

- S701 : Rest switch.

< For PANEL CIRCUIT >

- S901 : Set switch. (SET)
- S902 : Tuning mode select switch. (TUNING MODE)
- S903 : FM mode/beatproof select switch. (FM MODE/BP)
- S904 : Tuner/band select switch. (TUNER/BAND)
- S905 : CD function select switch. (CD)
- S906 : AUX function select switch. (AUX)
- S907 : TAPE function select switch. (TAPE)
- S908 : CD display switch. (CD DISPLAY)
- S910 : Loading tray open/close switch. (⏏OPEN/CLOSE)
- S911 : CD forward skip switch. (▶▶/▶▶|)
- S912 : CD reverse skip switch. (|◀◀/◀◀)
- S913 : CD random play switch. (RANDOM)
- S914 : CD repeat switch. (REPEAT)
- S915 : Disc 1 select switch. (DISC1)
- S916 : Disc 2 select switch. (DISC2)
- S917 : Disc 3 select switch. (DISC3)
- S918 : Last fade edit switch. (LAST FADE)
- S919 : Sequential CD recording switch. (ALBUM)
- S920 : Fit edit switch. (J.FIT)
- S921 : CD Play switch. (▷)
- S922 : CD pause switch. (▯▯)
- S923 : CD stop switch. (□)

... – B LINE

... + B LINE

... FM/MW/LW SIGNAL LINE

... CD SIGNAL LINE

< GENERAL >

- The voltage value and waveforms are the reference voltage of this unit measured by DC electronic voltmeter (high impedance) and oscilloscope on the basis of chassis.
  Accordingly, there may arise some error in voltage values and waveforms depending upon the internal impedance of the tester or the measuring unit.

< For Main circuit >

No Mark ... Tape Playback { } ... FM/MW/LW (( )) ... CD
( ) ... Other

< For Servo circuit >

No mark ... STOP ( ) ... Playback (Test disc 1kHz, L+R 0 dB)

CAUTION !
IC and LSI are sensitive to static electricity.
Secondary trouble can be prevented by taking care during repair.
- Cover the parts boxes made of plastics with aluminum foil.
- Ground the soldering iron.
- Put a conductive mat on the work table.
- Do not touch the pins of IC or LSI with fingers directly.

- Important safety notice :
  Components identified by ⚠ mark have special characteristics important for safety.
  When replacing any of these components, use only manufacturer's specified parts.

- **This schematic diagram may be modified at anytime with the development of new technology.**

SCHEMATIC DIAGRAM

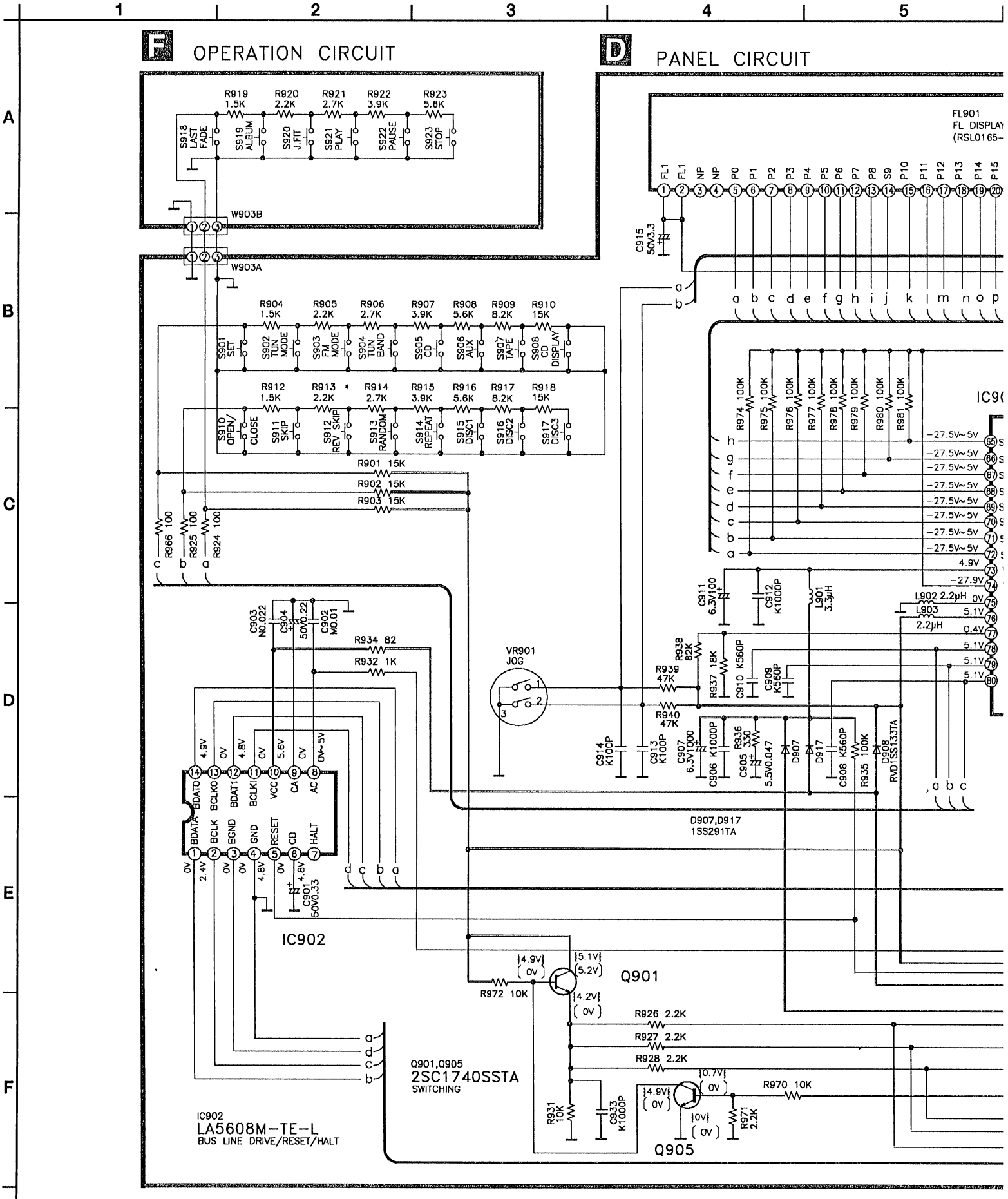

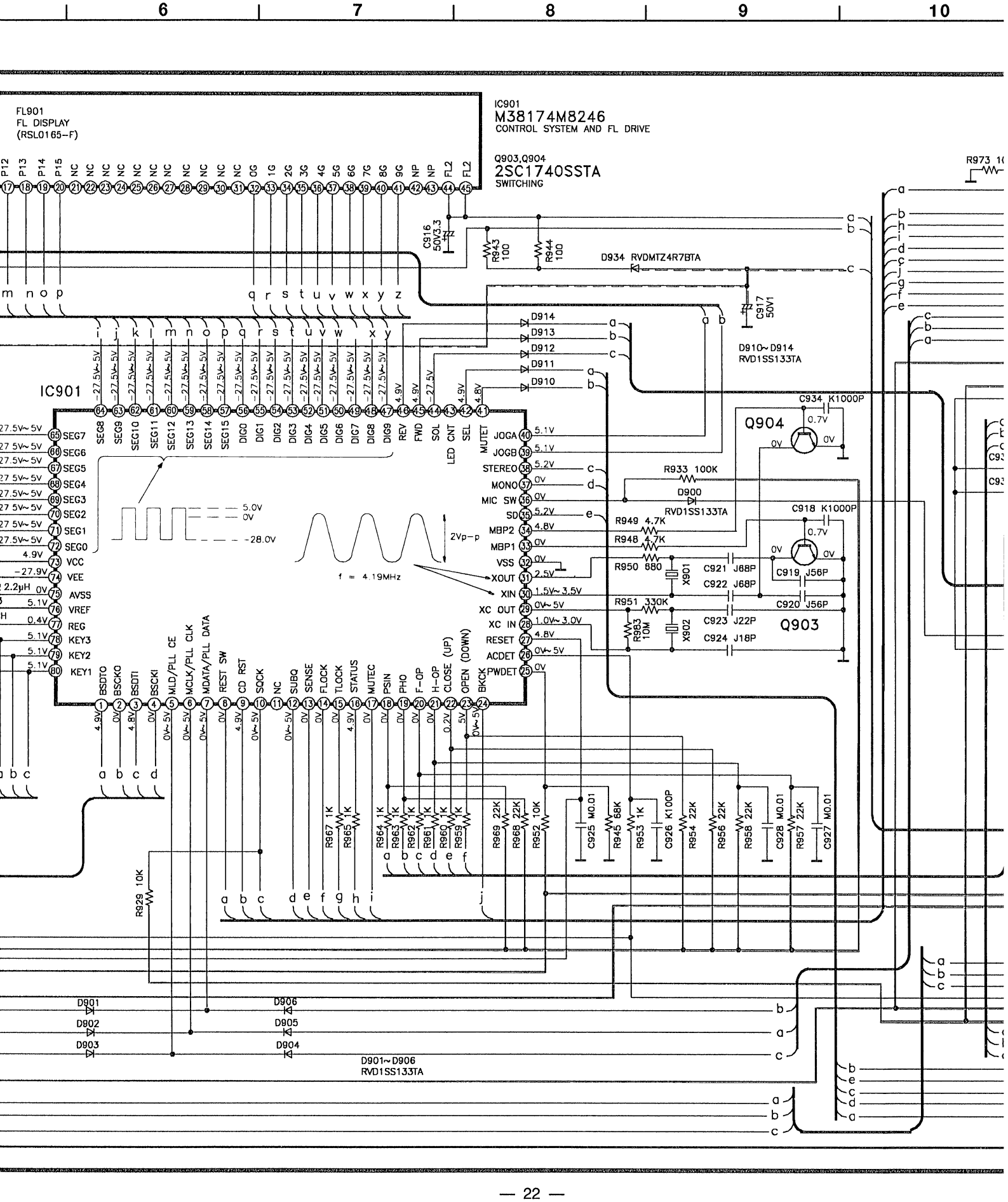
FL901
FL DISPLAY
(RSL0165-F)
IC901
M38174M8246
CONTROL SYSTEM AND FL DRIVE
Q903,Q904
2SC1740SSTA
SWITCHING
D934 RVDMTZ4R7BTA
D910~D914
RVD1SS133TA
D900
RVD1SS133TA
D901~D906
RVD1SS133TA
Q904
Q903
C934 K1000P
C918 K1000P
C919 J56P
C920 J56P
C921 J68P
C922 J68P
C923 J22P
C924 J18P
C916 50V3.3
C917 50V1
R943 100
R944 100
R933 100K
R949 4.7K
R948 4.7K
R950 680
R951 330K
R983 10M
X901
X902
R929 10K
2Vp-p
f = 4.19MHz
5.0V
0V
-28.0V

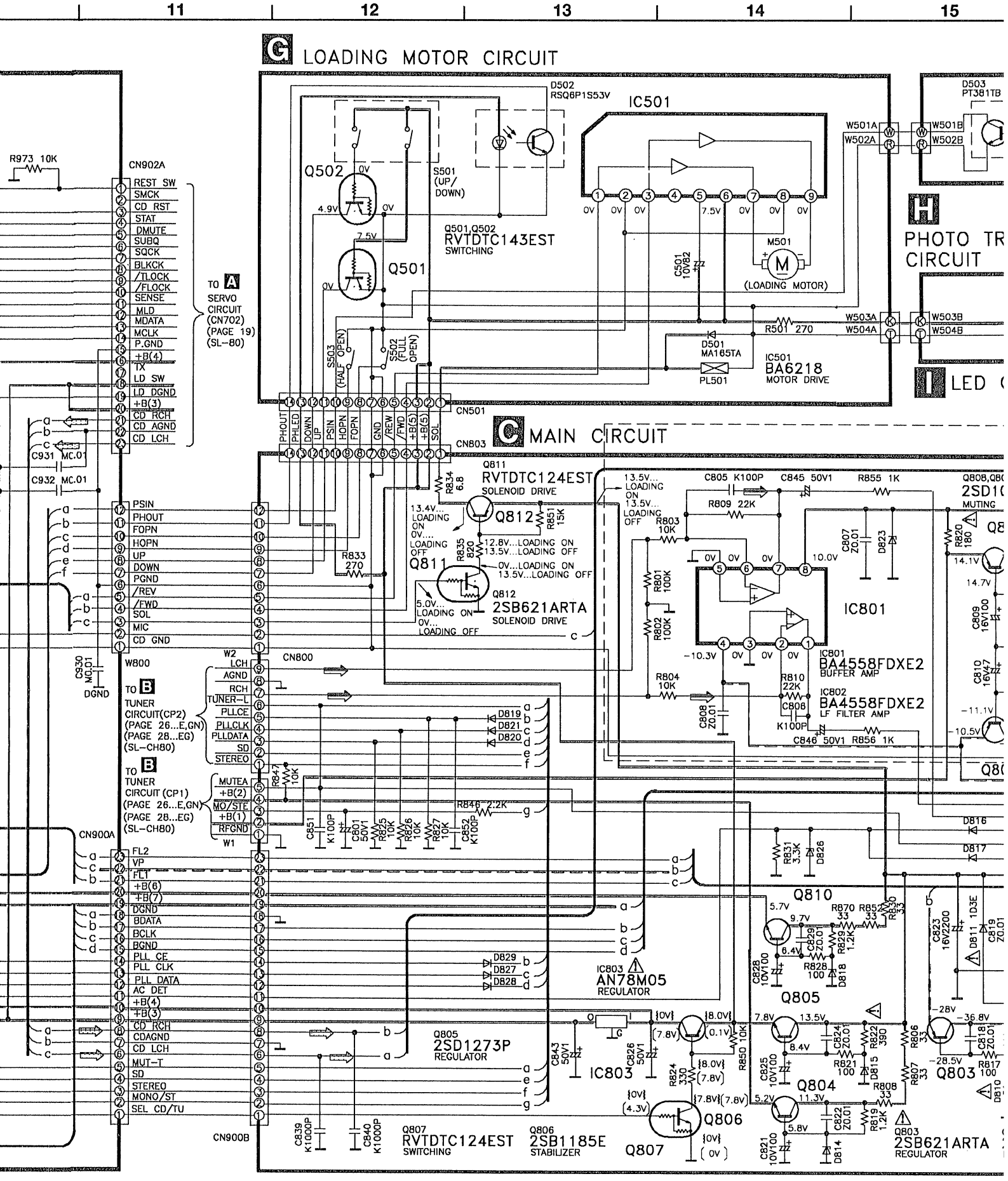
11
12
13
14
15
G LOADING MOTOR CIRCUIT
H PHOTO TR
CIRCUIT
I LED
C MAIN CIRCUIT
D502
RSQ6P1S53V
IC501
Q502
Q501
S501
(UP/
DOWN)
Q501,Q502
RVTDTC143EST
SWITCHING
M501
(LOADING MOTOR)
C501
10V82
R501 270
D501
MA165TA
PL501
IC501
BA6218
MOTOR DRIVE
D503
PT381TB
W501A
W502A
W501B
W502B
W503A
W504A
W503B
W504B
S503
(HALF OPEN)
S502
(FULL
OPEN)
CN501
CN803
PHOUT
PHLED
DOWN
UP
PSIN
HOPN
FOPN
GND
/REW
/FWD
+B(5)
+B(5)
SOL
R973 10K
CN902A
REST SW
SMCK
CD RST
STAT
DMUTE
SUBQ
SQCK
BLKCK
/TLOCK
/FLOCK
SENSE
MLD
MDATA
MCLK
P.GND
+B(4)
TX
LD SW
LD DGND
+B(3)
CD RCH
CD AGND
CD LCH
TO A
SERVO
CIRCUIT
(CN702)
(PAGE 19)
(SL-80)
C931 MC.01
C932 MC.01
PSIN
PHOUT
FOPN
HOPN
UP
DOWN
PGND
/REV
/FWD
SOL
MIC
CD GND
W800
C930
MC.01
DGND
TO B
TUNER
CIRCUIT(CP2)
(PAGE 26...E,GN)
(PAGE 28...EG)
(SL-CH80)
TO B
TUNER
CIRCUIT (CP1)
(PAGE 26...E,GN)
(PAGE 28...EG)
(SL-CH80)
W2
LCH
AGND
RCH
TUNER-L
PLLCE
PLLCLK
PLLDATA
SD
STEREO
MUTEA
+B(2)
MO/STE
+B(1)
RFGND
W1
CN800
CN900A
FL2
VP
FL1
+B(6)
+B(7)
DGND
BDATA
BCLK
BGND
PLL CE
PLL CLK
PLL DATA
AC DET
+B(4)
+B(3)
CD RCH
CDAGND
CD LCH
MUT-T
SD
STEREO
MONO/ST
SEL CD/TU
CN900B
Q811
RVTDTC124EST
SOLENOID DRIVE
R834 6.8
Q812
R851 15K
13.4V...
LOADING
ON
0V....
LOADING
OFF
R835 820
12.8V...LOADING ON
13.5V...LOADING OFF
0V...LOADING ON
13.5V...LOADING OFF
R833 270
Q812
2SB621ARTA
SOLENOID DRIVE
5.0V...
LOADING ON
0V...
LOADING OFF
13.5V...
LOADING
ON
13.5V...
LOADING
OFF
C805 K100P
C845 50V1
R855 1K
R809 22K
R803 10K
R801 100K
R802 100K
R804 10K
C808 Z0.01
C807 Z0.01
D823
IC801
IC801
BA4558FDXE2
BUFFER AMP
IC802
BA4558FDXE2
LF FILTER AMP
R810 22K
C806 K100P
C846 50V1
R856 1K
Q808,Q80
2SD1
MUTING
R820 180
C809 16V100
C810 16V47
D819
D821
D820
R847 10K
R846 2.2K
C851 K100P
C801 50V1
R825 10K
R826 10K
R827 10K
C852 K100P
D816
D817
R831 3.3K
D826
Q810
R870 33
R852 33
R830 33
C829 Z0.01
R829 1.2K
C828 10V100
R828 100
D818
Q805
C823 16V2200
D811 1D3E
C819 Z0.01
D829
D827
D828
IC803
AN78M05
REGULATOR
Q805
2SD1273P
REGULATOR
C843 50V1
C826 50V1
IC803
R850 10K
R824 330
Q806
Q807
Q804
C824 Z0.01
R822 390
R821 100
D815
C825 10V100
R806 33
R807 33
R808 33
Q803
C818 Z0.01
R817 100
C822 Z0.01
R819 1.2K
C821 10V100
D814
Q803
2SB621ARTA
REGULATOR
C839 K1000P
C840 K1000P
Q807
RVTDTC124EST
SWITCHING
Q806
2SB1185E
STABILIZER

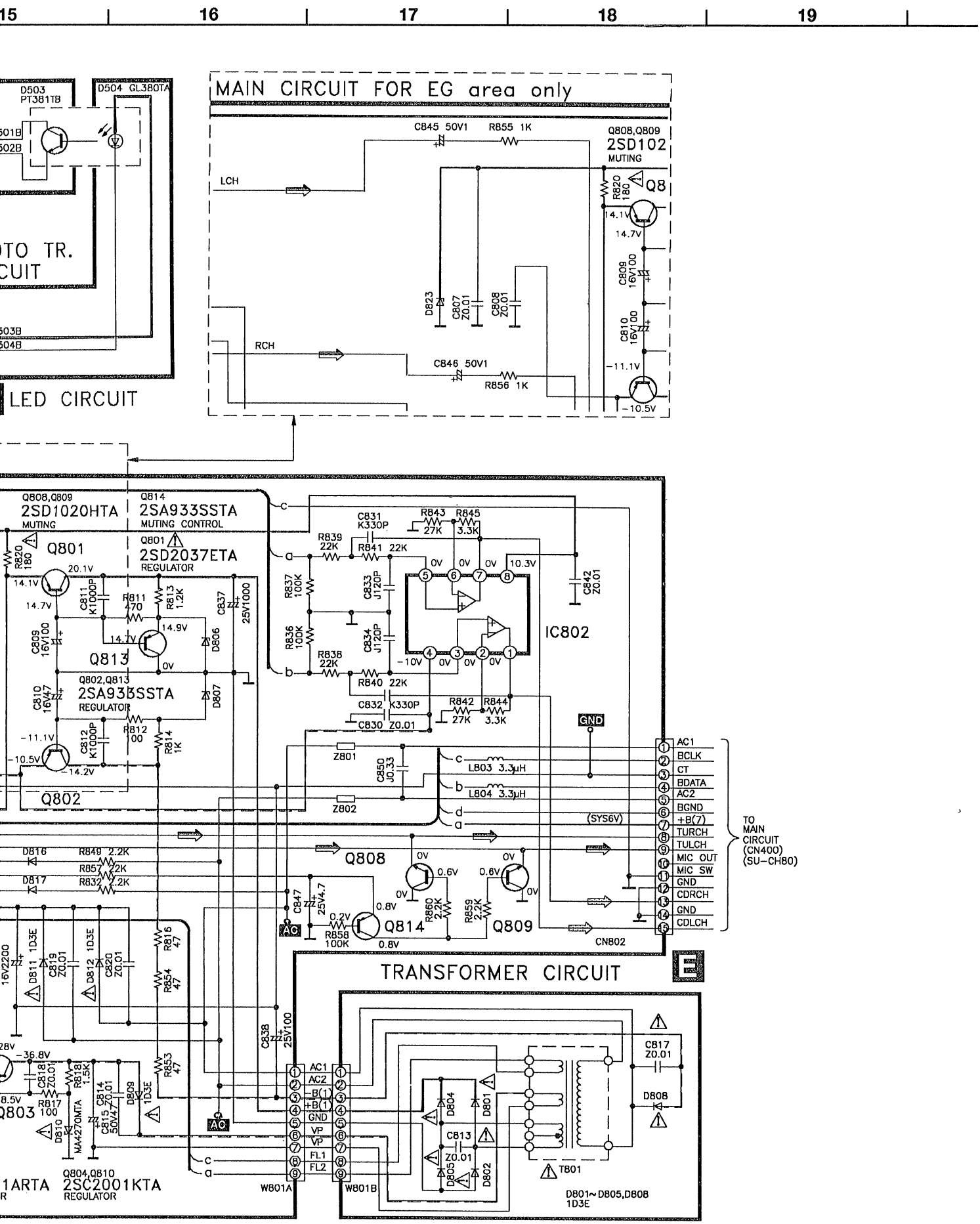
15
16
17
18
19
MAIN CIRCUIT FOR EG area only
LED CIRCUIT
TRANSFORMER CIRCUIT
TO MAIN CIRCUIT (CN400) (SU-CH80)
IC802
Q808,Q809 2SD102 MUTING
Q808,Q809 2SD1020HTA MUTING
Q814 2SA933SSTA MUTING CONTROL
Q801 2SD2037ETA REGULATOR
Q802,Q813 2SA933SSTA REGULATOR
Q804,Q810 2SC2001KTA REGULATOR
Q803
Q808
Q814
Q809
Q813
Q802
Q801
Q8
CN802
W801A
W801B
T801
D801~D805,D808 1D3E
AC1
BCLK
CT
BDATA
AC2
BGND
+B(7)
TURCH
TULCH
MIC OUT
MIC SW
GND
CDRCH
GND
CDLCH
(SYS6V)
GND
E

SCHEMATIC DIAGRAM

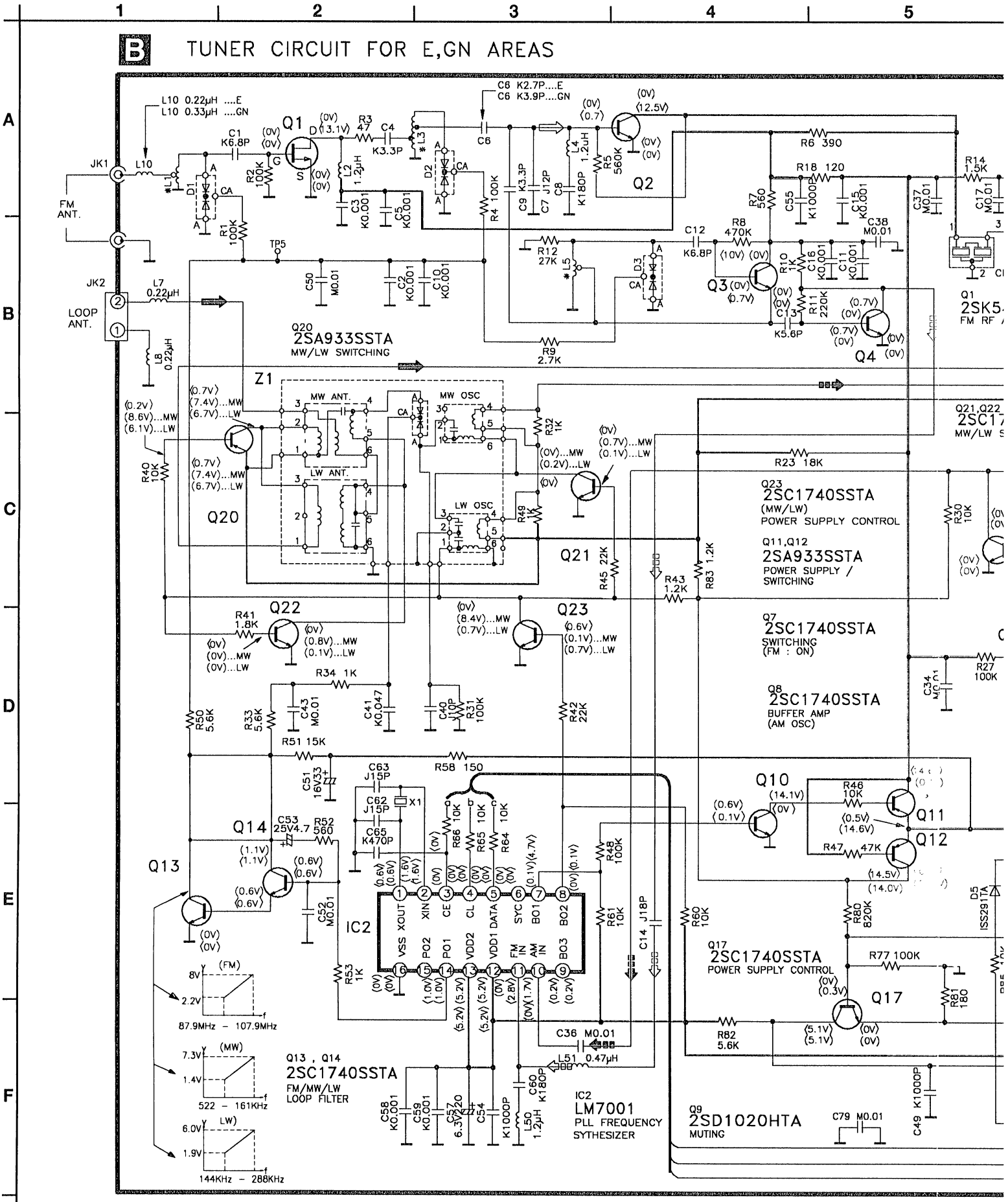

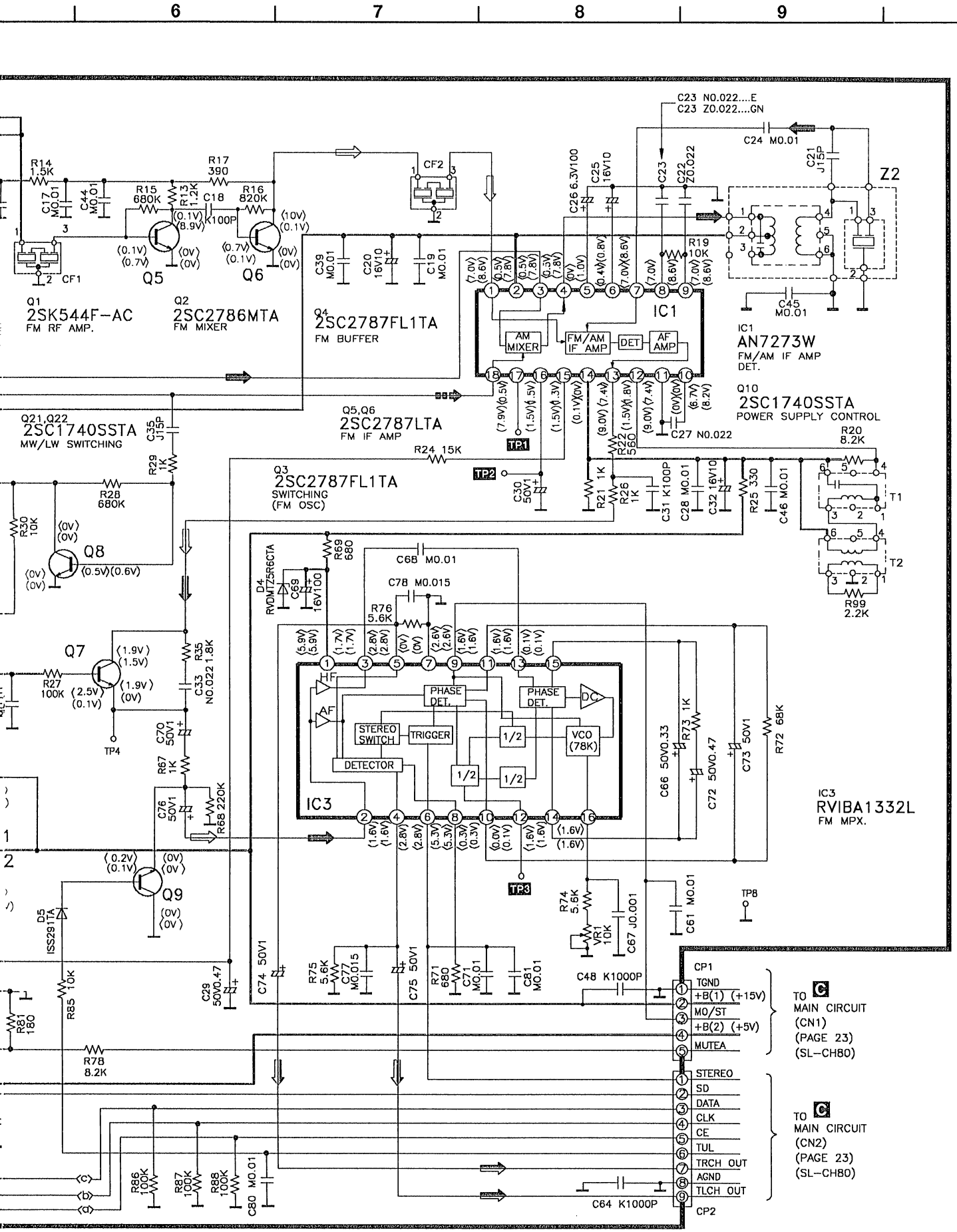
6
7
8
9
10
Q1
2SK544F-AC
FM RF AMP.
Q2
2SC2786MTA
FM MIXER
Q4
2SC2787FL1TA
FM BUFFER
IC1
AN7273W
FM/AM IF AMP
DET.
Q10
2SC1740SSTA
POWER SUPPLY CONTROL
Q21,Q22
2SC1740SSTA
MW/LW SWITCHING
Q5,Q6
2SC2787LTA
FM IF AMP
Q3
2SC2787FL1TA
SWITCHING
(FM OSC)
IC3
RVIBA1332L
FM MPX.
TO C
MAIN CIRCUIT
(CN1)
(PAGE 23)
(SL-CH80)
TO C
MAIN CIRCUIT
(CN2)
(PAGE 23)
(SL-CH80)

10 | 11 | 12 | 13 | 14

B

TUNER CIRCUIT FOR EG AREA ONLY

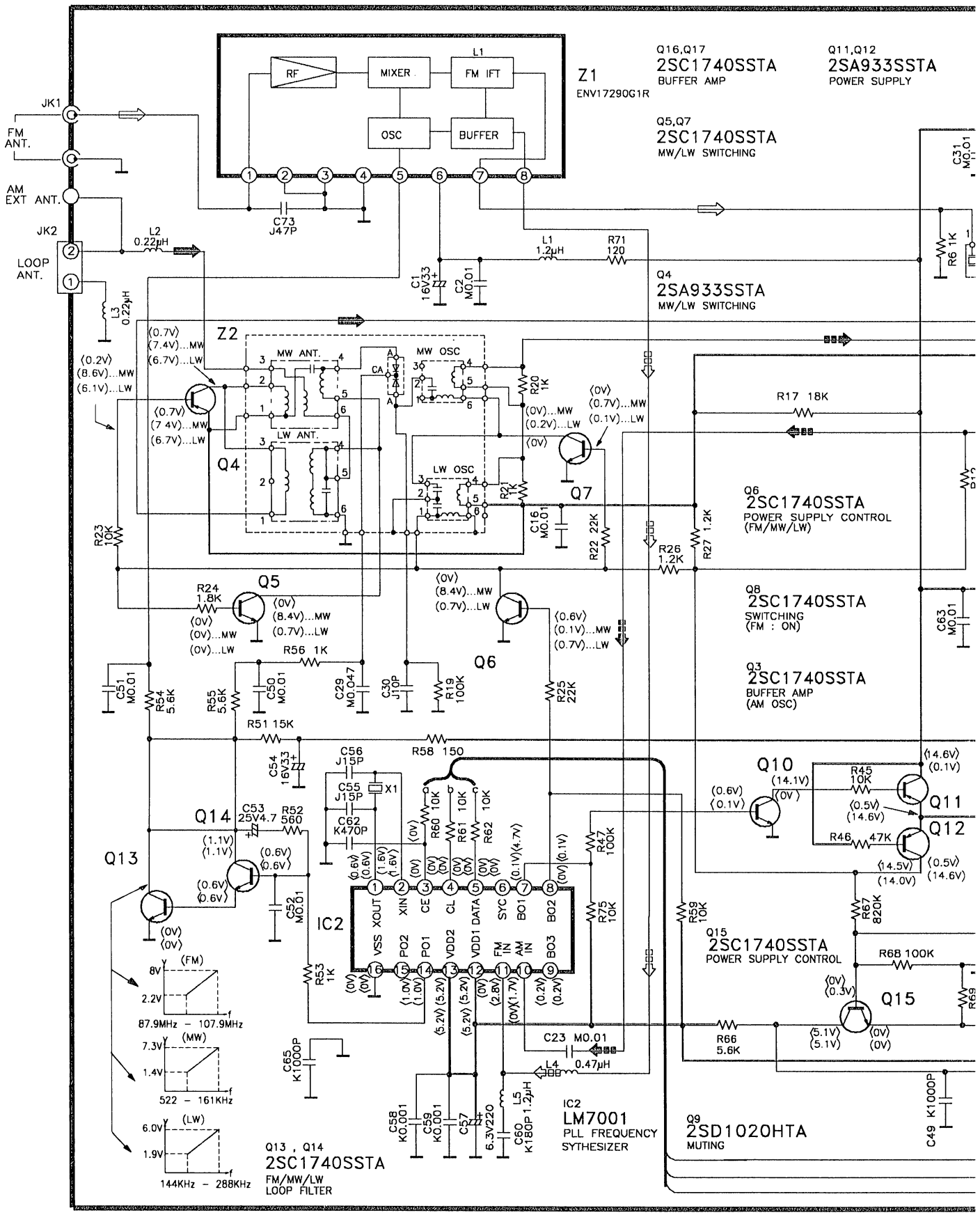

15 | 16 | 17 | 18 | 19

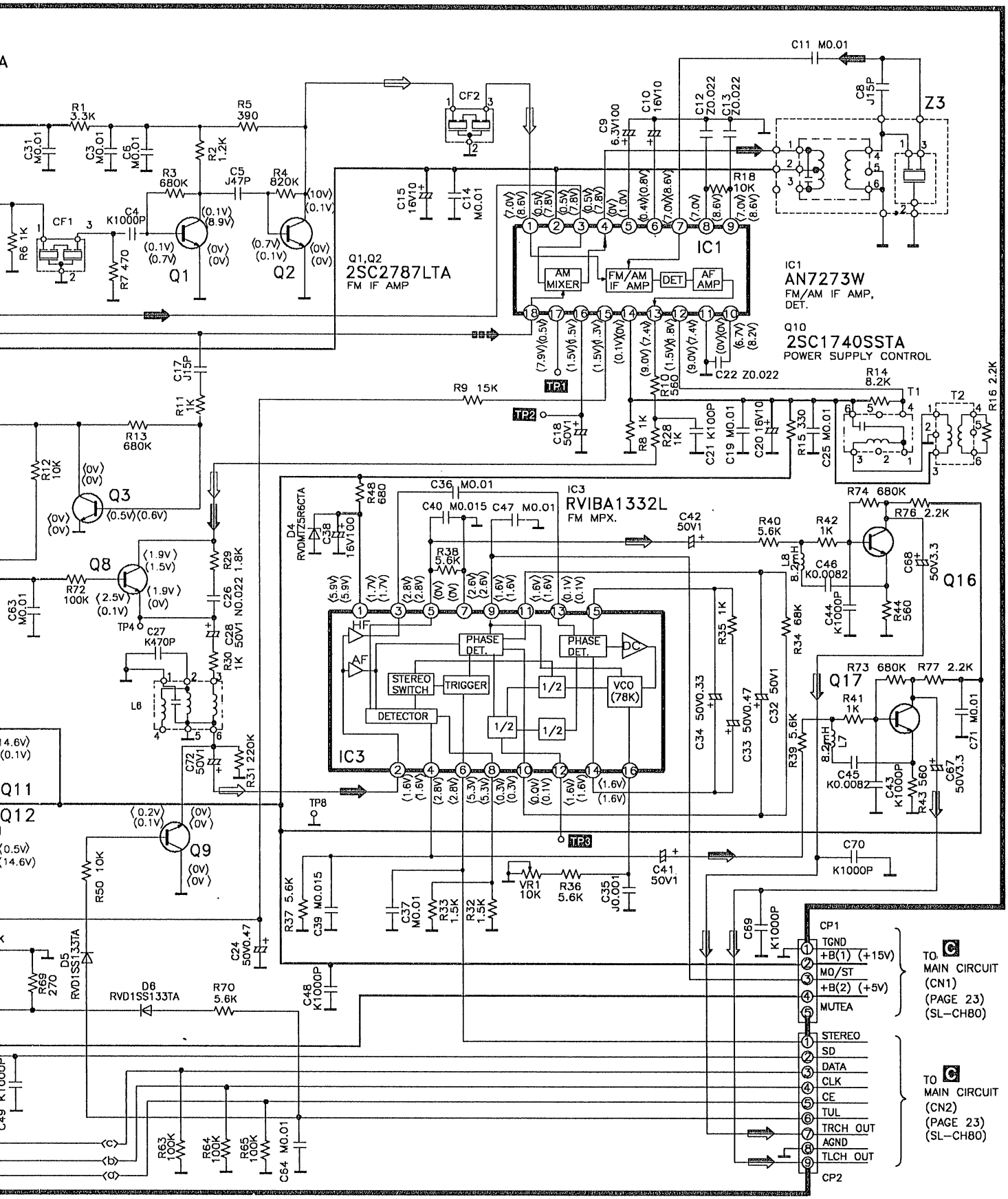
IC1
AN7273W
FM/AM IF AMP, DET.
Q1,Q2
2SC2787LTA
FM IF AMP
Q10
2SC1740SSTA
POWER SUPPLY CONTROL
IC3
RVIBA1332L
FM MPX.
AM MIXER
FM/AM IF AMP
DET
AF AMP
PHASE DET.
STEREO SWITCH
TRIGGER
VCO (78K)
DETECTOR
TO C MAIN CIRCUIT (CN1) (PAGE 23) (SL-CH80)
TO C MAIN CIRCUIT (CN2) (PAGE 23) (SL-CH80)
CP1
TGND
+B(1) (+15V)
MO/ST
+B(2) (+5V)
MUTEA
CP2
STEREO
SD
DATA
CLK
CE
TUL
TRCH OUT
AGND
TLCH OUT

NOTES:

< For TUNER CIRCUIT >

- VR1 : FM stereo adjustment

- The voltage value and waveforms are the reference voltage of this unit measured by DC electronic voltmeter (high impedance) and oscilloscope on the basis of chassis.
  Accordingly, there may arise some error in voltage values and waveforms depending upon the internal impedance of the tester or the measuring unit.

  < For Tuner circuit >

  No mark ... Tape playback < >... FM ( ) ... MW/LW

CAUTION !
IC and LSI are sensitive to static electricity.
Secondary trouble can be prevented by taking care during repair.
- Cover the parts boxes made of plastics with aluminum foil.
- Ground the soldering iron.
- Put a conductive mat on the work table.
- Do not touch the pins of IC or LSI with fingers directly.

- Important safety notice :
  Components identified by ⚠ mark have special characteristics important for safety.
  When replacing any of these components, use only manufacturer's specified parts.

- **This schematic diagram may be modified at anytime with the development of new technology.**

... + B LINE
... FM SIGNAL LINE
... MW/LW SIGNAL LINE
... MW/LW OSC SIGNAL LINE
... FM OSC SIGNAL LINE
... FM/MW/LW SIGNAL LINE

■ DIGITAL SERVO SYSTEM

DIGITAL SERVO SYSTEM

This servo system has no adjustment VRs.

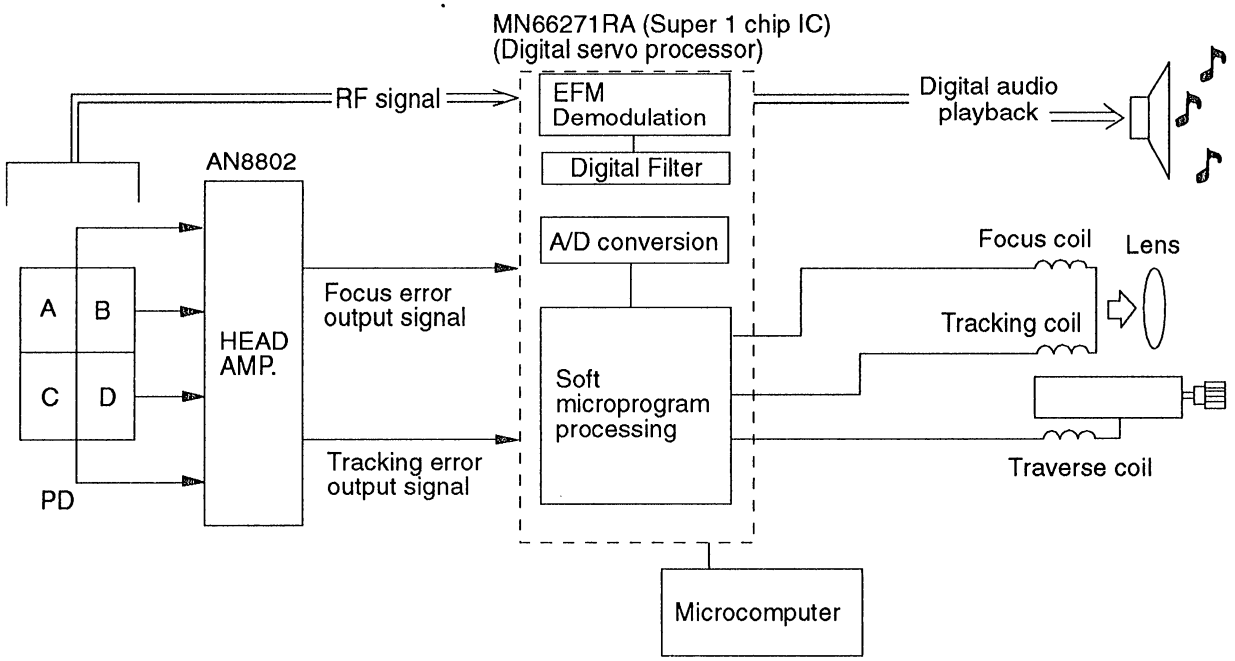

The following flow chart shows the sequence of automatic adjustments.

- **Flow chart on automatic adjustment sequence**

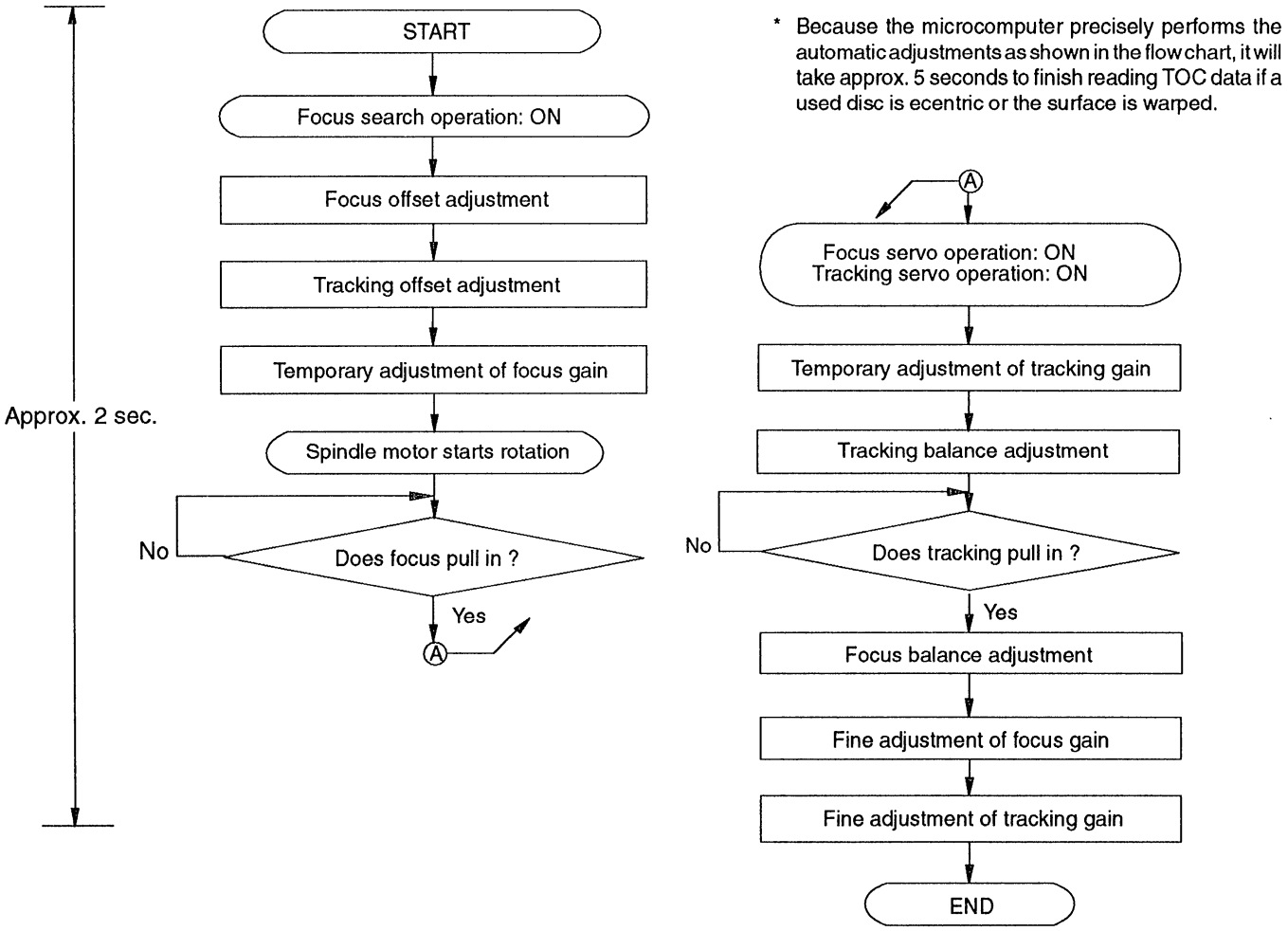

* Because the microcomputer precisely performs the automatic adjustments as shown in the flow chart, it will take approx. 5 seconds to finish reading TOC data if a used disc is ecentric or the surface is warped.

■ PRINTED CIRCUIT BOARD

A SERVO P.C.B. (REP1650A-N)

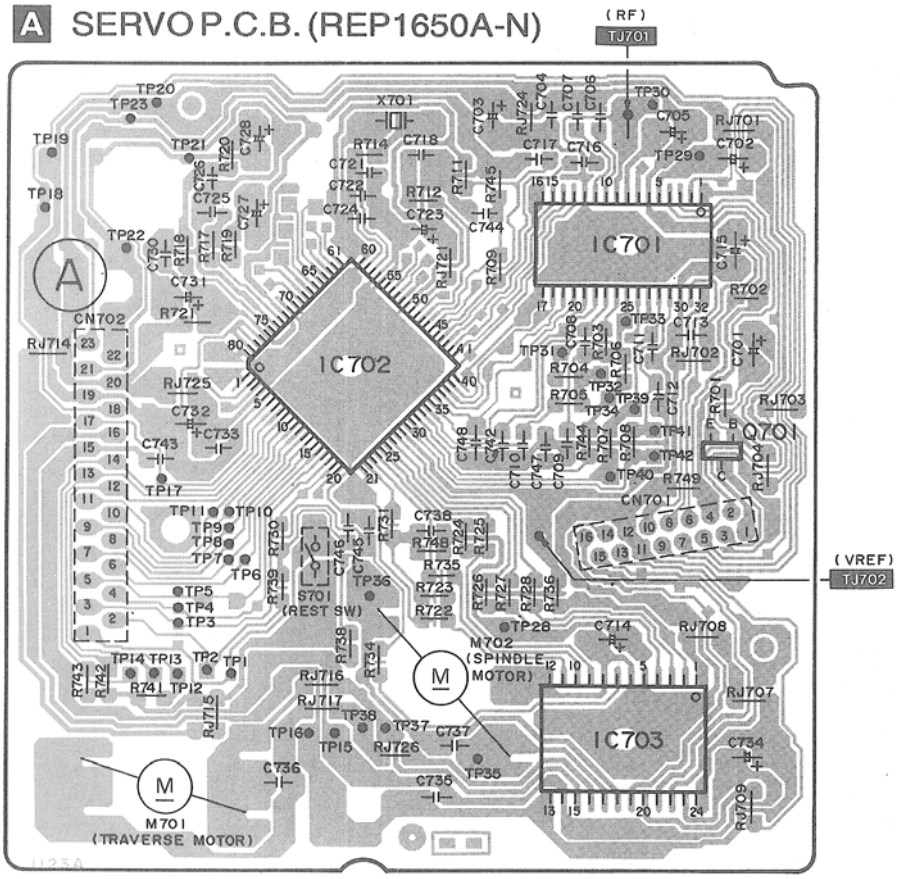

D PANEL P.C.B. (REP1836

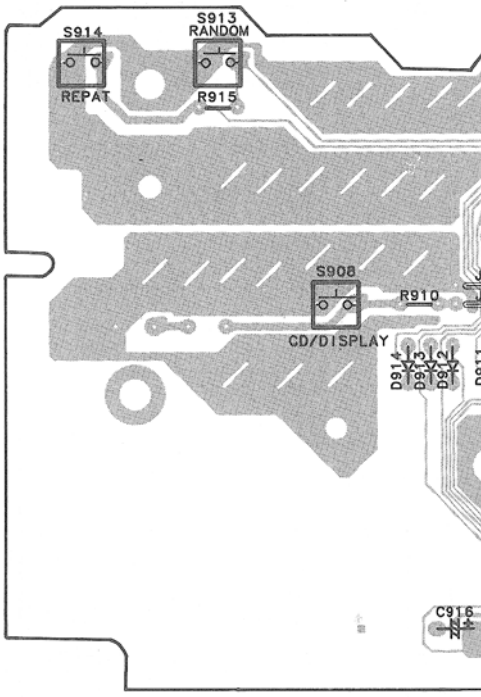

F OPERATION P.C.B. (REP1836D)

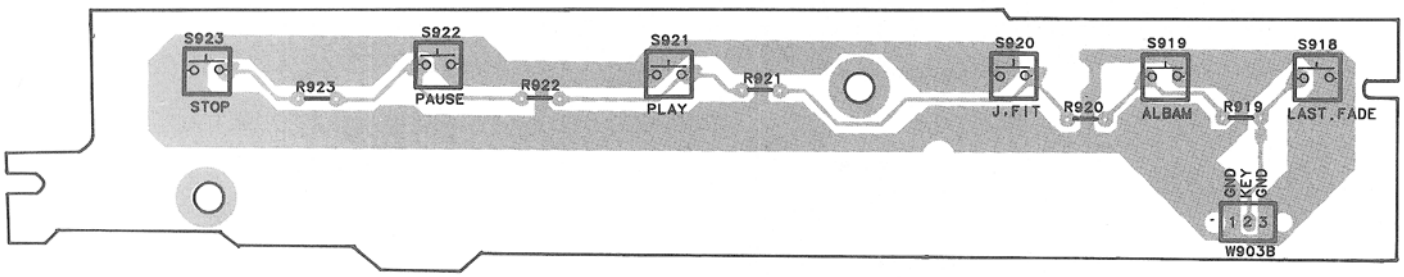

6 7 8 9 10

EP1836D)

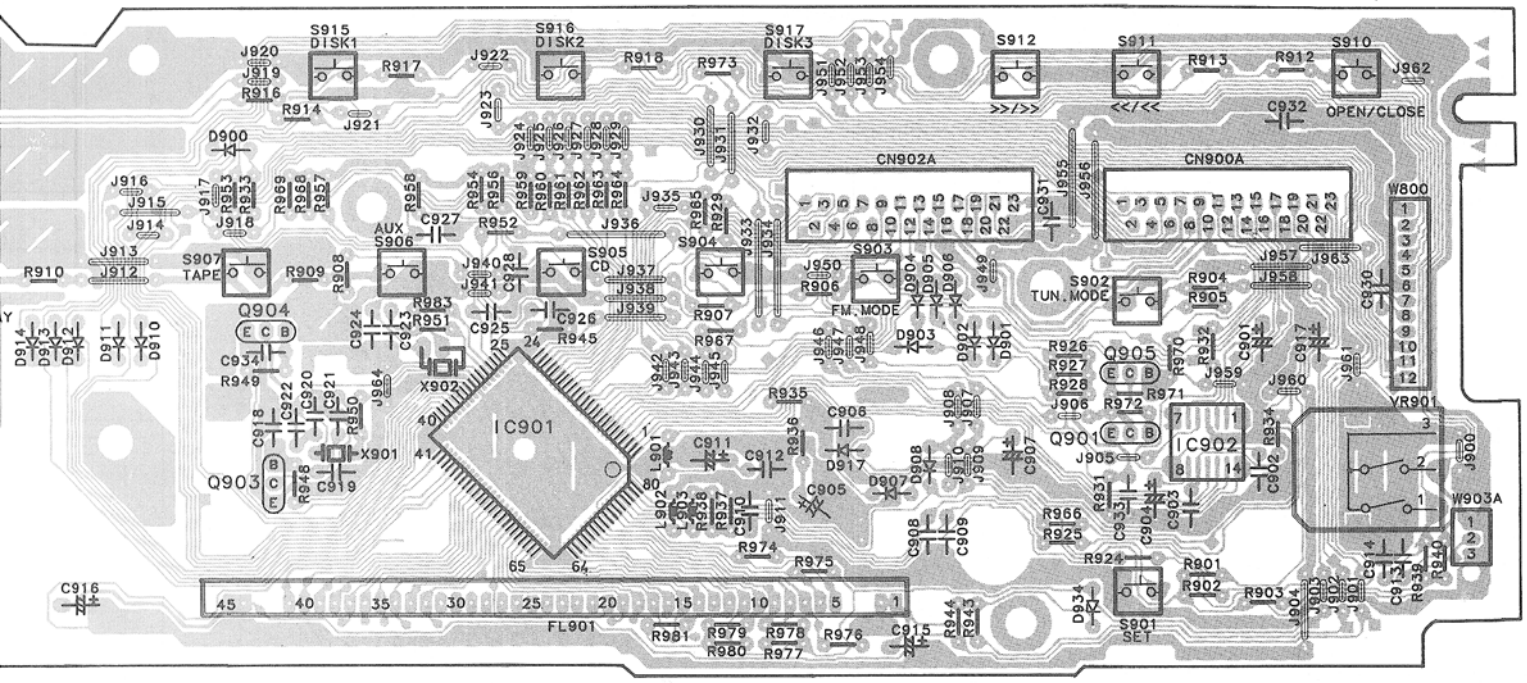

C MAIN P.C.B. (REP1838B ... E, GN)
(REP1838C ... EG)

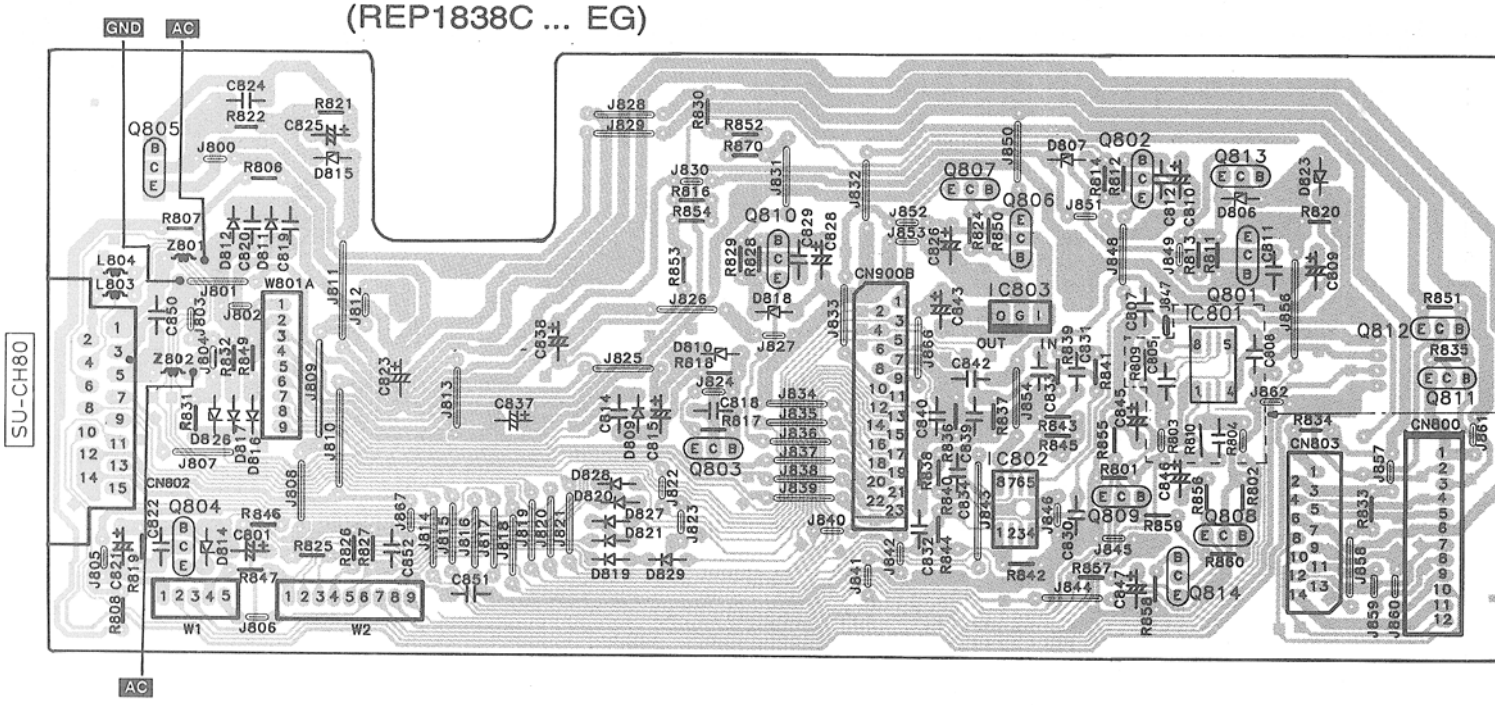

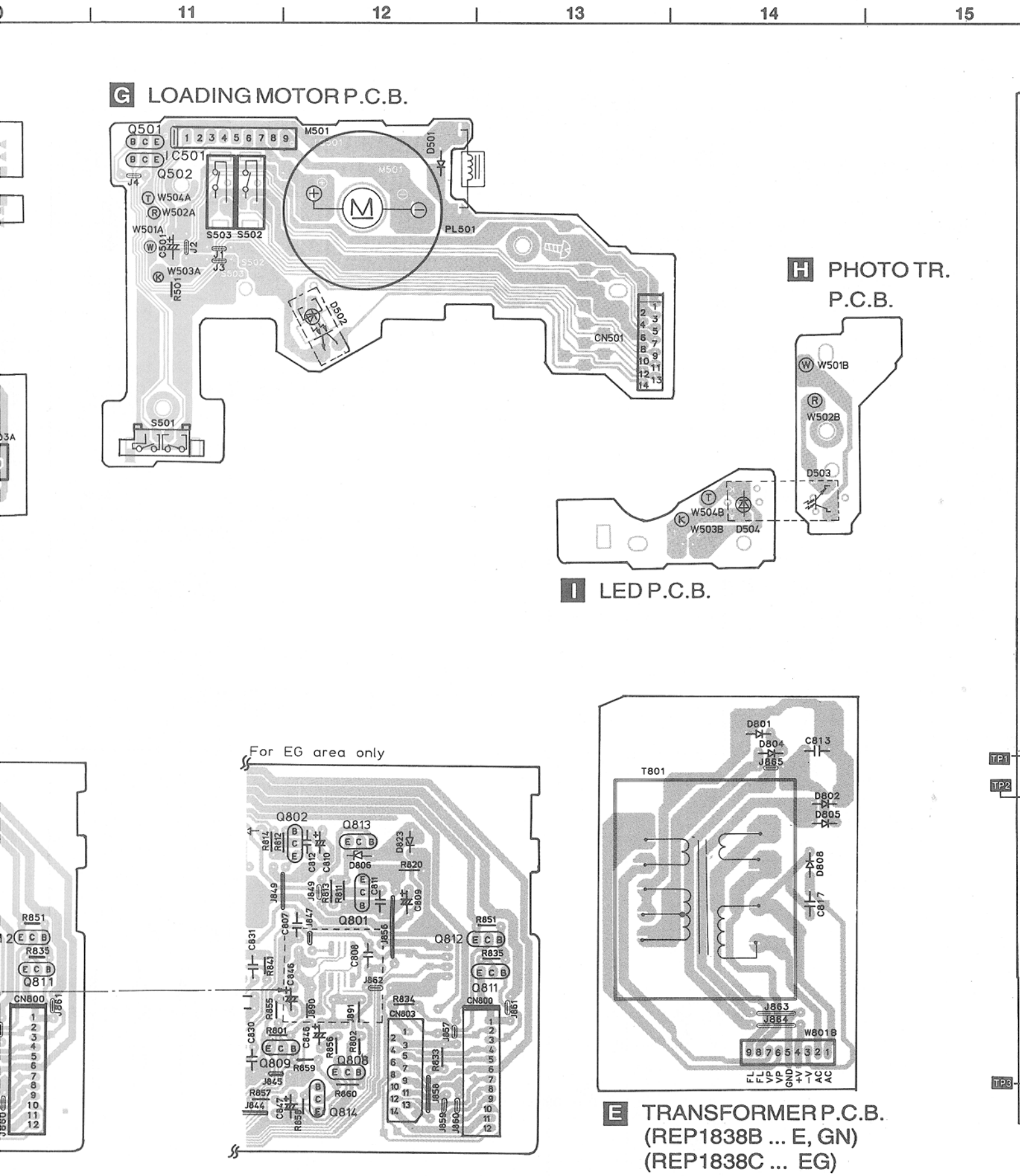
11
12
13
14
15
G LOADING MOTOR P.C.B.
Q501
C501
Q502
M501
D501
W504A
W502A
W501A
S503 S502
PL501
W503A
D502
CN501
S501
H PHOTO TR. P.C.B.
W501B
W502B
D503
W504B
W503B
D504
I LED P.C.B.
For EG area only
Q802
Q813
Q801
Q812
Q811
Q809
Q808
Q814
CN800
CN803
T801
D801
D804
D802
D805
D808
C813
C817
J865
J863
J864
W801B
FL FL VP VP GND +V -V AC AC
E TRANSFORMER P.C.B.
(REP1838B ... E, GN)
(REP1838C ... EG)

15 16 17 18 19

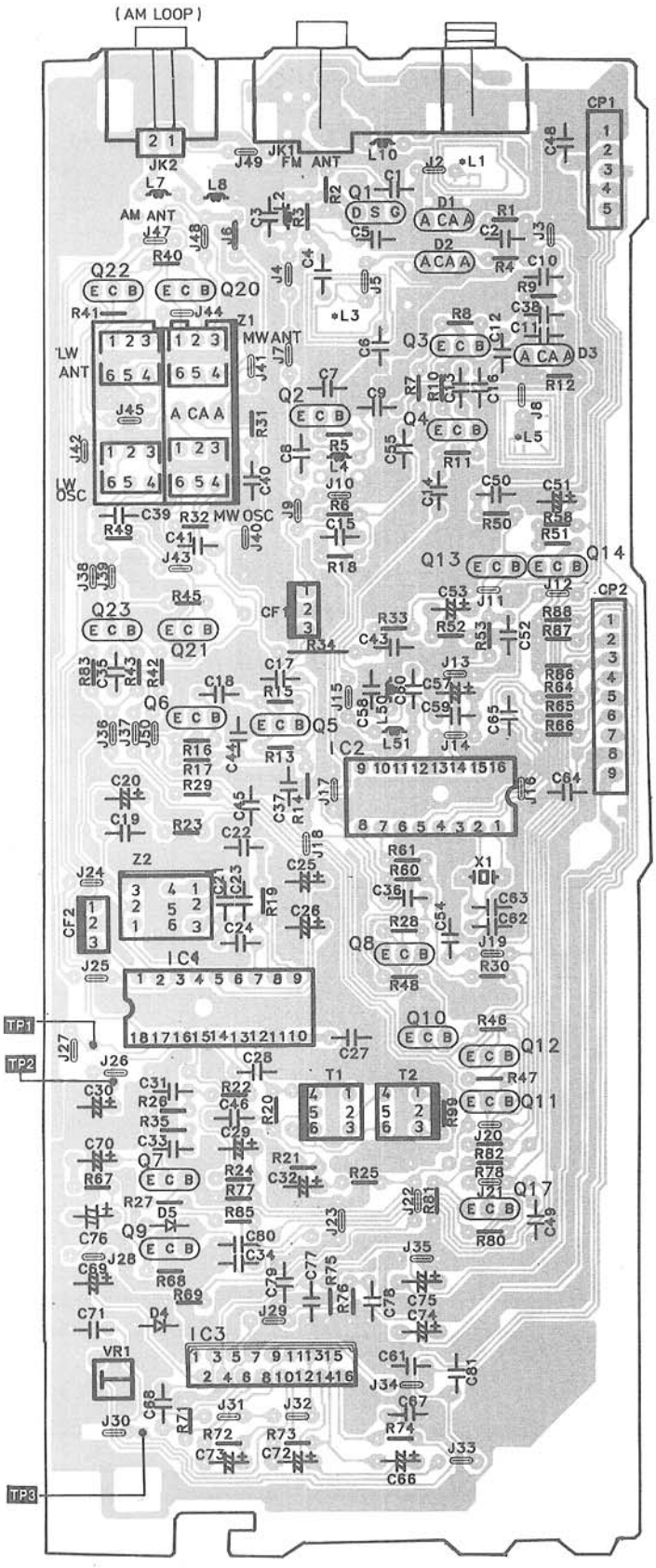

B TUNER P.C.B. (REP1548C ... E)
(REP1548D ... GN)

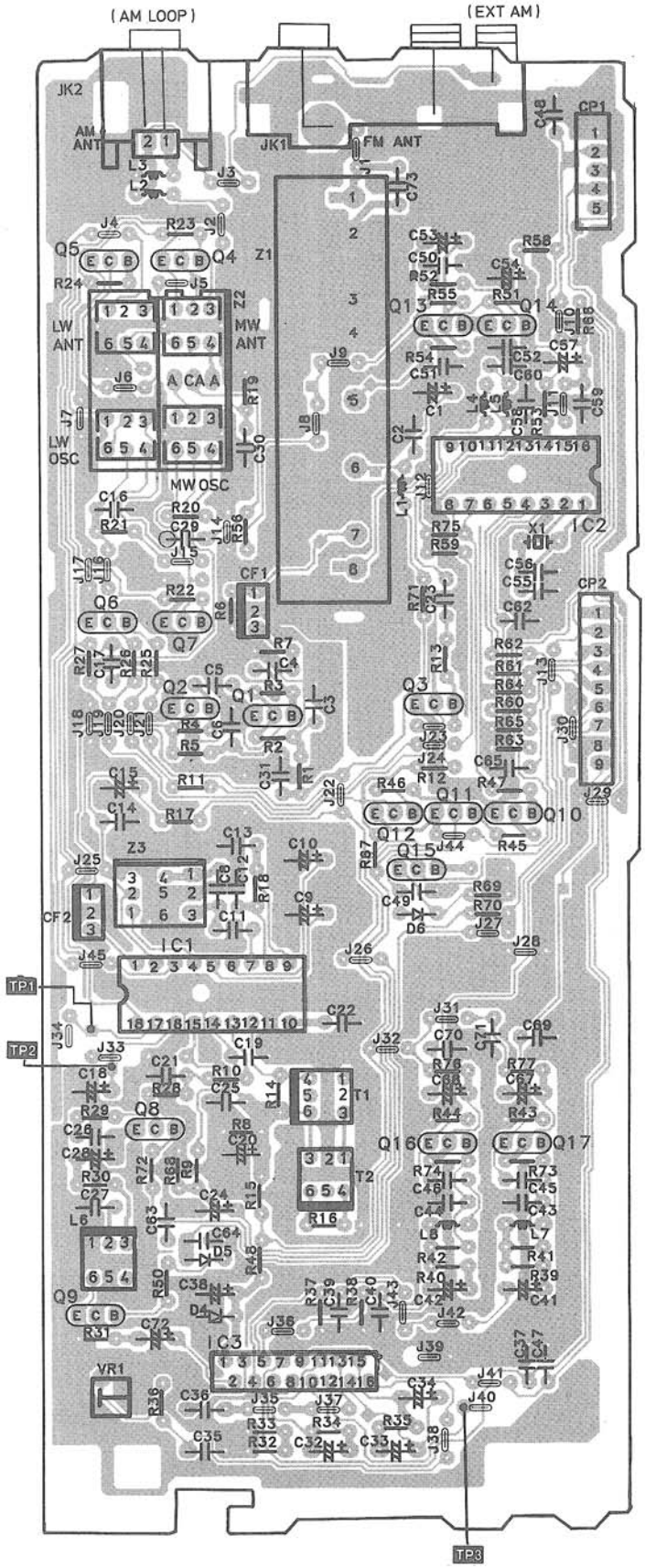

B TUNER P.C.B. (REP1839A ... EG)

BLOCK DIAGRAM

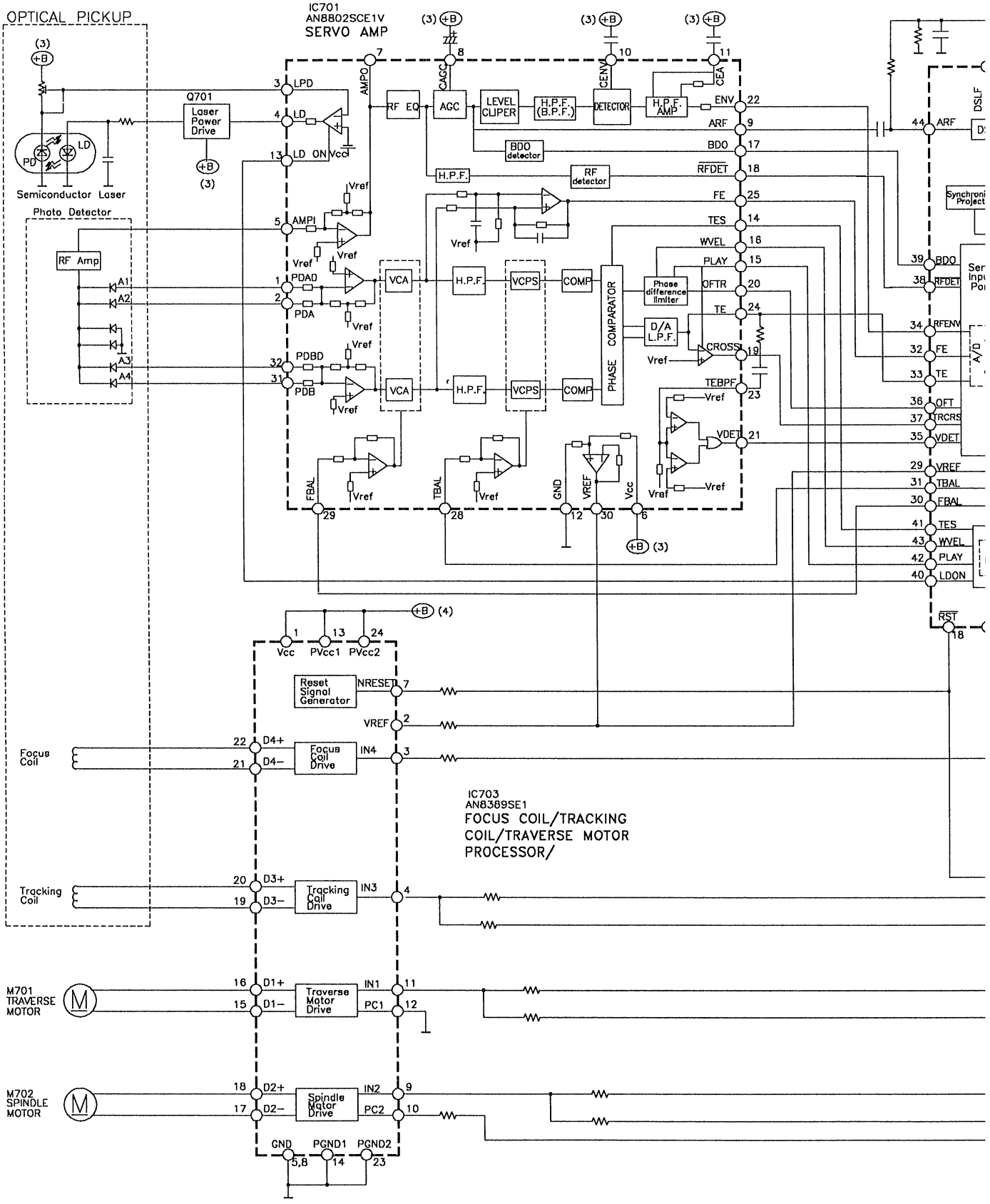

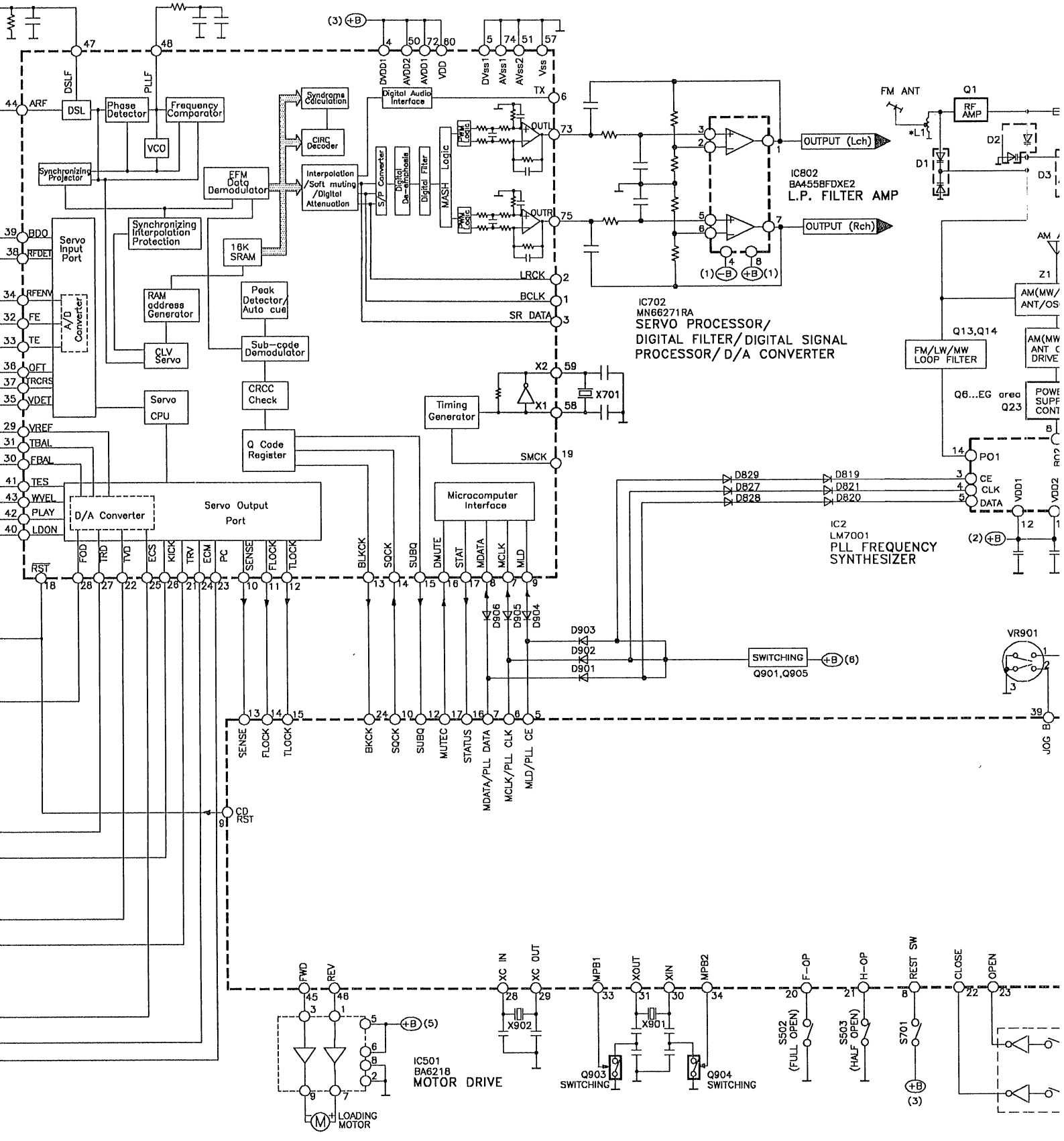
IC702
MN66271RA
SERVO PROCESSOR/
DIGITAL FILTER/DIGITAL SIGNAL
PROCESSOR/D/A CONVERTER
IC802
BA4558FDXE2
L.P. FILTER AMP
OUTPUT (Lch)
OUTPUT (Rch)
FM ANT
RF AMP
Q1
Q13,Q14
FM/LW/MW LOOP FILTER
Q6...EG area
Q23
IC2
LM7001
PLL FREQUENCY
SYNTHESIZER
SWITCHING
Q901,Q905
VR901
IC501
BA6218
MOTOR DRIVE
LOADING MOTOR
Q903 SWITCHING
Q904 SWITCHING
S502 (FULL OPEN)
S503 (HALF OPEN)
S701
Servo Input Port
A/D Converter
Servo CPU
D/A Converter
Servo Output Port
Microcomputer Interface
Timing Generator
Q Code Register
CRCC Check
Sub-code Demodulator
Peak Detector/ Auto cue
RAM address Generator
CLV Servo
16K SRAM
Synchronizing Interpolation Protection
Synchronizing Projector
EFM Data Demodulator
Interpolation /Soft muting /Digital Attenuation
Syndrome Calculation
CIRC Decoder
Digital Audio Interface
S/P Converter
Digital De-emphasis
Digital Filter
MASH Logic
PWM Logic
Phase Detector
Frequency Comparator
VCO
DSL
DSLF
PLLF
ARF
BDO
RFDET
RFENV
FE
TE
OFT
TRCRS
VDET
VREF
TBAL
FBAL
TES
WVEL
PLAY
LDON
RST
FOD
TRD
TVD
ECS
KICK
TRV
ECM
PC
SENSE
FLOCK
TLOCK
BLKCK
SQCK
SUBQ
DMUTE
STAT
MDATA
MCLK
MLD
MUTEC
STATUS
MDATA/PLL DATA
MCLK/PLL CLK
MLD/PLL CE
CD RST
FWD
REV
XC IN
XC OUT
MPB1
XOUT
XIN
MPB2
F-OP
H-OP
REST SW
CLOSE
OPEN
X902
X901
X701
X2
X1
SMCK
LRCK
BCLK
SR DATA
TX
OUTL
OUTR
DVDD1
AVDD2
AVDD1
VDD
DVss1
AVss1
AVss2
Vss
D829
D827
D828
D819
D821
D820
D903
D902
D901
D906
D905
D904
PO1
CE
CLK
DATA
VDD1
VDD2
JOG B
Z1
AM(MW/ ANT/OS
AM(MW ANT C DRIVE
POWE SUPP CONT
(3) +B
(2) +B
(1) -B
+B (1)
+B (6)
+B (5)
+B (3)

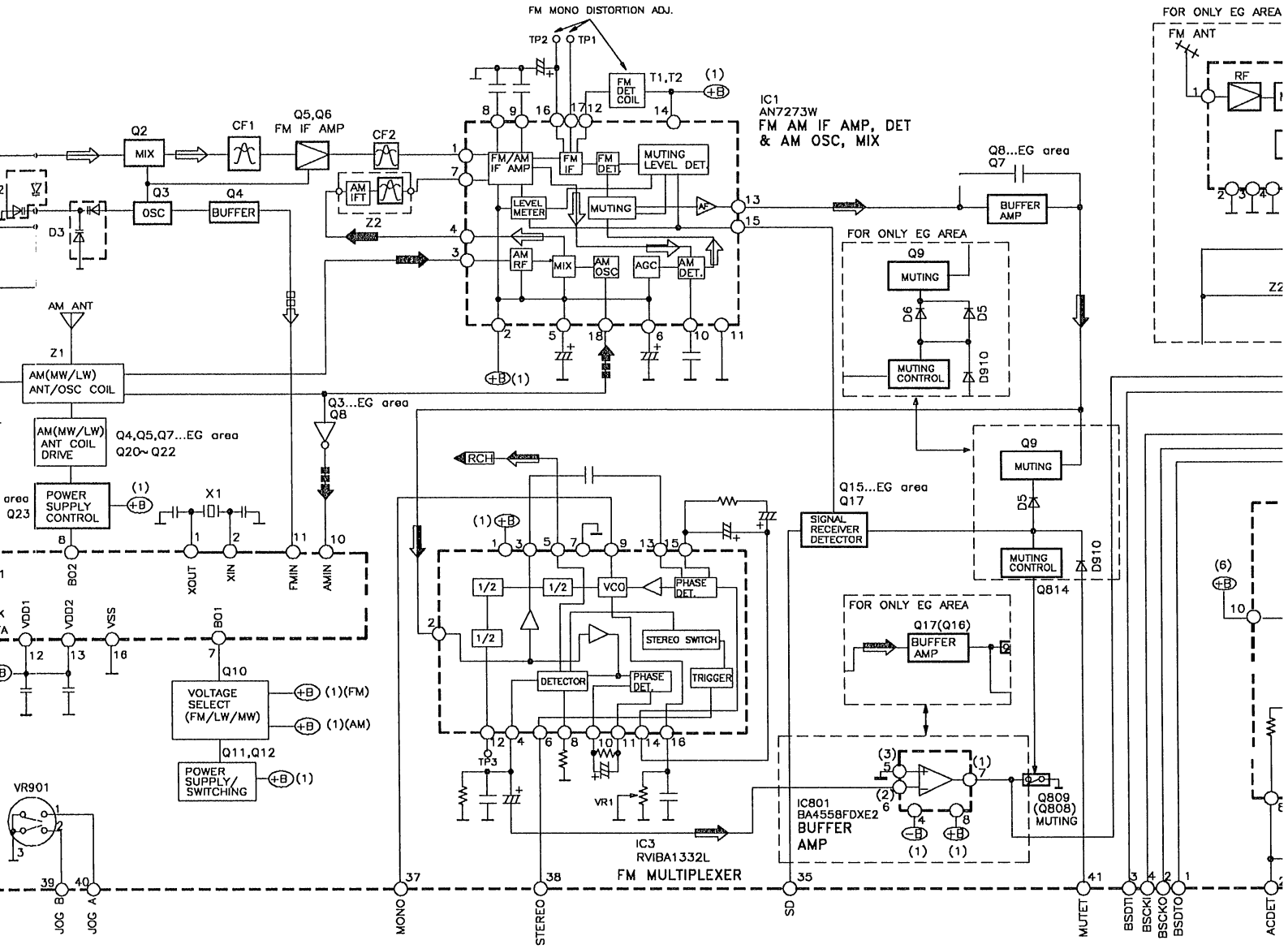

IC901
M38174M8246
SYSTEM CONTROL & FL DRIVE

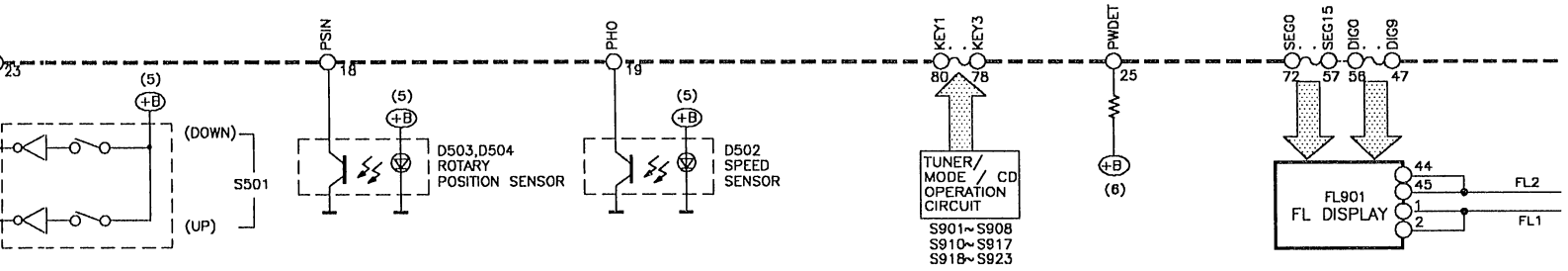

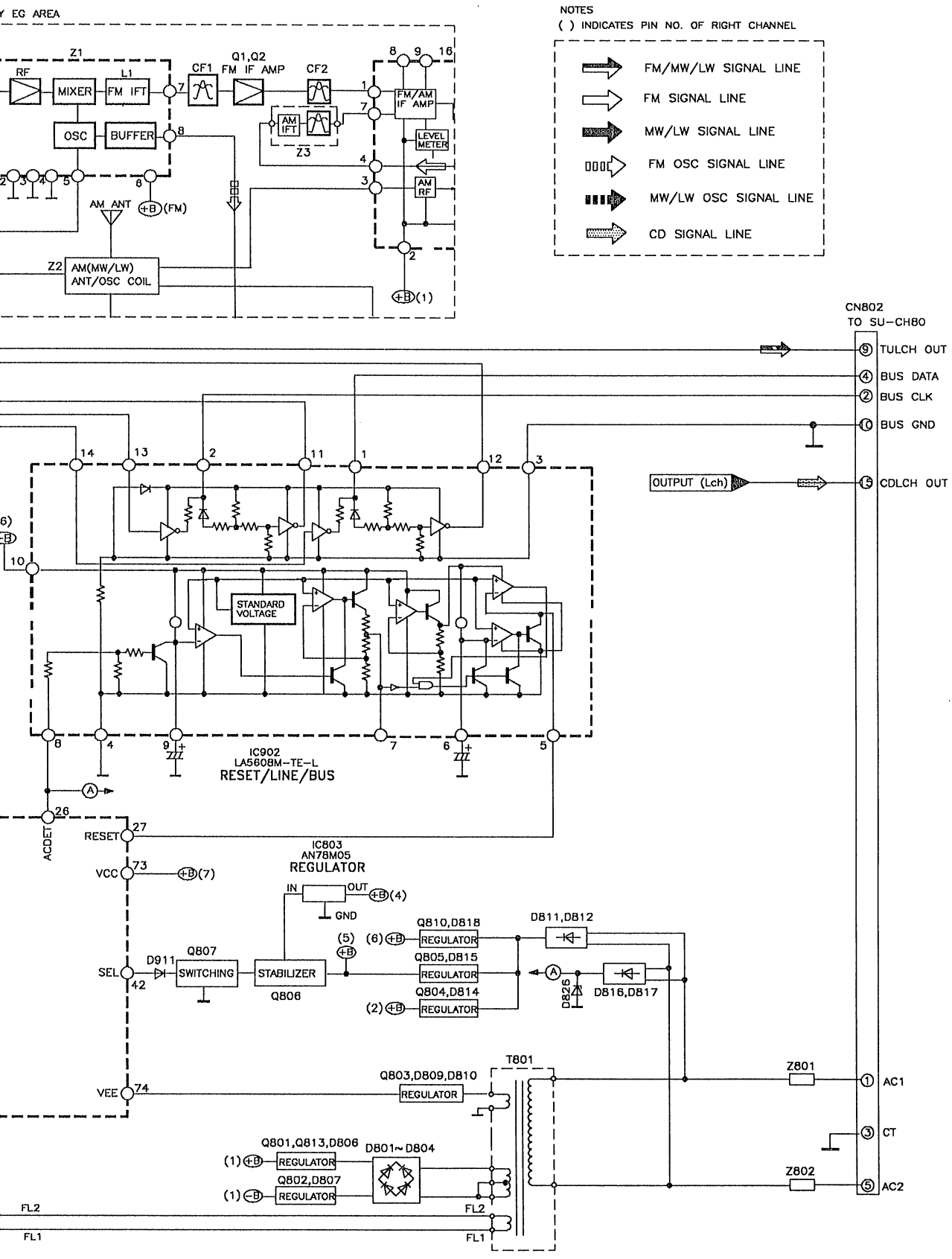
Y EG AREA
Z1
RF
MIXER
L1
FM IFT
OSC
BUFFER
CF1
Q1,Q2
FM IF AMP
CF2
AM IFT
Z3
FM/AM IF AMP
LEVEL METER
AM RF
AM ANT
(FM)
Z2
AM(MW/LW) ANT/OSC COIL
(1)
NOTES
( ) INDICATES PIN NO. OF RIGHT CHANNEL
FM/MW/LW SIGNAL LINE
FM SIGNAL LINE
MW/LW SIGNAL LINE
FM OSC SIGNAL LINE
MW/LW OSC SIGNAL LINE
CD SIGNAL LINE
CN802
TO SU-CH80
TULCH OUT
BUS DATA
BUS CLK
BUS GND
OUTPUT (Lch)
CDLCH OUT
STANDARD VOLTAGE
IC902
LA5608M-TE-L
RESET/LINE/BUS
ACDET
RESET
IC803
AN78M05
REGULATOR
VCC
IN
OUT
GND
(4)
(7)
Q810,D818
Q805,D815
Q804,D814
REGULATOR
D811,D812
D816,D817
D826
(5)
(6)
(2)
Q807
D911
SEL
SWITCHING
STABILIZER
Q806
T801
Q803,D809,D810
VEE
Z801
Z802
AC1
CT
AC2
Q801,Q813,D806
Q802,D807
D801~D804
FL2
FL1

GENERAL INSPECTION

FUNCTION	CHECKING	REMARKS
1. To enter TEST MODE.	• Press the "CD" key to select CD position. • Press the " □ " (CD STOP) key on the SL-CH80 unit, then simultaneously press the "REPEAT" key on the SL-CH80 unit for about 2 seconds.	• All segments of FL display will light up.
2. To check for all connection and FL Display connection.	• Press the "CD DISPLAY" key on the SL-CH80 unit. • Press every key(except "CD DISPLAY" and "SET" keys) on the SL-CH80 unit one by one . • The chart below summarizes the Display segment corresponding to each key pressed.	• FL Display will black out. • FL Display will have its segment lighted up one by one.
3. To check for tuner auto tuning.	• Press the "TUNER/BAND" key to select "TUNER" position. • Press the " □ " (CD STOP) key on the SL-CH80 unit, then simultaneously press the "TUNER/BAND" key for about 2 seconds. • Press the " ⏮/◀◀ " or " ▶▶/▶▶⏭ " on the remote control transmitter.	• "C-3" will appear on the FL display for about 2 seconds. • Tuner band will set to "FM" and start to auto tuning in each direction.
4. To exit from TEST MODE.	• Press the Power key on the SU-CH80 unit, or press the " □" (CD STOP) on the remote control transmitter, or press the "SET" key on the SL-CH80 unit, or pull out the Power Supply Plug. • Pull out the Power Supply Plug to set the "COLD START" from the above TEST MODE. (The memory will be set to the initial condition on the next AC power on.)	

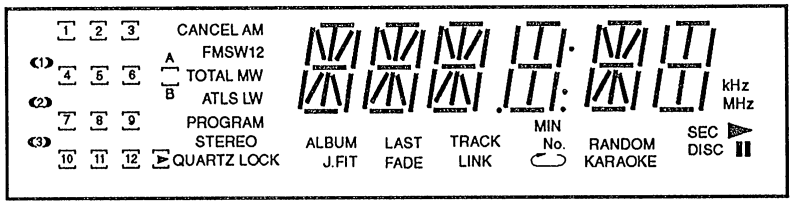

Segment Light Up	Key Pressed (From SL-CH80 unit)	Segment Light Up	Key Pressed (From SL-CH80 unit)
↻	REPEAT	2C	⏮
RANDOM	RANDOM	(3)	DISC3
2B	□	(2)	DISC2
▯▯	▯▯	(1)	DISC1
▷	▷	1A	TAPE
J.FIT	J.FIT	1B	AUX
ALBUM	ALBUM	1C	CD
LAST FADE	LAST FADE	1D	TUNER/BAND
2E	⏏ OPEN/CLOSE	STEREO	FM MODE/BP
2D	▶▶⏭	1E	TUNING MODE

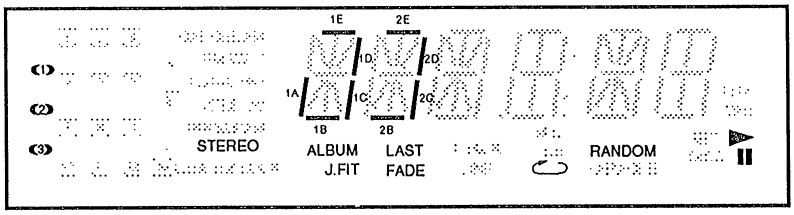

MEASUREMENTS AND ADJUSTMENTS

This unit (SL-CH80) is actuated by power supply from the cassette deck/amplifier SU-CH80. If you wish to actuate this unit without using the cassette deck/amplifer SU-CH80 for checking or repairing, follow below procedure

- **Apply AC 11 V between AC (Z801) – GND (J810) – AC (Z802).**

- **To Check Signals**

  Connect the oscilloscope or the speaker with built-in amplifier to the section between LINE OUT (Lch) of the resistor R845 and the GND point of the jumper J810 as well as the section between LINE OUT (Rch) of the resistor R844 and the GND point of the jumper J810 and check if the signals are outputing from this unit. (Shown in Fig. 5)

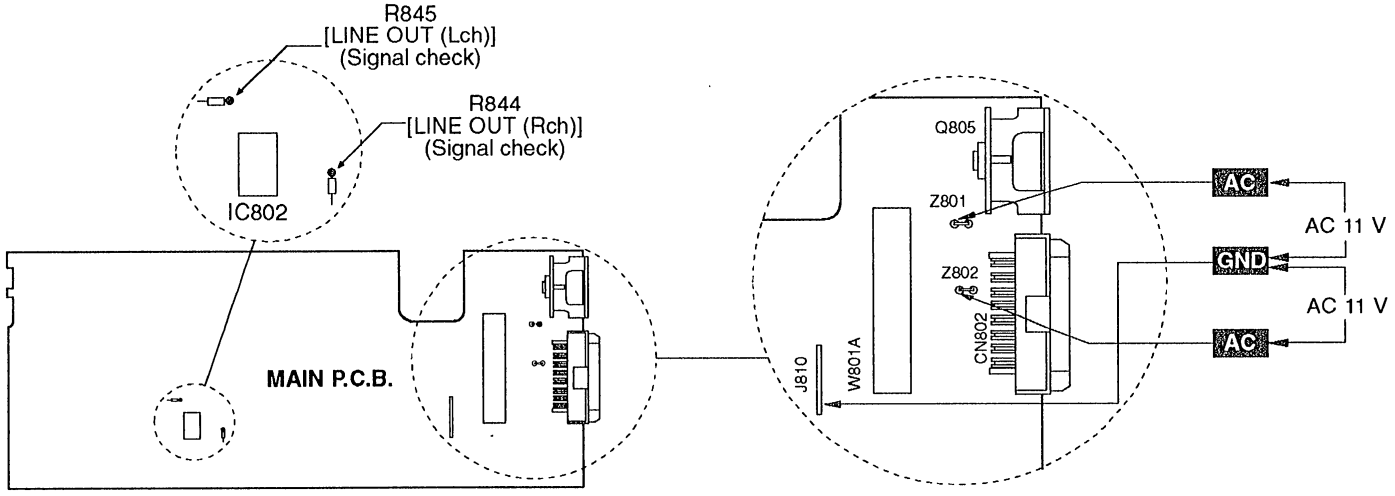

Fig. 5

ALIGNMENT POINTS

< TUNER SECTION >

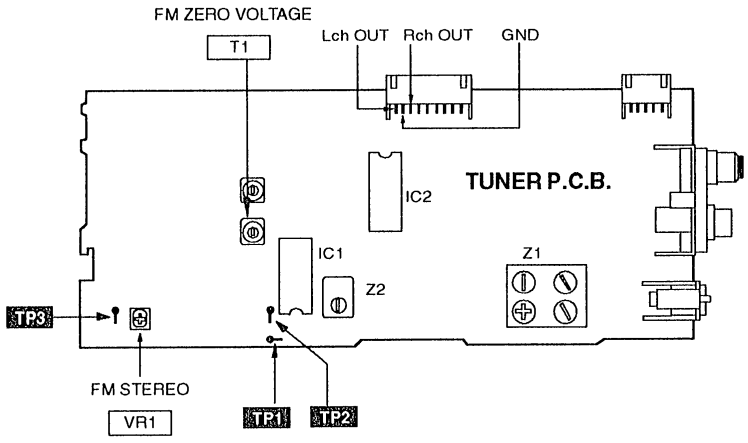

FOR E, GN AREA

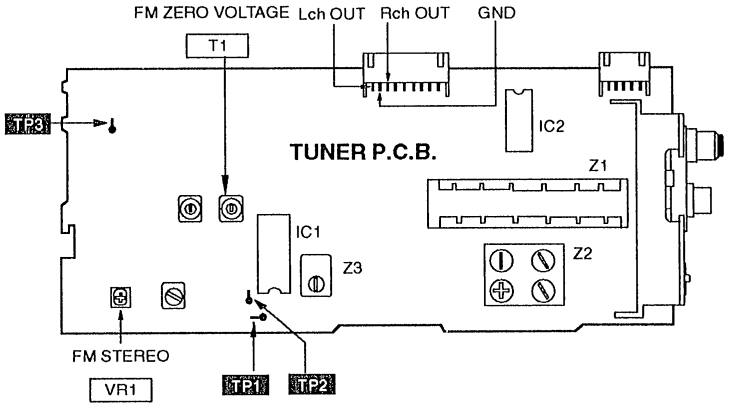

FOR EG AREA

Fig. 1

TUNER SECTION

Control positions and equipment used

- FM signal generator (FM-SG)
- Coil (100 μH)
- Distortion analyzer
- Dummy antenna (75Ω unbalanced)
- DC electronic voltmeter (EVM)
- Digital frequency counter
- Resistor (330 kΩ)

Measurement condition

- Volume control. . . . . maximum
- Equalizer control. . . . . flat

Please refer to Fig. 1 for the adjustment points.

Note : For Z1 (AM ANT and OSC coil) and Z2 (AM-IFT) for E and GN area or Z2(AM ANT and OSC coil) and Z3 (AM-IFT) for EG area, they are supplied as adjusted parts. So, do not turn the cores of the parts. It is not necessary to adjust the AM circuit.

• FM ZERO VOLTAGE ADJUSTMENT

1. Test equipment connection is shown in Fig. 2.
2. Set the unit to "**FM MODE**".
3. Set the radio frequency display and signal generator to **98.1 MHz**.
4. Adjust the core of **T1** so that voltage measured in signal mode is **0 mV (0 ± 30 mV)** in **300 mV** range.
5. Make sure that the distortion factors of L-ch and R-ch are nearly the same and minimum.

Note : The adjusting screwdriver used should be made of resin.

FM SIGNAL GENERATOR CONDITION
Modulation. 100%
Modulation frequency. 1kHz
Output level. 60dB

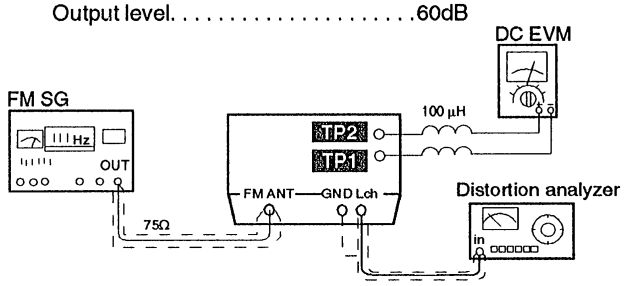

Fig. 2

• FM STEREO ADJUSTMENT (FREE RUN)

1. Test equipment connection is shown in Fig. 3.
2. Set the unit to "**FM AUTO MODE**" position.
3. Set the radio frequency display and signal generator to **98.1MHz**.
4. Adjust **VR1** for **19 kHz ± 50 Hz** on frequency counter reading.
5. Tune a stereo broadcast and confirm the frequency stays at **19 kHz**.

USING ALTERNATIVE METHOD

1. Receive the stereo broadcast.
2. Adjust **VR 1** until stereo indicator lights up. Fix the arm of **VR 1** as shown in Figure 4.

FM SIGNAL GENERATOR CONDITION
Modulation. . . . . 90%, pilot 9%
Modulation frequency. 1kHz
Output level. 60dB

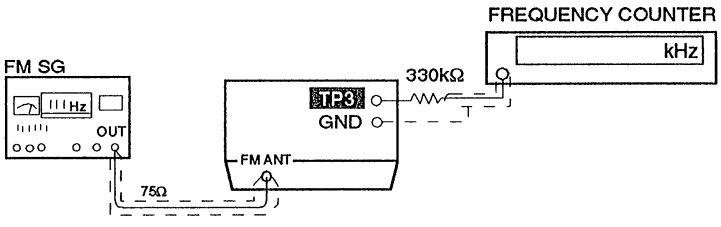

Fig. 3

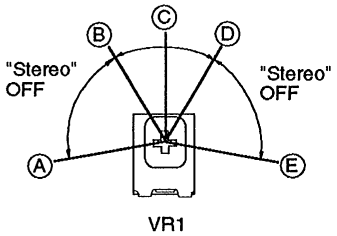

Ⓐ – Ⓑ, Ⓓ – Ⓔ ... "Stereo" OFF position
Ⓑ – Ⓓ ... "Stereo" ON position (Indicator lights up)
Ⓒ ... Adjust point of pilot circuit

Fig. 4

CD PLAYER SECTION

Warning: This product uses a laser diode. Refer to caution statements on page 2.

Caution: It is very dangerous to look or touch the laser beam. (laser radiation is invisible)
With the unit turned "on", laser radiation is emitted from the pickup lens.
Avoid exposure to the laser beam, especially when performing adjustments.

Measuring Instruments and Special Tools

* Test discs
1. Playability test disc (SZZP1054C).
2. Uneven test disc (SZZP1056C).

* Musical program disc (ordinary).
* Dual-beam oscilloscope with bandwidth of 30 MHz or better (with EXT. trigger and 1 : 1 probe).
* Allen wrench (M2.0) (SZZP1101C).
* Lock paint (RZZ0L01)

(1) MECHANICAL ADJUSTMENT

- When the traverse deck is replaced, making adjustments is not necessary. (The traverse deck ass'y is already adjusted.)
- Make adjustments to improve playability if the traverse deck has not been replaced.

1. Connect the oscilloscope's CH. 1 probe across TJ701 (RF) (+) and TJ702 (V-Ref.) (–) on the servo P.C.B.
   Oscilloscope setting : VOLT .....200mV.
   SWEEP.....0.5µs.
   Input coupling .....AC.
2. Switch the player power **ON**, and play track **19** on the test disc (SZZ1056C).
   (Playing any other track will prevent the HEX screws from being accessed.)
3. Leave the player in play mode.
4. Alternately adjust the HEX screws with the 2.0mm allen wrench (SZZP1101C) until the vertical fluctuation of RF signal is minimized and the eye pattern is most stretched. (Refer to Fig. 2 on page 43)
5. After completing the adjustment, lock the HEX screws with lock paint (RZZ0L01).

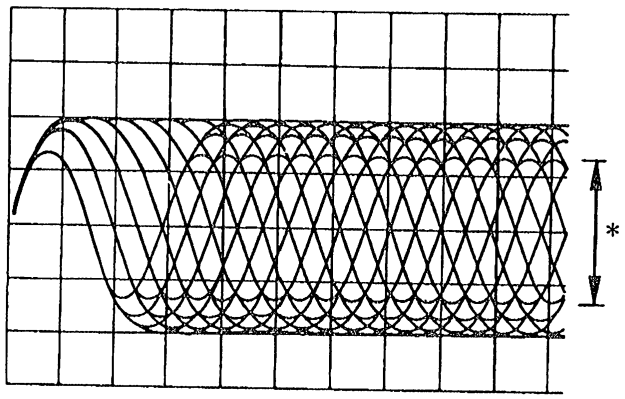

* Most stretched eye pattern

(3) CHECK OF PLAY OPERATION AFTER ADJUSTMENT

*** Checking skip Search**
1. Play an ordinary musical program disc.
2. Press the skip button to check for normal skip search operation (in both the forward and reverse directions).

*** Checking Manual Search**
1. Play an ordinary musical program disc.
2. Press the manual search button to check for smooth manual search operations at either low or high speed (in both the forward and reverse directions).

*** Checking Playability**
1. Play the 0.7mm black dot and the 0.7mm wedge on the test disc (SZZP1054C) and verify that no sound skip or noise occurs.
2. Play the middle tracks of the uneven test disc (SZZP1056C) and verify that no sound skip or noise occurs.

ALIGNMENT POINTS

< CD PLAYER SECTION >

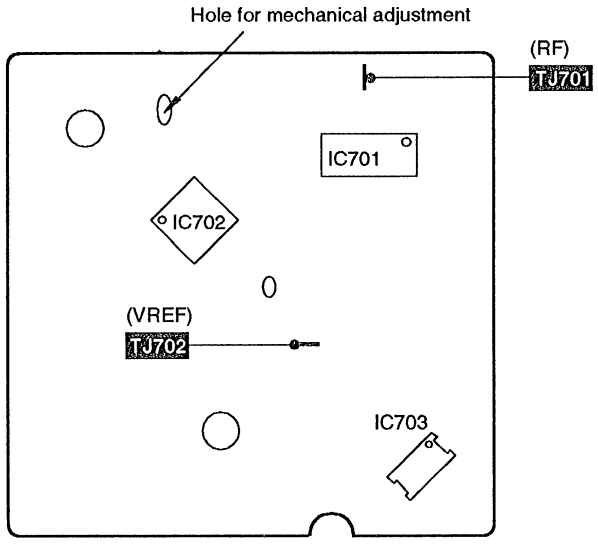

Fig.1

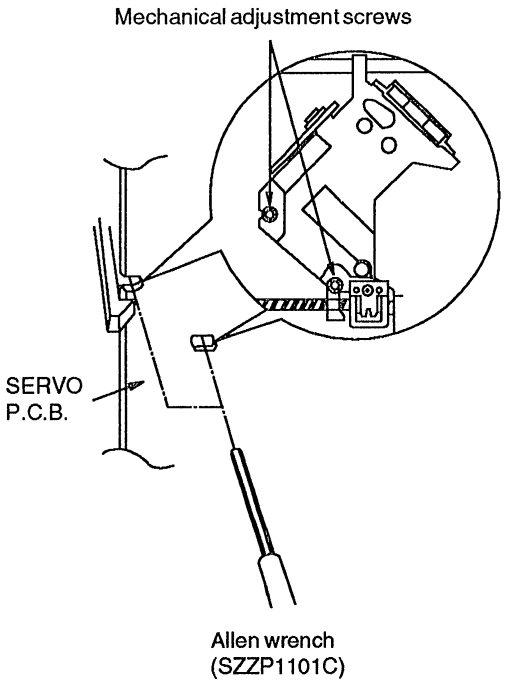

Fig.2

DISPLAY FUNCTIONS OF AUTOMATICALLY-ADJUSTED RESULTS (SELF-CHECK FUNCTION)

The unit contains a function which displays the result of the automatically adjustment of the servo circuits (tracking, focus servo,etc.) as an error code on the FL display.
The error code display serves as a repair guide showing the automatically adjustment circuit is at fault. The procedures for displaying the error codes are given below.

Procedures to display the error code

1. Check the servo P.C.B. as shown in the Disassembly Instructions, "How to check the Servo and Main P.C.B.".
2. Switch the unit to ON. (See page 40)
3. Press the "CD" key to select CD function.
4. Press the "□" (CD STOP) key on the unit, then simultaneously press " ▶▶/▶▶| " key for about 2 seconds.
5. The "**C - 2**" will appear on the FL display for 2 seconds (self-check function mode is activated).
6. The "**E-00**" will appear on the FL display if no error is found.
7. The error code provides a rough indication of which servo circuit is malfunctioning.

Error code based troubleshooting

- The unit is satisfactory if the error code is **E-00**.
- Before testing , make sure that the test disc is free of scratches and dirt and optical pickup is clean.

FL error code display	Symptom	Probable cause	Signal to check		Normal the values of voltage and waveform	
			Signal name	Location	PLAY	STOP
E01	Focus and tracking offset adjustments did not complete in the specified time period.	① Clocks X1 and X2, power supply VDD, and reset/RST, all on IC702. ② MDATA, MCLK, MLD and SENSE signals to/from the mechanism controller.	MDATA	IC702 ⑧ pin		4.8V
			MCLK	IC702 ⑦ pin		4.8V
			MLD	IC702 ⑨ pin		
			SENSE	IC702 ⑩ pin	0V	0V
			/RST	IC702 ⑱ pin	4.9V	4.9V
			X1	IC702 ⑱ pin		
			X2	IC702 ⑲ pin		
E03 E05 E07 E09 E0B E0D E0F	Disc play unstable	① Scratches or contaminants on disc surface. ② Focus and tracking servo circuits (check waveforms, voltages, and part constants). ③ Spindle driver circuit. ④ Optical pickup.	FE	IC702 ㉜ pin	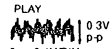	2.4V
			TE	IC702 ㉝ pin		2.4V
			FOD	IC702 ㉘ pin	2.4V	2.4V
			TRD	IC702 ㉗ pin	2.4V	2.4V
			KICK	IC702 ㉖ pin	2.4V	2.4V
			/FLOCK	IC702 ⑪ pin	0V	4.9V
			/RF DET	IC702 ㊳ pin	0V	4.8V
			RF	TJ701		3.4V
			STAT	IC702 ⑰ pin	3.5V	0V

FL error code display	Symptom	Probable cause	Signal to check		Normal the values of voltage and waveform	
			Signal name	Location	PLAY	STOP
E04 E06 E0C E0E	Best Eye (PD Balance) adjustment did not complete in specified time period.	① Scratches or contaminants on disc surface. ② Focus and tracking servo circuits (check waveforms, voltages, and part constants). ③ Optical pickup.	FBAL	IC702 ㉚ pin	2.5 ± 1.25V	2.5 ± 1.25V
			RF	TJ701	PLAY 1.2V p-p, 0.5µs 0 1V/DIV	3.4V
			FE	IC702 ㉜ pin	PLAY 0.3V p-p, 2ms 0 1V/DIV	0V
			/TLOCK	IC702 ⑫ pin	0V	0V
			OFT	IC702 ㊱ pin	0V	0V
E08 E0A	Focus or tracking gain adjustment did not complete in the specified time period.	① Scratches or contaminants on disc surface. ② Focus and tracking servo circuits (check waveforms, voltages, and part constants). ③ Optical pickup.	FE	IC702 ㉜ pin	PLAY 0.3V p-p, 2ms 0 1V/DIV	2.4V
			TE	IC702 ㉝ pin	PLAY 0.4V p-p, 2ms 0 1V/DIV	2.4V
			/TLOCK	IC702 ⑫ pin	0V	0V
			OFT	IC702 ㊱ pin	0V	0V

TERMINAL GUIDE OF ICs, TRANSISTORS & DIODES

AN7273W

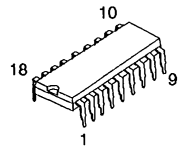

AN8389SE1

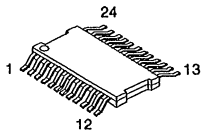

AN8802SCE1V	32 Pin
LA5608M-TE-L	14 Pin

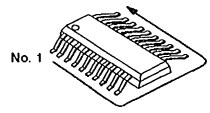

RVIBA1332L

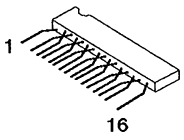

BA4558FDXE2

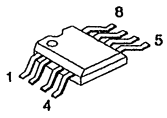

BA6218

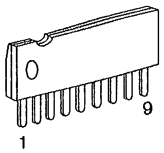

AN78M05

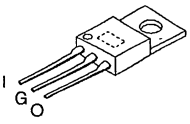

LM7001

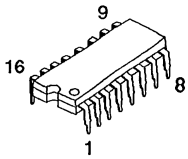

M38174M8246 80 Pin

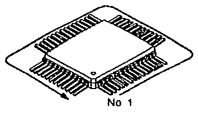

MN66271RA 80 Pin

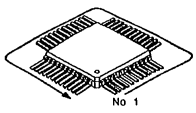

2SB621ARTA
2SC2001KTA

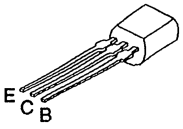

2SB709S

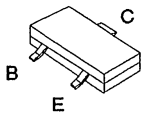

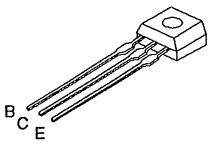

2SC2786MTA
2SC2787FL1TA
2SC2787LTA
2SD1020HTA

2SB1185E
2SD1273P

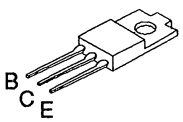

2SD2037ETA

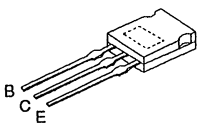

2SK544F-AC

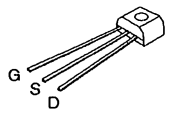

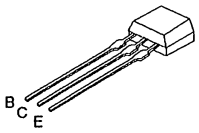

2SA933SSTA
2SC1740SSTA
RVTDTC124EST
RVTDTC143EST

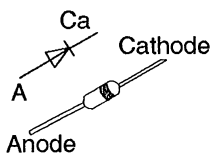

1SS291TA
MA165TA
RVD1SS133TA

SVC211SPA-AL

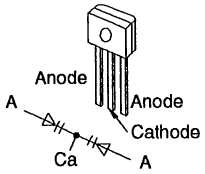

GL380TB
PT381TB

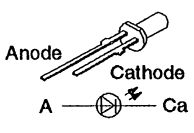

MA4270MTA

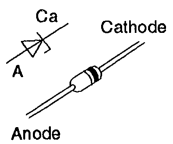

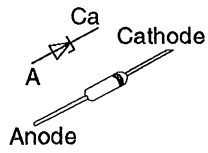

RVDMTZ10BTA
RVDMTZ11BTA
RVDMTZ15CTA
RVDMTZ4R7BTA
RVDMTZ5R1BTA
RVDMTZ5R6CTA
RVDMTZ6R8ATA
RVDMTZ8R2CTA

1D3E

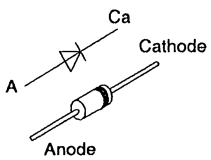

RSQGP1S53V

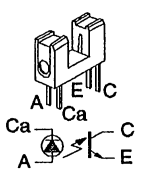

TERMINAL FUNCTION OF IC'S

• IC702 (MN66271RA)

Pin No.	Mark	I/O	Function
1	BCLK	O	Serial bit clock terminal (Not used, open)
2	LRCK	O	L/R discriminating signal (Not used, open)
3	SRDATA	O	Serial data (Not used, open)
4	DVDD1	I	Power supply (digital circuit) terminal
5	DVSS1	—	GND (digital circuit) terminal
6	TX	O	Digital audio interface signal
7	MCLK	I	Microprocessor command clock signal
8	MDATA	I	Microprocessor command data signal
9	MLD	I	Microprocessor command load signal
10	SENSE	O	Sense signal output (OFT,FESL,MAGEND,NAJEND,POSAD,SFG)
11	/FLOCK	O	Optical servo condition(focus)("L" : lead-in)
12	/TLOCK	O	Optical servo condition(tracking)("L" : lead-in)
13	BLKCK	O	Sub-code block clock (f=75Hz)
14	SQCK	I	External clock signal input for sub-code Q register
15	SUBQ	O	Sub-code Q code output
16	DMUTE	I	Muting input ("H" : mute)
17	STAT	O	Status signal output (CRC,CUE,CLVS,TTSTVP,FCLV,SQCK)
18	/RST	I	Reset input
19	SMCK	O	1/2-divided clock signal of crystal oscillating at MSEL = "H" (fSMCK=8.4672MHz) 1/4-divided clock signal of crystal oscillating at MSEL="L" (fSMCK=4.2336MHz)
20	PMCK	O	1/192-divided clock signal of crystal oscillating (fPMCK=88.2kHz) (Not used, open)
21	TRV	O	Traverse servo control output
22	TVD	O	Traverse drive signal output
23	PC	O	Spindle motor ON signal output ("L" : ON)
24	ECM	O	Spindle motor drive signal output (forced mode output)
25	ECS	O	Spindle motor drive signal output (servo error signal output)
26	KICK	O	Kick pulse output
27	TRD	O	Tracking drive output
28	FOD	O	Focus drive output
29	VREF	I	D/A (drive) output (TVD,ECS,TRD,FOD, FBAL,TBAL) Reference voltage input.
30	FBAL	O	Focus balance adjustment output (Not used,open)

Pin No.	Mark	I/O	Function
31	TBAL	O	Tracking balance adjustment output
32	FE	I	Focus error signal input (analog input)
33	TE	I	Tracking error signal input (analog input)
34	RFENV	I	RF envelope signal input
35	VDET	I	Vibration detection signal input ("H" : detection)
36	OFT	I	Off-track signal input ("H" : off track)
37	TRCRS	I	Track cross signal input
38	/RFDET	I	RF detection signal input ("L" : detection)
39	BDO	I	Dropout signal input ("H" : Dropout)
40	LDON	O	Laser on signal output ("H" : ON)
41	TES	O	Tracking error shunt signal output ("H" : shunt)
42	PLAY	O	Play signal out ("H" : PLAY)
43	WVEL	O	Double speed status signal output ("H" : DS)
44	ARF	I	RF signal input
45	IREF	I	Reference current input
46	DRF	I	DSL bias (Not used, open)
47	DSLF	I/O	DSL loop filter
48	PLLF	I/O	PLL loop filter
49	VCOF	I/O	VCO loop filter (Not used, open)
50	AVDD2	I	Power supply input (for analog circuit)
51	AVSS2	—	GND (for analog circuit)
52	EFM	O	EFM signal output (Not used, open)
53	PCK	O	PLL extraction clock ouput (Not used, open) (fPCK=4.321 MHz during normal playback)
54	PDO	O	Phase comparison signal of EFM and PCK signals (Not used, open)
55	SUBC	O	Sub-code serial data output (Not used, open)
56	SBCK	I	Clock input for sub-code serial data (Not used, open)
57	VSS	—	GND
58	X1	I	Crystal oscillating circuit input (f=16.9344MHz)
59	X2	O	Crystal oscillating circuit output (f=16.9344MHz)
60	VDD	I	Power supply input (for oscillating circuit)
61	BYTCK	O	Byte clock output (Not used, open)
62	/CLDCK	O	Sub-code frame clock signal output (fCLDCK=7.35kHz during normal playback)

Pin No.	Mark	I/O	Interpolation flag output ("H" : interpolation) (Not used, open) Function
63	FCLK	O	Crystal frame clock signal output (fCLK=7.35kHz, double=14.7kHz)
64	IPFLAG	O	
65	FLAG	O	Flag output (Not used, open)
66	CLVS	O	Spindle servo phase synchronizing signal output ("H" : CLV, "L" : rough servo) (Not used, open)
67	CRC	O	Sub-code CRC checked output ("H" : OK, "L" : NG) (Not used, open)
68	DEMPH	O	De-emphasis ON signal output ("H" : ON) (Not used, open)
69	RESY	O	Frame resynchronizing signal output (Not used, open)
70	/RST2	I	Reset input through MASH circuit ("L" : Reset)
71	/TEST	I	Test input
72	AVDD1	I	Power supply input (for analog circuit)

Pin No.	Mark	I/O	Function
73	OUTL	O	Left channel audio signal output
74	AVSS1	—	GND
75	OUTR	O	Right channel audio signal output
76	RSEL	I	RF signal polarity assignment input (at "H" level, RSEL="H", at "L" level, RESL="L")
77	CSEL	I	Crystal oscillating frequency designation input "L" : 16.9344MHz "H" : 33.8688MHz
78	PSEL	I	Test input (normally "L") (Not used, open)
79	MSEL	I	Output frequency switching for SMCK terminal "H" : SMCK=8.4672MHz "L" : SMCK=4.2336MHz (Not used, open)
80	SSEL	I	Output mode switching of SUBQ terminal ("H" : Q code buffer mode)

• IC701 (AN8802SCE1V)

Pin No.	Mark	I/O	Function
1	PDAD	I	PDA channel signal input with delay
2	PDA	I	PDA channel signal input without delay
3	LPD	I	Laser PD connection
4	LD	O	Power supply for LD driving
5	AMPI	I	RF amplifier input
6	VCC	I	Power supply connection
7	AMPO	O	RF amplifier output (Not used, open)
8	CAGC	I	AGC loop filter connection
9	ARF	O	RF AGC output
10	CENV	I	Capacitor connection for RF detection
11	CEA	I	Capacitor connection for HPF amplifier
12	GND	—	Ground connection
13	LDON	I	ON/OFF input of LD APC("H" : ON, "L" : OFF)
14	TES	I	Tracking error shunt signal input
15	PLAY	I	Play signal input ("H" : PLAY)
16	WVEL	I	Double speed ("H" : double, "L" : single)

Pin No.	Mark	I/O	Function
17	BDO	O	Dropout detection control
18	/RFDET	O	RF detection signal ("L" : detection)
19	CROSS	O	Tracking error zero cross output
20	OFTR	O	Off-track detection ("H" : detection)
21	VDET	O	Vibration detection signal output("H" : detection)
22	ENV	O	Envelope output terminal
23	TEBPF	I	Vibration detection signal input
24	TE	O	Tracking error signal output
25	FE	O	Focus error signal output
26	PTO	O	Potentioamplifier inversion input (Not used, open)
27	PTI	I	Potentioamplifier inversion output (Not used, open)
28	TBAL	I	Tracking balance signal input
29	FBAL	I	Focus balance signal input
30	VREF	O	Reference voltage output
31	PDB	I	Photo detection Bch input without delay
32	PDBD	I	Photo detection Bch input with delay

• IC901 (M38174M8246)

Pin No.	Mark	I/O	Function
1	BSDTO	O	Bus data output
2	BSCKO	O	Bus clock output
3	BSDTI	I	Bus data input
4	BSCKI	I	Bus clock input
5	MLD/PLL CE	O	Microprocessor command /PLL tuner load signal output
6	MCLK/PLL CLK	O	Microprocessor command /PLL tuner clock signal output
7	MDATA/PLL DATA	O	Microprocessor command /PLL tuner data signal output
8	REST SW	I	CD Innermost track sense SW(S701) status
9	CD RST	O	CD reset signal output
10	SQCK	O	External clock for CD subcode Q register
11	NC	—	Not used
12	SUBQ	I	CD Subcode Q input
13	SENSE	I	CD sense signal input
14	FLOCK	I	CD focus signal input
15	TLOCK	I	CD tracking signal input
16	STATUS	I	CD status signal input
17	MUTEC	O	Muting signal output (CD)
18	PSIN	I	Photo sensor signal input
19	PHO	I	Photo sensor signal input (speed detect)
20	F-OP	I	Tray full open detect signal input
21	H-OP	I	Tray half open detect signal input
22	CLOSE (UP)	I	Traverse up detect signal input
23	OPEN(DOWN)	I	Traverse down detect signal input
24	BKCK	O	CD subcode block clock signal input
25	PWDET	I	Power on detect signal input
26	ACDET	I	Power down detect signal input
27	RESET	I	Power on reset signal input
28	XC IN	I	Clock input (32.768kHz)
29	XC OUT	O	Clock output (32.768kHz)
30	XIN	I	Clock input (4.19MHz)

Pin No.	Mark	I/O	Function
31	XOUT	O	Clock output (4.19MHz)
32	VSS	—	GND
33	MBP1	O	Microprocessor beatproof 1
34	MBP2	O	Microprocessor beatproof 2
35	SD	I	Signal received detection terminal
36	MIC SW	I	Microphone SW detection terminal (GND)
37	MONO	O	FM mono control signal output
38	STEREO	I	FM stereo signal detection terminal
39	JOGB	I	Jog dial signal input
40	JOGA	I	Jog dial signal input
41	MUTET	O	Muting signal output (TUNER)
42	SEL	O	Function (CD/Tuner) select signal output
43	LED CNT	—	Not used
44	SOL	O	Solenoid drive signal output
45	FWD	O	Motor control (FWD)
46	REV	O	Motor control (REV)
47 ~ 56	DIG9 ~ DIG0	O	FL digit signal output
57 ~ 72	SEG15 ~ SEG0	O	FL segment drive signal output
73	VCC	—	Power supply terminal (+5V)
74	VEE	—	– 28V
75	AVSS	—	GND
76	VREF	—	Output reference voltage
77	REG	I	Regulator signal input
78 ~ 80	KEY3 ~ KEY1	I	Operation switch signal input

• IC703 (AN8389SE1)

Pin No.	Mark	I/O	Function
1	VCC	I	Power supply terminal
2	VREF	I	Reference voltage input
3	IN4	I	Motor driver (4) input
4	IN3	I	Motor driver (3) input
5	GND	—	Ground connection
6	NC	—	Ground connection
7	NRESET	I	Reset input
8	GND	—	Ground connection
9	IN2	I	Motor driver (2) input
10	PC2	I	PC2 (power cut) input
11	IN1	I	Motor driver (1) input
12	PC1	I	PC1 (power cut) input (Not used, open)

Pin No.	Mark	I/O	Function
17	PVCC1	I	Power supply (1) for driver
18	PGND1	—	Ground connection (1) for driver
19	D1–	O	Motor driver (1) reverse-action output
20	D1+	O	Motor driver (1) forward-action output
21	D2–	O	Motor driver (2) reverse-action output
22	D2+	O	Motor driver (2) forward-action output
23	D3–	O	Motor driver (3) reverse-action output
24	D3+	O	Motor driver (3) forward-action output
25	D4–	O	Motor driver (4) reverse-action output
26	D4+	O	Motor driver (4) forward-action output
27	PGND2	—	Ground connection (2) for driver
28	PVCC2	I	Power supply (2) for driver

■ PACKAGING

■ SL-CH80 (TUNER/COMPACT DISC CHANGER)

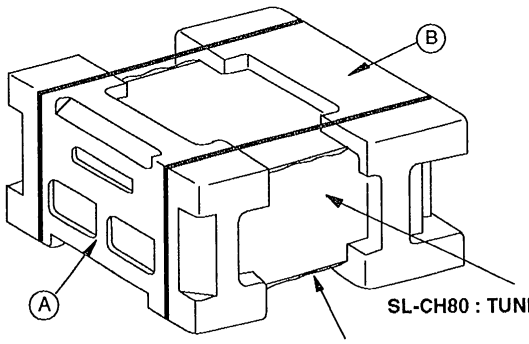

SL-CH80 : TUNER/COMPACT DISC CHANGER

P1 (RPF0100) : BAG (SET)

* Ⓐ , Ⓑ - P2 (RPN0763) : POLYFOAM

CD LOADING UNIT PARTS LOCATION

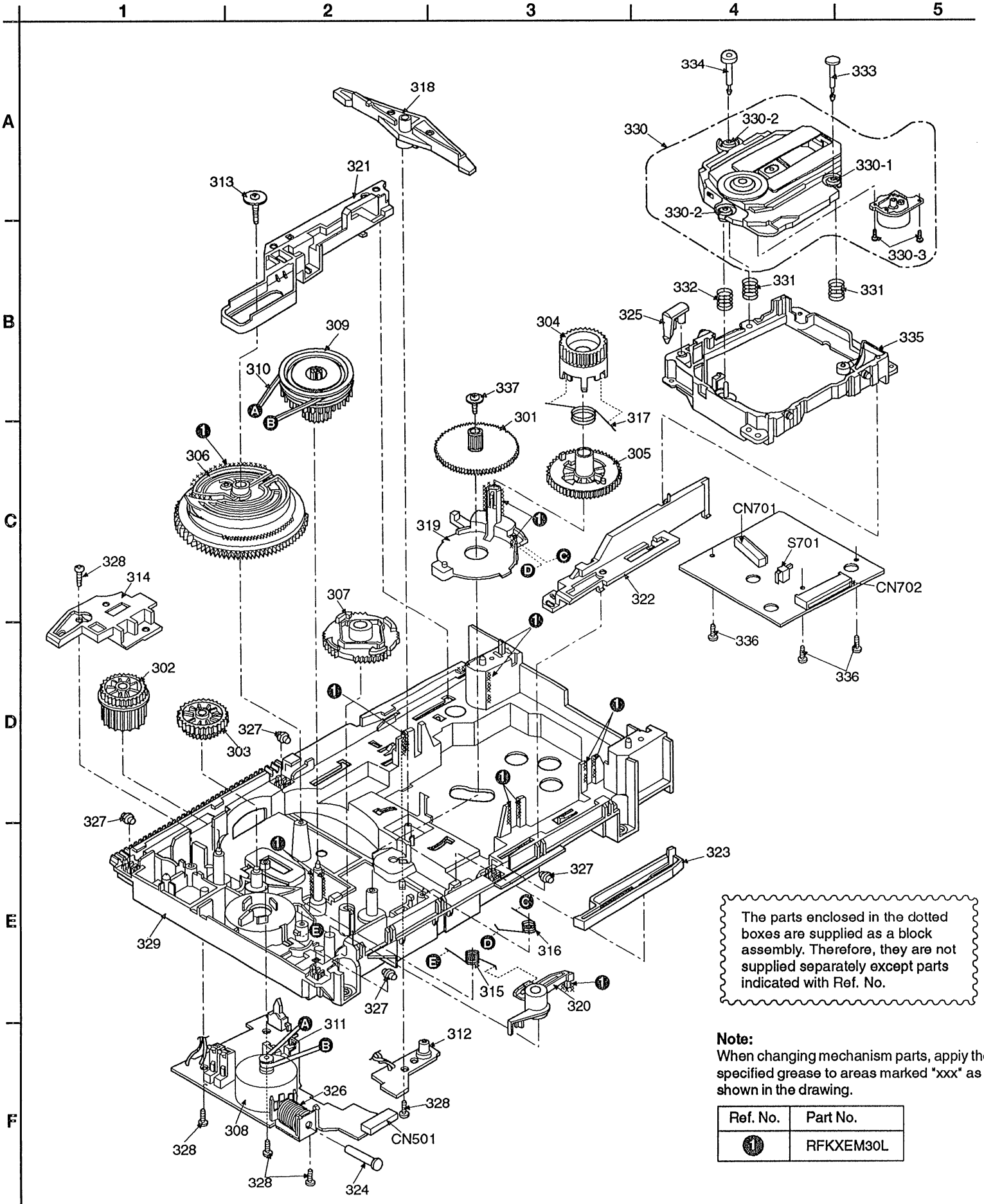

The parts enclosed in the dotted boxes are supplied as a block assembly. Therefore, they are not supplied separately except parts indicated with Ref. No.

Note:
When changing mechanism parts, appiy the specified grease to areas marked "xxx" as shown in the drawing.

Ref. No.	Part No.
❶	RFKXEM30L

CD LOADING UNIT PARTS LIST

Ref No.	Part No.	Part Name & Description	Remarks
		CD LOADING UNIT	
301	RDG0194	GEAR	
302	RDG0223	GEAR	
303	RDG0224	GEAR	
304	RDG0244	GEAR	
305	RDG0245	GEAR	
306	RDK0022	GEAR	
307	RDK0023	GEAR	
308	RFKPLCH555PK	MOTOR ASS'Y	
309	RDP0058	GEAR	
310	RDV0025	BELT	
311	RMN0204	SENSOR HOLDER	
312	RMN0222	LED HOLDER	
313	RHD30046	SCREW	
314	RMA0653	ANGLE	
315	RME0120	SPRING	
316	RME0121	SPRING	
317	RME0137	SPRING	
318	RML0177	LEVER	
319	RML0288	LEVER	
320	RML0289	LEVER	
321	RMM0097	SLIDE PLATE(1)	
322	RMM0098	SLIDE PLATE(2)	
323	RMM0099	SLIDE PLATE(3)	
324	RMS0398	PLUNGER	
325	RMX0072	LEVER	
326	RSJ0003	SOLENOID(PL501)	
327	RMR0701-K	ROLLER	
328	XTB3+10JFZ	SCREW	
329	RFKJLCH555PB	MECH CHASSIS ASS'Y	
330	RAE0113Z	TRAVERSE UNIT	
330-1	SHGD112	FLOATING RUBBER(A)	
330-2	SHGD113-1	FLOATING RUBBER(B)	
330-3	XQS2+A35FZ	SCREW	
331	RME0109	FLOATING SPRING A	
332	RME0142	FLOATING SPRING B	
333	RMS0123-1	FIXED PIN A	
334	RMS0350	FIXED PIN B	
335	RMR0698-K	TRAVERSE CHASSIS	
336	XTV2+6G	SCREW	
337	RHD26014	SCREW	

Ref No.	Part No.	Part Name & Description	Remarks

WIRING CONNECTION DIAGRAM

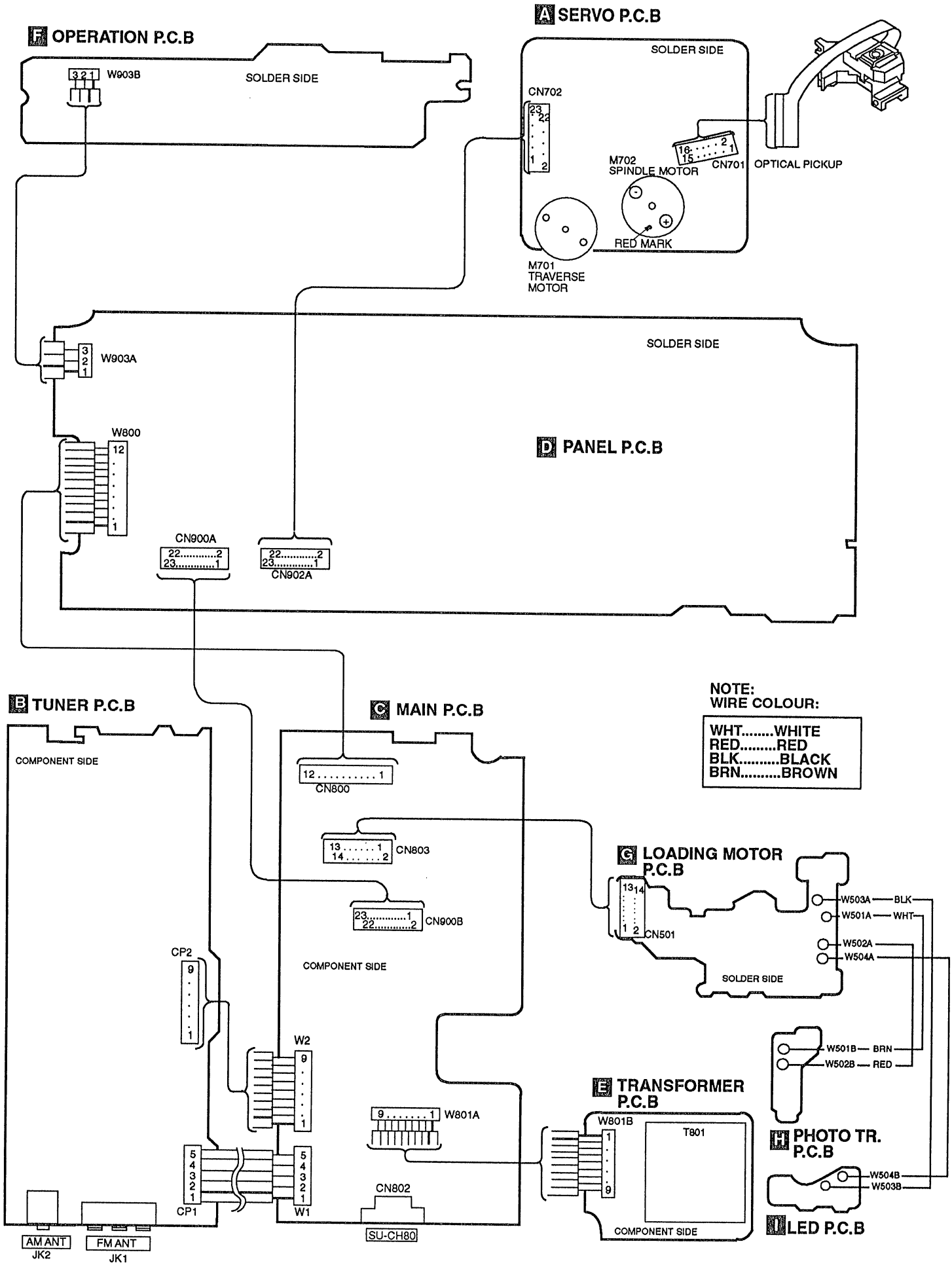

TROUBLESHOOTING GUIDE

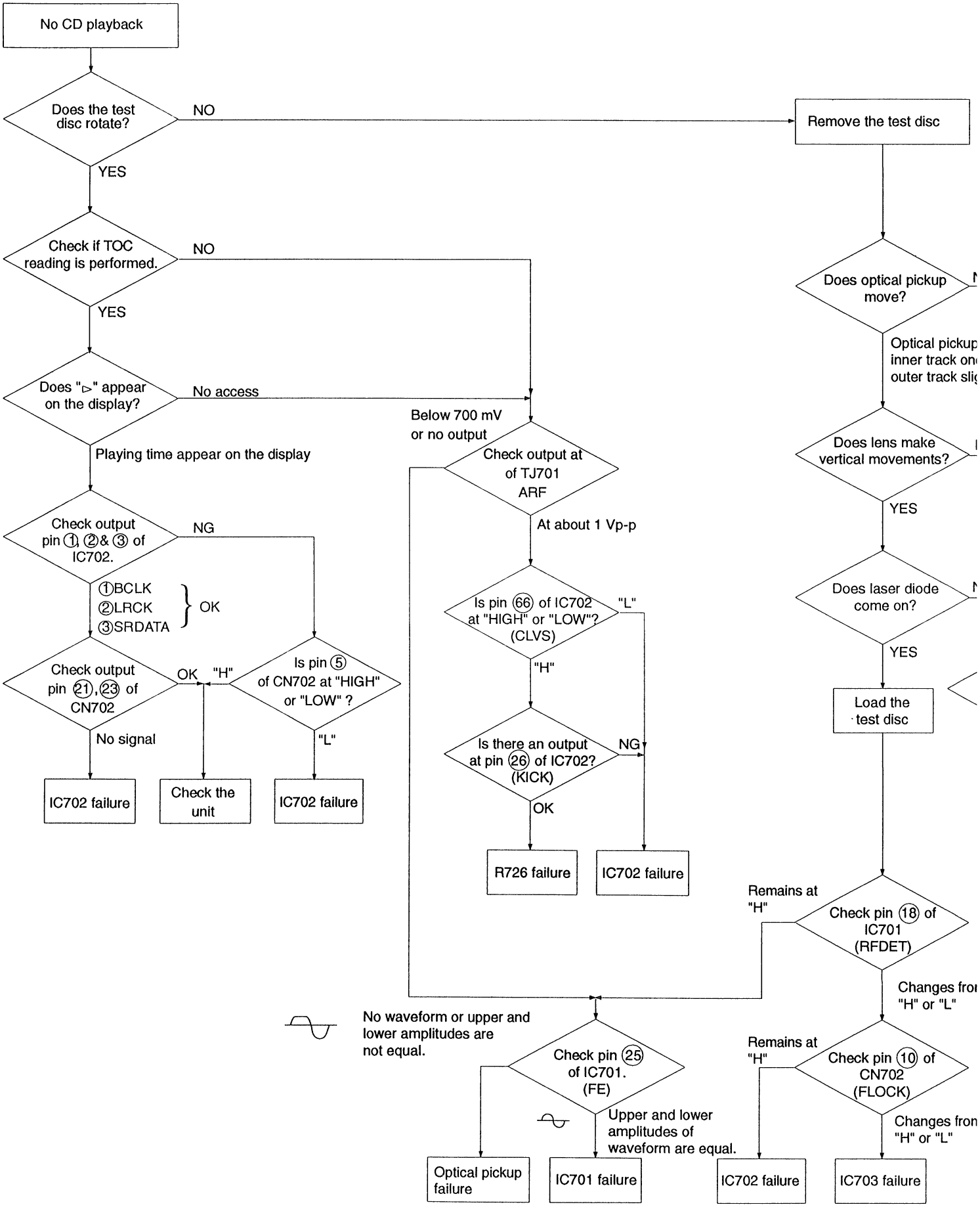

disc

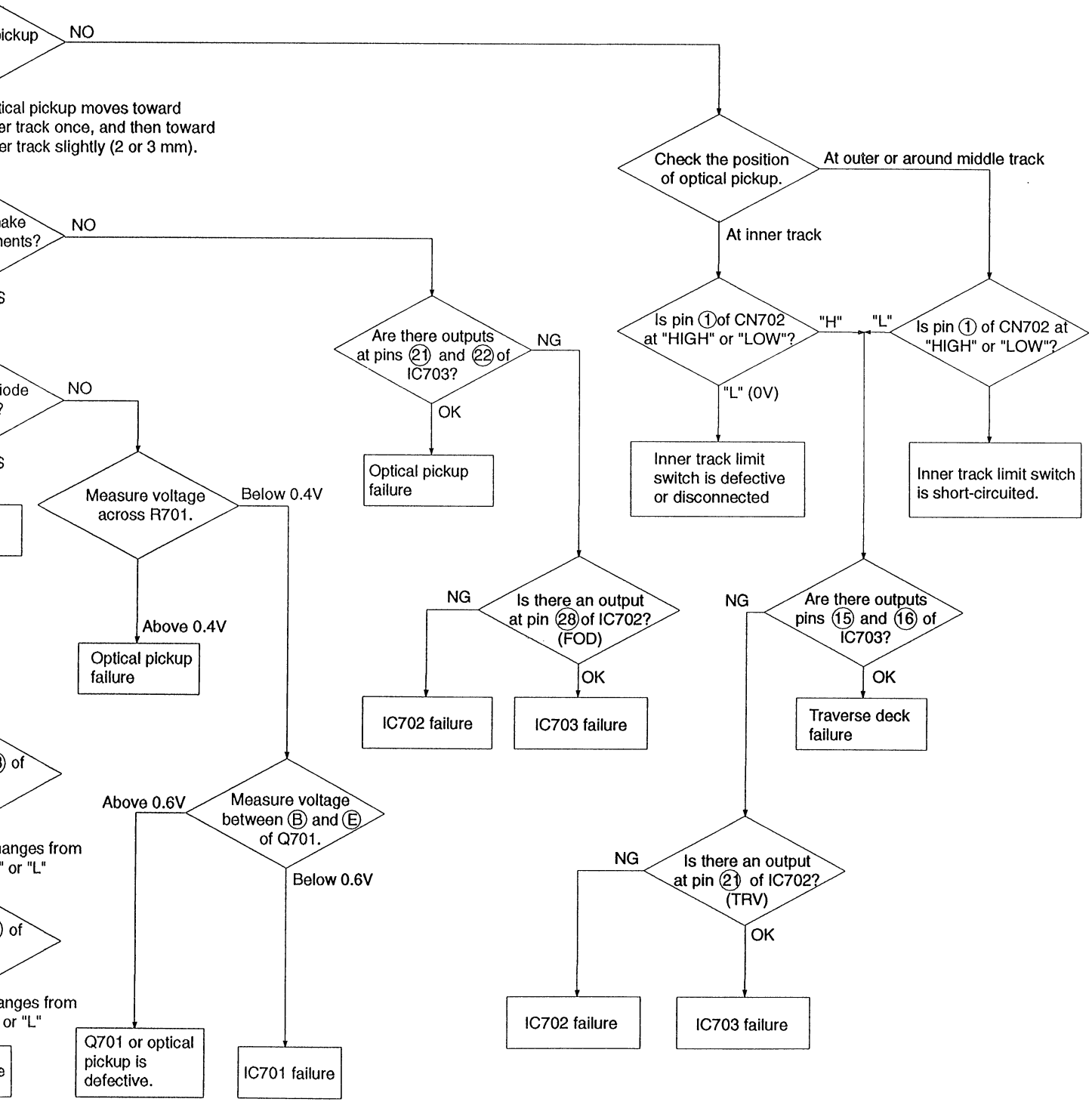
ickup
NO
tical pickup moves toward
er track once, and then toward
er track slightly (2 or 3 mm).
Check the position of optical pickup.
At outer or around middle track
At inner track
ake
nents?
NO
Are there outputs at pins ㉑ and ㉒ of IC703?
NG
OK
Optical pickup failure
Is pin ①of CN702 at "HIGH" or "LOW"?
"H"
"L"
Is pin ① of CN702 at "HIGH" or "LOW"?
"L" (0V)
Inner track limit switch is defective or disconnected
Inner track limit switch is short-circuited.
iode
NO
Measure voltage across R701.
Below 0.4V
Above 0.4V
Optical pickup failure
NG
Is there an output at pin ㉘ of IC702? (FOD)
OK
IC702 failure
IC703 failure
NG
Are there outputs pins ⑮ and ⑯ of IC703?
OK
Traverse deck failure
Above 0.6V
Measure voltage between Ⓑ and Ⓔ of Q701.
Below 0.6V
NG
Is there an output at pin ㉑ of IC702? (TRV)
OK
IC702 failure
IC703 failure
Q701 or optical pickup is defective.
IC701 failure

CABINET PARTS LOCATION

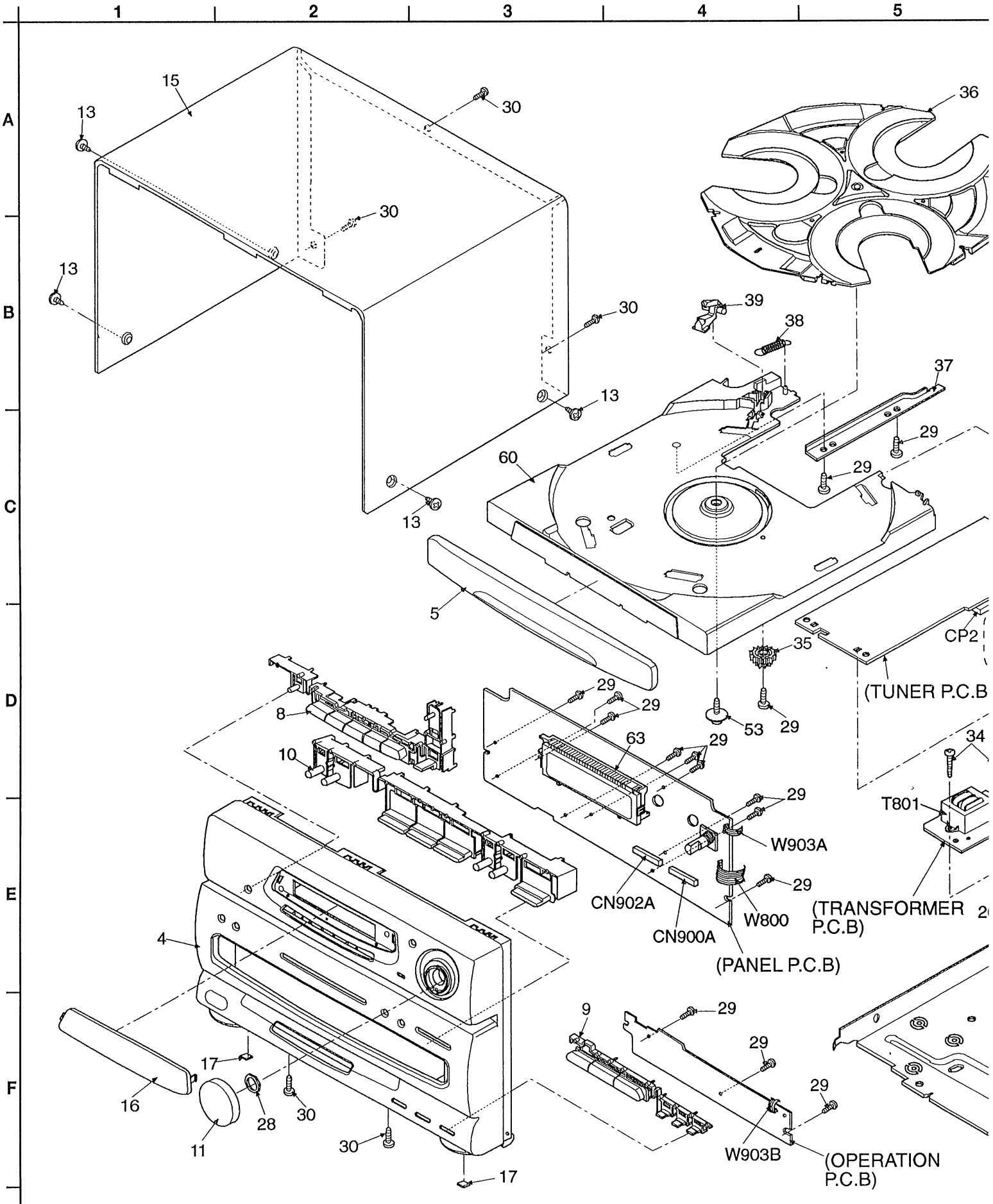

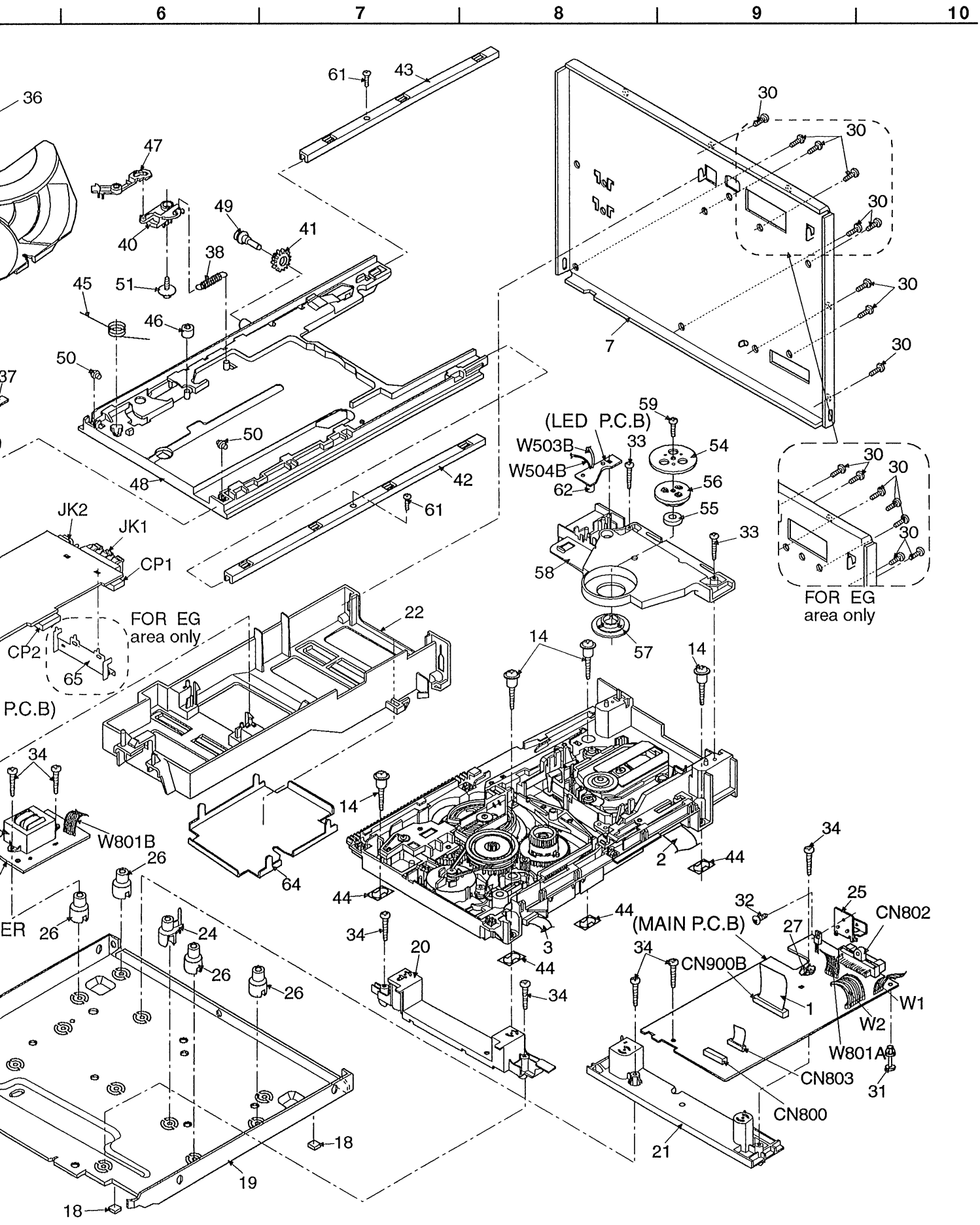
6
7
8
9
10
36
61
43
30
47
49
41
40
38
45
51
46
50
37
7
59
(LED P.C.B)
W503B
33
54
W504B
62
56
55
48
42
61
JK2
JK1
CP1
58
FOR EG
area only
22
CP2
65
57
14
P.C.B)
34
W801B
26
64
2
44
ER
24
20
3
(MAIN P.C.B)
32
25
CN802
27
CN900B
1
W1
W2
W801A
CN803
31
CN800
21
18
19

REPLACEMENT PARTS LIST

Notes: * Important safety notice:
Components identified by ⚠ mark have special characteristics important for safety.
Furthermore, special parts which have purposes of fire-retardant (resistors), high-quality sound (capacitors), low noise (resistors), etc are used.
When replacing any of these components, be sure to use only manufacturer's specified parts shown in the parts list.

* The parenthesized indications in the Remarks columns specify the areas. (Refer to the cover page for area)
Parts without these indications can be used for all areas.
* Warning : This product uses a laser diode. Refer to caution statements on page 2.
ACHTUNG : Die lasereinheit nicht zerlegen.
Die lasereinheit darf nur gegen einc vom herstellar spezifizierte einheit ausgetauscht werden.
* [M] Indicates in the Remarks columns indicates parts supplied by **MESA.**

Ref No.	Part No.	Part Name & Description	Remarks
		CABINET AND CHASSIS	
1	REE0549	FFC (PANEL-MAIN)	[M]
2	REE0550	FFC (PANEL-CD)	[M]
3	REE0551	FFC (CD-MAIN)	[M]
4	RFKGLCH80PK	FRONT PANEL ASS'Y	[M]
5	RGK0610-K	CHANGER LID	[M]
7	RGR0183B-D	REAR PANEL	[M] (E)
7	RGR0183B-E	REAR PANEL	[M] (EG)
7	RGR0183B-F	REAR PANEL	[M] (GN)
8	RGU1009-K	BUTTON, INPUT SELECT	[M]
9	RGU1012-K	BUTTON, CD OPERATION	[M]
10	RGU1013-K	BUTTON, DISK SELECT	[M]
11	RGW0194-K	KNOB, AI JOG	[M]
13	RHD30007	SCREW	
14	RHD30048	SCREW	[M]
15	RKM0248Z-K	CABINET	[M]
16	RKW0323A-Q	FL WINDOW	[M]
17	SHS3276	LEG FELT	[M]
18	RKA0059-K	LEG RUBBER	[M]
19	RMK0236	BOTTOM CHASSIS	[M]
20	RMR0734-X	CHANGER SUPPORT (F)	[M]
21	RMR0735-X	CHANGER SUPPORT (R)	[M]
22	RMR0738-X	TU PCB SUPPORT	[M]
24	RMR0741-X	PCB SUPPORT (PIN)	[M]
25	RMY0132	HEAT SINK	[M]
26	SHE187-3	PCB SUPPORT	
27	SNE1004-1	EARTH TERMINAL	
28	XNS9D	NUT	
29	XTBS26+10J	SCREW	
30	XTBS3+8JFZ1	SCREW	
31	RMR0406	MAIN PCB SUPPORT	[M]
32	XTB3+12CFN	SCREW	
33	XTB3+16JFZ	SCREW	
34	XTB3+20J	SCREW	
35	RDG0228	GEAR	
36	RGT0014	ROTARY TRAY	
37	RMA0681	ANGLE	
38	RME0123	SPRING	
39	RML0312	LEVER	
40	RDG0225	GEAR	
41	RDG0227	GEAR	
42	RMA0654	ANGLE(A)	
43	RMA0655	ANGLE(B)	
44	RMG0319-K	RUBBER CUSHION	
45	RME0139	SPRING	
46	RMG0293-C	RUBBER	
47	RML0291	LEVER	
48	RMR0627-K	TRAY BASE	
49	RMS0382	SHAFT	
50	SDRD14	ROLLER	
51	XTW3+6S	SCREW	
53	XTWS3+10T	SCREW	
54	RDF0033	MAGNET HOLDER(A)	
55	RHM245ZA	MAGNET	
56	RMR0334	MAGNET HOLDER(B)	
57	RMR0624-W	DISC HOLDER	
58	RMR0625-W	DISC CLAMPER	
59	XTB3+6JFZ	SCREW	
60	RFKNLCH555PK	DISC TRAY ASS'Y	
61	XTN2+6F	SCREW	
62	RMN0222	LED HOLDER	
63	RMN0253	FL HOLDER	[M]
64	RSC0373	FTZ SHIELD PLATE	[M]
65	RSC0363	FTZ EARTH TERMINAL	[M] (EG)
		INTEGRATED CIRCUITS	
IC1	AN7273W	IC, FM/AM IF	
IC2	LM7001	IC, PLL	
IC3	RVIBA1332L	IC, MPX	
IC501	BA6218	IC, MOTOR DRIVER	
IC801	BA4558FDXE2	IC, OP AMP	[M] (E, GN)
IC802	BA4558FDXE2	IC, OP AMP	[M]
IC803	AN78M05	IC, REGULATOR	⚠
IC901	M38174M8246	IC, MICON	[M]
IC902	LA5608M-TE-L	IC, RESET IC	

Ref No.	Part No.	Part Name & Description	Remarks
		TRANSISTORS	
Q1	2SK544F-AC	TRANSISTOR	(E, GN)
Q1	2SC2787LTA	TRANSISTOR	(EG)
Q2	2SC2786MTA	TRANSISTOR	(E, GN)
Q2	2SC2787LTA	TRANSISTOR	(EG)
Q3	2SC2787FL1TA	TRANSISTOR	(E, GN)
Q3	2SC1740SSTA	TRANSISTOR	(EG)
Q4	2SC2787FL1TA	TRANSISTOR	(E, GN)
Q4	2SA933SSTA	TRANSISTOR	(EG)
Q5	2SC2787LTA	TRANSISTOR	(E, GN)
Q5	2SC1740SSTA	TRANSISTOR	(EG)
Q6	2SC2787LTA	TRANSISTOR	(E, GN)
Q6	2SC1740SSTA	TRANSISTOR	(EG)
Q7	2SC1740SSTA	TRANSISTOR	
Q8	2SC1740SSTA	TRANSISTOR	
Q9	2SD1020HTA	TRANSISTOR	[M]
Q10	2SC1740SSTA	TRANSISTOR	
Q11	2SA933SSTA	TRANSISTOR	
Q12	2SA933SSTA	TRANSISTOR	
Q13	2SC1740SSTA	TRANSISTOR	
Q14	2SC1740SSTA	TRANSISTOR	
Q15	2SC1740SSTA	TRANSISTOR	(EG)
Q16	2SC1740SSTA	TRANSISTOR	(EG)
Q17	2SC1740SSTA	TRANSISTOR	
Q20	2SA933SSTA	TRANSISTOR	(E, GN)
Q21	2SC1740SSTA	TRANSISTOR	(E, GN)
Q22	2SC1740SSTA	TRANSISTOR	(E, GN)
Q23	2SC1740SSTA	TRANSISTOR	(E, GN)
Q501	RVTDTC143EST	TRANSISTOR	
Q502	RVTDTC143EST	TRANSISTOR	
Q801	2SD2037ETA	TRANSISTOR	[M] ⚠
Q802	2SA933SSTA	TRANSISTOR	
Q803	2SB621ARTA	TRANSISTOR	⚠
Q804	2SC2001KTA	TRANSISTOR	
Q805	2SD1273P	TRANSISTOR	
Q806	2SB1185E	TRANSISTOR	
Q807	RVTDTC124EST	TRANSISTOR	[M]
Q808	2SD1020HTA	TRANSISTOR	[M]
Q809	2SD1020HTA	TRANSISTOR	[M]
Q810	2SC2001KTA	TRANSISTOR	
Q811	RVTDTC124EST	TRANSISTOR	[M]
Q812	2SB621ARTA	TRANSISTOR	
Q813	2SA933SSTA	TRANSISTOR	
Q814	2SA933SSTA	TRANSISTOR	
Q901	2SC1740SSTA	TRANSISTOR	
Q903	2SC1740SSTA	TRANSISTOR	
Q904	2SC1740SSTA	TRANSISTOR	

Ref No.	Part No.	Part Name & Description	Remarks
Q905	2SC1740SSTA	TRANSISTOR	
		DIODES	
D1	SVC211SPA-AL	DIODE	(E, GN)
D2	SVC211SPA-AL	DIODE	(E, GN)
D3	SVC211SPA-AL	DIODE	(E, GN)
D4	RVDMTZ5R6CTA	DIODE	[M]
D5	1SS291TA	DIODE	(E, GN)
D5	RVD1SS133TA	DIODE	(EG)
D6	RVD1SS133TA	DIODE	(EG)
D501	MA165TA	DIODE	
D502	RSQGP1S53V	PHOTO INTERRUPTOR	
D503	PT381TB	PHOTO TRANSISTOR	
D504	GL380TB	LED	
D801	1D3E	DIODE	[M] ⚠
D802	1D3E	DIODE	[M] ⚠
D804	1D3E	DIODE	[M] ⚠
D805	1D3E	DIODE	[M] ⚠
D806	RVDMTZ15CTA	DIODE	
D807	RVDMTZ11BTA	DIODE	
D808	1D3E	DIODE	[M] ⚠
D809	1D3E	DIODE	[M] ⚠
D810	MA4270MTA	DIODE	⚠
D811	1D3E	DIODE	[M] ⚠
D812	1D3E	DIODE	[M] ⚠
D814	RVDMTZ5R6CTA	DIODE	[M]
D815	RVDMTZ8R2CTA	DIODE	[M]
D816	RVD1SS133TA	DIODE	
D817	RVD1SS133TA	DIODE	
D818	RVDMTZ6R8ATA	DIODE	[M]
D819	RVD1SS133TA	DIODE	
D820	RVD1SS133TA	DIODE	
D821	RVD1SS133TA	DIODE	
D823	RVDMTZ10BTA	DIODE	
D826	RVDMTZ5R1BTA	DIODE	
D827	RVD1SS133TA	DIODE	
D828	RVD1SS133TA	DIODE	
D829	RVD1SS133TA	DIODE	
D900	RVD1SS133TA	DIODE	
D901	RVD1SS133TA	DIODE	
D902	RVD1SS133TA	DIODE	
D903	RVD1SS133TA	DIODE	
D904	RVD1SS133TA	DIODE	
D905	RVD1SS133TA	DIODE	
D906	RVD1SS133TA	DIODE	
D907	1SS291TA	DIODE	
D908	RVD1SS133TA	DIODE	

Ref No.	Part No.	Part Name & Description	Remarks
D910	RVD1SS133TA	DIODE	
D911	RVD1SS133TA	DIODE	
D912	RVD1SS133TA	DIODE	
D913	RVD1SS133TA	DIODE	
D914	RVD1SS133TA	DIODE	
D917	1SS291TA	DIODE	
D934	RVDMTZ4R7BTA	DIODE	
		VARIABLE RESISTORS	
VR1	EVNDXAA00B14	VR, VOLUME	
VR901	RRV16B24204A	VR, JOG	[M]
		SWITCHES	
S501	RSH2A001-2	SW, UP/DOWN	
S502	RSH1A005	SW, FULL OPEN	
S503	RSH1A005	SW, HALF OPEN	
S901	EVQ21405R	SW, SET	
S902	EVQ21405R	SW, TUNING MODE	
S903	EVQ21405R	SW, FM MODE/BP	
S904	EVQ21405R	SW, TUNER/BAND	
S905	EVQ21405R	SW, CD	
S906	EVQ21405R	SW, AUX	
S907	EVQ21405R	SW, TAPE	
S908	EVQ21405R	SW, CD DISPLAY	
S910	EVQ21405R	SW, OPEN/CLOSE	
S911	EVQ21405R	SW, SKIP	
S912	EVQ21405R	SW, REV SKIP	
S913	EVQ21405R	SW, RANDOM	
S914	EVQ21405R	SW, REPEAT	
S915	EVQ21405R	SW, DISC 1	
S916	EVQ21405R	SW, DISC 2	
S917	EVQ21405R	SW, DISC 3	
S918	EVQ21405R	SW, LAST FADE	
S919	EVQ21405R	SW, ALBUM	
S920	EVQ21405R	SW, J.FIT	
S921	EVQ21405R	SW, PLAY	
S922	EVQ21405R	SW, PAUSE	
S923	EVQ21405R	SW, STOP	
		CONNECTORS	
CN501	RJS1A6714	CONNECTOR (14P)	
CN800	RJS1A5212	CONNECTOR (12P)	[M]
CN802	RJT065K15	CONNECTOR (15P)	
CN803	RJS1A6814	CONNECTOR (14P)	
CN900A	RJS1A6223-1	CONNECTOR (23P)	

Ref No.	Part No.	Part Name & Description	Remarks
CN900B	RJS1A6823	CONNECTOR (23P)	
CN902A	RJS1A6223-1	CONNECTOR (23P)	
CP1	RJP5G9YA	CONNECTOR (05P)	
CP2	RJP9G9YA	CONNECTOR (09P)	
		COILS & TRANSFORMERS	
L1	RLQZP1R2JT-Y	AXIAL COIL	[M] (EG)
L2	RLQZP1R2JT-Y	AXIAL COIL	[M] (E, GN)
L2	RLQZPR22KT-Y	COIL	(EG)
L3	RLQZPR22KT-Y	COIL	(EG)
L4	RLQZP1R2JT-Y	AXIAL COIL	[M] (E, GN)
L4	RLQZPR47KT-Y	AXIAL COIL	(EG)
L5	RLQZP1R2JT-Y	AXIAL COIL	[M] (EG)
L6	SLM1B10-1M	A.B. FILTER	(EG)
L7	RLQZPR22KT-Y	AXIAL COIL	(E, GN)
L7	ELELN822KL	RF CHOKE COIL	(EG)
L8	RLQZPR22KT-Y	AXIAL COIL	(E, GN)
L8	ELELN822KL	RF CHOKE COIL	(EG)
L10	RLQZPR22KT-Y	AXIAL COIL	(E)
L10	RLQZPR33KT-Y	AXIAL COIL	(GN)
L50	RLQZP1R2JT-Y	AXIAL COIL	[M] (E, GN)
L51	RLQZPR47KT-Y	AXIAL COIL	(E, GN)
L803	RLQZP3R3KT-Y	AXIAL COIL	
L804	RLQZP3R3KT-Y	AXIAL COIL	
L901	RLQZP3R3KT-Y	AXIAL COIL	
L902	RLQZP2R2KT-Y	AXIAL COIL	
L903	RLQZP2R2KT-Y	AXIAL COIL	
T1	RLI4B016-Z	FM IFT	[M]
T2	RLI4B015-Z	FM IFT	[M]
T801	RTP1J4G003	FL TRANSFORMER	[M] ⚠
		COMPONENT COMBINATIONS	
Z1	RLA6Z002-T	AM COIL BLOCK	(E, GN)
Z1	ENV17290G1R	FM TUNER PACK	(EG)
Z2	RLI2Z003-T	AM IFT	[M] (E, GN)
Z2	RLA6Z002-T	AM COIL BLOCK	(EG)
Z3	RLI2Z003-T	AM IFT	[M] (EG)
Z801	BL02RN2R65T2	BEAD CORE	
Z802	BL02RN2R65T2	BEAD CORE	
		CERAMIC FILTERS	
CF1	RLFFETWNA01L	FM CF	(E, GN)
CF1	RLFFETNGA01L	FM CF	(EG)
CF2	RLFFETWNA01L	FM CF	(E, GN)
CF2	RLFFETNGA02L	FM CF	(EG)

Ref No.	Part No.	Part Name & Description	Remarks
		OSCILLATORS	
X1	SVQ49U722T-S	7.2 MHZ X'TAL	
X901	RSXZ4M19M01T	4.19MHZ X'TAL	
X902	RSXD32K7S02	32.768KHZ X'TAL	[M]
		DISPLAY TUBE	
FL901	RSL0165-F	FL	[M]
		JACKS	
JK1	RJH8201	JK, ANT TERMINAL	[M] (E, EG)
JK1	RJH5302	JK, ANT TERMINAL	[M] (GN)
JK2	SJS208	JK, AM LOOP ANT TERMINAL	
		WIRES	
W1	REX0586	WIRE ASS'Y (5P)	[M]
W2	REX0587	WIRE ASS'Y (9P)	[M]
		PACKING MATERIALS	
P1	RPF0100	BAG (SET)	[M]
P2	RPN0763	POLYFOAM	[M]
		< SERVO >	
		INTEGRATED CIRCUITS	
IC701	AN8802SCE1V	IC, HEAD AMP	
IC702	MN66271RA	IC, DIGITAL LSI	
IC703	AN8389SE1	IC, 4-CH DRIVER	
		TRANSISTOR	
Q701	2SB709S	TRANSISTOR	
		SWITCH	
S701	RSM0006-P	SW, RESET	
		CONNECTORS	
CN701	RJU035T016-1	CONNECTOR (16P)	
CN702	RJS1A6723-1Q	CONNECTOR (23P)	

Ref No.	Part No.	Part Name & Description	Remarks
		OSCILLATOR	
X701	RSXZ16M9M02T	CERAMIC OSC	
		CHIP JUMPERS	
RJ701	ERJ8GEY0R00A	0 1/10W	
RJ702	ERJ8GEY0R00A	0 1/10W	
RJ703	ERJ8GEY0R00A	0 1/10W	
RJ704	ERJ8GEY0R00A	0 1/10W	
RJ707	ERJ8GEY0R00A	0 1/10W	
RJ708	ERJ8GEY0R00A	0 1/10W	
RJ709	ERJ8GEY0R00A	0 1/10W	
RJ714	ERJ8GEY0R00A	0 1/10W	
RJ715	ERJ8GEY0R00A	0 1/10W	
RJ716	ERJ8GEY0R00A	0 1/10W	
RJ717	ERJ8GEY0R00A	0 1/10W	
RJ721	ERJ6GEY0R00A	0 1/10W	
RJ724	ERJ6GEY0R00A	0 1/10W	
RJ725	ERJ6GEY0R00A	0 1/10W	
RJ726	ERJ6GEY0R00A	0 1/10W	
RJ799	ERJ6GEY0R00A	0 1/10W	
		TEST JUMPERS	
TJ701	EYF8CU	TEST JUMPER	
TJ702	EYF8CU	TEST JUMPER	

RESISTORS & CAPACITORS

Notes :
* Capacitor values are in microfarads (μF) unless specified otherwise, P=Pico-farads (pF), F=Farads.
* Resistance values are in ohms, unless specified otherwise, 1K=1,000 (OHM).
* Bracketed indications in Ref. No. columns specify the area (Refer to the first page for area). Parts without these indications can be used for all areas.
* [M] Indicates in the values & remarks column indicates parts supplied by **MESA**

Ref. No.	Part No.	Values & Remarks
		RESISTORS
R1	ERDS2TJ104T	100K 1/4W(E, GN)
R1	ERDS2TJ332T	3.3K 1/4W(EG)
R2	ERDS2TJ104T	100K 1/4W(E, GN)
R2	ERDS2TJ122T	1.2K 1/4W(EG)
R3	ERDS2TJ470T	47 1/4W(E, GN)
R3	ERDS2TJ684T	680K 1/4W(EG)
R4	ERDS2TJ104T	100K 1/4W(E, GN)
R4	ERDS2TJ824T	820K 1/4W(EG)
R5	ERDS2TJ564T	560K 1/4W(E, GN)
R5	ERDS2TJ391T	390 1/4W(EG)
R6	ERDS2TJ391T	390 1/4W(E, GN)
R6	ERDS2TJ102T	1K 1/4W(EG)
R7	ERDS2TJ561T	560 1/4W(E, GN)
R7	ERDS2TJ471T	470 1/4W(EG)
R8	ERDS2TJ474T	470K 1/4W(E, GN)
R8	ERDS2TJ102T	1K 1/4W(EG)
R9	ERDS2TJ272T	2.7K 1/4W(E, GN)
R9	ERDS2TJ153T	15K 1/4W(EG)
R10	ERDS2TJ102T	1K 1/4W(E, GN)
R10	ERDS2TJ561T	560 1/4W(EG)
R11	ERDS2TJ224T	220K 1/4W(E, GN)
R11	ERDS2TJ102T	1K 1/4W(EG)
R12	ERDS2TJ273T	27K 1/4W(E, GN)
R12	ERDS2TJ103T	10K 1/4W(EG)
R13	ERDS2TJ122T	1.2K 1/4W(E, GN)
R13	ERDS2TJ684T	680K 1/4W(EG)
R14	ERDS2TJ152T	1.5K 1/4W(E, GN)
R14	ERDS2TJ822T	8.2K 1/4W(EG)
R15	ERDS2TJ684T	680K 1/4W(E, GN)
R15	ERDS2TJ331T	330 1/4W(EG)
R16	ERDS2TJ824T	820K 1/4W(E, GN)
R16	ERDS2TJ222T	2.2K 1/4W(EG)
R17	ERDS2TJ391T	390 1/4W(E, GN)
R17	ERDS2TJ183T	18K 1/4W(EG)
R18	ERDS2TJ121T	120 1/4W(E, GN)
R18	ERDS2TJ103T	10K 1/4W(EG)
R19	ERDS2TJ103T	10K 1/4W(E, GN)
R19	ERDS2TJ104T	100K 1/4W(EG)
R20	ERDS2TJ822T	8.2K 1/4W(E, GN)
R20	ERDS2TJ102T	1K 1/4W(EG)
R21	ERDS2TJ102T	1K 1/4W
R22	ERDS2TJ561T	560 1/4W(E, GN)
R22	ERDS2TJ223T	22K 1/4W(EG)
R23	ERDS2TJ183T	18K 1/4W(E, GN)
R23	ERDS2TJ103T	10K 1/4W(EG)
R24	ERDS2TJ153T	15K 1/4W(E, GN)
R24	ERDS2TJ182T	1.8K 1/4W(EG)
R25	ERDS2TJ331T	330 1/4W(E, GN)
R25	ERDS2TJ223T	22K 1/4W(EG)
R26	ERDS2TJ102T	1K 1/4W(E, GN)
R26	ERDS2TJ122T	1.2K 1/4W(EG)
R27	ERDS2TJ104T	100K 1/4W(E, GN)
R27	ERDS2TJ122T	1.2K 1/4W(EG)
R28	ERDS2TJ684T	680K 1/4W(E, GN)
R28	ERDS2TJ102T	1K 1/4W(EG)
R29	ERDS2TJ102T	1K 1/4W(E, GN)
R29	ERDS2TJ182T	1.8K 1/4W(EG)
R30	ERDS2TJ103T	10K 1/4W(E, GN)
R30	ERDS2TJ102T	1K 1/4W(EG)
R31	ERDS2TJ104T	100K 1/4W(E, GN)
R31	ERDS2TJ224T	220K 1/4W(EG)
R32	ERDS2TJ102T	1K 1/4W(E, GN)
R32	ERDS2TJ152T	1.5K 1/4W(EG)
R33	ERDS2TJ562T	5.6K 1/4W(E, GN)
R33	ERDS2TJ152T	1.5K 1/4W(EG)
R34	ERD25TJ102T	1K 1/4W(E, GN)
R34	ERDS2TJ683T	68K 1/4W(EG)
R35	ERDS2TJ182T	1.8K 1/4W(E, EG)
R35	ERDS2TJ102T	1K 1/4W(EG)
R36	ERDS2TJ562T	5.6K 1/4W(EG)
R37	ERDS2TJ562T	5.6K 1/4W(EG)
R38	ERDS2TJ562T	5.6K 1/4W(EG)
R39	ERDS2TJ562T	5.6K 1/4W(EG)
R40	ERDS2TJ103T	10K 1/4W(E, GN)
R40	ERDS2TJ562T	5.6K 1/4W(EG)
R41	ERDS2TJ182T	1.8K 1/4W(E, GN)
R41	ERDS2TJ102T	1K 1/4W(EG)
R42	ERDS2TJ223T	22K 1/4W(E, GN)
R42	ERDS2TJ102T	1K 1/4W(EG)
R43	ERDS2TJ122T	1.2K 1/4W(E, GN)
R43	ERDS2TJ561T	560 1/4W(EG)
R44	ERDS2TJ561T	560 1/4W(EG)
R45	ERDS2TJ223T	22K 1/4W(E, GN)
R45	ERDS2TJ103T	10K 1/4W(EG)
R46	ERDS2TJ103T	10K 1/4W(E, GN)
R46	ERDS2TJ473T	47K 1/4W(EG)
R47	ERDS2TJ473T	47K 1/4W(E, GN)
R47	ERDS2TJ104T	100K 1/4W(EG)
R48	ERDS2TJ104T	100K 1/4W(E, GN)
R48	ERDS2TJ681T	680 1/4W(EG)
R49	ERDS2TJ102T	1K 1/4W(E, GN)
R50	ERDS2TJ562T	5.6K 1/4W(E, GN)
R50	ERDS2TJ103T	10K 1/4W(EG)
R51	ERDS2TJ153T	15K 1/4W
R52	ERDS2TJ561T	560 1/4W
R53	ERDS2TJ102T	1K 1/4W
R54	ERDS2TJ562T	5.6K 1/4W(EG)
R55	ERDS2TJ562T	5.6K 1/4W(EG)
R56	ERDS2TJ102T	1K 1/4W(EG)
R58	ERDS2TJ151T	150 1/4W
R59	ERDS2TJ103T	10K 1/4W(EG)
R60	ERDS2TJ103T	10K 1/4W
R61	ERDS2TJ103T	10K 1/4W
R62	ERDS2TJ103T	10K 1/4W(EG)
R63	ERDS2TJ104T	100K 1/4W(EG)
R64	ERDS2TJ103T	10K 1/4W(E, GN)
R64	ERDS2TJ104T	100K 1/4W(EG)
R65	ERDS2TJ103T	10K 1/4W(E, GN)
R65	ERDS2TJ104T	100K 1/4W(EG)
R66	ERDS2TJ103T	10K 1/4W(E, GN)
R66	ERDS2TJ562T	5.6K 1/4W(EG)
R67	ERDS2TJ102T	1K 1/4W(E, GN)
R67	ERDS2TJ824T	820K 1/4W(EG)
R68	ERDS2TJ224T	220K 1/4W(E, GN)
R68	ERDS2TJ104T	100K 1/4W(EG)
R69	ERDS2TJ681T	680 1/4W(E, GN)
R69	ERDS2TJ271T	270 1/4W(EG)
R70	ERDS2TJ562T	5.6K 1/4W(EG)
R71	ERDS2TJ681T	680 1/4W(E, GN)
R71	ERDS2TJ121T	120 1/4W(EG)
R72	ERDS2TJ683T	68K 1/4W(E, GN)
R72	ERDS2TJ104T	100K 1/4W(EG)
R73	ERDS2TJ102T	1K 1/4W(E, GN)
R73	ERDS2TJ684T	680K 1/4W(EG)
R74	ERDS2TJ562T	5.6K 1/4W(E, GN)
R74	ERDS2TJ684T	680K 1/4W(EG)
R75	ERDS2TJ562T	5.6K 1/4W(E, GN)
R75	ERDS2TJ103T	10K 1/4W(EG)
R76	ERDS2TJ562T	5.6K 1/4W(E, GN)
R76	ERDS2TJ222T	2.2K 1/4W(EG)
R77	ERDS2TJ104T	100K 1/4W(E, GN)
R77	ERDS2TJ222T	2.2K 1/4W(EG)
R78	ERDS2TJ822T	8.2K 1/4W(E, GN)
R80	ERDS2TJ824T	820K 1/4W(E, GN)
R81	ERDS2TJ181T	180 1/4W(E, GN)
R82	ERDS2TJ562T	5.6K 1/4W(E, GN)
R83	ERDS2TJ122T	1.2K 1/4W(E, GN)
R85	ERDS2TJ103T	10K 1/4W(E, GN)
R86	ERDS2TJ104T	100K 1/4W(E, GN)

Ref. No.	Part No.	Values & Remarks		Ref. No.	Part No.	Values & Remarks		Ref. No.	Part No.	Values & Remarks	
R87	ERDS2TJ104T	100K	1/4W(E, GN)	R855	ERDS2TJ102T	1K	1/4W	R954	ERDS2TJ223T	22K	1/4W
R88	ERDS2TJ104T	100K	1/4W(E, GN)	R856	ERDS2TJ102T	1K	1/4W	R956	ERDS2TJ223T	22K	1/4W
R99	ERDS2TJ222T	2.2K	1/4W(E, GN)	R857	ERDS2TJ223T	22K	1/4W	R957	ERDS2TJ223T	22K	1/4W
R501	ERDS2TJ271	270	1/4W	R858	ERDS2TJ103T	10K	1/4W	R958	ERDS2TJ223T	22K	1/4W
R801	ERDS2TJ104T	100K	1/4W	R859	ERDS2TJ222T	2.2K	1/4W	R959	ERDS2TJ102T	1K	1/4W
R802	ERDS2TJ104T	100K	1/4W	R860	ERDS2TJ222T	2.2K	1/4W	R960	ERDS2TJ102T	1K	1/4W
R803	ERDS2TJ103T	10K	1/4W(E, GN)	R870	ERDS2TJ330T	33	1/4W	R961	ERDS2TJ102T	1K	1/4W
R804	ERDS2TJ103T	10K	1/4W(E, GN)	R901	ERDS2TJ153T	15K	1/4W	R962	ERDS2TJ102T	1K	1/4W
R806	ERDS2TJ330T	33	1/4W	R902	ERDS2TJ153T	15K	1/4W	R963	ERDS2TJ102T	1K	1/4W
R807	ERDS2TJ330T	33	1/4W	R903	ERDS2TJ153T	15K	1/4W	R964	ERDS2TJ102T	1K	1/4W
R808	ERDS2TJ330T	33	1/4W	R904	ERDS2TJ152T	1.5K	1/4W	R965	ERDS2TJ102T	1K	1/4W
R809	ERDS2TJ223T	22K	1/4W(E, GN)	R905	ERDS2TJ222T	2.2K	1/4W	R966	ERDS2TJ101T	100	1/4W
R810	ERDS2TJ223T	22K	1/4W(E, GN)	R906	ERDS2TJ272T	2.7K	1/4W	R967	ERDS2TJ102T	1K	1/4W
R811	ERDS2TJ471T	470	1/4W	R907	ERDS2TJ392T	3.9K	1/4W	R968	ERDS2TJ223T	22K	1/4W
R812	ERDS2TJ101T	100	1/4W	R908	ERDS2TJ562T	5.6K	1/4W	R969	ERDS2TJ223T	22K	1/4W
R813	ERDS2TJ122T	1.2K	1/4W	R909	ERDS2TJ822T	8.2K	1/4W	R970	ERDS2TJ103T	10K	1/4W
R814	ERDS2TJ102T	1K	1/4W	R910	ERDS2TJ153T	15K	1/4W	R971	ERDS2TJ222T	2.2K	1/4W
R816	ERDS2TJ470T	47	1/4W	R912	ERDS2TJ152T	1.5K	1/4W	R972	ERDS2TJ103T	10K	1/4W
R817	ERDS2TJ101T	100	1/4W	R913	ERDS2TJ222T	2.2K	1/4W	R973	ERDS2TJ103T	10K	1/4W
R818	ERDS2TJ152T	1.5K	1/4W	R914	ERDS2TJ272T	2.7K	1/4W	R974	ERDS2TJ104T	100K	1/4W
R819	ERDS2TJ122T	1.2K	1/4W	R915	ERDS2TJ392T	3.9K	1/4W	R975	ERDS2TJ104T	100K	1/4W
R820	ERDS1FVJ181T	180	1/2W ⚠	R916	ERDS2TJ562T	5.6K	1/4W	R976	ERDS2TJ104T	100K	1/4W
R821	ERDS2TJ101T	100	1/4W	R917	ERDS2TJ822T	8.2K	1/4W	R977	ERDS2TJ104T	100K	1/4W
R822	ERDS1FVJ391T	390	1/2W ⚠	R918	ERDS2TJ153T	15K	1/4W	R978	ERDS2TJ104T	100K	1/4W
R824	ERDS2TJ331T	330	1/4W	R919	ERDS2TJ152T	1.5K	1/4W	R979	ERDS2TJ104T	100K	1/4W
R825	ERDS2TJ103T	10K	1/4W	R920	ERDS2TJ222T	2.2K	1/4W	R980	ERDS2TJ104T	100K	1/4W
R826	ERDS2TJ103T	10K	1/4W	R921	ERDS2TJ272T	2.7K	1/4W	R981	ERDS2TJ104T	100K	1/4W
R827	ERDS2TJ103T	10K	1/4W	R922	ERDS2TJ392T	3.9K	1/4W	R983	ERDS2TJ106T	10M	1/4W
R828	ERDS2TJ101T	100	1/4W	R923	ERDS2TJ562T	5.6K	1/4W				
R829	ERDS2TJ122T	1.2K	1/4W	R924	ERDS2TJ101T	100	1/4W			**CAPACITORS**	
R830	ERDS2TJ330T	33	1/4W	R925	ERDS2TJ101T	100	1/4W				
R831	ERDS2TJ332T	3.3K	1/4W	R926	ERDS2TJ222T	2.2K	1/4W	C1	ECBT1H6R8KC5	6.8P	50V(E, GN)
R832	ERDS2TJ222T	2.2K	1/4W	R927	ERDS2TJ222T	2.2K	1/4W	C1	ECEA1CU330B	33	16V(EG)
R833	ERDS2TJ271T	270	1/4W	R928	ERDS2TJ222T	2.2K	1/4W	C2	ECBT1H102KB5	1000P	50V(E, GN)
R834	ERD25FVJ6R8T	6.8	1/4W	R929	ERDS2TJ103T	10K	1/4W	C2	ECBT1C103MS5	0.01	16V(EG)
R835	ERDS2TJ821T	820	1/4W	R931	ERDS2TJ103T	10K	1/4W	C3	ECBT1H102KB5	1000P	50V(E, GN)
R836	ERDS2TJ104T	100K	1/4W	R932	ERDS2TJ102T	1K	1/4W	C3	ECBT1C103MS5	0.01	16V(EG)
R837	ERDS2TJ104T	100K	1/4W	R933	ERDS2TJ104T	100K	1/4W	C4	ECBT1H3R3KC5	3.3P	50V(E, GN)
R838	ERDS2TJ223T	22K	1/4W	R934	ERDS2TJ820T	82	1/4W	C4	ECBT1H102KB5	1000P	50V(EG)
R839	ERDS2TJ223T	22K	1/4W	R935	ERDS2TJ104T	100K	1/4W	C5	ECBT1H102KB5	1000P	50V(E, GN)
R840	ERDS2TJ223T	22K	1/4W	R936	ERDS2TJ331T	330	1/4W	C5	ECBT1H470J5	47P	50V(EG)
R841	ERDS2TJ223T	22K	1/4W	R937	ERDS2TJ183T	18K	1/4W	C6	ECBT1H2R7KC5	2.7P	50V(E)
R842	ERDS2TJ273T	27K	1/4W	R938	ERDS2TJ823T	82K	1/4W	C6	ECBT1C103MS5	0.01	16V(EG)
R843	ERDS2TJ273T	27K	1/4W	R939	ERDS2TJ473T	47K	1/4W	C6	ECBT1H3R9KC5	3.9P	50V(GN)
R844	ERDS2TJ332T	3.3K	1/4W	R940	ERDS2TJ473T	47K	1/4W	C7	ECBT1H120JC5	12P	50V(E, GN)
R845	ERDS2TJ332T	3.3K	1/4W	R943	ERDS2TJ101T	100	1/4W	C8	ECBT1H181KB5	180P	50V(E, GN)
R846	ERDS2TJ222T	2.2K	1/4W	R944	ERDS2TJ101T	100	1/4W	C8	ECBT1H150JC5	15P	50V(EG)
R847	ERDS2TJ103T	10K	1/4W	R945	ERDS2TJ683T	68K	1/4W	C9	ECBT1H3R3KC5	3.3P	50V(E, GN)
R849	ERDS2TJ222T	2.2K	1/4W	R948	ERDS2TJ472T	4.7K	1/4W	C9	ECEA0JU101B	100	6.3V(EG)
R850	ERDS2TJ103T	10K	1/4W	R949	ERDS2TJ472T	4.7K	1/4W	C10	ECBT1H102KB5	1000P	50V(E, GN)
R851	ERDS2TJ153T	15K	1/4W	R950	ERDS2TJ681T	680	1/4W	C10	ECEA1CKA100B	10	16V(EG)
R852	ERDS2TJ330T	33	1/4W	R951	ERDS2TJ334T	330K	1/4W	C11	ECBT1H102KB5	1000P	50V(E, GN)
R853	ERDS2TJ470T	47	1/4W	R952	ERDS2TJ103T	10K	1/4W	C11	ECBT1C103MS5	0.01	16V(EG)
R854	ERDS2TJ470T	47	1/4W	R953	ERDS2TJ102T	1K	1/4W	C12	ECBT1H6R8KC5	6.8P	50V(E, GN)

Ref. No.	Part No.	Values & Remarks
C12	ECKR1H223ZF5	0.022 50V(EG)
C13	ECBT1H5R6KC5	5.6P 50V(E, GN)
C13	ECKR1H223ZF5	0.022 50V(EG)
C14	ECBT1H180JC5	18P 50V(E, GN)
C14	ECBT1C103MS5	0.01 16V(EG)
C15	ECBT1H102KB5	1000P 50V(E, GN)
C15	ECEA1CKA100B	10 16V(EG)
C16	ECBT1H102KB5	1000P 50V(E, GN)
C16	ECBT1C103MS5	0.01 16V(EG)
C17	ECBT1C103MS5	0.01 16V(E, GN)
C17	ECBT1H150JC5	15P 50V(EG)
C18	ECBT1H101KB5	100P 50V(E, GN)
C18	ECEA1HKA010B	1 50V(EG)
C19	ECBT1C103MS5	0.01 16V
C20	ECEA1CKA100B	10 16V
C21	ECBT1H150JC5	15P 50V(E, GN)
C21	ECBT1H101KB5	100P 50V(EG)
C22	ECBT0J223NS5	0.022 6.3V(E, GN)
C22	ECBT1E223ZF5	0.022 25V(EG)
C23	ECBT0J223NS5	0.022 6.3V(E)
C23	ECBT1C103MS5	0.01 16V(EG)
C23	ECBT1E223ZF5	0.022 25V(GN)
C24	ECBT1C103MS5	0.01 16V(E, GN)
C24	ECEA1HKAR47B	0.47 50V(EG)
C25	ECEA1CKA100B	10 16V(E, GN)
C25	ECBT1C103MS5	0.01 16V(EG)
C26	ECEA0JU101B	100 6.3V(E, GN)
C26	ECBT0J223NS5	0.022 6.3V(EG)
C27	ECBT0J223NS5	0.022 6.3V(E, GN)
C27	ECBT1H471KB5	470P 50V(EG)
C28	ECBT1C103MS5	0.01 16V(E, GN)
C28	ECEA1HKA010B	1 50V(EG)
C29	ECEA1HKAR47B	0.47 50V(E, GN)
C29	ECFR1C473MR	0.047 16V(EG)
C30	ECEA1HKA010B	1 50V(E, GN)
C30	ECBT1H100JC5	10P 50V(EG)
C31	ECBT1H101KB5	100P 50V(E, GN)
C31	ECBT1C103MS5	0.01 16V(EG)
C32	ECEA1CU100B	10 16V(E, GN)
C32	ECEA1HU010B	1 50V(EG)
C33	ECBT0J223NS5	0.022 6.3V(E, GN)
C33	ECEA1HKAR47B	0.47 50V(EG)
C34	ECBT1C103MS5	0.01 16V(E, GN)
C34	ECEA1HKAR33B	0.33 50V(EG)
C35	ECBT1H150JC5	15P 50V(E, GN)
C35	ECQP1102JZT	1000P 100V(EG)
C36	ECBT1C103MS5	0.01 16V(E, GN)
C36	ECFR1C103MR	0.01 16V(EG)
C37	ECBT1C103MS5	0.01 16V
C38	ECFR1C103MR	0.01 16V(E, GN)
C38	ECEA1CU101B	100 16V(EG)
C39	ECBT1C103MS5	0.01 16V(E, GN)
C39	ECBT0J153MS5	0.015 6.3V(EG)
C40	ECBT1H100JC5	10P 50V(E, GN)

Ref. No.	Part No.	Values & Remarks
C40	ECBT0J153MS5	0.015 6.3V(EG)
C41	ECFR1C473KR	0.047 16V(E, GN)
C41	ECEA1HKA010B	1 50V(EG)
C42	ECEA1HKA010B	1 50V(EG)
C43	ECBT1C103MS5	0.01 16V(E, GN)
C43	ECBT1H102KB5	1000P 50V(EG)
C44	ECBT1C103MS5	0.01 16V(E, GN)
C44	ECBT1H102KB5	1000P 50V(EG)
C45	ECBT1C103MS5	0.01 16V(E, GN)
C45	ECBT1C822KS5	8200P 16V(EG)
C46	ECBT1C103MS5	0.01 16V(E, GN)
C46	ECBT1C822KS5	8200P 16V(EG)
C47	ECBT1C103MS5	0.01 16V(EG)
C48	ECBT1H102KB5	1000P 50V
C49	ECBT1H102KB5	1000P 50V
C50	ECBT1C103MS5	0.01 16V
C51	ECEA1CU330B	33 16V(E, GN)
C51	ECBT1C103MS5	0.01 16V(EG)
C52	ECBT1C103MS5	0.01 16V
C53	ECEA25M4R7RB	4.7 25V
C54	ECBT1H102KB5	1000P 50V(E, GN)
C54	ECEA1CU330B	33 16V(EG)
C55	ECBT1H102KB5	1000P 50V(E, GN)
C55	ECBT1H150JC5	15P 50V(EG)
C56	ECBT1H150JC5	15P 50V(EG)
C57	ECEA0JU221B	220 6.3V
C58	ECBT1H102KB5	1000P 50V
C59	ECBT1H102KB5	1000P 50V
C60	ECBT1H181KB5	180P 50V
C61	ECBT1C103MS5	0.01 16V(E, GN)
C62	ECBT1H150JC5	15P 50V(E, GN)
C62	ECBT1H471KB5	470P 50V(EG)
C63	ECBT1H150JC5	15P 50V(E, GN)
C63	ECBT1C103MS5	0.01 16V(EG)
C64	ECBT1H102KB5	1000P 50V(E, GN)
C64	ECBT1C103MS5	0.01 16V(EG)
C65	ECBT1H471KB5	470P 50V(E, GN)
C65	ECBT1H102KB5	1000P 50V(EG)
C66	ECEA1HKAR33B	0.33 50V(E, GN)
C67	ECQP1102JZT	1000P 100V(E, GN)
C67	ECEA1HKA3R3B	3.3 50V(EG)
C68	ECFR1C103MR	0.01 16V(E, GN)
C68	ECEA1HKA3R3B	3.3 50V(EG)
C69	ECEA1CU101B	100 16V(E, GN)
C69	ECBT1H102KB5	1000P 50V(EG)
C70	ECEA1HKA010B	1 50V(E, GN)
C70	ECBT1H102KB5	1000P 50V(EG)
C71	ECBT1C103MS5	0.01 16V
C72	ECEA1HUR47B	0.47 50V(E, GN)
C72	ECEA1HKA010B	1 50V(EG)
C73	ECEA1HU010B	1 50V(E, GN)
C73	ECBT1H470J5	47P 50V(EG)
C74	ECEA1HKA010B	1 50V(E, GN)
C75	ECEA1HKA010B	1 50V(E, GN)

Ref. No.	Part No.	Values & Remarks
C76	ECEA1HKA010B	1 50V(E, GN)
C77	ECBT0J153MS5	0.015 6.3V(E, GN)
C78	ECBT0J153MS5	0.015 6.3V(E, GN)
C79	ECBT1C103MS5	0.01 16V(E, GN)
C80	ECBT1C103MS5	0.01 16V(E, GN)
C81	ECBT1C103MS5	0.01 16V(E, GN)
C501	ECA1AKF820E	82 10V
C801	ECEA1HU010B	1 50V
C805	ECBT1H101KB5	100P 50V(E, GN)
C806	ECBT1H101KB5	100P 50V(E, GN)
C807	ECBT1E103ZF5	0.01 25V
C808	ECBT1E103ZF5	0.01 25V
C809	ECEA1CU101B	100 16V
C810	ECEA1CU470B	47 16V
C811	ECBT1H102KB5	1000P 50V
C812	ECBT1H102KB5	1000P 50V
C813	ECKR1H103ZF5	0.01 50V ⚠
C814	ECKR1H103ZF5	0.01 50V
C815	ECEA1HU470B	47 50V
C817	ECKR1H103ZF5	0.01 50V ⚠
C818	ECKR1H103ZF5	0.01 50V
C819	ECKR1H103ZF5	0.01 50V
C820	ECKR1H103ZF5	0.01 50V
C821	ECEA1AU101B	100 10V
C822	ECBT1E103ZF5	0.01 25V
C823	ECEA1CU222E	2200 16V
C824	ECKR1H103ZF5	0.01 50V
C825	ECEA1AU101B	100 10V
C826	ECEA1HU010B	1 50V
C828	ECEA1AU101B	100 10V
C829	ECBT1E103ZF5	0.01 25V
C830	ECBT1E103ZF5	0.01 25V
C831	ECBT1H331KB5	330P 50V
C832	ECBT1H331KB5	330P 50V
C833	ECBT1H121KB5	120P 50V
C834	ECBT1H121KB5	120P 50V
C837	ECEA1EU102E	1000 25V
C838	ECEA1EU101B	100 25V
C839	ECBT1H102KB5	1000P 50V
C840	ECBT1H102KB5	1000P 50V
C842	ECBT1E103ZF5	0.01 25V
C843	ECEA1HKA010B	1 50V
C845	ECEA1HU010B	1 50V
C846	ECEA1HKA010B	1 50V
C847	ECEA1EKA4R7B	4.7 25V
C850	ECQV1H334JZ3	0.33 50V
C851	ECBT1H101KB5	100P 50V
C852	ECBT1H101KB5	100P 50V
C901	ECEA1HKAR33B	0.33 50V
C902	ECBT1C103MS5	0.01 16V
C903	ECBT0J223NS5	0.022 6.3V
C904	ECEA1HKAR22B	0.22 50V
C905	EECS5R5H473	0.047 5.5V
C906	ECBT1H102KB5	1000P 50V

Ref. No.	Part No.	Values & Remarks
C907	ECEA0JU102B	1000 6.3V
C908	ECBT1H561KB5	560P 50V
C909	ECBT1H561KB5	560P 50V
C910	ECBT1H561KB5	560P 50V
C911	ECEA0JKA101B	100 6.3V
C912	ECBT1H102KB5	1000P 50V
C913	ECBT1H101KB5	100P 50V
C914	ECBT1H101KB5	100P 50V
C915	ECEA1HKA3R3B	3.3 50V
C916	ECEA1HKA3R3B	3.3 50V
C917	ECEA1HKA010B	1 50V
C918	ECBT1H102KB5	1000P 50V
C919	ECBT1H560J5	56P 50V
C920	ECBT1H560J5	56P 50V
C921	ECBT1H680J5	68P 50V
C922	ECBT1H680J5	68P 50V
C923	ECBT1H220JC5	22P 50V
C924	ECBT1H180JC5	18P 50V
C925	ECBT1C103MS5	0.01 16V
C926	ECBT1H101KB5	100P 50V
C927	ECBT1C103MS5	0.01 16V
C928	ECBT1C103MS5	0.01 16V
C930	ECBT1C103MS5	0.01 16V
C931	ECBT1C103MS5	0.01 16V
C932	ECBT1C103MS5	0.01 16V
C933	ECBT1H102KB5	1000P 50V
C934	ECBT1H102KB5	1000P 50V
		< SERVO >
		RESISTORS
R701	ERJ6GEYJ100	10 1/10W
R702	ERJ6GEYJ471V	470 1/10W
R703	ERJ6GEYJ823	82K 1/10W
R704	ERJ6GEYJ102A	1K 1/10W
R705	ERJ6GEYJ103V	10K 1/10W
R706	ERJ6GEYJ102A	1K 1/10W
R707	ERJ6GEYJ473V	47K 1/10W
R708	ERJ6GEYJ104V	100K 1/10W
R709	ERJ6GEYJ683V	68K 1/10W
R711	ERJ6GEYJ154V	150K 1/10W
R712	ERJ6GEYJ221V	220 1/10W
R714	ERJ6GEY0R00A	0 1/10W
R717	ERJ6GEYJ102A	1K 1/10W
R718	ERJ6GEYJ102A	1K 1/10W
R719	ERJ6GEYJ102A	1K 1/10W
R720	ERJ6GEYJ102A	1K 1/10W
R721	ERJ6GEYJ101V	100 1/10W
R722	ERJ6GEYJ563V	56K 1/10W
R723	ERJ6GEYJ182V	1.8K 1/10W
R724	ERJ6GEYJ333V	33K 1/10W
R725	ERJ6GEYJ472V	4.7K 1/10W
R726	ERJ6GEYJ473V	47K 1/10W
R727	ERJ6GEYJ103V	10K 1/10W

Ref. No.	Part No.	Values & Remarks
R728	ERJ6GEYJ392V	3.9K 1/10W
R730	ERJ6GEYJ331V	330 1/10W
R731	ERJ6GEYJ392V	3.9K 1/10W
R734	ERJ6GEYJ101V	100 1/10W
R735	ERJ6GEYJ101V	100 1/10W
R736	ERJ6GEYJ101V	100 1/10W
R738	ERJ6GEYJ223V	22K 1/10W
R739	ERJ6GEYJ681V	680 1/10W
R741	ERJ6GEYJ562V	5.6K 1/10W
R742	ERJ6GEYJ562V	5.6K 1/10W
R743	ERJ6GEYJ562V	5.6K 1/10W
R744	ERJ6GEYJ103V	10K 1/10W
R745	ERJ6GEYJ155V	1.5M 1/10W
R748	ERJ6GEYJ182V	1.8K 1/10W
R749	ERJ8GEYJ103V	10K 1/8W
		CAPACITORS
C701	ECEA0JKA220	22 6.3V
C702	ECEA1HKA010I	1 50V
C703	ECEA0JKA101I	100 6.3V
C704	ECUZ1E104MBN	0.1 25V
C705	ECEA1HKA010I	1 50V
C706	ECUE1H101JCN	100P 50V
C707	ECUV1E273KBN	0.027 25V
C708	ECUE1H472KBN	4700P 50V
C709	ECUE1C473KBN	0.047 16V
C710	ECUE1H152KBN	1500P 50V
C711	ECUZ1E104MBN	0.1 25V
C712	ECUZ1E104MBN	0.1 25V
C713	ECUV1C104MBM	0.1 16V
C714	ECEA0JKA101I	100 6.3V
C715	ECEA0JKA470I	47 6.3V
C716	ECUE1H561KBN	560P 50V
C717	ECUZ1E104MBN	0.1 25V
C718	ECUV1C224KBM	0.22 16V
C721	ECUE1H270JCN	27P 50V
C722	ECUE1H270JCN	27P 50V
C723	ECEA1AKA221I	220 10V
C724	ECUV1C104MBM	0.1 16V
C725	ECUE1H102KBN	1000P 50V
C726	ECUE1H102KBN	1000P 50V
C727	ECEA1HPK010I	1 50V
C728	ECEA1HPK010I	1 50V
C730	ECUZ1E104MBN	0.1 25V
C731	ECEA0JK221I	220 6.3V
C732	ECEA0JK221I	220 6.3V
C733	ECUZ1E104MBN	0.1 25V
C734	ECEA1AKA221I	220 10V
C735	ECUZNE104MBN	0.1 25V
C736	ECUZNE104MBN	0.1 25V
C737	ECUZNE104MBN	0.1 25V
C738	ECUV1C154KBN	0.15 16V
C742	ECUV1E273KBN	0.027 25V

Ref. No.	Part No.	Values & Remarks
C743	ECUZNE104MBN	0.1 25V
C744	ECUE1E822KBN	8200P 25V
C745	ECUE1C473MBN	0.047 16V
C746	ECUE1H050DCN	5P 50V
C747	ECUE1H222KBN	2200P 50V
C748	ECUV1H471KBM	470P 50V

MESA Printed in Singapore
P940412800 P/A/J/S