COMPONENT
MAP
POWER SUPPLY

PMF 3150

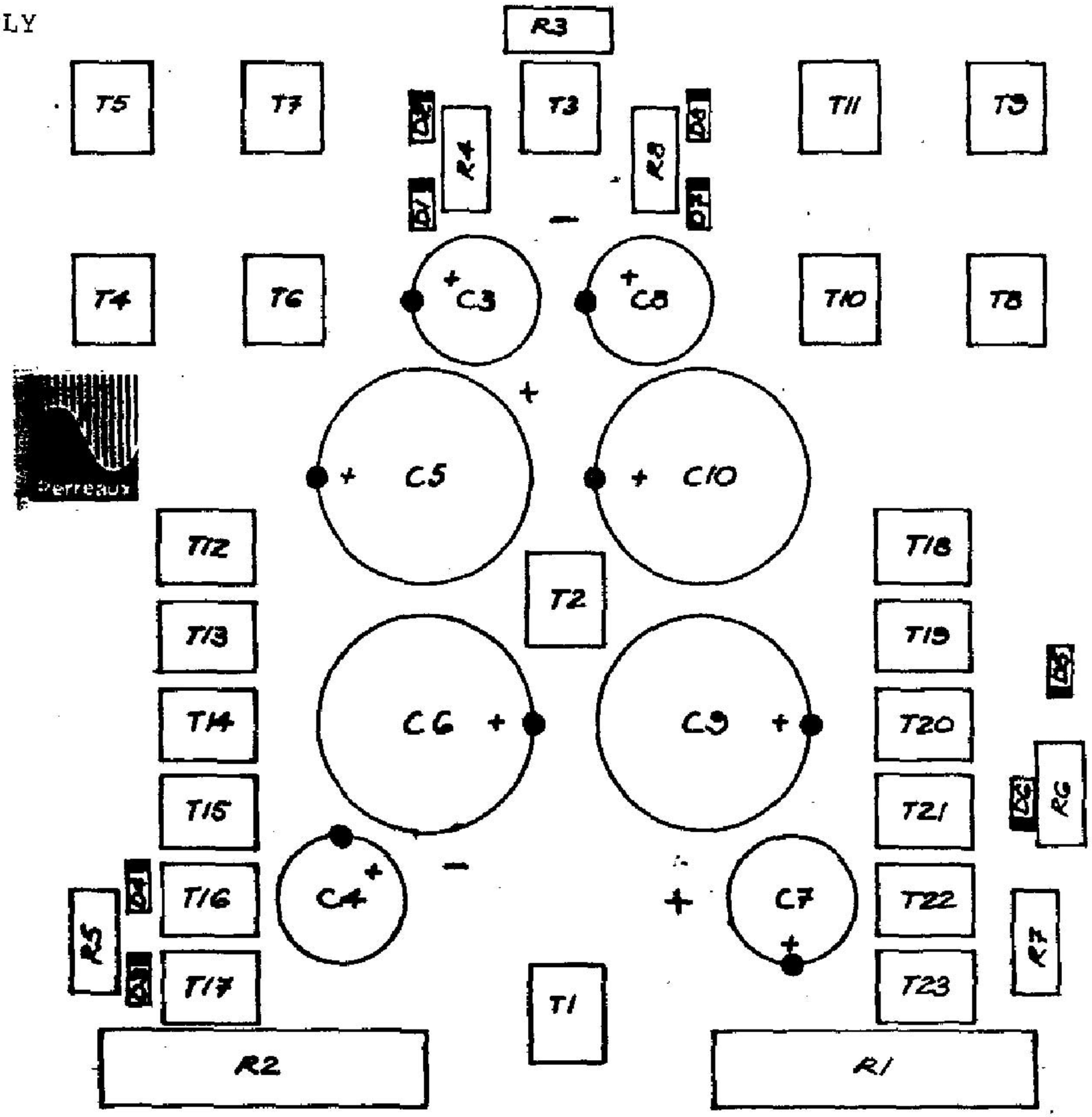

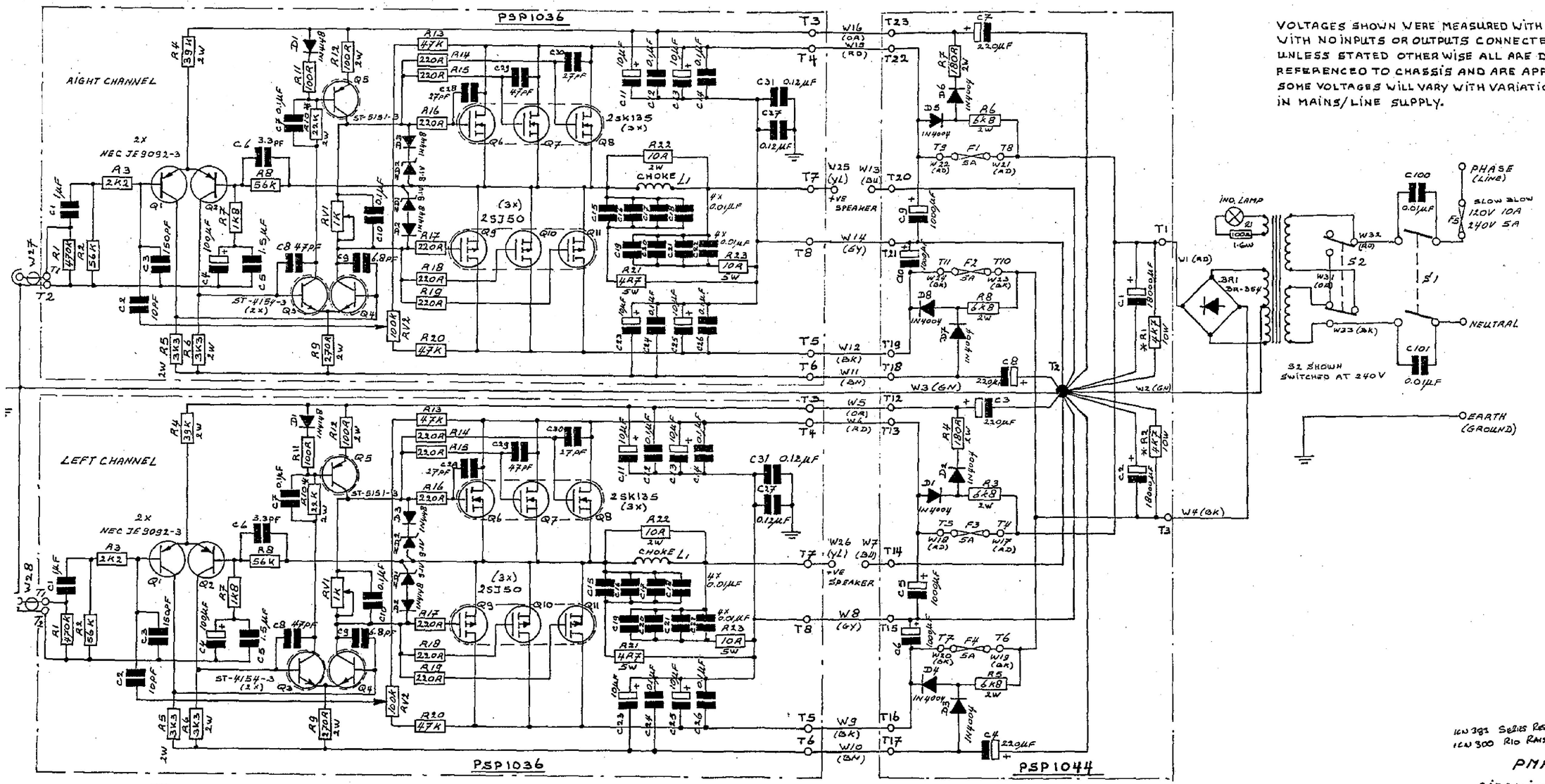

VOLTAGES SHOWN WERE MEASURED WITH A FLUKE MODEL 77 WITH NO INPUTS OR OUTPUTS CONNECTED. UNLESS STATED OTHERWISE ALL ARE D.C. VOLTS, REFERENCED TO CHASSIS AND ARE APPROXIMATE ONLY. SOME VOLTAGES WILL VARY WITH VARIATIONS IN MAINS/LINE SUPPLY.

PROPRIETARY WARNING
THIS DOCUMENT, PRINT OR ARTICLE CONTAINS PATENTED, COPYRIGHT AND PROTECTED DESIGNS MATERIAL INFORMATION AND DATA OWNED BY PERREAUX SOUND LTD AND IS NOT FOR SALE OR OTHER DISPOSITION, ALTERATION, DUPLICATION, COPY APPLICATION OR USE EITHER WHOLLY OR PARTLY PUBLICLY PRIVATELY WHERESOEVER AND HOWSOEVER WITHOUT EXPRESSLY THE WRITTEN CONSENT OF PERREAUX SOUND LTD FIRST OBTAINED. ANY UNAUTHORISED BREACH OR ATTEMPTED BREACH OF THIS WARNING WILL BE LEGALLY ACTIONABLE.

* RESISTORS MARKED THUS ARE MOUNTED ABOVE THE SURFACE OF THE P.C.B.

1CW 393 SERIES RESISTOR ADDED TO MAINS IND. ISSUE C.
1CW 300 R10 RAISED 21.5.86 ISSUE B.

PMF 3150
CIRCUIT DIAGRAM
(SEE INFORMATION DRG.Nº 3/1285)

L/1284