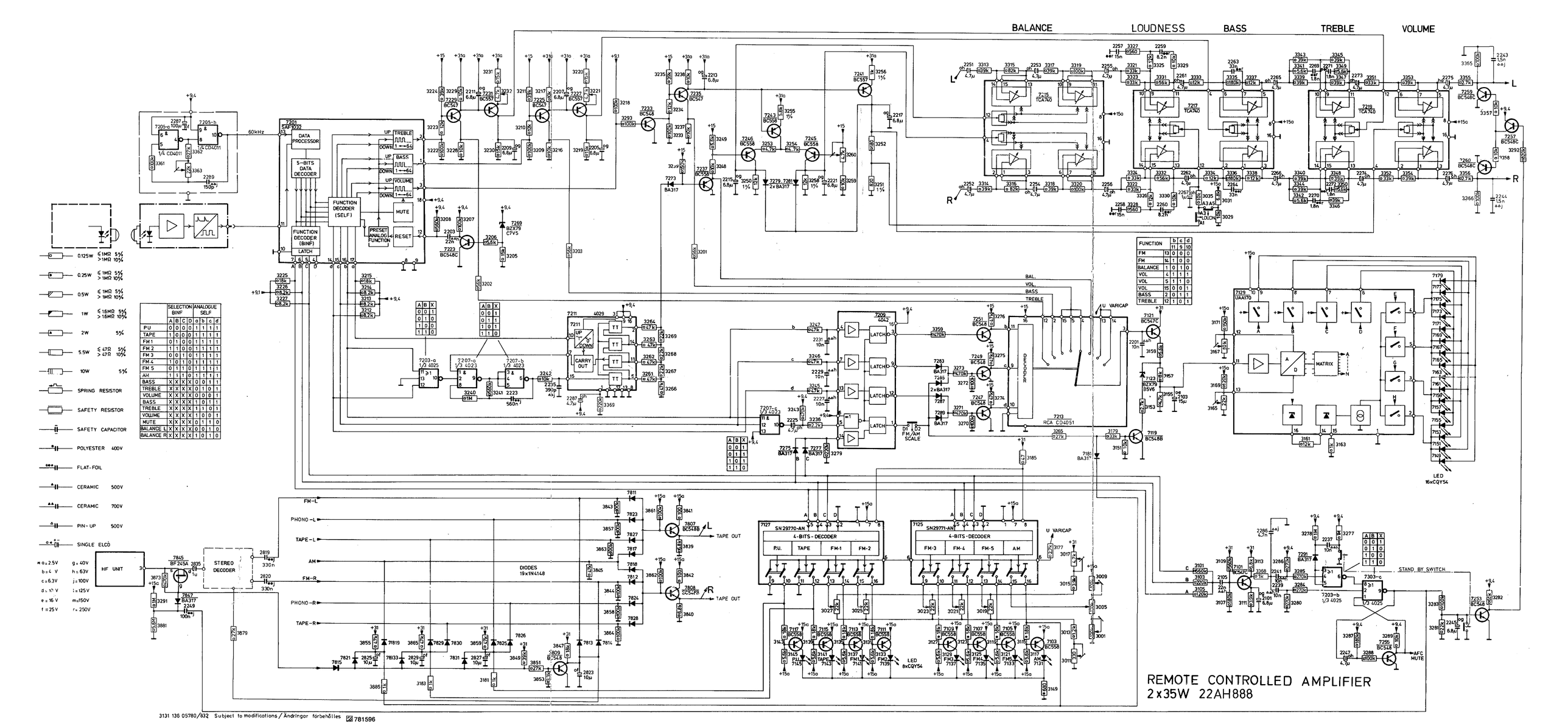
BALANCE
LOUDNESS
BASS
TREBLE
VOLUME
REMOTE CONTROLLED AMPLIFIER
2x35W 22AH888
HF UNIT
STEREO DECODER
DIODES 19x1N4148
4-BITS-DECODER
SN29770-AN
SN29771-AN
FM-L
PHONO-L
TAPE-L
AM
FM-R
PHONO-R
TAPE-R
TAPE OUT
STAND BY SWITCH
AFC MUTE
LED 16xCQY54
LED 8xCQY54
FUNCTION DECODER (SELF)
FUNCTION DECODER (BINF)
DATA PROCESSOR
5-BITS DATA DECODER
LATCH
MUTE
RESET
PRESET ANALOG FUNCTION
CARRY OUT
MATRIX
DECODER
U VARICAP
BAL.
VOL.
BASS
TREBLE
0.125W ≤1MΩ 5% >1MΩ 10%
0.25W ≤1MΩ 5% >1MΩ 10%
0.5W ≤1MΩ 5% >1MΩ 10%
1W ≤16MΩ 5% >16MΩ 10%
2W 5%
5.5W ≤47Ω 5% >47Ω 10%
10W 5%
SPRING RESISTOR
SAFETY RESISTOR
SAFETY CAPACITOR
POLYESTER 400V
FLAT-FOIL
CERAMIC 500V
CERAMIC 700V
PIN-UP 500V
SINGLE ELCO
3131 136 05780/632 Subject to modifications / Ändringar förbehålles
781596

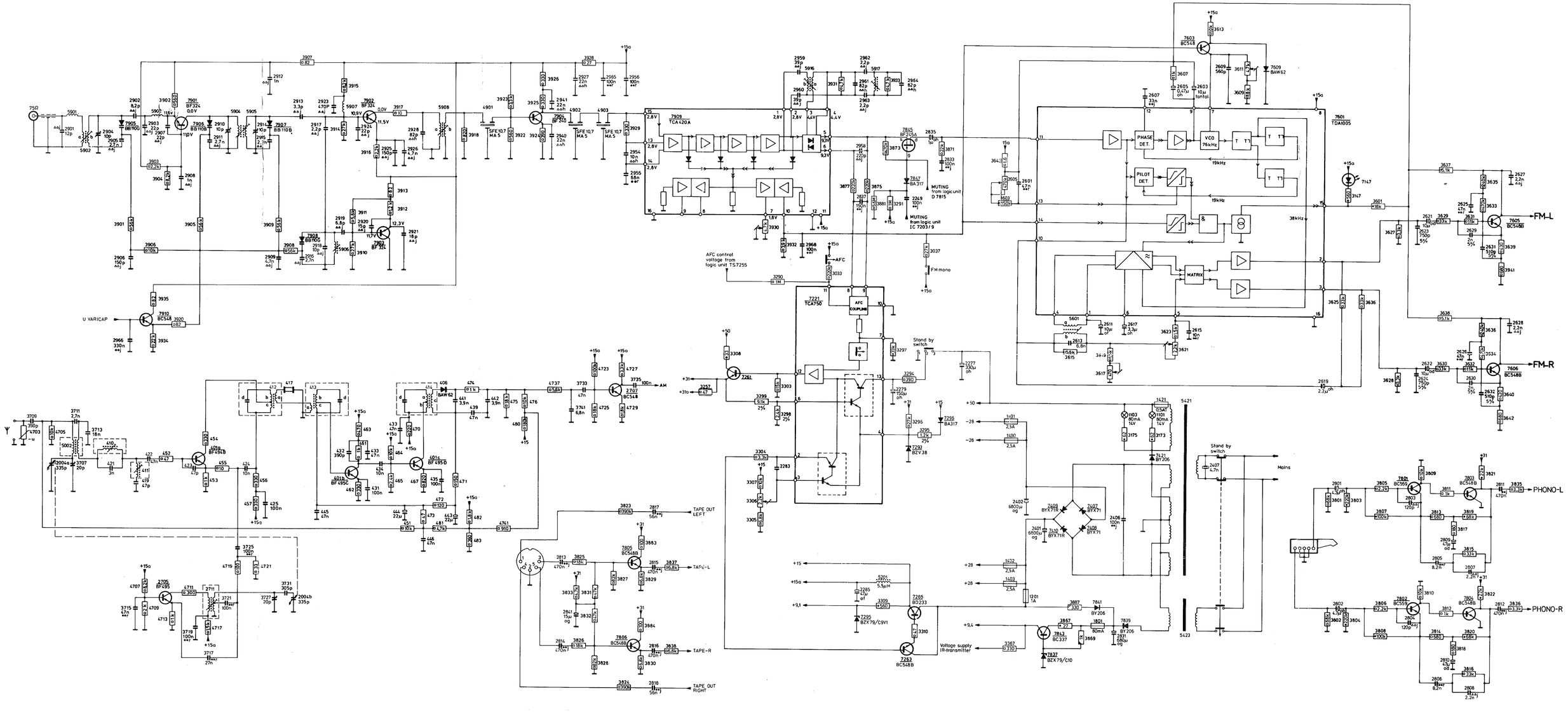
7901 BF324
7902 BF324
7903 BF324
7904 BF324
7905 BB110B
7906 BB110B
7907 BB110B
7908 BB106
7909 TCA420A
7910 BC548
7221 TCA750
7601 TDA1005
7603 BC548
7605 BC548B
7606 BC548B
7261 BC548B
7253 BC548B
7265 BD233
7801 BC559
7802 BC559
7803 BC548B
7804 BC548B
7805 BC548B
7806 BC548B
7837 BZX79/C10
7843 BC337
7847 BA317
7845 BF245A
7401 BYX71R
7402 BYX71R
7403 BYX71R
7404 BYX71R
7407 BYX71
7408 BYX71
7421 BY206
7839 BY206
7841 BY206
7843 BY206
7295 BZX79/C9V1
7293 BZX38
7296 BA317
7147
U VARICAP
AFC control voltage from logic unit TS7255
MUTING from logic unit D 7815
MUTING from logic unit IC 7203/9
AFC
FM mono
Stand by switch
Mains
Voltage supply IR-transmitter
TAPE OUT LEFT
TAPE-L
TAPE-R
TAPE OUT RIGHT
AM
FM-L
FM-R
PHONO-L
PHONO-R
PHASE DET.
PILOT DET.
VCO 76kHz
MATRIX
19kHz
38kHz
AFC COUPLING
5421
5423