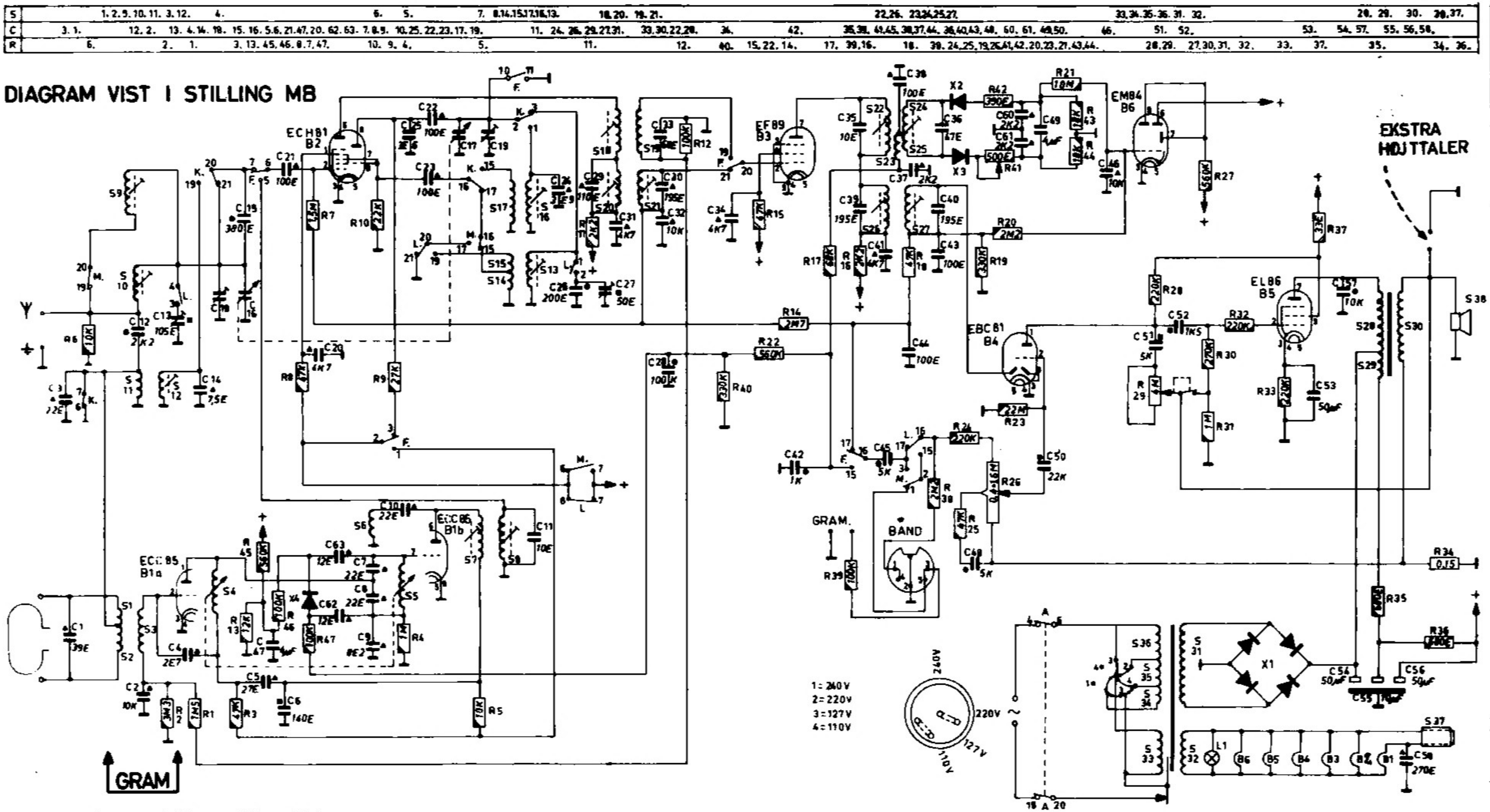

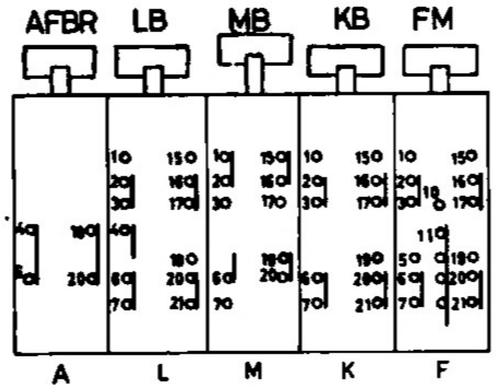

SPÆNDINGER

FM

RØR	ECC 85	ECH 81	EF 89	EBC 81	EL 86	EM 84
Ben 1	55V	52V		66V		
Ben 3					11V	
Ben 6	115V	140V				146V
Ben 7			135V		168V	27V
Ben 8			50V			
Ben 9					149V	27V

C54= 180V (71mA) C55= 165V C56= 149V

AM

RØR	ECC 85	ECH 81	EF 89	EBC 81	EL 86	EM 84
Ben 1		48V		68V		
Ben 3					11,6V	
Ben 6		154V				152V
Ben 7			142V		169V	28V
Ben 8		95V	59V			
Ben 9					156V	28V

C54= 181V (69mA) C55= 163V C56= 157V