2. SCHEMATIC AND PCB CONNECTION DIAGRAMS

2.1 OVERALL WIRING DIAGRAM, AF, CONTROL, SP SWITCH AND SHIELD ASSEMBLIES

AF ASS'Y (AWZ4942:A-502R/HEWZ, A-502R/HE AND A-502R-G/HEZ)
(AWZ4949:A-502R/HB)
(AWZ4946:A-402R/HEWZ AND A-402R/HE)

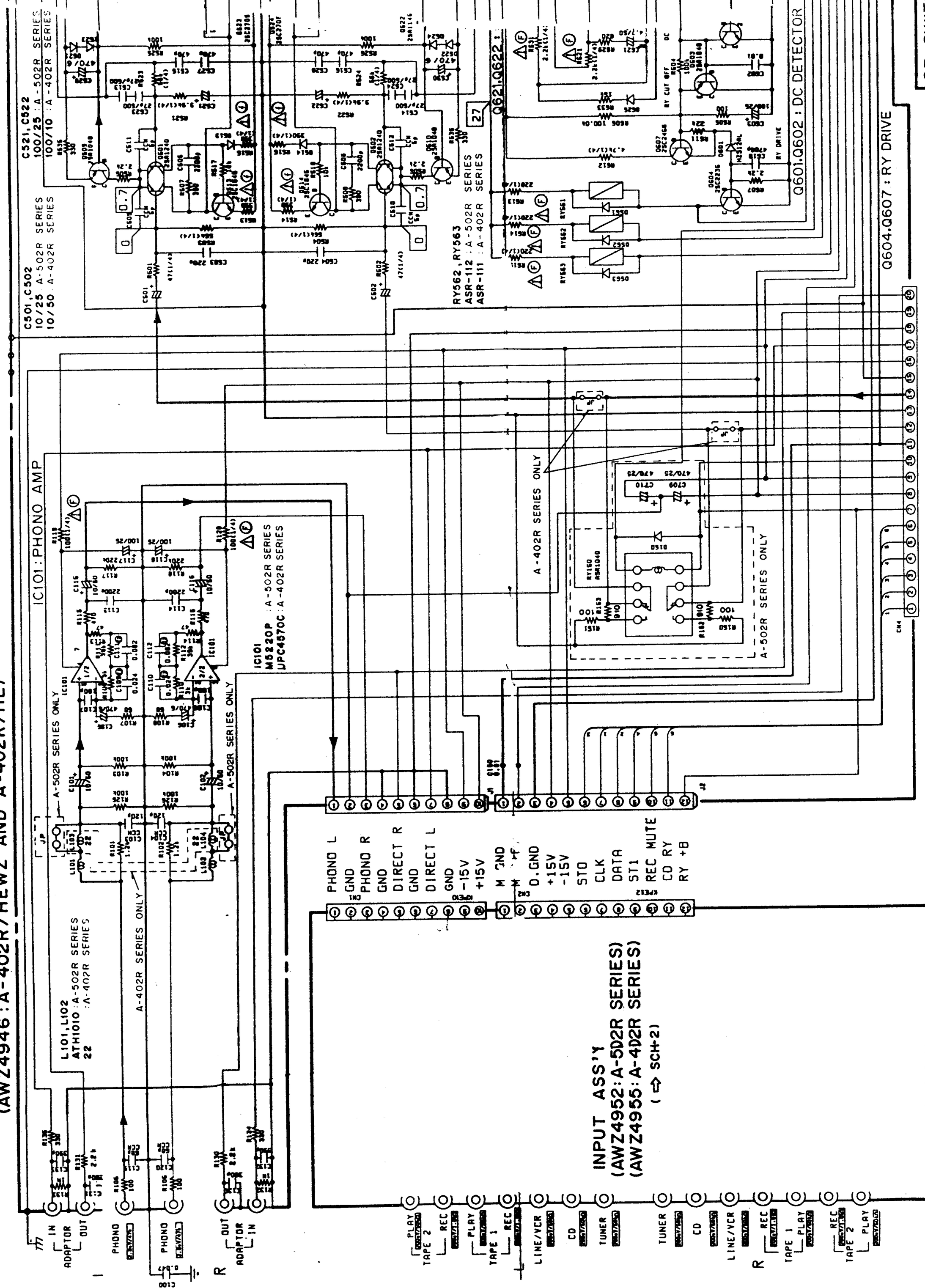

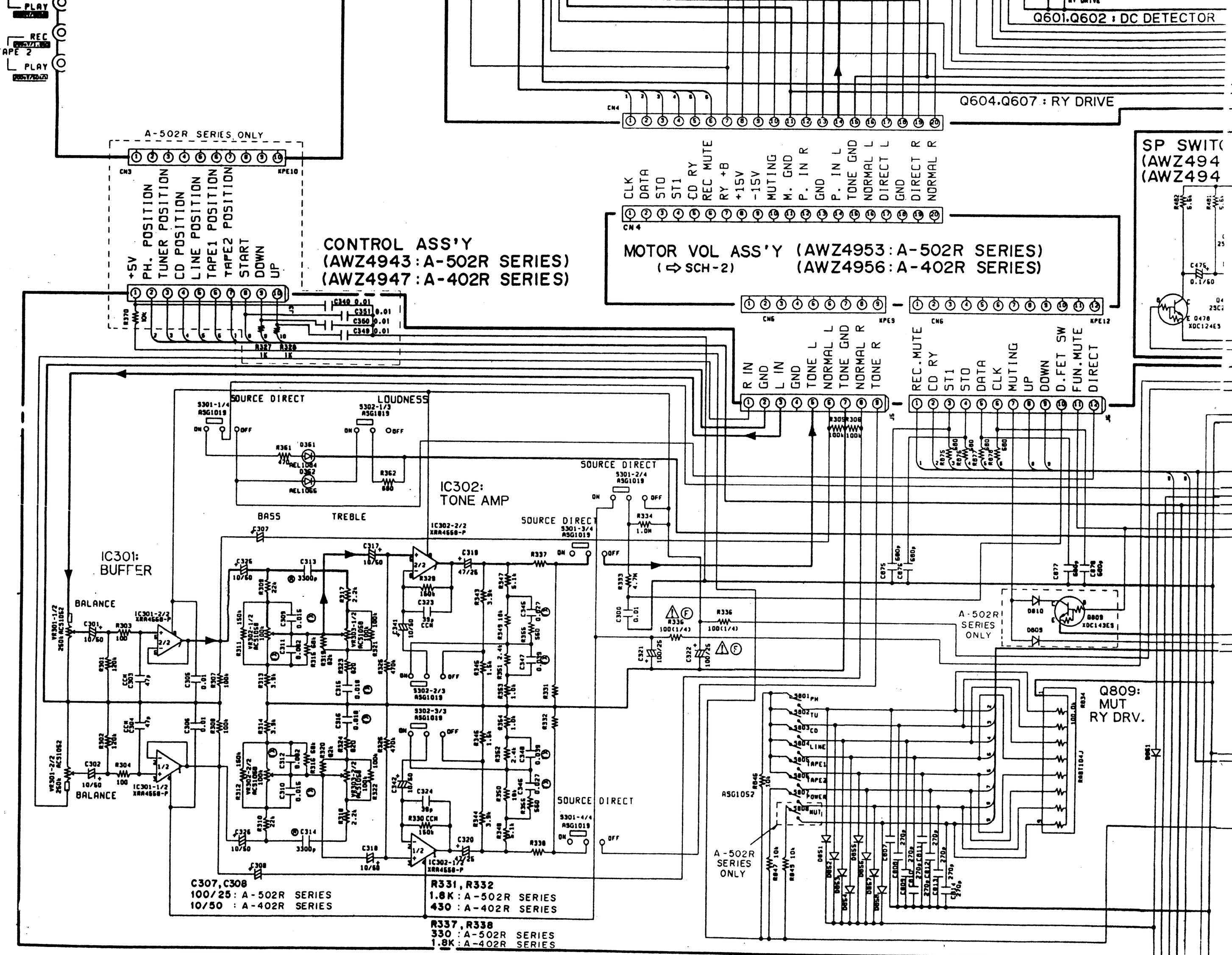

SCH-1

OVER ALL,
AF, CONTROL,
SP SWITCH,
SHIELD ASSY

RESISTORS

Indicated in Ω ,1/8W ±5% tolerance unless otherwise noted k:KΩ ,M:MΩ

CAPACITORS

unless otherwise noted p : pF
Indication without Voltage is 50V

DIODES

Other diodes (not noted) are 1S5252

A-502R, A-502R-G, A-402R

SCH -1

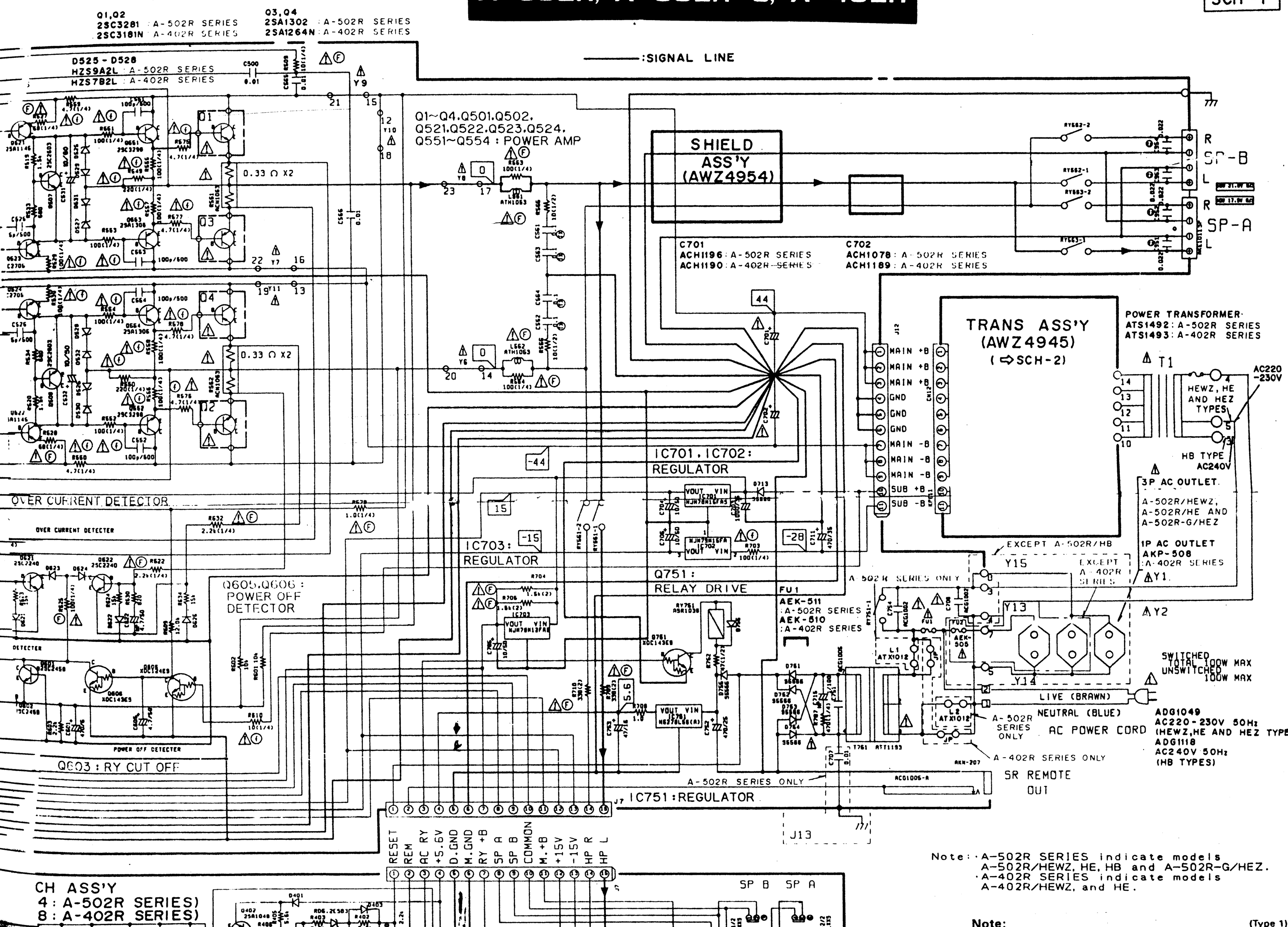

Note: ·A-502R SERIES indicate models A-502R/HEWZ, HE, HB and A-502R-G/HEZ.
·A-402R SERIES indicate models A-402R/HEWZ, and HE.

Note:

(Type 1)

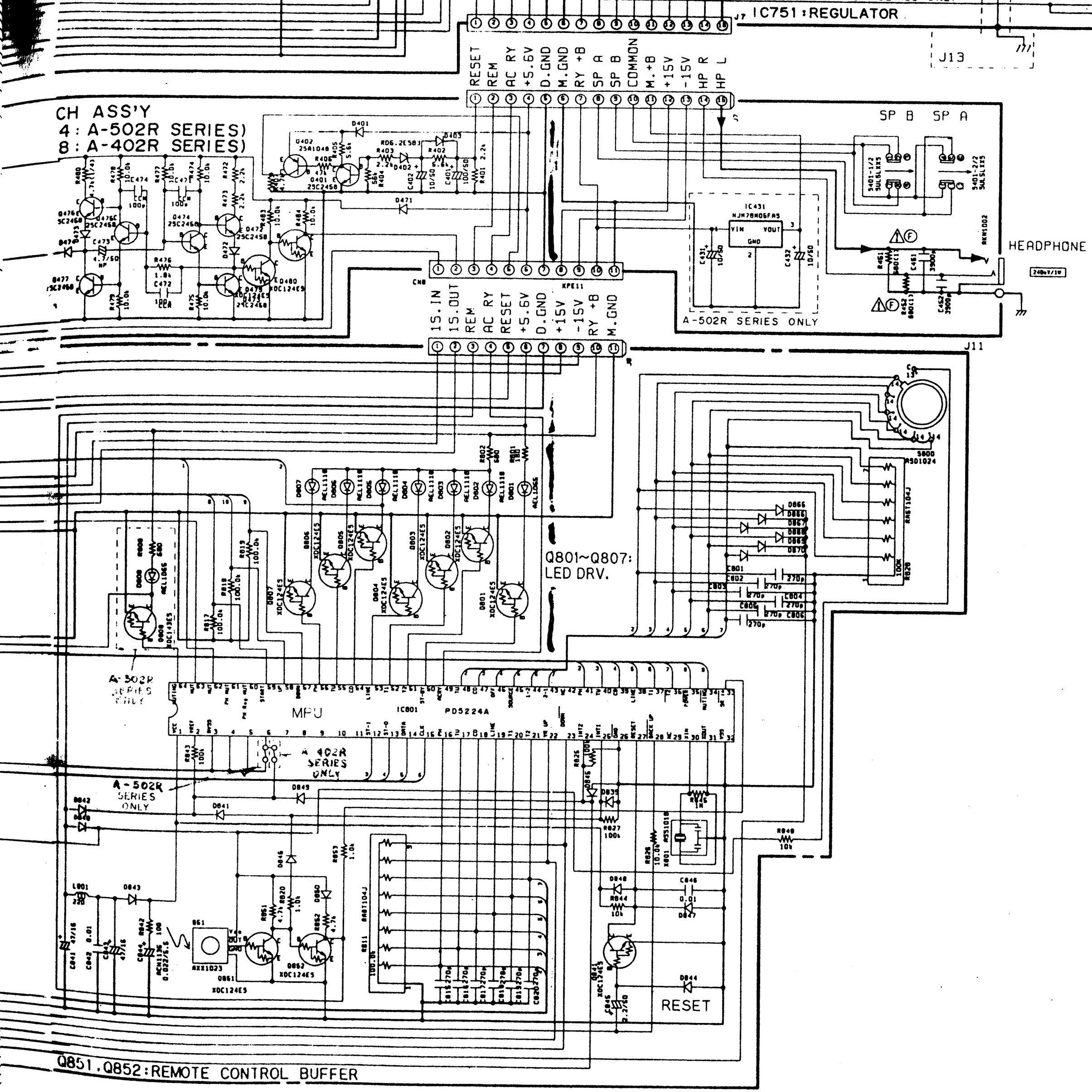

Note: · A-502R SERIES indicate models A-502R/HEWZ, HE, HB and A-502R-G/HEZ.
· A-402R SERIES indicate models A-402R/HEWZ, and HE.

Note:

(Type 1)

1. **When ordering service parts, be sure to refer to "PARTS LIST of EXPLODED VIEWS" or "PCB PARTS LIST".**
2. **Since these are basic circuits, some parts of them or the values of some components may be changed for improvement.**
3. **RESISTORS:**
   Unit: k:kΩ, M:MΩ, or Ω unless otherwise noted.
   Rated power: 1/4W, 1/6W, 1/8W, 1/10W unless otherwise noted.
   Tolerance. (F): ±1%, (G): ±2%, (K). ±10%, (M): ±20% or ±5% unless otherwise noted.
4. **CAPACITORS:**
   Unit: p:pF or μF unless otherwise noted.
   Ratings: capacitor (μF)/ voltage (V) unless otherwise noted.
   Rated voltage: 50V except for electrolytic capacitors.
5. **COILS:**
   Unit: m:mH or μH unless otherwise noted.
6. **VOLTAGE AND CURRENT:**
   [V] : Signal voltage at rated output.
   [ ] : DC voltage (V) at no input signal unless otherwise noted.
   Value in ( ) is DC voltage at rated power.
   ⇨ mA or ← mA : DC current at no input signal unless otherwise noted.
7. **OTHERS:**
   - ➡ : Signal route.
   - ⊘ : Adjusting point.
   - ▼ (Red) : Measurement point.
   - The ⚠ mark found on some component parts indicates the importance of the safety factor of the parts. Therefore, when replacing, be sure to use parts of identical designation.
8. **SWITCHES** (Underline indicates switch position):

CONTROL ASSY
- S301 : DIRECT ON-OFF
- S302 : LOUDNESS
- S800 : REC SELECTOR
- S801 : PHONO
- S802 : TUNER
- S803 : CD
- S804 : LINE
- S805 : TAPE 1/DAT
- S806 : TAPE 2
- S807 : POWER
- S808 : MUTE (A-502R ONLY)

SP SWITCH ASSY
- S401-1 : A(SPEAKERS)ON-OFF
- S401-2 : B(SPEAKERS)ON-OFF

INPUT ASSY
- S271 : INPUT SELECT (A-502R ONLY)

9. For SCH – □ on the schematic diagram
   SCH – □ indicates the drawing number of the schematic diagram.
   (SCH stands for schematic diagram.)

2.2 INPUT, MOTOR VOL AND TRANS ASSEMBLIES

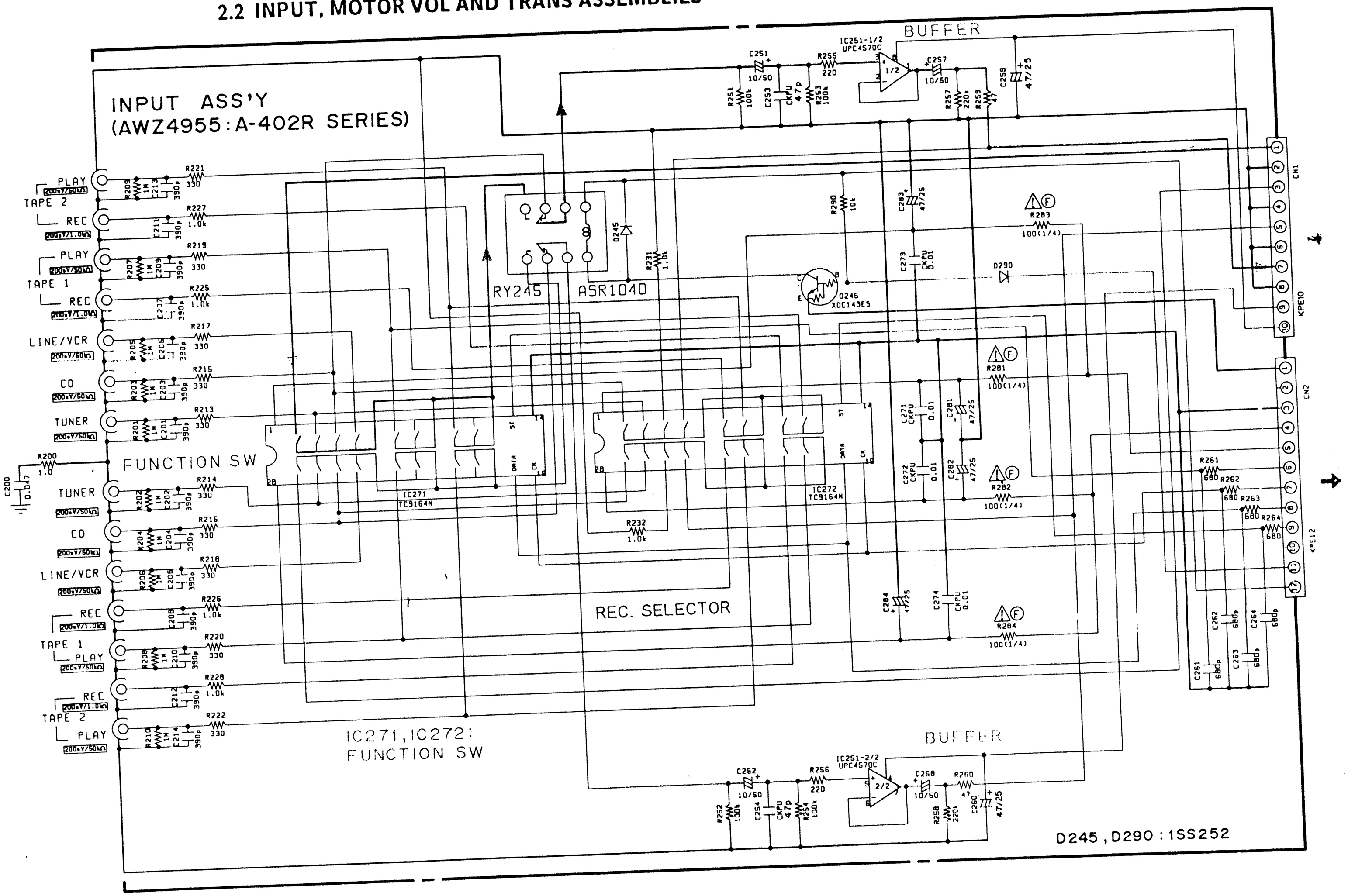

D245 , D290 : 1SS252

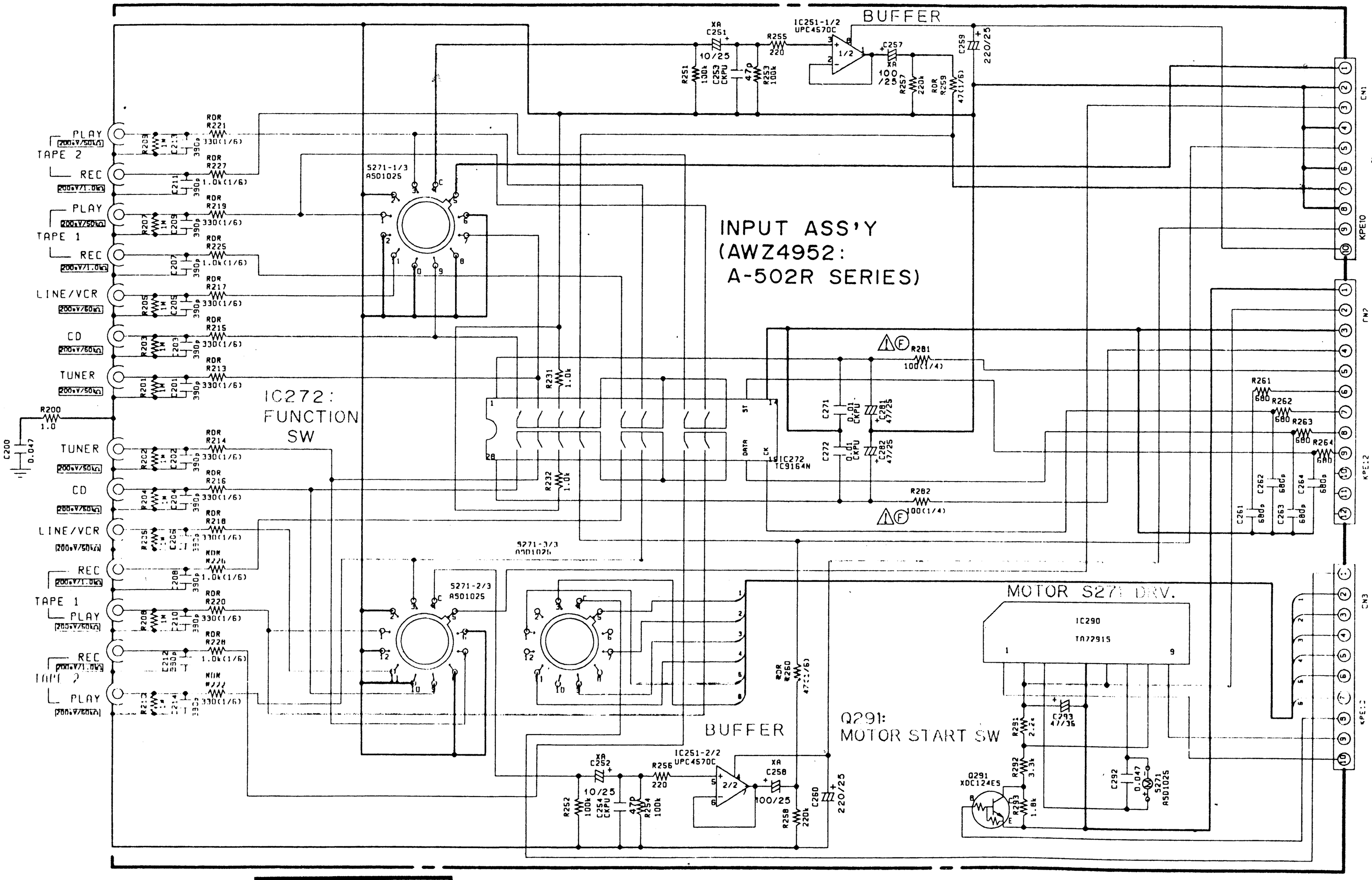

SCH-2

INPUT,
MOTOR VOL,
TRANS ASSY

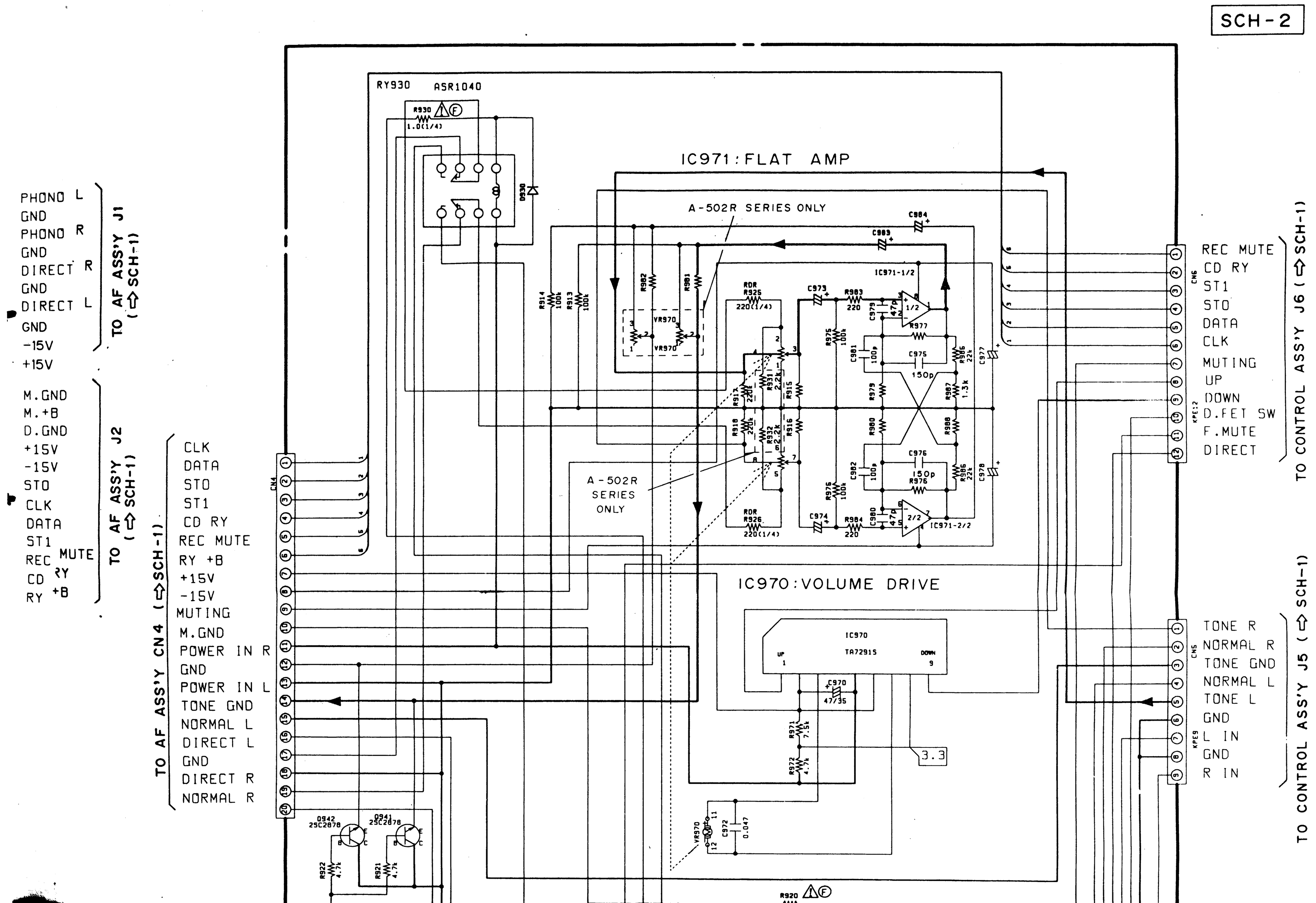
RY930 ASR1040
R930 1.0(1/4)
D930
IC971:FLAT AMP
A-502R SERIES ONLY
A-502R SERIES ONLY
IC971-1/2
IC971-2/2
IC970:VOLUME DRIVE
IC970
TA72915
UP 1
DOWN 9
3.3
PHONO L
GND
PHONO R
GND
DIRECT R
GND
DIRECT L
GND
-15V
+15V
TO AF ASS'Y J1 (⇨SCH-1)
M.GND
M.+B
D.GND
+15V
-15V
STO
CLK
DATA
ST1
REC MUTE
CD RY
RY +B
TO AF ASS'Y J2 (⇨SCH-1)
CLK
DATA
STO
ST1
CD RY
REC MUTE
RY +B
+15V
-15V
MUTING
M.GND
POWER IN R
GND
POWER IN L
TONE GND
NORMAL L
DIRECT L
GND
DIRECT R
NORMAL R
TO AF ASS'Y CN4 (⇨SCH-1)
REC MUTE
CD RY
ST1
STO
DATA
CLK
MUTING
UP
DOWN
D.FET SW
F.MUTE
DIRECT
TO CONTROL ASS'Y J6 (⇨SCH-1)
TONE R
NORMAL R
TONE GND
NORMAL L
TONE L
GND
L IN
GND
R IN
TO CONTROL ASS'Y J5 (⇨SCH-1)

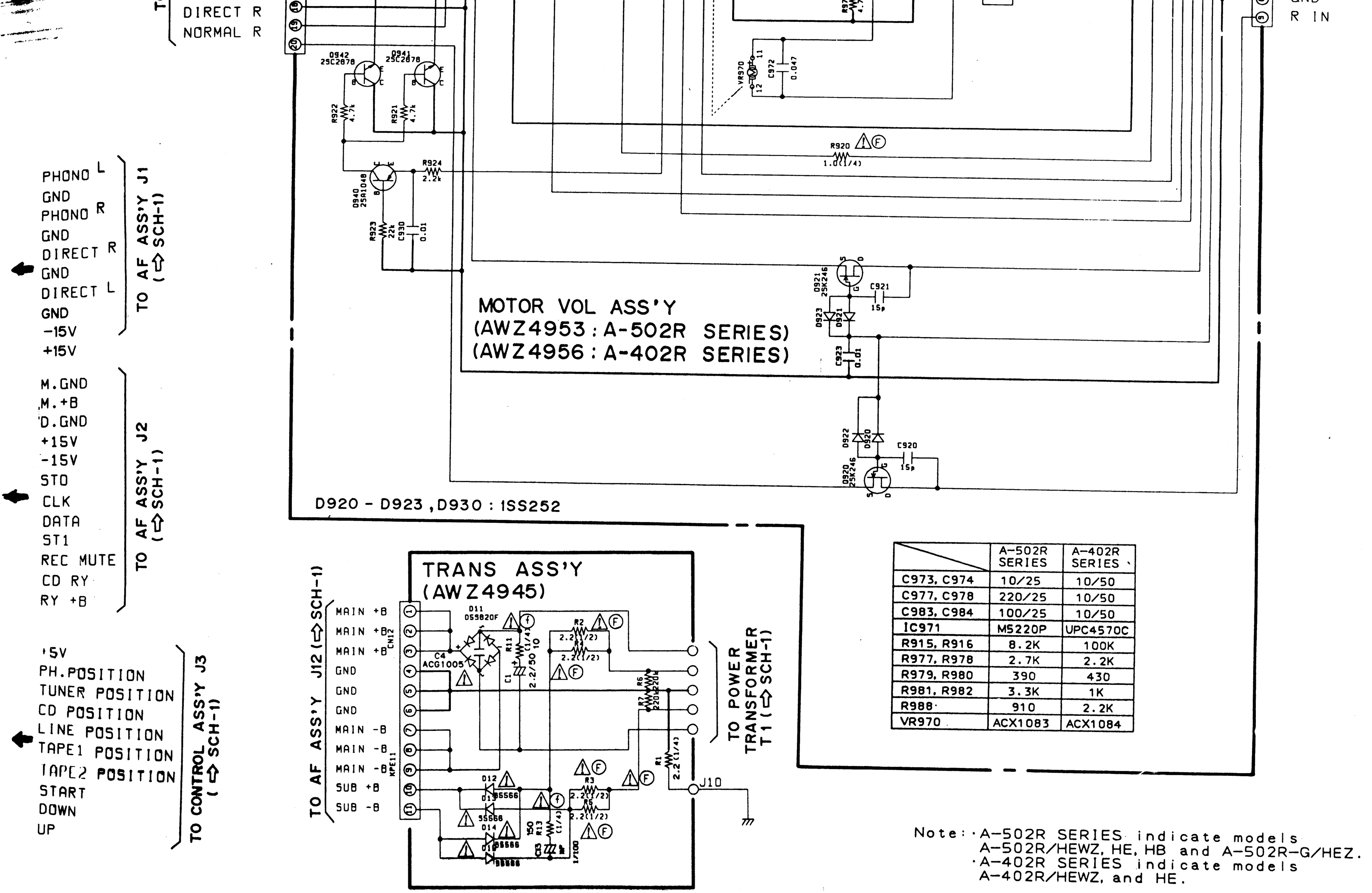

	A-502R SERIES	A-402R SERIES
C973, C974	10/25	10/50
C977, C978	220/25	10/50
C983, C984	100/25	10/50
IC971	M5220P	UPC4570C
R915, R916	8.2K	100K
R977, R978	2.7K	2.2K
R979, R980	390	430
R981, R982	3.3K	1K
R988	910	2.2K
VR970	ACX1083	ACX1084

Note: · A-502R SERIES indicate models A-502R/HEWZ, HE, HB and A-502R-G/HEZ.
· A-402R SERIES indicate models A-402R/HEWZ, and HE.