Flat amp ass'y A AWG-026

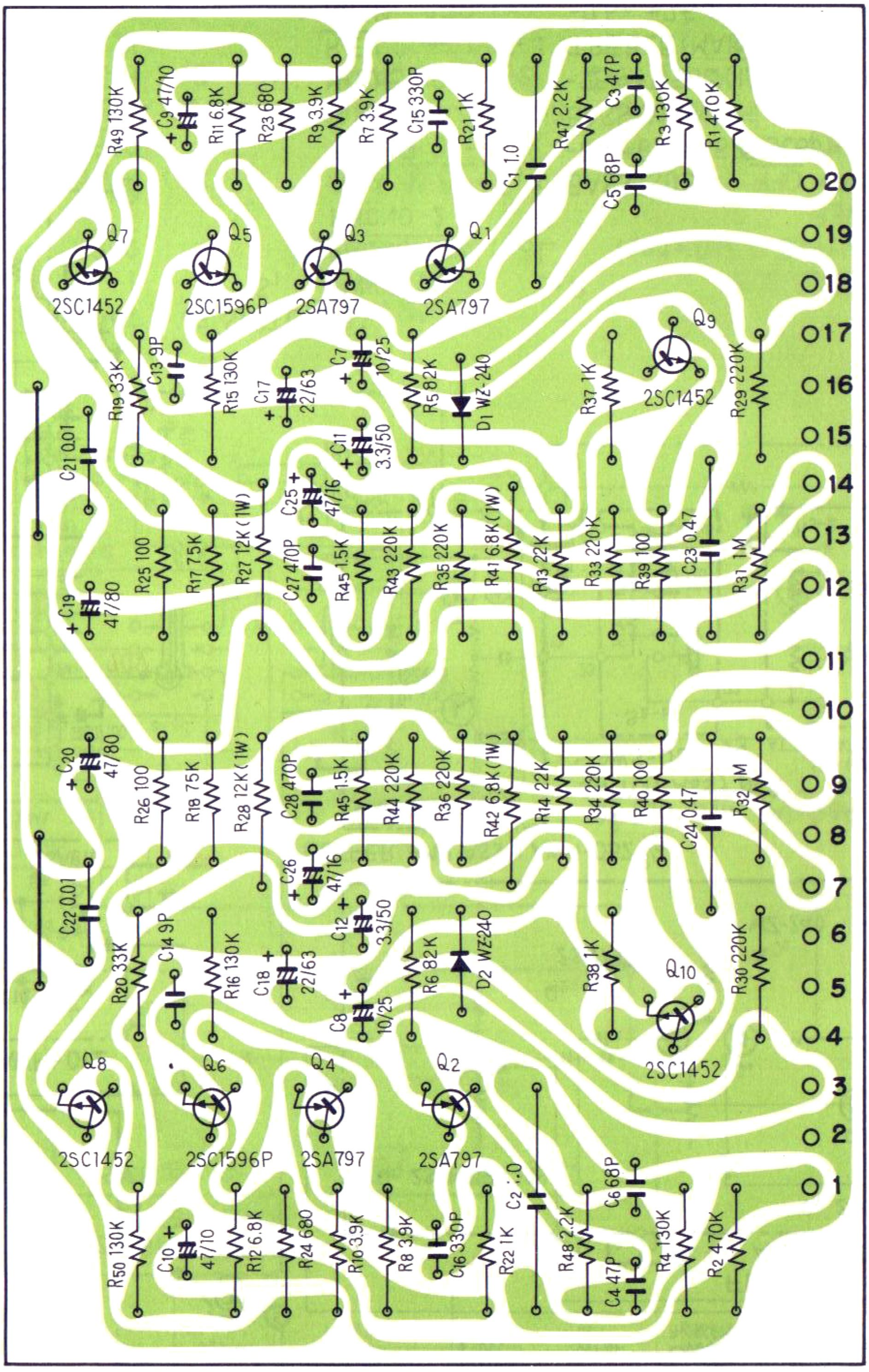

Flat amp ass'y B AWG-028

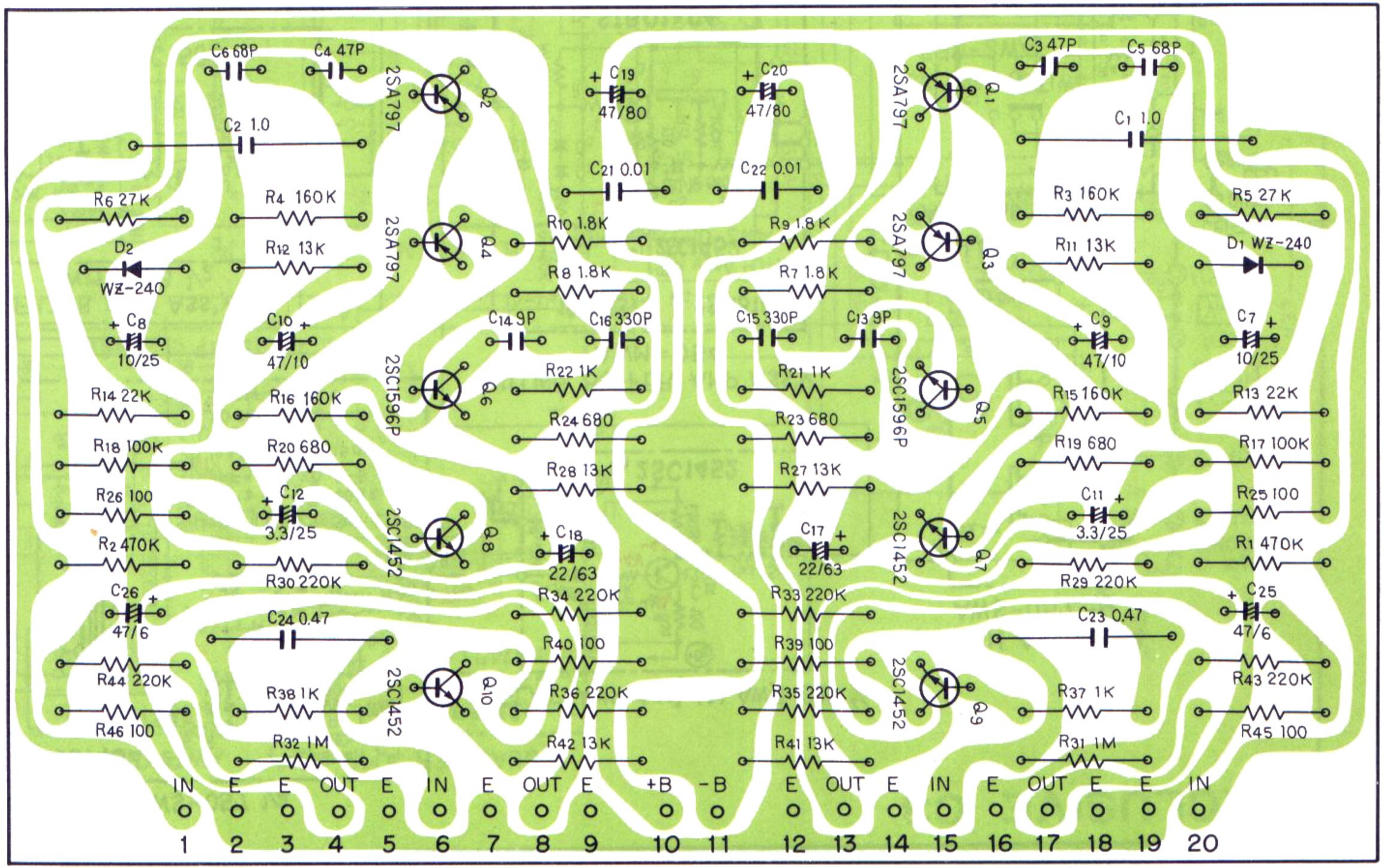

Buffer amp ass'y AWM-052

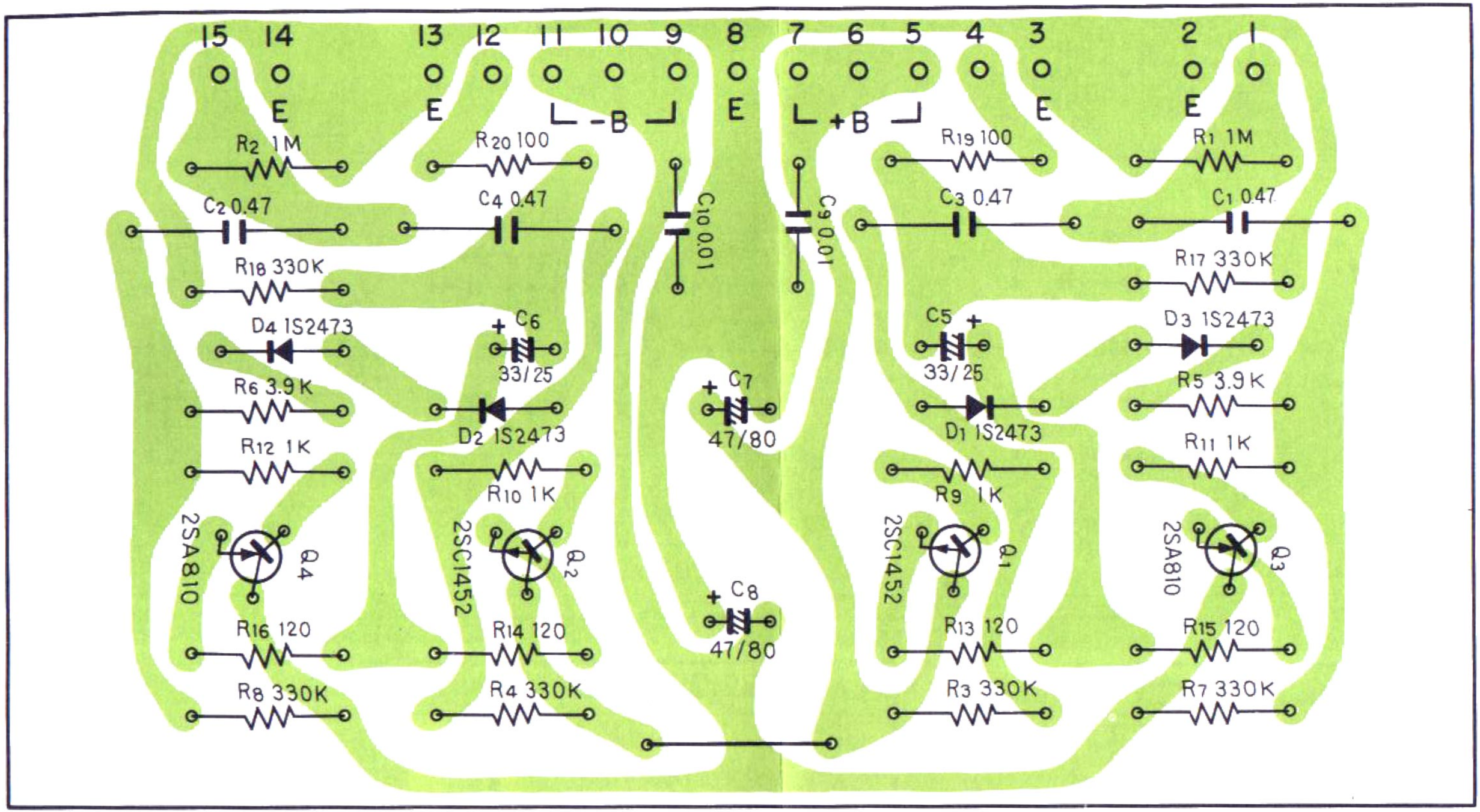

Filter amp ass'y AWM-053

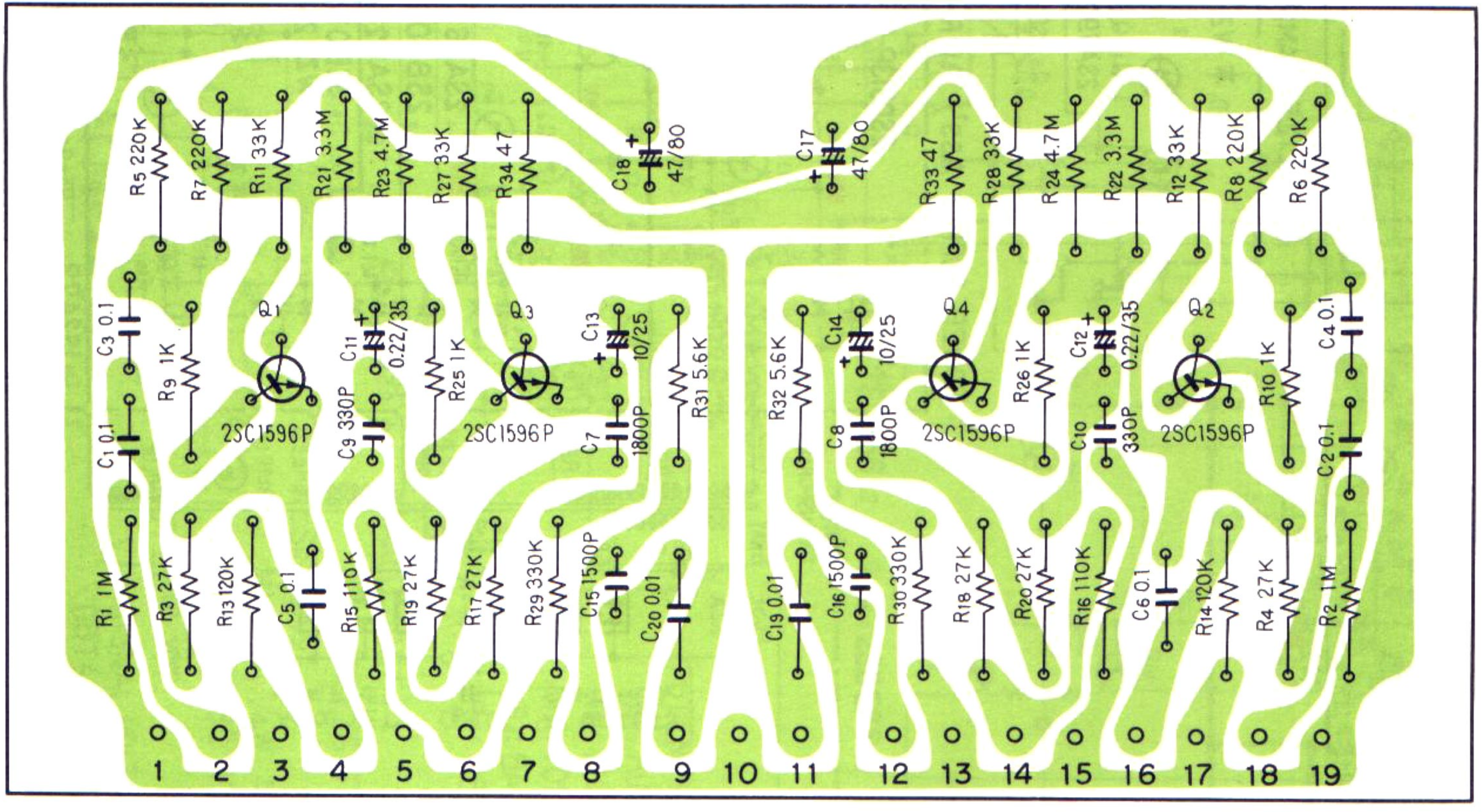

Muting buffer amp ass'y AWM-054

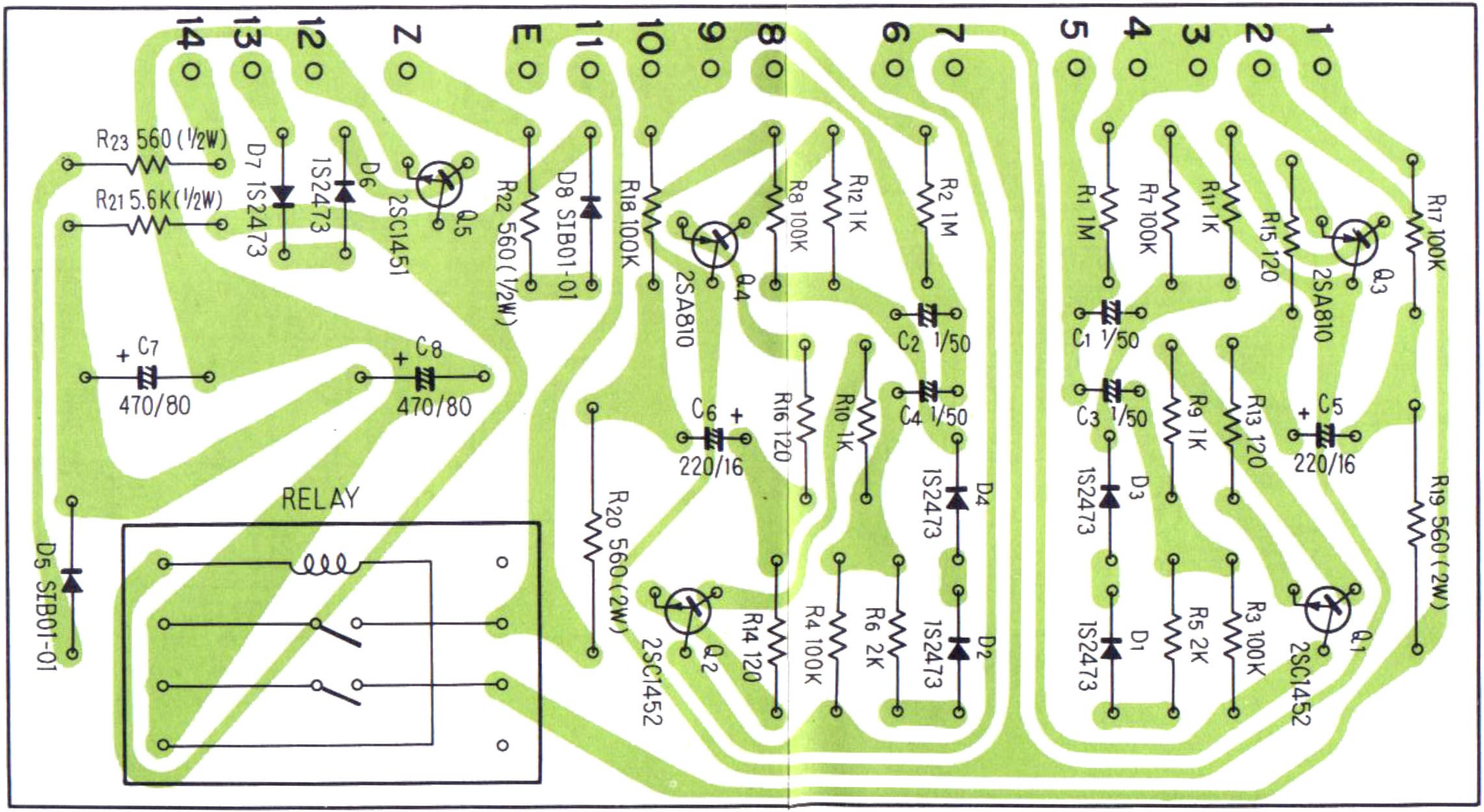

Headphone amp ass'y AWM-055

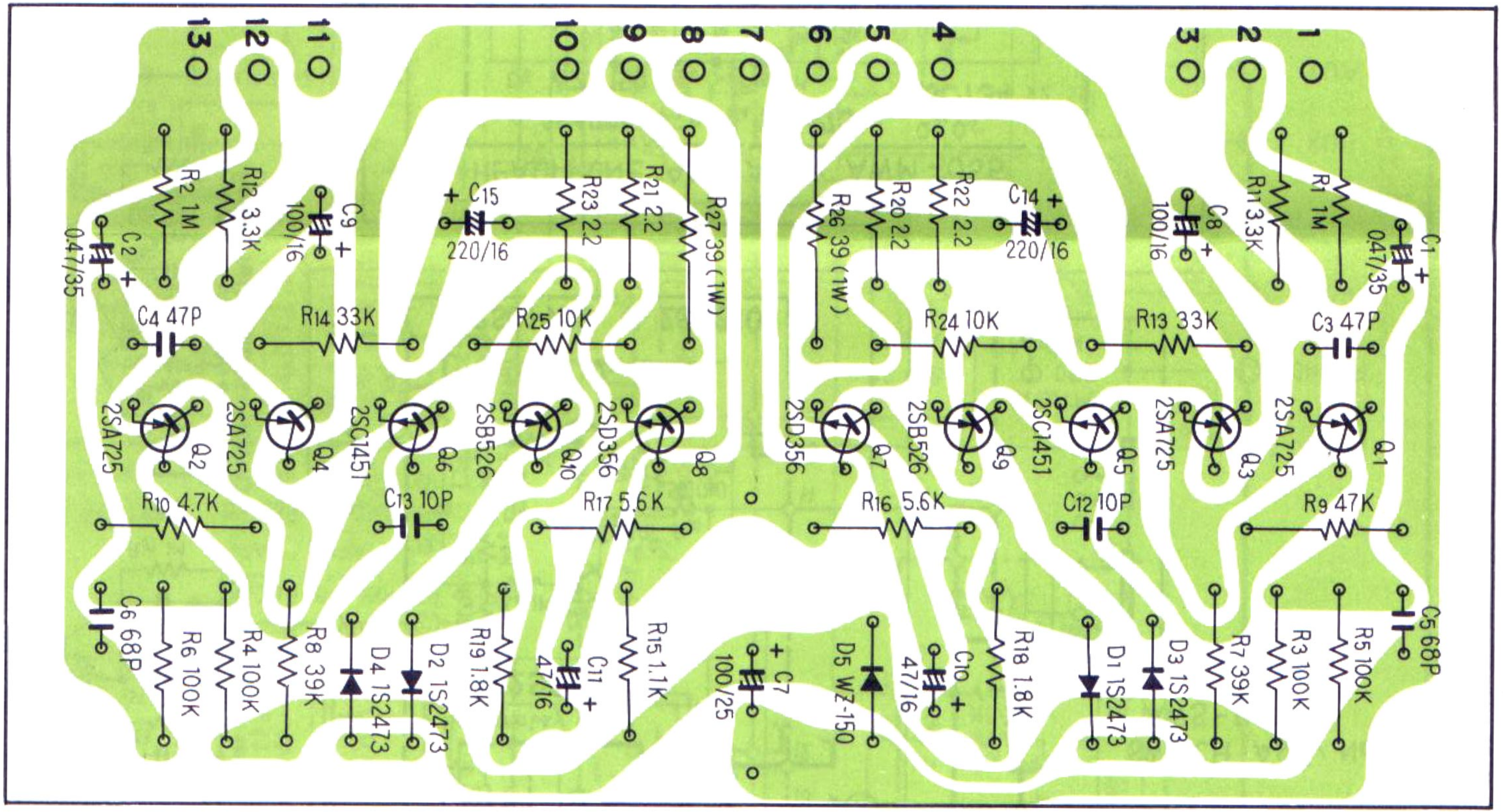

Power supply ass'y AWR-048

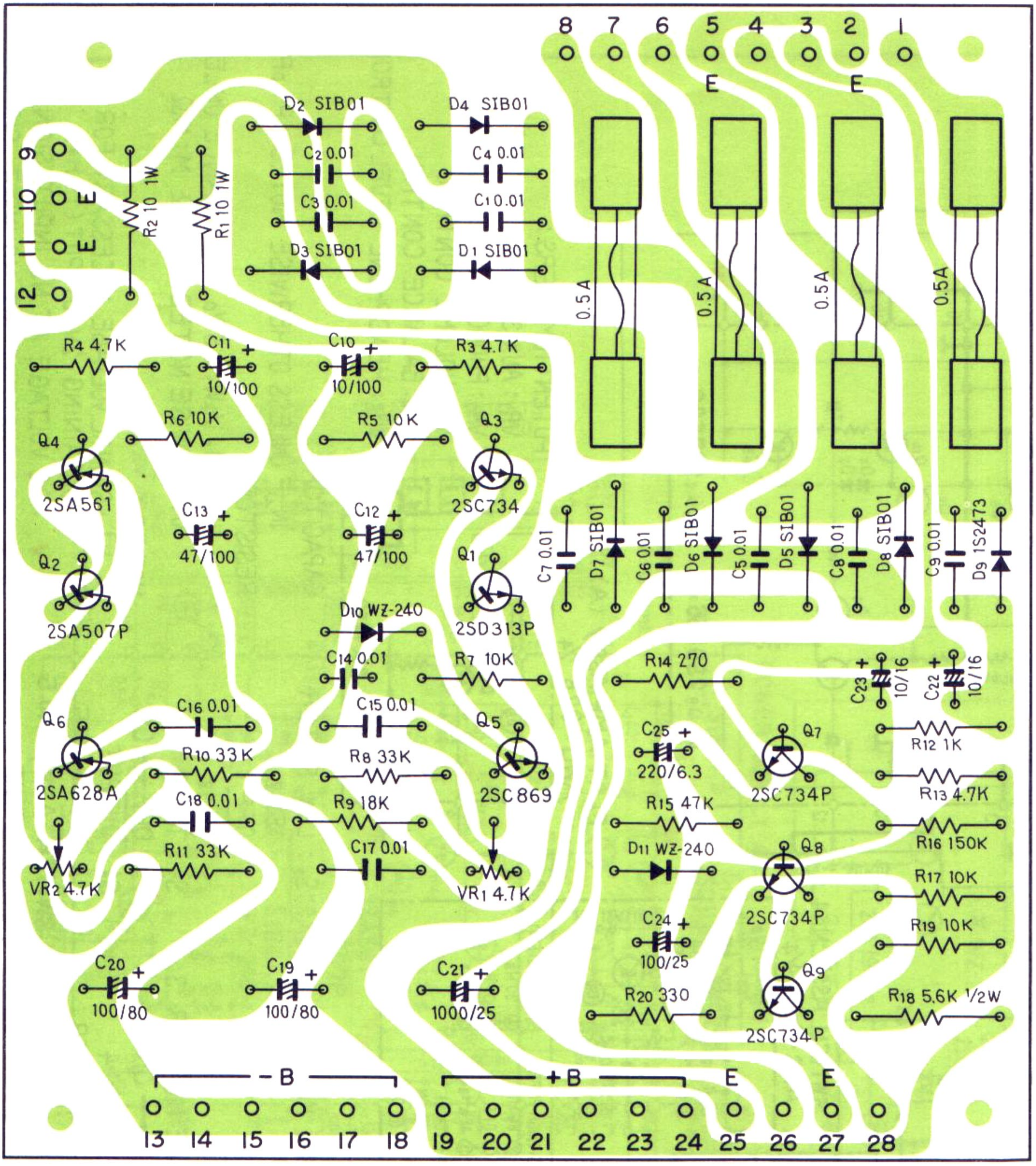

Switch ass'y No.4 AWS-057

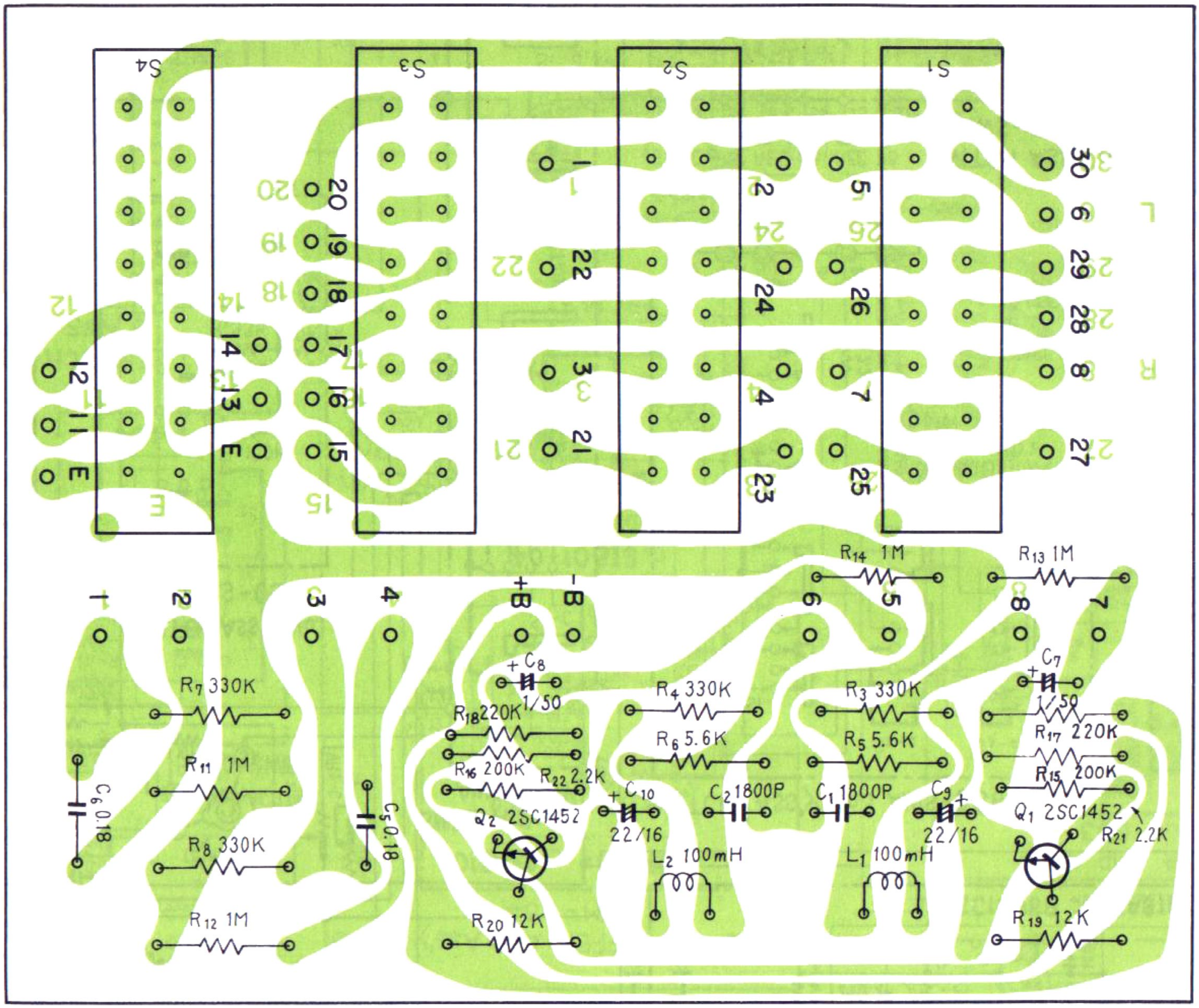

Equalizer amp ass'y AWF-012

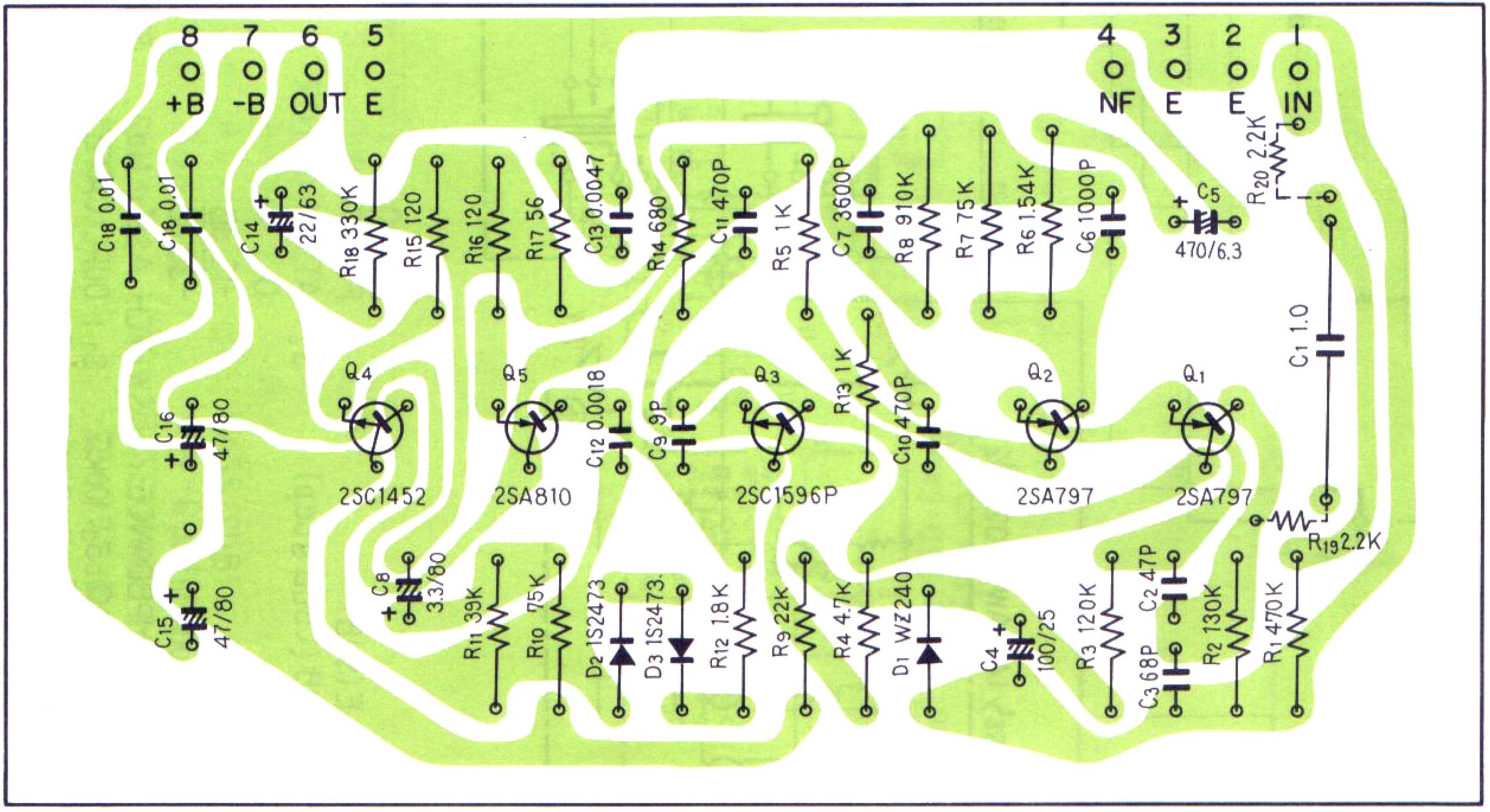

EXCLUSIVE C3

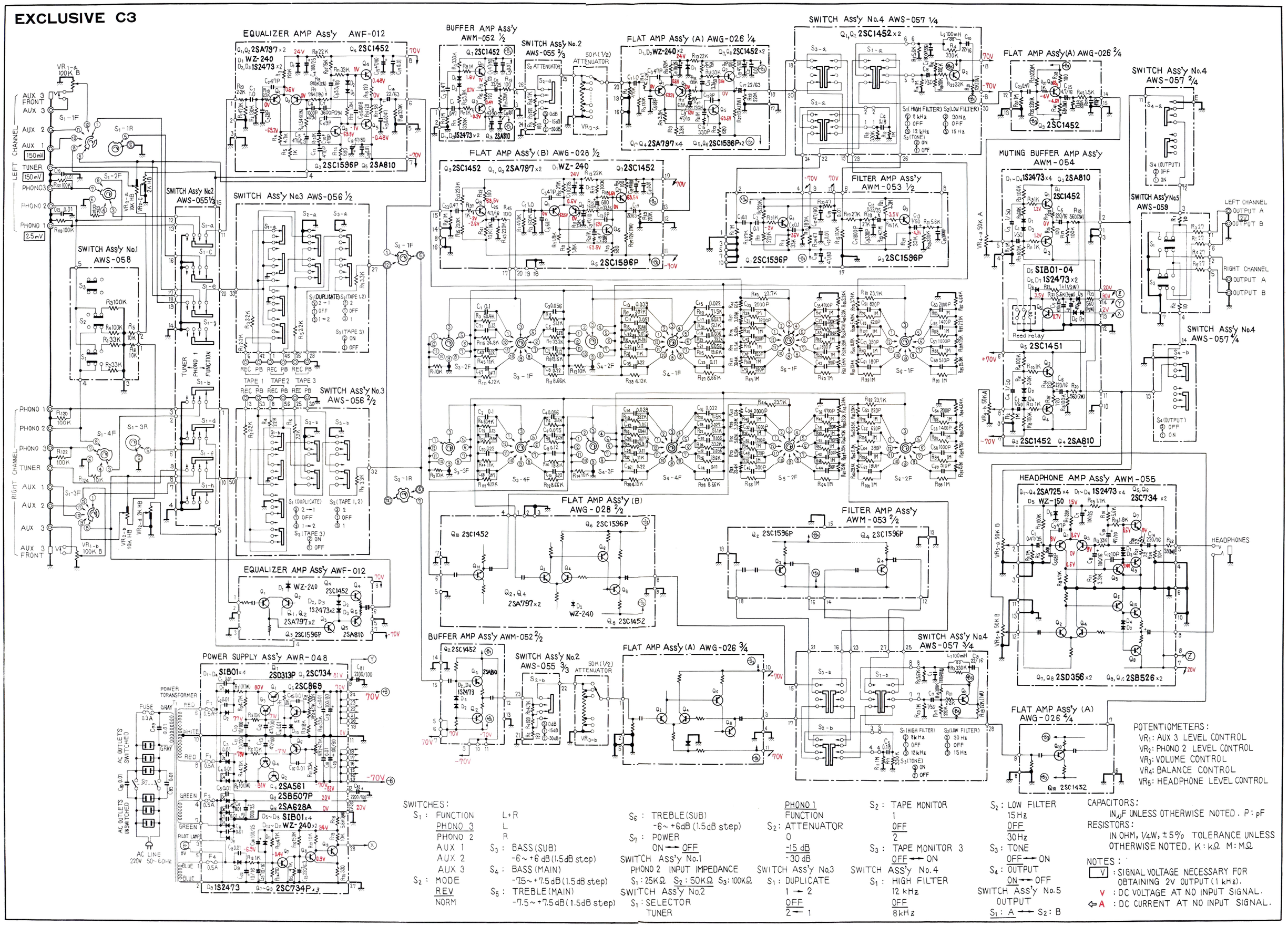

POTENTIOMETERS:
- VR_1: AUX 3 LEVEL CONTROL
- VR_2: PHONO 2 LEVEL CONTROL
- VR_3: VOLUME CONTROL
- VR_4: BALANCE CONTROL
- VR_5: HEADPHONE LEVEL CONTROL

SWITCHES:

S_1: FUNCTION — L+R; L; R; PHONO 3; PHONO 2; AUX 1; AUX 2; AUX 3

S_2: MODE — REV; NORM

S_3: BASS (SUB) -6~+6 dB (1.5dB step)

S_4: BASS (MAIN) -7.5~+7.5 dB (1.5 dB step)

S_5: TREBLE (MAIN) -7.5~+7.5 dB (1.5 dB step)

S_6: TREBLE (SUB) -6~+6dB (1.5dB step)

S_7: POWER — ON → OFF

SWITCH Ass'y No.1 — PHONO 2 INPUT IMPEDANCE: S_1: 25KΩ, S_2: 50KΩ, S_3: 100KΩ

SWITCH Ass'y No.2 — S_1: SELECTOR — TUNER; PHONO 1

PHONO 1 — FUNCTION

S_2: ATTENUATOR — 0; -15 dB; -30 dB

SWITCH Ass'y No.3 — S_1: DUPLICATE — 1 → 2; OFF; 2 → 1

S_2: TAPE MONITOR — 1; OFF; 2

S_3: TAPE MONITOR 3 — OFF → ON

SWITCH Ass'y No.4 — S_1: HIGH FILTER — 12 kHz; OFF; 8 kHz

S_2: LOW FILTER — 15 Hz; OFF; 30 Hz

S_3: TONE — OFF → ON

S_4: OUTPUT — ON → OFF

SWITCH Ass'y No.5 — OUTPUT — S_1: A → S_2: B

CAPACITORS: IN μF UNLESS OTHERWISE NOTED. P: pF

RESISTORS: IN OHM, 1/4W, ±5% TOLERANCE UNLESS OTHERWISE NOTED. K: kΩ M: MΩ

NOTES:
- V: SIGNAL VOLTAGE NECESSARY FOR OBTAINING 2V OUTPUT (1 kHz).
- V: DC VOLTAGE AT NO INPUT SIGNAL.
- ⇦A: DC CURRENT AT NO INPUT SIGNAL.