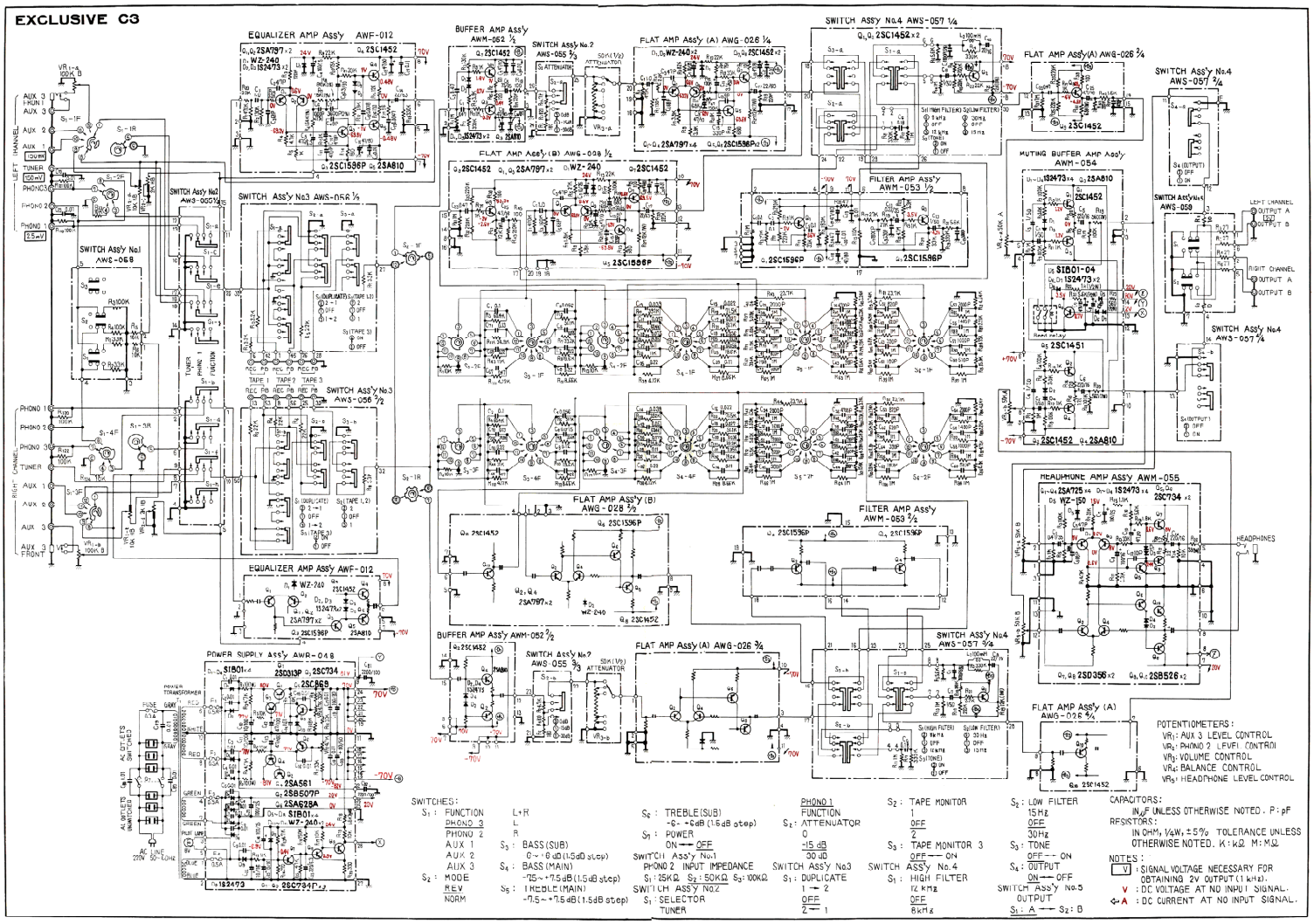EXCLUSIVE C3