PIONEER

Service Manual

REPAIR & ADJUSTMENTS

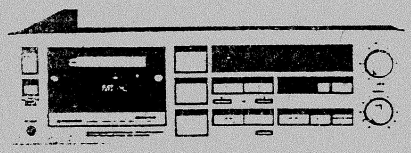

ORDER NO.
ARP-450-0

STEREO CASSETTE TAPE DECK

CT-A7

MODEL CT-A7 COMES IN SEVEN VERSIONS DISTINGUISHED AS FOLLOWS:

Type	Voltage	Remarks
KU	AC120V only	U.S.A. model
KC	AC120V only	Canada model
HEM	AC220V (240V)	European continent model
HB	AC240V (220V)	United Kingdom model
HP	AC240V (220V)	Australia model
D	AC120V, 220V, 240V (switchable)	General export model
D/G	AC120V, 220V, 240V (switchable)	U.S. Military model

- This service manual is applicable to the KU type. For servicing of the other types, please refer to pp. 59~62.
- For the circuit and mechanism descriptions, please refer to the CT-A9 service manual (ARP-462-0).
- Ce manuel d'instruction se refère au mode de réglage, en français.
- Este manual de servicio trata del método de ajuste escrito en español.

CONTENTS

PIONEER ELECTRONIC CORPORATION 4-1, Meguro 1-Chome, Meguro-ku, Tokyo 153, Japan
PIONEER ELECTRONICS (USA) INC. P.O. Box 1760, Long Beach, California 90801 U.S.A.
PIONEER ELECTRONIC (EUROPE) N.V. Keetberglaan 1, 2740 Beveren, Belgium
PIONEER ELECTRONICS AUSTRALIA PTY. LTD. 178-184 Boundary Road, Braeside, Victoria 3195, Australia

1. SAFETY INFORMATION

1. SAFETY PRECAUTIONS

The following check should be performed for the continued protection of the customer and service technician.

LEAKAGE CURRENT CHECK

Measure leakage current to a known earth ground (water pipe, conduit, etc.) by connecting a leakage current tester such as Simpson Model 229-2 or equivalent between the earth ground and all exposed metal parts of the appliance (input/output terminals, screwheads, metal overlays, control shaft, etc.). Plug the AC line cord of the appliance directly into a 120V AC 60Hz outlet and turn the AC power switch on. Any current measured must not exceed 0.5mA.

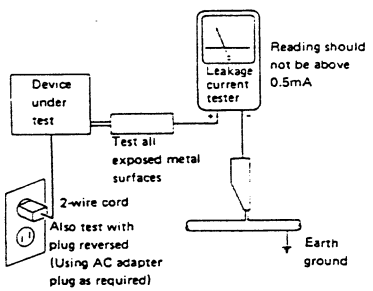

AC Leakage Test

ANY MEASUREMENTS NOT WITHIN THE LIMITS OUTLINED ABOVE ARE INDICATIVE OF A POTENTIAL SHOCK HAZARD AND MUST BE CORRECTED BEFORE RETURNING THE APPLIANCE TO THE CUSTOMER.

2. PRODUCT SAFETY NOTICE

Many electrical and mechanical parts in the appliance have special safety related characteristics. These are often not evident from visual inspection nor the protection afforded by them necessarily can be obtained by using replacement components rated for voltage, wattage, etc. Replacement parts which have these special safety characteristics are identified in this Service Manual.

Electrical components having such features are identified by marking with a ⚠ on the schematics and on the parts list in this Service Manual.
The use of a substitute replacement component which dose not have the same safety characteristics as the PIONEER recommended replacement one, shown in the parts list in this Service Manual, may create shock, fire, or other hazards.

Product Safety is continuously under review and new instructions are issued from time to time. For the latest information, always consult the current PIONEER Service Manual. A subscription to, or additional copies of, PIONEER Service Manual may be obtained at a nominal charge from PIONEER.

2. SPECIFICATIONS

System	4 track, 2-channel stereo
Heads	"Ribbon Sendust" recording/playback combination head x 1, Erasing head x 1
Motor	DC servo capstan motor x 1 DC reel motor x 1
Wow/Flutter	No more than 0.028% (WRMS) No more than ± 0.085% (DIN)
Fast Winding Time	Approx. 80 seconds (C-60 tape)
Frequency Response	
−20 dB recording:	
Normal tape	20 to 20,000 Hz (30 to 19,000 Hz ± 3 dB)
Chrome tape	20 to 20,000 Hz (25 to 19,000 Hz ± 3 dB)
Metal tape	20 to 20,500 Hz (25 to 20,000 Hz ± 3 dB)
0 dB recording:	
Chrome tape	20 to 11,000 Hz
Metal tape	20 to 16,000 Hz
Signal-to-Noise Ratio	
Dolby NR OFF	More than 57 dB
Noise Reduction Effect	
Dolby type B NR ON	More than 10 dB (at 5 kHz)
Dolby type C NR ON	More than 19 dB (at 5 kHz)
Harmonic Distortion	No more than 0.8% (0 dB)
Input (Sensitivity)	
LINE (INPUT)	63 mV (Input impedance 120 kΩ)
Output (Reference level)	
LINE (OUTPUT)	0,63 V (Output impedance 3 kΩ)
Headphone	0,45 mW (Load impedance 8 Ω)

MISCELLANEOUS

Power Requirements	
KU, KC models	AC 120 V, 60 Hz
HEM model	AC 220 V, 50/60 Hz
HB, HP models	AC 240 V, 50/60 Hz
D, D/G models	AC 120/220/240V, 50/60 Hz (switchable)
Power Consumption	
KU, KC models	38 watts
HEM, HB, HP models	35 watts
D, D/G models	28 watts
Dimensions	420 (W) x 130 (H) x 374 (D) mm 16-9/16 (W) x 5-1/8 (H) x 14-12/16 (D) in
Weight (without packaging)	7.9 kg (17 lb 7 oz)

FURNISHED PARTS

Operating instructions	1
Connection cord with pin plug	2

SUBFUNCTIONS

- Four-column digital counter
- Dolby NR system (type B and C)
- Closed loop dual capstan
- One touch MS, one touch tape return
- Auto monitor
- Auto tape selector function
- Auto rec mute
- Recording level warning zone switch
- Auto loading/power eject
- Timer standby function

NOTES:

1. Reference Tapes:
   Normal and LH: DIN 45513/BLATT6 or equiv.
   CrO_2 DIN 45513/BLATT7 (CrO_2) or equiv.
2. Reference Recording Level: Meter 0 dB indicating level (160 nwb/m magnetic level = Philips cassette reference level)
3. Reference Signal: 315 Hz
4. Wow and Flutter: • JIS (3 kHz, with acoustic compensation (weighted) rms value); DIN 3,150Hz with acoustic compensation (weighted) PEAK value DIN 45507
5. Frequency Response: • Measured at − 20 dB level, DOLBY NR OFF, level deviation is ± 6 dB without indication.
6. Signal-to-Noise Ratio: • Measured at 3rd harmonic distortion 3% level, weighted (DIN 45513/BLATT7)
7. Sensitivity: Input level (mV) required for reference recording level with input (REC) level control set to maximum
8. Maximum Allowable Input: While decreasing settings of input (REC) level controls and increasing level at input jacks, this is the maximum input level (mV) at the point where recording amplifier OUTPUT waveform becomes clipped.
9. Reference Output Level: Playback output level when meter indicates 0 dB.
10. This model does not employ a recording/playback connector (DIN-type).

NOTE:
Specifications and the design are subject to possible modifications without notice due to improvements.

3. FRONT PANEL FACILITIES

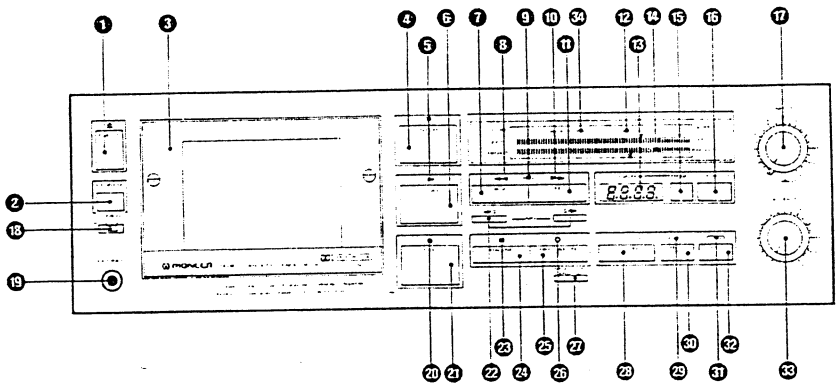

❶ EJECT BUTTON

Press this button to open the cassette door. Whenever inserting or removing a cassette tape, be sure that the power is turned ON.

❷ POWER SWITCH

When this switch is depressed power is turned ON, and when it is depressed again, power is turned OFF. After the power is turned ON, the unit will not operate for a duration of 4 seconds which is the neccesary time for the unit to become stable.

❸ CASSETTE DOOR

This door opens when the EJECT button is pressed. Insert cassette tapes with the visible part of the tape downward. When a cassette tape is inserted, the cassette door will automatically close. The cassette door will also close if it is lightly pressed. Unless the unit is powered, the door can not be opened.

> *NOTE:*
> *If the cassette door is closed after turning the power off, the next time the power is turned ON and an operating switch is pressed, the cassette door will open and close once. This is in order to reset the microprocessor to the correct condition, and is not a malfunction.*

❹ STOP SWITCH

Depress this switch to stop the tape travel and to release the operating switches.

❺ PLAY INDICATOR (►)

This indicator lights when the PLAY switch is pressed. It also lights when the REC switch is pressed to set the unit in the recording mode.

❻ PLAY SWITCH

Depress this switch to playback a tape.

❼ REW SWITCH

Depress this switch to rewind the tape. (The tape will travel from right to left.)

❽ REWIND INDICATOR (◄◄)

This indicator lights when the rewind switch (REW) is pressed. The indicator lights also when the music search (MS) ◄◄ switch is pressed.

❾ MUSIC SEARCH INDICATOR (MS)

This indicator lights when either of the music search switches (◄◄ or ►►) is pressed.

❿ FAST FORWARD INDICATOR (►►)

This lights when the fast forward (FF) switch is pressed. When the music search (MS) switch ►► is pressed, the indicator also lights.

⓫ FF SWITCH

Depress this switch to send the tape forward. (The tape will travel from left to right.)

⓬ TAPE INDICATORS (NORM/CrO_2/METAL)

This mechanism uses the sensor holes on the cassette to detect the type of tape being used. It then automatically adjusts the proper recording bias and equalization for the tape. The type of tape is then shown on the tape indicator.

NORM: This indicator lights when normal tapes are used.
CrO_2: This indicator lights when CrO_2 tapes are used.
METAL: This indicator lights when metal tapes are used.

> *NOTE:*
> *When using metal tapes without sensor holes, the tape selector will be set on the CrO_2 position. In this case, optimum recording and erasure may not be possible. We thus recommend that you use metal tapes with sensor holes. Pre-recorded metal tapes can be played as is on this unit.*

⓭ TAPE COUNTER

The numbers change as the tape is running. Tape position is indicated with a four-column digital counter.

⓮ LEVEL METER

This indicates the recording level during recording and the output level during playback. The top part is for the left (L) channel and the bottom part for the right (R) channel.

⓯ RESET BUTTON (RESET)

Press this to reset the tape counter to "0000." Before recording or playback, press this button to reset the tape counter to "0000." It will then be easy to find programs on the tape if a note is made of the tape counter numbers and of the recording or playback contents. The numbers provide you with a guideline for finding programs afterward which you want to listen to.

⓰ TAPE RETURN SWITCH (TAPE RETURN)

When this switch is pressed, the fast forward or rewind functions will begin, sending the tape to the "0000" position, where it will automatically stop. This is a convenient function when you wish to listen immediately to a program you have just recorded, or when you wish to perform repeat play of a certain program.

⓱ RECORDING LEVEL ADJUSTMENT CONTROL (INPUT)

This control is for adjusting general recording levels. The recording level increases when the control is turned clockwise, and decreases when turned counter-clockwise. The control is equipped with a memory marker useful for remembering a predetermined volume level, for example when performing fade-in.

⓲ TIMER SWITCH (TIMER)

This switch is used when an optional audio timer is utilized for unattended recording or wakeup playback.

> *NOTE:*
> *The timer switch should always be in the OFF position when not performing timer recording or playback. If a cassette tape is inserted and the switch is set to the REC or PLAY position, the unit will automatically enter the recording or playback mode whenever the power switch is turned on.*

⓳ PHONES JACK

This is the output jack for the stereo headphones.

⓴ RECORDING INDICATOR (●)

This lights when the unit is set to the recording mode.

㉑ REC SWITCH

This switch is pressed for recording. When the switch is pressed, the tape deck is placed in the recording standby mode, and the pause indicator (▮▮), play indicator (►) and recording indicator (●) will light. To begin recording, press the PAUSE switch to release from the recording standby mode.

> *NOTE:*
> - *The switch cannot be placed in the ON position if the accidental erasure prevention tab on the cassette have been broken off, or if no cassette is in the unit.*
> - *To release the tape deck from the recording mode, press the STOP switch.*

㉒ MUSIC SEARCH SWITCH (MS)

This switch is pressed when searching for the beginning of programs.

㉓ PAUSE INDICATOR (▮▮)

This indicator lights when the PAUSE switch is pressed. It also lights when the REC switch is pressed.

㉔ PAUSE SWITCH

Depress this switch to stop the tape travel temporarily during recording or playback. Depress this switch again to allow the tape to continue to travel.
The tape does not stop during fast forward or rewind operations even when the PAUSE switch is depressed.

㉕ REC MUTE SWITCH (REC MUTE)

When the unit is in the recording mode, if this switch is pressed, 4 seconds of non-recorded interval will be created automatically. This can be used for eliminating unwanted portions during recording, or for producing an appropriate non-recorded interval between programs.
Be careful not to press this swich except when necessary.

㉖ RECORDING MUTE INDICATOR (O)

This indicator flashes when the REC MUTE switch is pressed to create an automatic 4 second non-recorded portion. When a non-recorded portion longer than 4 seconds is created, the indicator changes from flashing to steadily lighted.

㉗ AUTO MONITOR SWITCH (AUTO MONITOR)

This unit is equipped with an automatic monitor function. This means that when the unit is in the recording standby mode, SOURCE MONITOR, or when in the playback mode, TAPE MONITOR is automatically selected. However, when you wish to select TAPE/SOURCE monitoring manually, this switch can be pressed. When the switch is pressed, the unit will switch to the mode opposite to that of prior to pressing the switch. For example, if the unit is in the TAPE MONITOR mode before the switch is pressed, it will switch to the SOURCE MONITOR.
The [TAPE]—MONITOR—[SOURCE] indicators in the level meter will light to show the monitoring mode.

㉘ DOLBY NR SWITCH (DOLBY NR ON/OFF)

Press this switch ON when using the Dolby NR system for recording or playback. When the Dolby NR system is ON, the Dolby indicator B or C lights.

"Dolby" and the double-D symbol are trademarks of Dolby Laboratories Licensing Corporation.
Noise Reduction manufactured under license from Dolby Laboratories Licensing Corporation.

㉙ DOLBY INDICATORS (DOLBY NR)

These light when the DOLBY NR switch is set to ON .
[B]: This lights when the B type Dolby noise reduction system is operating.
[C]: This lights when the C type Dolby noise reduction system is operating.

㉚ DOLBY B/C SELECTOR SWITCH (DOLBY NR B/C)

This deck is equipped both type B and type C Dolby noise reduction systems. After the DOLBY NR ON/OFF switch is pressed, select type B or C using this switch. The Dolby indicator corresponding to the switch position lights.

㉛ MULTIPLEX INDICATOR (MPX)

This indicator lights when the Multiplex filter (MPX FILTER) switch is pressed ON.

㉜ MULTIPLEX FILTER SWITCH (MPX FILTER)

Push this switch when recording FM stereo broadcasts or TV programs using the Dolby noise reduction system.
Contained among the FM stereo signals are a 19 kHz pilot signal and the 38 kHz subcarrier. The MPX FILTER switch is pressed in order to safeguard against incorrect operation of the Dolby circuit due to these signals. Release the switch for any other recording. The switch does not function during playback.

㉝ OUTPUT LEVEL VOLUME CONTROLS (OUTPUT LEVEL)

These controls are for adjusting the deck's output level. When the controls are turned clockwise, output level is increased.

NOTE:
- *The movement of the level meters is not affected by rotation of the output level volume controls.*
- *If the output level control is set at the minimum "0" position, no sound will be heard, even if the amplifier's volume control is rotated.*

㉞ MONITOR INDICATOR (MONITOR)

This indicator shows the monitoring mode selected by the automatic monitoring function.

DOLBY TYPES B AND C

The tape hiss (noise mainly in the high-frequency range) heard when a recorded tape is played back can be very irritating. This is particularly the case in pianissimo treble sections where violins, for instance, are heard in an orchestral piece. The Dolby noise reduction system was developed in order to reduce this tape hiss. The Dolby type B system is already widely used for noise reduction but this unit features not only this type but also type C.
What the system does is this: when the midrange and treble sections, where the tape hiss is noticeable, are lower than the prescribed level, it records those sections at a level higher than the recording level at the "OFF" position of the Dolby system. During playback, the level is reduced by an amount equivalent to this increase and the sound is played back with a reduction in tape hiss. This operation is performed automatically in accordance with the strength of the input signals, and it is possible to improve the signal-to-noise ratio at frequencies over 5 kHz by about 10 dB. As a result, the system is really effective for the recording and playback of ordinary broadcasts and records, etc.
However, when recording a program source with a wide dynamic range, a greater reduction in the noise is required. It was for this reason that the Dolby type C system was developed.
The big difference between type B and type C is that the improvement in the high-frequency range noise is approximately a high 19 dB, compared with the "OFF" position of the Dolby system, and that the dynamic range is extended without causing the sound quality to change (without generating breathing noise).

- A note should be made of each tape recorded with the Dolby system so that it is not mistakenly played back with the Dolby system off.
- Always play back tapes with the same Dolby function which was used when they were recorded. Playing back a tape recorded with the Dolby system at the OFF (non-Dolby) position or playing back a normal tape with the Dolby system will not result in the faithful reproduction of the original sound.

4. DISASSEMBLY

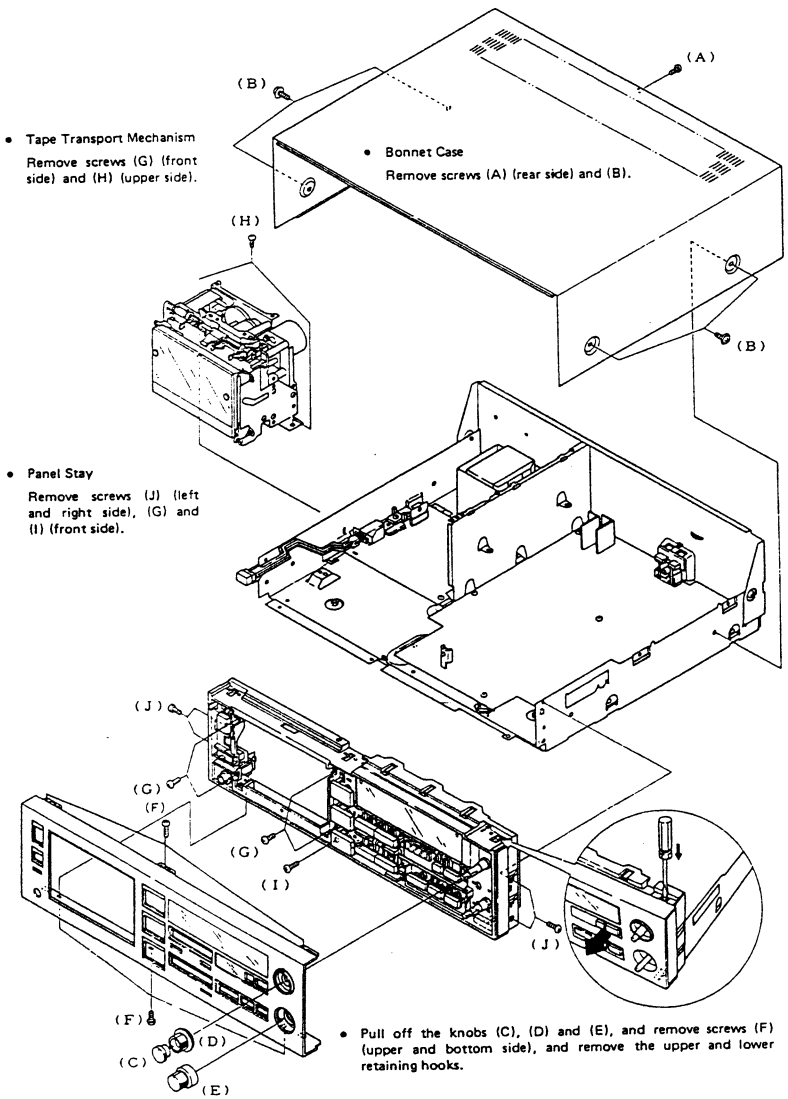

- Tape Transport Mechanism
  Remove screws (G) (front side) and (H) (upper side).
- Bonnet Case
  Remove screws (A) (rear side) and (B).
- Panel Stay
  Remove screws (J) (left and right side), (G) and (I) (front side).
- Pull off the knobs (C), (D) and (E), and remove screws (F) (upper and bottom side), and remove the upper and lower retaining hooks.

5. PARTS LOCATION

NOTES:
- *Parts without part number cannot be supplied.*
- *The ⚠ mark found on some component parts indicates the importance of the safety factor of the part. Therefore, when replacing, be sure to use parts of identical designation.*
- *For your Parts Stock Control, the fast moving items are indicated with the marks ★★ and ★.*
  ★★ GENERALLY MOVES FASTER THAN ★.
  This classification shall be adjusted by each distributor because it depends on model number, temperature, humidity, etc.

Front Panel View

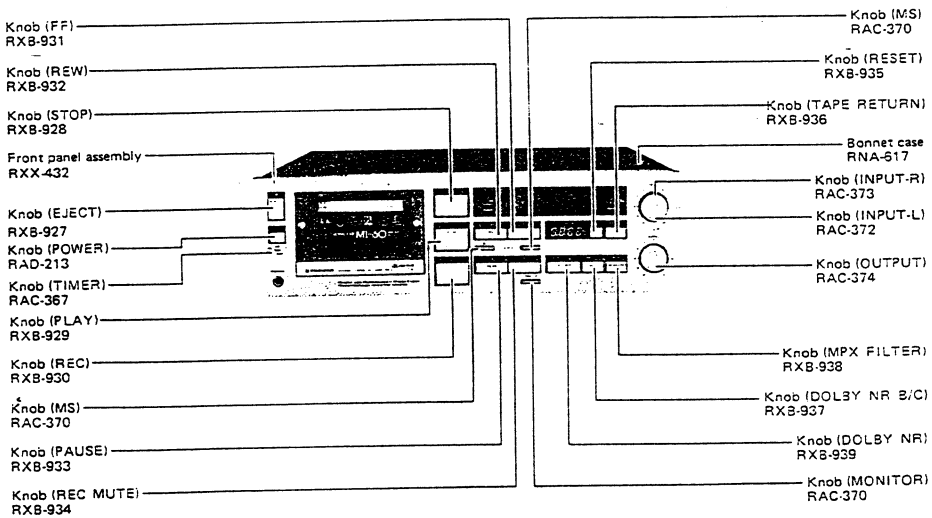

Front View with Panel Removed

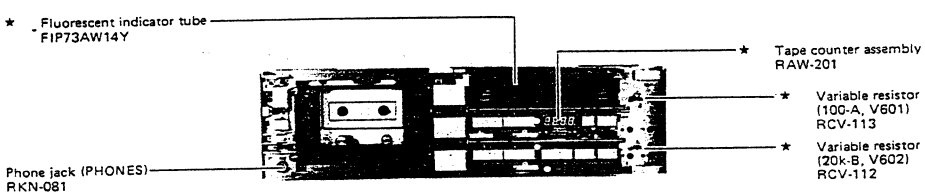

Top View

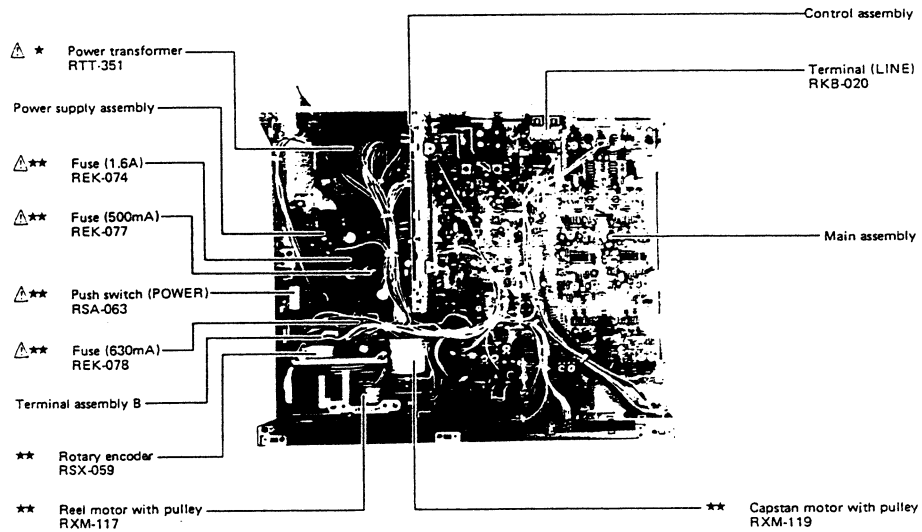

6. EXPLODED VIEW

- *Parts without part number cannot be supplied.*
- *The ⚠ make found on some component parts indicates the importance of the safety factor of the part. Therefore, when replacing, be sure to use parts of identical designation.*
- *For your Parts Stock Control, the fast moving items are indicated with the marks ★★ and ★.*
  ★★ GENERALLY MOVES FASTER THAN ★.
  This classification shall be adjusted by each distributor because it depends on model number, temperature, humidity, etc.

Mark	No.	Part No.	Description
	1	RNA-617	Bonnet case
	2	FBT40P080FNi	Screw 4 x 8
	3	BBZ30P080FZK	Screw 3 x 8
	4	RXB-927	Knob (EJECT)
	5	RAC-367	Knob (TIMER)
	6	PMZ26P060FMC	Screw 2.6 x 6
	7	RBN-006	Nut
	8	RXB-928	Knob (STOP)
	9	RXB-929	Knob (PLAY)
	10	RXB-930	Knob (REC)
	11	RAC-370	Knob (MS,MONITOR)
	12	RBL-056	Knob spring A
	13	RAW-201	Tape counter assembly
	14	RNL-797	Meter screen
	15	RXX-432	Front panel assembly
	16	RAH-487	Door frame
	17	RNL-761	Door
	18	RBA-085	Dressing screw
	19	RBF-075	Washer
	20	RAH-490	Inscription plate
	21	RAC-372	Knob (INPUT L)
	22	RAC-373	Knob (INPUT R)
	23	RNL-764	Ring with hook
	24	RBL-054	Marker spring
	25	RBF-072	Marker washer
	26	RED-203	Friction felt
	27	RAC-371	Marker
	28	RAC-374	Knob (OUTPUT)
	29	RXB-939	Knob (DOLBY NR)
	30	RXB-937	Knob (B/C)
	31	RXB-938	Knob (MPX FILTER)
	32	RBL-060	Knob spring B
	33	RXB-932	Knob (REW)
	34	RXB-931	Knob (FF)
	35	RXB-935	Knob (RESET)
	36	RXB-936	Knob (TAPE RETURN)
	37	RXB-933	Knob (PAUSE)
	38	RXB-934	Knob (REC MUTE)
	39	RXX-431	Cassette plate assembly
★	40	SLF-201C	LED
	41	VBT30P060FMC	Screw 3 x 6
	42	RAD-213	Knob (POWER)
	43	RNL-766	Rod
	44	RBM-003	Nylon rivet
	45	RNK-511	Upper guide
	46	RNH-184	Cord fixer
	47	VBZ40P080FMC	Screw 4 x 8
⚠ ★	48	RTT-351	Power transformer (120V)
	49	REB-508	Insulator
	50	RNL-792	Stud
⚠	51	REC-369	Foot assembly
⚠	52	RDG-048	AC power cord
⚠	53	REC-395	Strain relief
	54	BBZ30P060FMC	Screw
	55	REC-371	Wire tie
	56	RBF-078	Washer
	57	ATZ30P080FMC	Screw 3 x 8
	58	WA30W120R100	Washer
	59	RBL-059	Grounding spring
	60	RBF-080	Washer
⚠ ★★	61	REK-078	Fuse (630mA)
⚠ ★★	62	REK-077	Fuse (500mA)
⚠ ★★	63	REK-074	Fuse (1.6A)
	64	RBM-001	Plastic rivet
	65		
	101		Panel stay assembly
	102		Eject switch assembly
	103		Knob cushion A
	104		Main shaft
	105		Knob cushion B
	106	.....	
	107		Timer switch assembly
	108		Headphones jack assembly
	109		Level meter assembly
	110		Operation switch assembly
	111		Level control assembly
	112		Cushion
	113		Control assembly
	114		Power supply assembly
	115		P.C. board holder
	116		Chassis
	117		Cushion
	118		Transistor A assembly
	119		Transistor B assembly
	120		Main assembly
	121		Phono jack spacer
	122		Cushion D

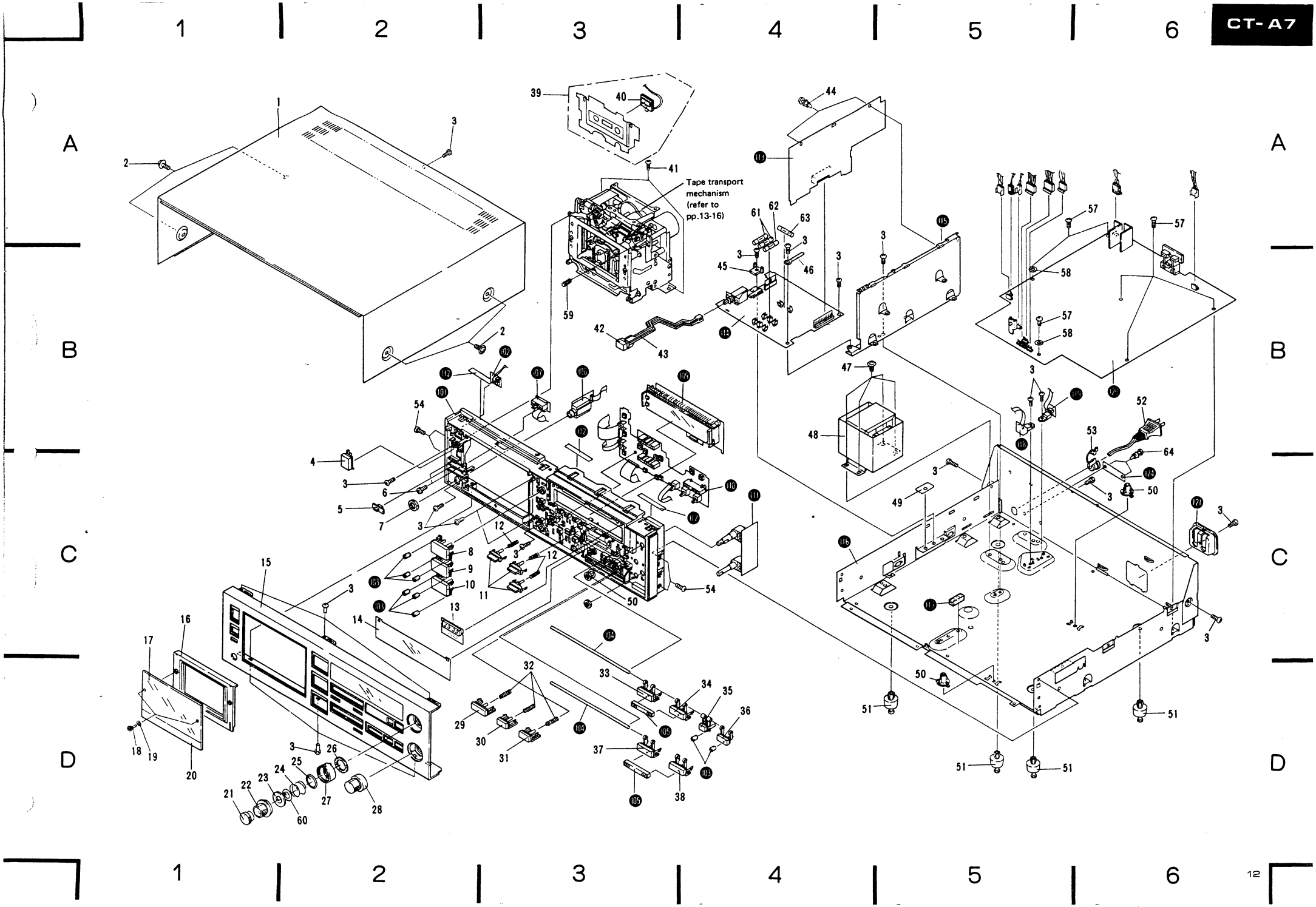
Tape transport mechanism (refer to pp.13-16)

Tape Transport Mechanism

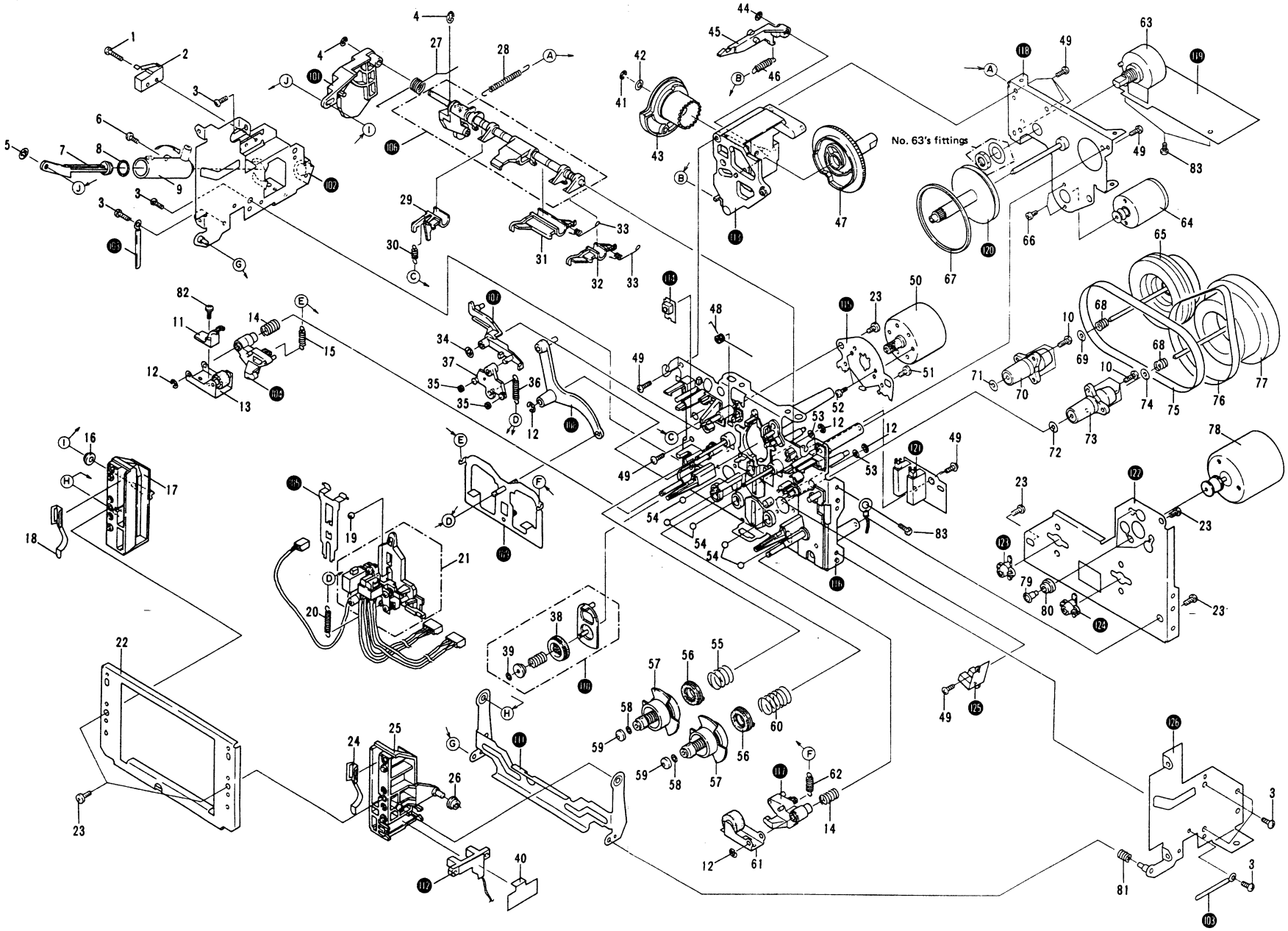

- *Parts without part number cannot be supplied.*
- *The ⚠ mark found on some component parts indicates the importance of the safety factor of the part. Therefore, when replacing, be sure to use parts of identical designation.*
- *For your Parts Stock Control, the fast moving items are indicated with the marks ★★ and ★.*
  ★★ GENERALLY MOVES FASTER THAN ★.
  This classification shall be adjusted by each distributor because it depends on model number, temperature, humidity, etc.
- *Precaution when replacing heads (*1)*
  Because of the very high precision requirements in tape heads, replacement components are supplied as assembly which also include the head base. Under no circumstances must this tape head assembly (RXX-433) be disassembled.

Tape Transport Mechanism

Mark	No.	Part No.	Description
	1	BMZ23P100FZK	Screw 2.3 x 10
★★	2	RSF-031	Microswitch (S084)
	3	VCT30P060FZK	Screw 3 x 6
	4	YE30FUC	Washer E-type
	5	YS24FBT	Washer C-type
	6	VCZ26P080FMC	Screw 2.6 x 8
	7	RNL-739	Piston
	8	REB-447	O-ring
	9	RNL-740	Cylinder
	10	PMA26P050FZK	Screw 2.6 x 5
	11	RNL-016	Tape guide
	12	YE25FUC	Washer E-type
★★	13	RXB-877	Pinch roller arm L assembly
	14	RBL-030	Pinch thrust spring
	15	RBL-029	Sub-pinch spring
	16	RNL-742	Collar
	17	RNL-736	Pocket L
	18	RBL-027	Pocket spring
	19	REF-022	Steel ball (ϕ3)
	20	RBL-037	Head base spring
★★	21	RXX-433 (*1)	Head base assembly
	22	RNH-305	Pocket frame
	23	BBZ30P080FZK	Screw 3 x 8
	24	RBL-027	Pocket spring
	25	RNL-737	Pocket R
	26	RNL-742	Collar
	27	RBL-039	Eject spring
	28	RBL-040	Half hold spring
	29	RNL-733	REC detector arm
	30	RBL-041	REC detector arm spring
	31	RNL-735	METAL detector arm
	32	RNL-734	CrO_2 detector arm
	33	RBL-042	Detector arm spring
	34	YS24FBT	Washer C-type
★	35	REB-511	Brake shoe
	36	RBL-038	Brake spring
	37	RNL-723	Brake
★★	38	RNL-549	Take-up idler
	39	WA15D030D050	Washer
	40	REC-419	Cover
	41	YE20FUC	Washer E-type
	42	WA26N070W040	Washer
	43	RXB-884	Side cam gear assembly
	44	YS24FBT	Washer C-type
	45	RNL-741	Lock lever
	46	RBL-043	Lock lever spring
	47	RNL-729	Cam gear
	48	RBL-033	Idler pressure spring
	49	BBZ26P080FZK	Screw 2.6 x 8
★★	50	RXM-117	Reel motor with pulley
	51	BMZ30P080FZK	Screw 3 x 8
	52	BMZ26P030FZK	Screw 2.6 x 3
	53	WA32D080D050	Washer
	54	REF-023	Steel ball (ϕ4)
	55	RBL-031	BT spring A
	56	RXB-751	BT disk assembly
	57	RXB-874	Reel base assembly
	58	RBF-079	Washer
	59	RNK-815	Cap B
	60	RBL-032	BT spring B
	61	RXB-876	Pinch roller arm R assembly
	62	RBL-028	Pinch spring
★★	63	RSX-059	Rotary encoder
★★	64	RXM-113	Assist motor with pulley
	65	RXB-889	Sub-flywheel assembly
	66	BMZ20P030FZK	Screw 2 x 3
★★	67	REB-502	Drive belt
	68	RBL-044	Thrust spring
	69	RBF-070	Thrust washer B
	70	RXB-466	Capstan holder B
	71	RBF-077	Oil stopper washer
	72	RBF-030	Oil stopper
	73	RXB-362	Capstan holder A
	74	RBF-069	Thrust washer A
★★	75	REB-509	Capstan belt A
★★	76	REB-501	Capstan belt
	77	RXB-888	Flywheel assembly
★★	78	RXM-119	Capstan motor with pulley
	79	RBA-064	Screw
	80	REB-408	Rubber bush

Mark	No.	Part No.	Description
	81	RBL-045	Spring
	82	PMA26P060FZK	Screw 2.6 x 6
	83	VCZ30P060FMC	Screw 3 x 6
	84	.....	
	85	.....	
	101		Eject lever
	102		Door frame L assembly
	103		Cord fixer
	104		Pressure arm L
	105		Head base hold spring
	106		Shift shaft assembly
	107		Brake lever
	108		Pinch lever assembly
	109		Pinch base assembly
	110		Take-up idler assembly
	111		Door arm
	112		Cassette half sensor assembly
	113		Gear base assembly
	114		REC detector assembly
	115		Reel motor base
	116		Chassis
	117		Pressure arm R
	118		Gear chassis
	119		Terminal assembly
	120		Second pulley assembly
	121		Tape selector assembly
	122		Motor chassis
	123		Thrust holder
	124		Thrust holder
	125		Rotation sensor assembly
	126		Door frame R assembly
	127		Pocket frame

7. PACKING

Packing

Mark	No.	Part No.	Description
	1	RHG-688	Packing case
	2	RHA-259	Pad
	3	RHX-030	Sheet
	4	RDE-010	Connection cord
	5	RRB-224	Operating instructions (English)

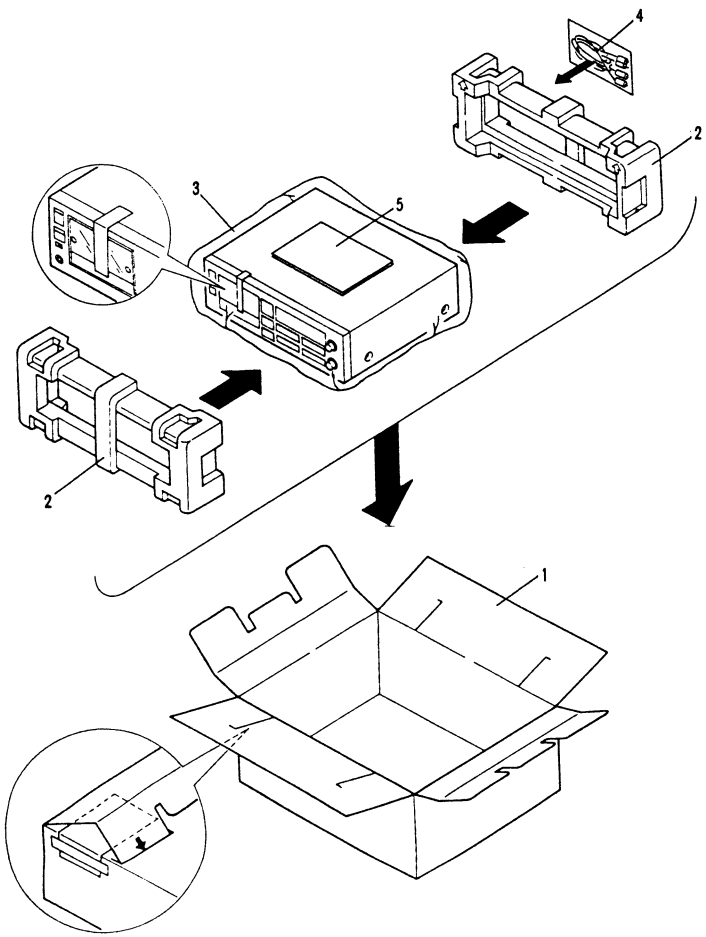

External Appearance of Transistors and ICs

2SK389

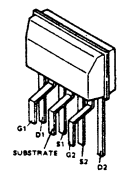

2SC2673

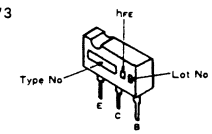

PD4036

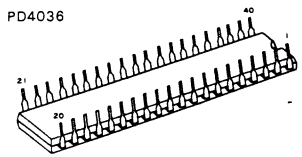

2SA798

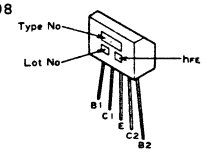

2SD1189

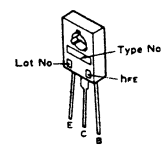

BA6251

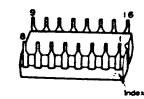

2SC1740LN
2SA933LN
2SD1302

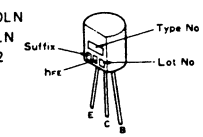

M5218L

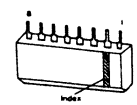

NJM2903D

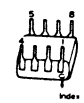

HA12058NT

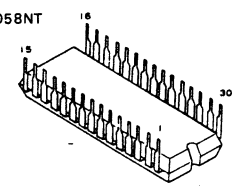

TC4066BP

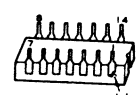

AN6870N

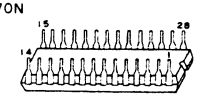

2SD880

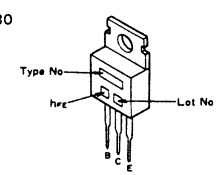

BA6109

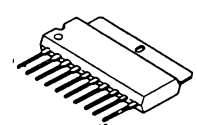

BA335
BA715

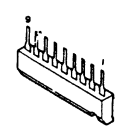

2SD1406

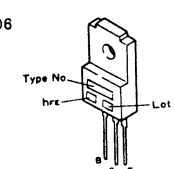

LC7800

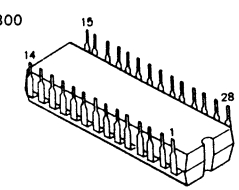

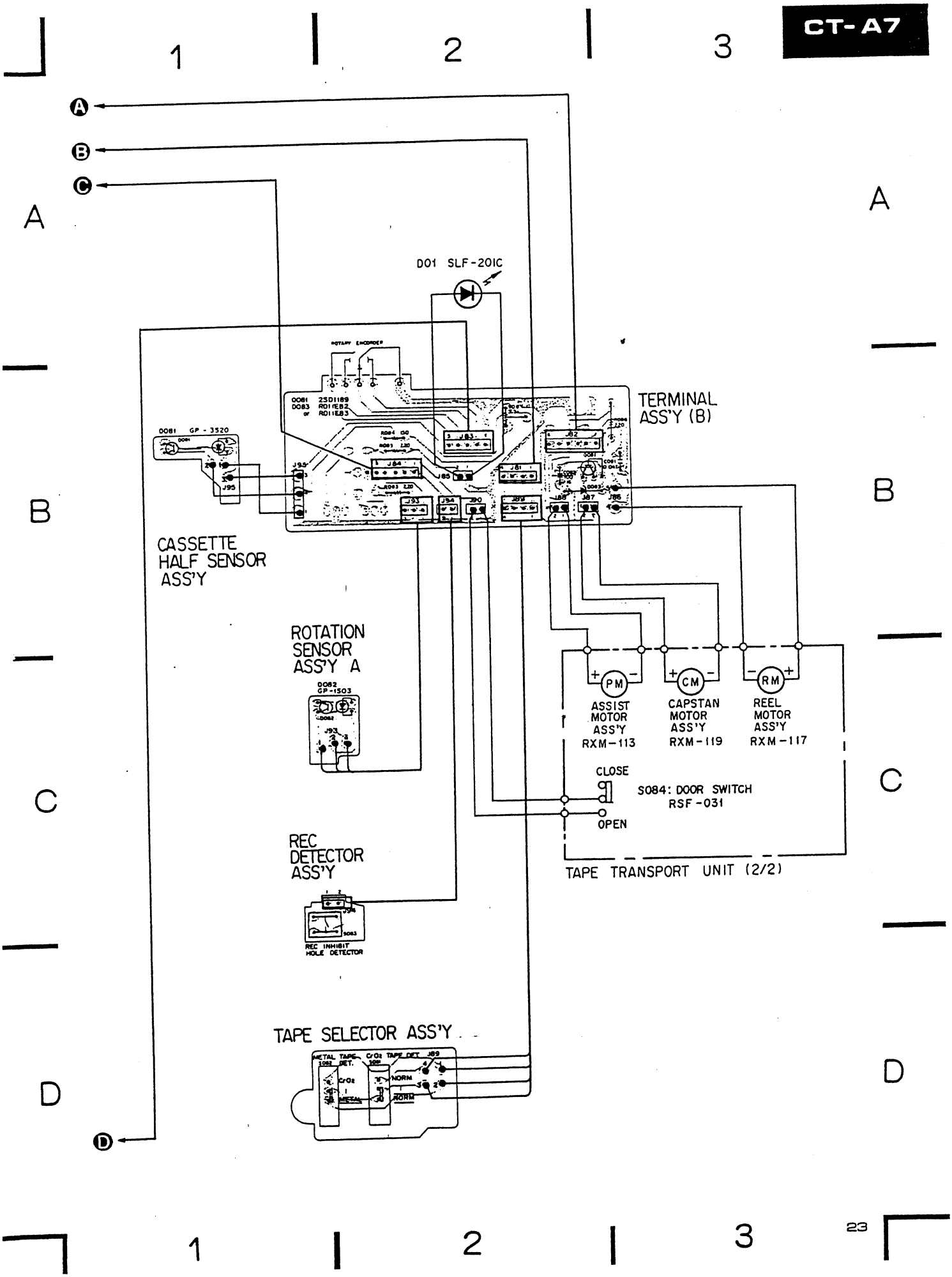
1
2
3
A
B
C
D
D01 SLF-201C
TERMINAL ASS'Y (B)
CASSETTE HALF SENSOR ASS'Y
ROTATION SENSOR ASS'Y A
REC DETECTOR ASS'Y
TAPE SELECTOR ASS'Y
ASSIST MOTOR ASS'Y RXM-113
CAPSTAN MOTOR ASS'Y RXM-119
REEL MOTOR ASS'Y RXM-117
CLOSE
OPEN
S084: DOOR SWITCH RSF-031
TAPE TRANSPORT UNIT (2/2)

8. P.C.BOARDS CONNECTION DIAGRAM

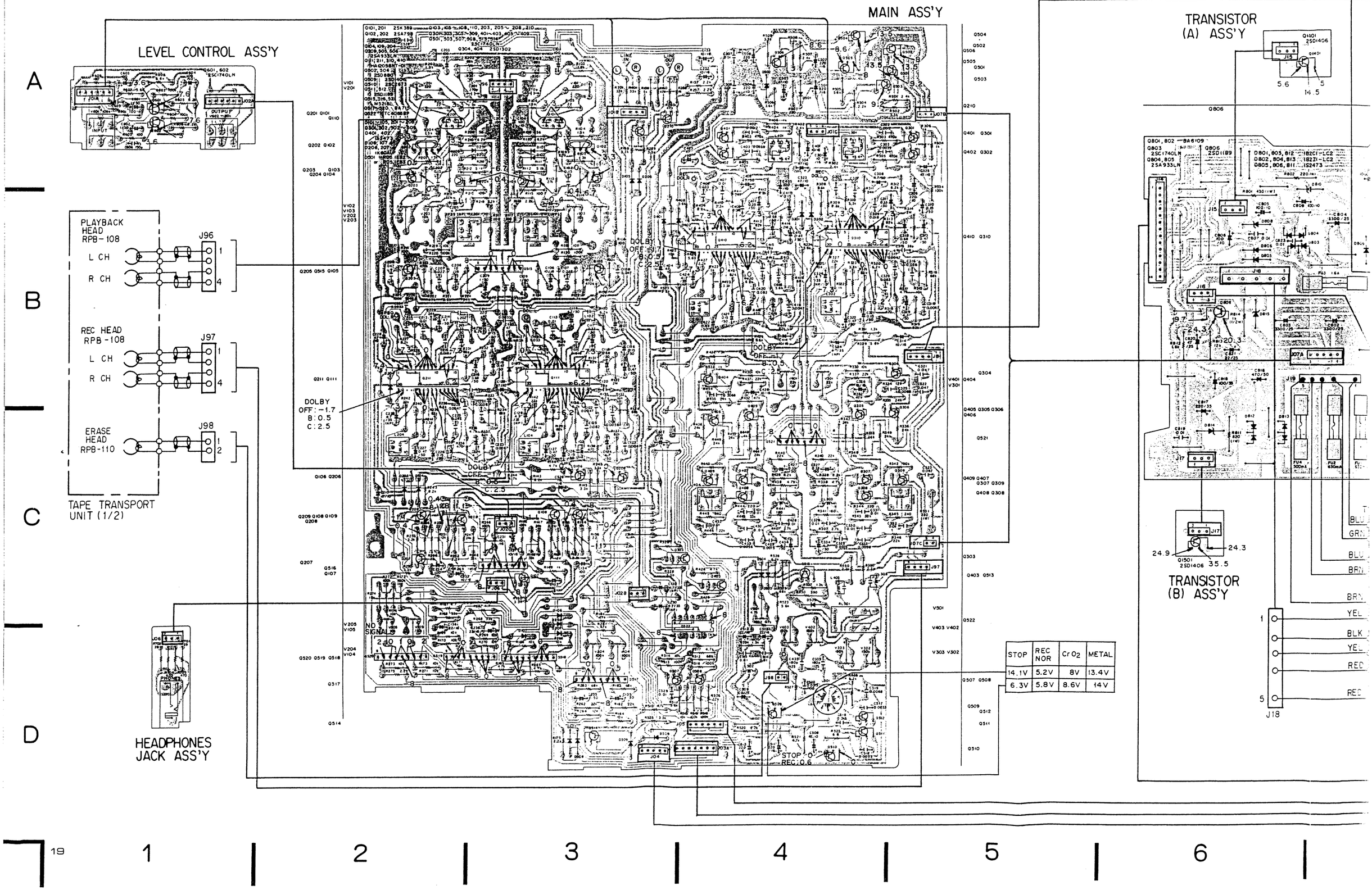

STOP	REC NOR	Cr O_2	METAL
14.1V	5.2V	8V	13.4V
6.3V	5.8V	8.6V	14V

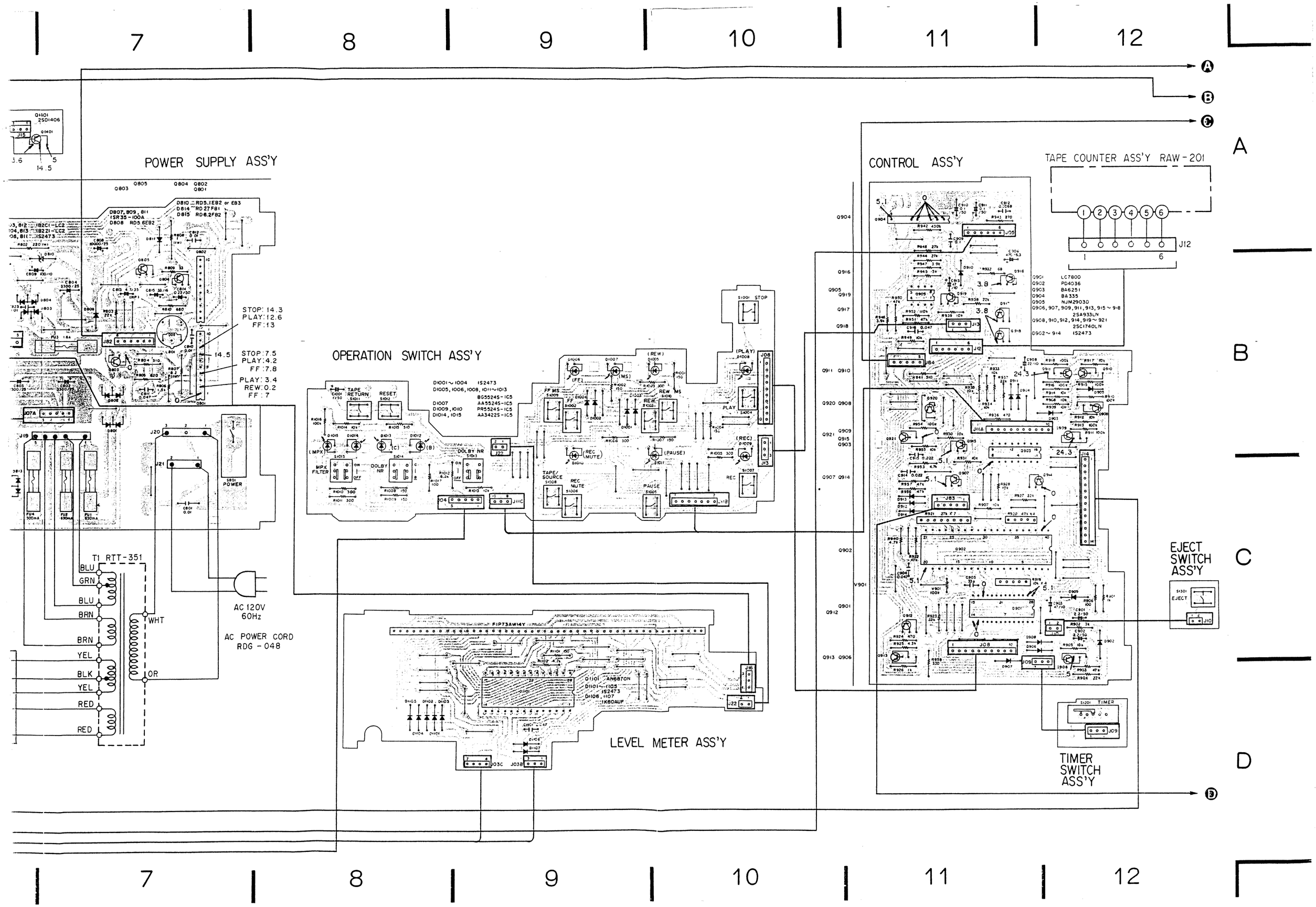
POWER SUPPLY ASS'Y
OPERATION SWITCH ASS'Y
CONTROL ASS'Y
TAPE COUNTER ASS'Y RAW-201
LEVEL METER ASS'Y
EJECT SWITCH ASS'Y
TIMER SWITCH ASS'Y
TI RTT-351
AC 120V 60Hz
AC POWER CORD RDG-048
STOP: 14.3
PLAY: 12.6
FF: 13
STOP: 7.5
PLAY: 4.2
FF: 7.8
PLAY: 3.4
REW: 0.2
FF: 7
D1001~1004 1S2473
D1005, 1006, 1008, 1011~1013 BG5245-1C5
D1007 AA5245-1C5
D1009, 1010 PR5245-1C5
D1014, 1015 AA34225-1C5
Q901 LC7800
Q902 PD4036
Q903 BA6251
Q904 BA335
Q905 NJM29030
Q906, 907, 909, 911, 913, 915~918 2SA933LN
Q908, 910, 912, 914, 919~921 2SC1740LN
Q902~914 1S2473

9. ELECTRICAL PARTS LIST

NOTES:

*(*1) Precaution when replacing the Dolby NR IC in CT-A7*

Because the CT-A7 and CT-A9 tape decks are 3-head decks, it is necessary to use select Dolby NR ICs in pairs in the recording and playback circuits to ensure that performance is maintained.

- Pair-grading ranks (Six ranks)

HA12058NT-01 →	HA12058NT-R	(Red)
	HA12058NT-V	(Violet)
	HA12058NT-G	(Green)
	HA12058NT-Y	(Yellow)
Denotes pair-graded component.	HA12058NT-O	(Orange)
	HA12058NT-B	(Blue)

- Pair-grading rank indication

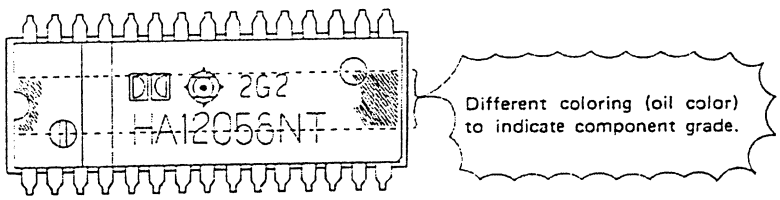

Hence, when replacing Dolby NR ICs, use the same grade (same color) components for recording/playback.

*(*2) Precaution when replacing heads*

Because of the very high precision requirements in tape heads, replacement components are supplied as assembly which also include the head base. Under no circumstances must this tape head assembly (RXX-433) be disassembled.

NOTES:

- *When ordering resistors, first convert resistance values into code form as shown in the following examples.*

  Ex. 1 When there are 2 effective digits (any digit apart from 0), such as 560 ohm and 47k ohm (tolerance is shown by J = 5%, and K = 10%).

560Ω	56×10^1	561	RD¼PS 5 6 1 J
47kΩ	47×10^3	473	RD¼PS 4 7 3 J
0.5Ω	0R5		RN2H 0 R 5 K
1Ω	010		RS1P 0 1 0 K

  Ex. 2 When there are 3 effective digits (such as in high precision metal film resistors).

5.62kΩ	562×10^1	5621	RN¼SR 5 6 2 1 F

- *The ⚠ mark found on some component parts indicates the importance of the safety factor of the part. Therefore, when replacing, be sure to use parts of identical designation.*
- *For your Parts Stock Control, the fast moving items are indicated with the marks ★★ and ★.*

  ★★ GENERALLY MOVES FASTER THAN ★.

  This classification shall be adjusted by each distributor because it depends on model number, temperature, humidity, etc.

Miscellaneous Parts

P.C. BOARD ASSEMBLIES

Mark	Part No.	Symbol & Description
	Non supply	Terminal assembly B
	Non supply	REC detector assembly
	Non supply	Tape selector assembly
	Non supply	Cassette half sensor assembly
	Non supply	Rotation sensor assembly
	Non supply	Main assembly
	Non supply	Level control assembly
	Non supply	Headphones jack assembly
	Non supply	Power supply assembly
	Non supply	Control assembly
	Non supply	Operation switch assembly
	Non supply	Timer switch assembly
	Non supply	Eject switch assembly
	Non supply	Transistor A assembly
	Non supply	Transistor B assembly
	Non supply	Level meter assembly

FUSES

Mark	Part No.	Symbol & Description	
⚠★★	REK-078	FU1, FU2	Fuse (630mA)
⚠★★	REK-074	FU3	Fuse (1.6A)
⚠★★	REK-077	FU4	Fuse (500mA)

OTHERS

Mark	Part No.	Symbol & Description	
⚠ ★	RTT-351	T1	Power transformer (120V)
⚠	RDG-048		AC power cord
★	SLF-201C	D01	LED (Tape illumination)
★★	RXX-433 (*1)		Head base assembly
	RAW-201		Tape counter assembly
★★	RXM-119	CM	Capstan motor with pulley
★★	RXM-113	PM	Assist motor with pulley
★★	RXM-117	RM	Reel motor with pulley
★★	RSF-031	S084	Microswitch
★★	RSX-059		Rotary encoder

Main Assembly

SEMICONDUCTORS

Mark	Part No.	Symbol & Description
★★	2SK389	Q101, Q201
★★	2SA798	Q102, Q202
★★	2SC1740LN	Q103, Q105 – Q108, Q110, Q203, Q205 – Q208, Q210, Q301 – Q303, Q305 – Q309, Q401 – Q403, Q405 – Q409, Q501, Q503, Q507, Q508, Q513, Q514
★★	2SA933LN	Q104, Q109, Q204, Q209, Q505, Q506
★★	HA12058NT-01 (*2)	Q111, Q211, Q310, Q410
⚠★★	2SD880	Q502, Q504
⚠★★	2SD1406	Q509
★★	2SC2673	Q510
★★	2SD1189	Q511, Q512
★★	M5218L	Q515, Q516, Q521
★★	BA715	Q517 – Q520
★★	TC4066BP	Q522
★★	2SD1302	Q304, Q404
★	1S2473	D101 – D105, D201 – D205, D301, D302, D401, D402, D502 – D509
★	1K60AUF	D106, D107, D206, D207
⚠ ★	RD5.1EB2 (RD5.1EB3)	D501

COILS, FILTERS

Mark	Part No.	Symbol & Descripton	
	RTF-162	L101, L201	Trap coil
	RTF-153	L102, L103, L202, L203	Trap coil
	RTF-159	L104, L204, L302, L402	SS coil
	RTF-154	L301, L401	MPX filter
	RTF-125	L303, L403	Peaking coil
	RTF-148	L304, L404	Peaking coil
	RTF-152	L305, L405	Trap coil
	RTD-029	L501	Oscillator coil
	RTF-101	L502	Line coil

CAPACITORS

Mark	Part No.	Symbol & Description
	CQSA 271K 50	C101, C201
	CEA 221M 10	C305
	CEANP 4R7M 35	C105, C129, C130, C205, C229, C230, C324, C424, C524
	CEA R15M 50	C116, C126, C216, C226, C310, C321, C410, C421
	CEA R33M 50	C117, C217, C311, C327, C411, C427
	CEA R47M 50	C119, C127, C219, C227, C313, C322, C413, C422
	CEA R68M 50	C118, C218, C312, C412
	CEA 010M 50	C109, C135, C209, C235
	CEA 4R7M 50	C114, C124, C214, C224, C308, C319, C334, C408, C419, C434
	CEA 100M 16	C106, C131 – C133, C206, C231 – C233, C301, C314, C326, C401, C414, C426, C526
	CEA 220M 16	C136, C236, C512, C513
	CEA 470M 10	C110, C128, C210, C228, C304, C323, C404, C423, C503, C508, C525
	CEA 101M 25	C509
	CEA 101M 10	C103, C104, C134, C203, C204, C243
	CEA 221M 16	C501, C502, C510, C511
	CEA 221M 10	C111, C211, C405, C504, C506
	CQMA 122J 50	C302, C402
	CQMA 392J 50	C303, C403
	CQMA 332K 50	C516, C517
	CQMA 472K 50	C122, C123, C222, C223, C317, C318, C417, C418
	CQMA 562J 50	C121, C221, C316, C333, C416, C433
	CQMA 682J 50	C325, C425, C519
	CQMA 103J 50	C113, C213, C307, C328, C330 – C332, C407, C428, C430 – C432
	CQMA 153J 50	C518
	CQMA 333J 50	C112, C212, C306, C406
	CQMA 183K 50	C115, C215, C309, C409
	CQMA 223J 50	C107, C207
	CQMA 823J 50	C125, C225, C320, C420
	CQMA 154K 50	C102, C202
	CQPA 153J 100	C520
	CQSA 181K 125	C335, C435
	CQMA 152J 50	C329, C429
	CEA 101M 16	C527
	CQMA 332J 50	C533, C534
	CCPSL 390J 50	C120, C220, C315, C415
	CKDYF 103Z 50	C505, C507, C514, C515, C529
	CKDYF 473Z 50	C108, C208, C521 – C523, C528

RESISTORS

Note: When ordering resistors, convert the resistance value into code form, and then rewrite the part no. as before

Mark	Part No.	Symbol & Description	
★	RCP-140	V101, V201	Semi-fixed 220-B
★	RCP-144	V102, V202	Semi-fixed 1k-B
★	RCP-149	V103, V105, V203, V205	Semi-fixed 10k-B
★	RCP-154	V104, V204	Semi-fixed 100k-B
★	RCP-150	V301, V401	Semi-fixed 22k-B
★	RCP-155	V302, V303, V402, V403	Semi-fixed 150k-B
★	RCP-147	V501	Semi-fixed 4.7k-B
⚠	RS1LF □□□J	R530, R531	
	RD1/4PM □□□J	Other resistors	

OTHERS

Mark	Part No.	Symbol & Description	
	RKB-020	Terminal (LINE)	
★★	RSR-037	RL501	Miniature relay
	RNH-209	Shield Case	

Level Control Assembly

SEMICONDUCTORS

Mark	Part No.	Symbol & Description
★★	2SC1740LN	Q601, Q602

RESISTORS

Note: When ordering resistors, convert the resistance value into code form, and then rewrite the part no. as before

Mark	Part No.	Symbol & Description	
★	RCV-113	V601	Variable 100k-A
★	RCV-112	V602	Variable 20k-B
	RD1/4PM □□□J	R601 – R609	

CAPACITORS

Mark	Part No.	Symbol & Description
	CEA 010M 50	C601, C602,
	CEA 101M 10	C603, C604
	CCDSL 151K 50	C605, C606

Headphones Jack Assembly

RESISTORS

Mark	Part No.	Symbol & Description
	RD1/4PM 390J	R701, R702
	RD1/4PM 471J	R703, R704

OTHER

Mark	Part No.	Symbol & Description
	RKN-081	Phone jack (PHONES)

Control Assembly

SEMICONDUCTORS

Mark	Part No.	Symbol & Description
★★	LC7800	Q901
★★	PD4036	Q902
★★	BA6251	Q903
★★	BA335	Q904
★★	NJM2903D	Q905
★★	2SA933LN	Q906, Q907, Q909, Q911, Q913, Q915 – Q918
★★	2SC1740LN	Q908, Q910, Q912, Q914, Q919 – Q921
★	1S2473	D902 – D914

CAPACITORS

Mark	Part No.	Symbol & Description
	CEA 2R2M 50	C901, C902
	CEA 220M 10	C908
	CEA 470M 10	C903, C913
	CEA R10M 50	C910, C911
	CEA 471M 6R3	C906
	CQMA 223K 50	C914, C915
	CQMA 104J 50	C909
	CQMA 682K 50	Q912
	CCDCH 330J 50	C905
	CKDYF 473Z 50	C904, C916

RESISTORS

Note: When ordering resistors, convert the resistance value into code fom, and then rewrite the part no. as before.

Mark	Part No.	Symbol & Description
★	RCP-154	V901 Semi-fixed 100k-B
	RM4-103J	R919
	RM4-473J	R920
	RM7-473J	R921
	RD1/4PM □□□J	Other resistors

Level Meter Assembly

SEMICONDUCTORS

Mark	Part No.	Symbol & Description
★★	AN6870N	Q1101
★	1S2473	D1101 - D1105
★	1K60AUF	D1106, D1107

CAPACITOR

Mark	Part No.	Symbol & Description
	CQMA 473K 50	C1101

RESISTORS

Note: When ordering resistors, convert the resistance value into code form, and then rewrite the part no. as before.

Mark	Part No.	Symbol & Description
	RD1/4PM □□□J	R1101, R1102

OTHERS

Mark	Part No.	Symbol & Description
★	FIP73AW14Y	Fluorescent indicator tube

Terminal Assembly B

SEMICONDUCTORS

Mark	Part No.	Symbol & Description
★★	2SD1189	Q081
★	RD11E (RD11EB2) (RD11EB3)	D083

CAPACITORS

Mark	Part No.	Symbol & Description
	CKDYF 473Z 50	C081
	CEA 101M 16	C082

RESISTORS

Note: When ordering resistors, convert the resistance value into code form, and then rewrite the part no. as before.

Mark	Part No.	Symbol & Descripton
★	RCP-190	V081 Semi-fixed 3.3k-B
	RD1/6PM □□□J	R083 – R085
	RD1/4PM □□□J	R086

REC Detector Assembly

SWITCH

Mark	Part No.	Symbol & Description
★★	RSG-143	S083 Push switch

Operation Switch Assembly

SEMICONDUCTORS

Mark	Part No.	Symbol & Description
★	1S2473	D1001 – D1004
★	BG5524S-1C5	D1005, D1006, D1008, D1011 – D1013
★	AA5524S-1C5	D1007
★	PR5524S-1C5	D1009, D1010
★	AA3422S-1C5	D1014, D1015

SWITCHES

Mark	Part No.	Symbol & Description
★★	RSG-155	S1001, S1004, S1007 Push switch
★★	RSG-143	S1002, S1003, S1005, S1006, S1008 – S1012 Push switch
★★	RSG-149	S1013 – S1015 Push switch

CAPACITOR

Mark	Part No.	Symbol & Description
	CEA 010M 50	C1001

RESISTORS

Note: When ordering resistors, convert the resistance value into code form, and then rewrite the part no. as before.

Mark	Part No.	Symbol & Description
	RD1/4PM □□□J	R1001 – R1017

Timer Switch Assembly

SWITCH

Mark	Part No.	Symbol & Description
★★	RSH-064	S1201 Slide switch

Eject Switch Assembly

SWITCH

Mark	Part No.	Symbol & Description
★★	RSG-143	S1301 Push switch

Transistor A Assembly

SEMICONDUCTOR

Mark	Part No.	Symbol & Description
⚠★★	2SD1406	Q1401

Transistor B Assembly

SEMICONDUCTOR

Mark	Part No.	Symbol & Description
⚠★★	2SD1406	Q1501

Tape Selector Assembly

SWITCHES

Mark	Part No.	Symbol & Description
★★	RSH-070	S081, S082 Slide switch

Cassette Half Sensor Assembly

SEMICONDUCTOR

Mark	Part No.	Symbol & Description
★	GP-3S20	D081

Rotation Sensor Assembly

SEMICONDUCTOR

Mark	Part No.	Symbol & Description
★	GP-1S03	D082

Power Supply Assembly

SEMICONDUCTORS

Mark	Part No.	Symbol & Description
★★	BA6109	Q801, Q802
★★	2SC17040LN	Q803
★★	2SA933LN	Q804, Q805
★★	2SD1189	Q806
⚠ ★	1B2C1-LC2	D801, D803, D812
⚠ ★	1B2Z1-LC2	D802, D804, D813
★	1S2473	D805, D806
⚠ ★	1SR35-100A	D809, D811
⚠ ★	RD5 . 6EB2	D808
⚠ ★	RD5.1EB2 (RD5.1EB3)	D810
⚠ ★	RD27FB1	D814
⚠ ★	RD6.2FB2	D815

SWITCH

Mark	Part No.	Symbol & Description
⚠ ★★	RSA-063	S801 Push switch (POWER)

COIL

Mark	Part No.	Symbol & Description
	RTF-160	L801 Line coil

CAPACITORS

Mark	Part No.	Symbol & Description
	CEA 332M 25	C802, C803, C804
	CEA 471M 50	C816
	RCH-055 (RCH-056)	C808 Electrolytic (10000/25)
⚠	RCG-008	C801 Ceramic (0.01/AC250V)
	CEA 220M 25	C821
	CEA 330M 16	C815
	CEA 101M 10	C805, C806, C809
	CEA R22M 50	C814
	CEA 221M 35	C817
	CKDYF 103Z 50	C807, C810, C812, C819, C823
	CKDYF 473Z 50	C811
	CEA 101M 35	C818
	CEA 470M 25	C820
	CEANP 4R7M 35	C813

RESISTORS

Note: When ordering resistors, convert the resistance value into code form, and then rewrite the part no. as before.

Mark	Part No.	Symbol & Description
⚠	RS1LF □□□J	R801, R802, R807, R808, R811
	RD1/2PS 102J	R814
	RD1/4PM □□□J	Other resistors

10. SCHEMATIC DIAGRAM

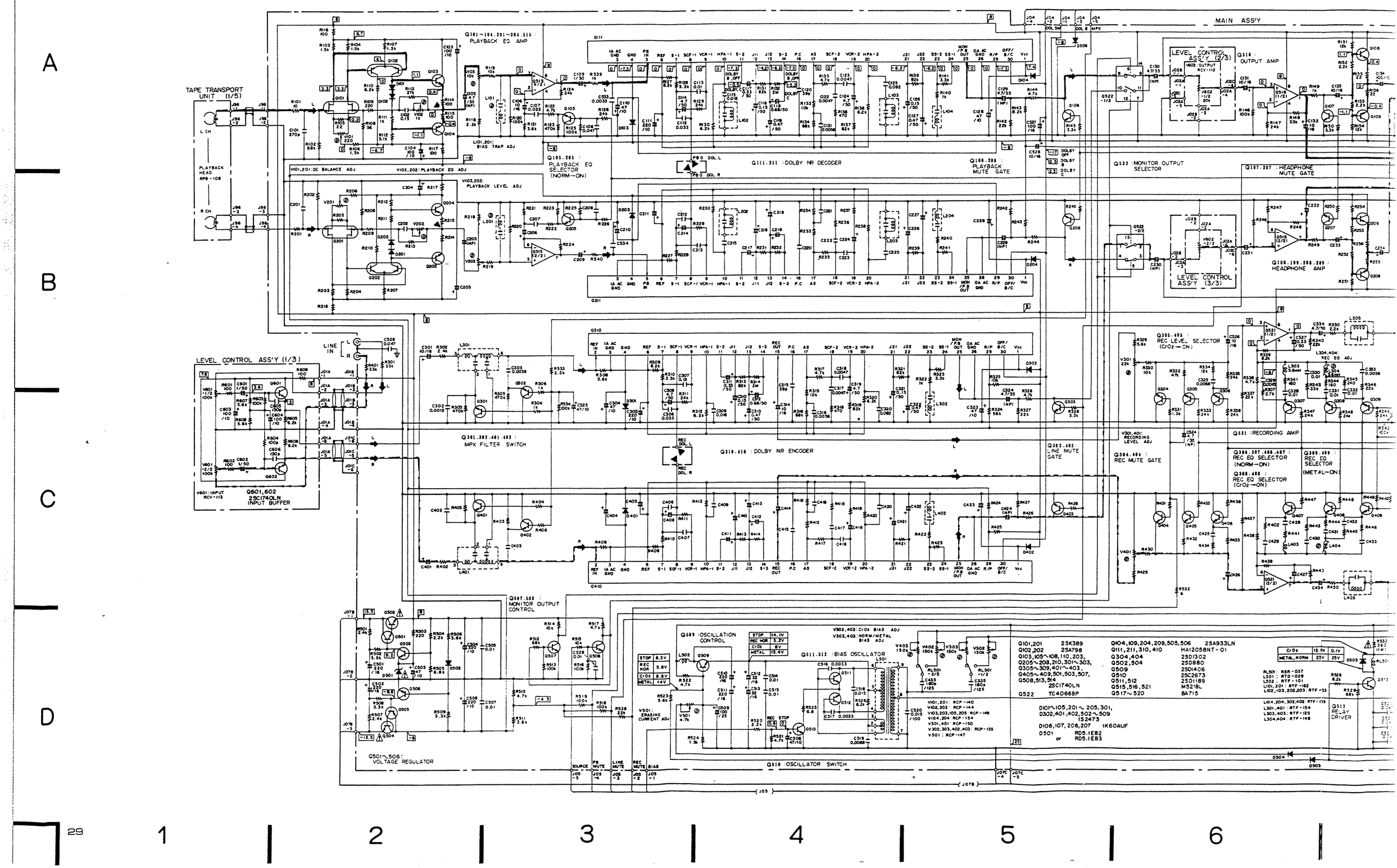

NOTE:
The indicated semiconductors are representative ones only. Other alternative semiconductors may be used and are listed in the parts list.

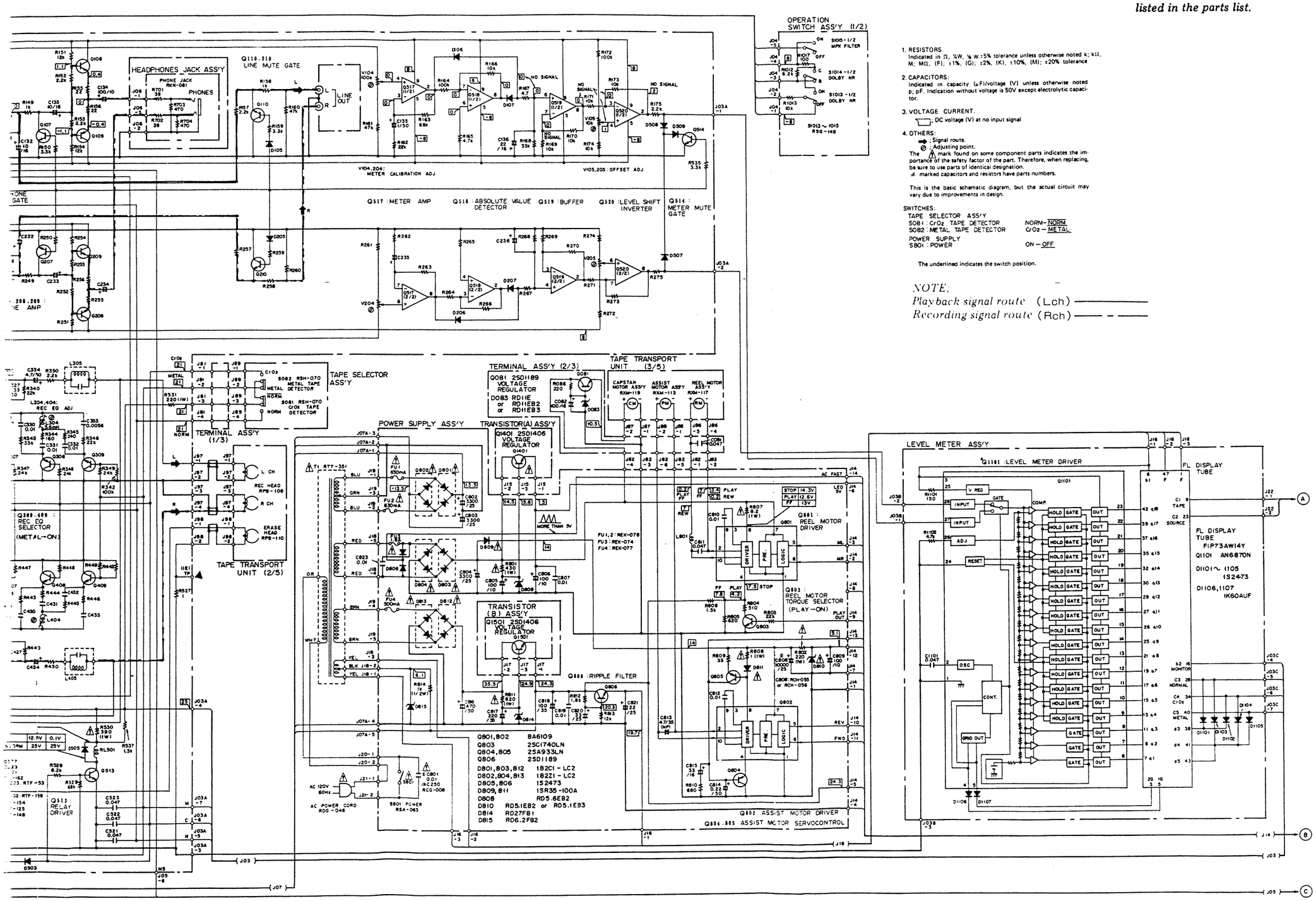

1. RESISTORS:
Indicated in Ω, ¼W, ⅛ W; ±5% tolerance unless otherwise noted k; kΩ, M; MΩ, (F); ±1%, (G); ±2%, (K), ±10%, (M); ±20% tolerance

2. CAPACITORS:
Indicated in capacity (μF)/voltage (V) unless otherwise noted p; pF. Indication without voltage is 50V except electrolytic capacitor.

3. VOLTAGE CURRENT.
: DC voltage (V) at no input signal

4. OTHERS:
➡ : Signal route.
⊘ : Adjusting point.
The ⚠ mark found on some component parts indicates the importance of the safety factor of the part. Therefore, when replacing, be sure to use parts of identical designation.
⁎ marked capacitors and resistors have parts numbers.

This is the basic schematic diagram, but the actual circuit may vary due to improvements in design.

SWITCHES:

TAPE SELECTOR ASS'Y	
S081 : CrO2 TAPE DETECTOR	NORM–NORM
S082 : METAL TAPE DETECTOR	CrO2–METAL
POWER SUPPLY	
S801 : POWER	ON–OFF

The underlined indicates the switch position.

NOTE:
Playback signal route (Lch) ————
Recording signal route (Rch) — — —

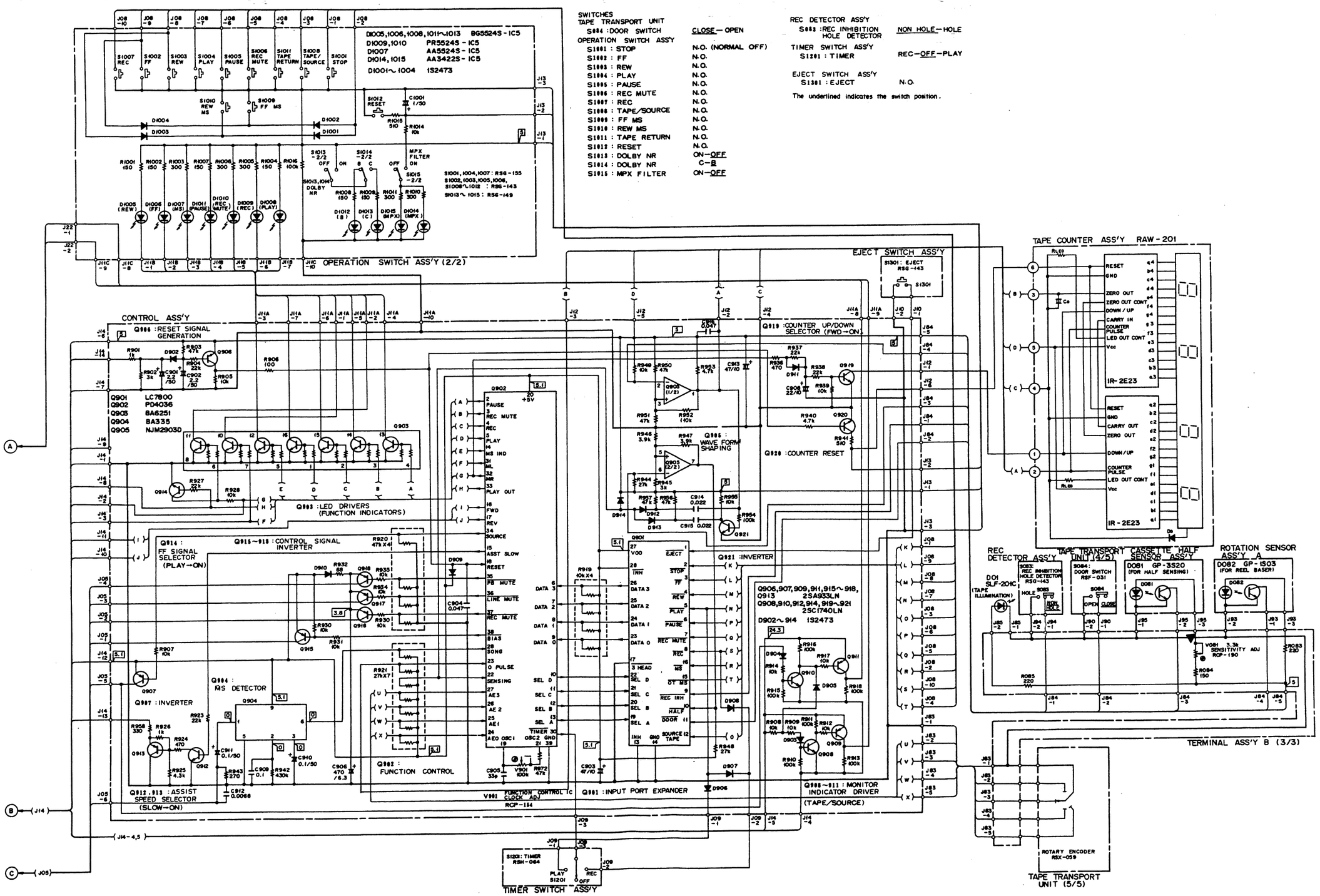

SWITCHES

TAPE TRANSPORT UNIT		
S804 :DOOR SWITCH	CLOSE—OPEN	
OPERATION SWITCH ASS'Y		
S1001 : STOP	N.O. (NORMAL OFF)	
S1002 : FF	N.O.	
S1003 : REW	N.O.	
S1004 : PLAY	N.O.	
S1005 : PAUSE	N.O.	
S1006 : REC MUTE	N.O.	
S1007 : REC	N.O.	
S1008 : TAPE/SOURCE	N.O.	
S1009 : FF MS	N.O.	
S1010 : REW MS	N.O.	
S1011 : TAPE RETURN	N.O.	
S1012 : RESET	N.O.	
S1013 : DOLBY NR	ON—OFF	
S1014 : DOLBY NR	C—B	
S1015 : MPX FILTER	ON—OFF	
REC DETECTOR ASS'Y		
S883 :REC INHIBITION HOLE DETECTOR	NON HOLE—HOLE	
TIMER SWITCH ASS'Y		
S1201 : TIMER	REC—OFF—PLAY	
EJECT SWITCH ASS'Y		
S1301 : EJECT	N.O.	

The underlined indicates the switch position.

11. ADJUSTMENTS

11.1 MECHANICAL ADJUSTMENTS

11.1.1 Tape Speed Adjustment

*Use a frequency counter

Mode	Adjustment location	Specifications
PLAY	Variable resistor in the capstan motor adjustment hole	Playback frequency should be within the 3005 ±10Hz range at the beginning of the STD-301 test tape.
PLAY	Check	Playback frequency should be within the 3000 ±30Hz range at the beginning of the STD-301 test tape.

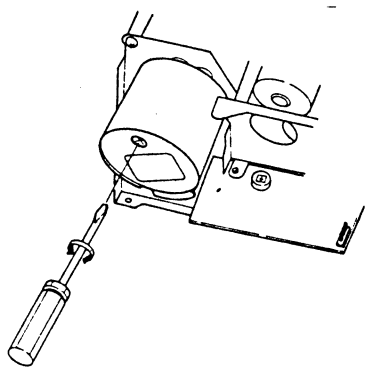

Fig. 11-1 Tape speed adjustment

11.1.2 Air Damper Adjustment

Adjustment location	Specifications
Cylinder adjustment screw	The door should open smoothly (with no jerking etc.), and should not "bounce" back when fully opened.

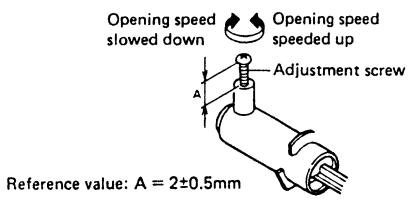

Fig. 11-2 Air damper adjustment

11.1.3 Door Position Adjustment

Check 1	When seen from the front, the ratios between dimensions A and B, and between dimentions C and D should be within the 0.5 to 2 range.
Check 2	When seen from the front, the difference between E and G should not exceed ±0.4mm, and E, F, and G should all exceed 0.5mm.
If the above specifications are not met, loosen the screws and readjust the door position.	

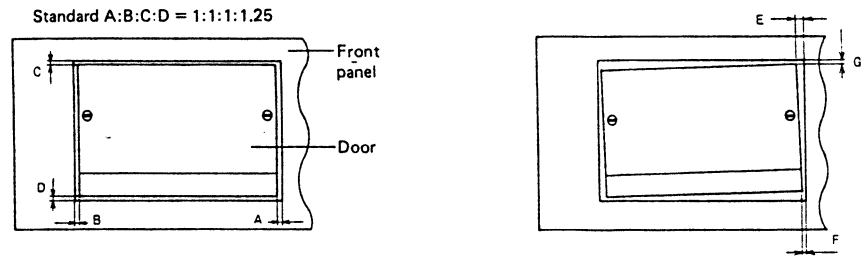

Fig. 11-3 Door position adjustment

11.2 ELECTRICAL ADJUSTMENTS

Adjustment Conditions

1. The mechanical adjustments must be completed first.
2. The heads must be cleaned and demagnetized.
3. Allow the deck to age for at least a few minutes before commencing any electrical adjustments.
4. The reference signal level is 0dBv = 1Vrms.
5. Connect a 50 kilo-ohm (or between 47 to 52 kilo-ohm) load resistance to the OUTPUT terminals.
6. Unless otherwise specified, leave the OUTPUT level control at the position of maximum level.
7. Likewise, the other switches listed below are to be left in the positions indicated unless otherwise specified.
   TIMER : OFF
   DOLBY NR : OFF
   MPX FILTER : OFF

Test Tapes

STD-331B* : Playback adjustments (See Fig. 11-4)
STD-608A : NORMAL blank tape
STD-603 : CrO_2 blank tape
STD-604 : METAL blank tape

* Whereas the reference recording level for STD-331A is 333Hz, 250nwb/m, the same level for STD-331B is 315Hz, 160nwb/m.

List of Adjustments

1. DC amplifier DC balance adjustment
2. Control IC clock adjustment
3. Cassette half detector sensitivity adjustment
4. Tape transport and head azimuth adjustment
5. Playback equalizer adjustment
6. Playback level adjustment
7. Level meter adjustment
8. METAL erasure current adjustment
9. Bias trap adjustment
10. Recording bias adjustment
11. Recording level adjustment
12. Recording and playback frequency response adjustment

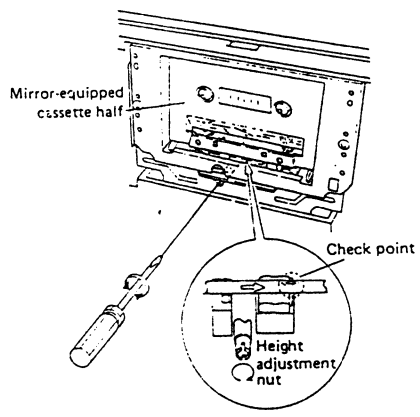

Fig. 11-5 Tape transport adjustment

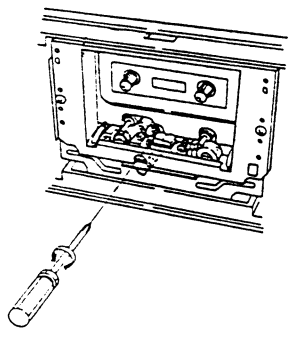

Fig. 11-6 Head azimuth adjustment

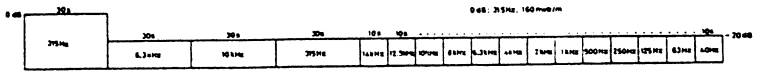

Fig. 11-4 STD-331B test tape

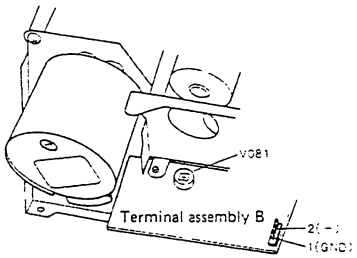

Fig. 11-7 Cassette half detector sensitivity adjustment

Test tape	STD-331B
DOLBY NR switch	OFF

* The right channel is compensated by −1dB from the actual measurements at 40Hz and 63Hz.

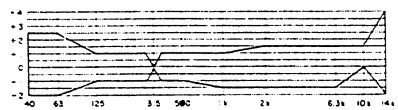

Fig. 11-8 Allowable playback frequency response zone

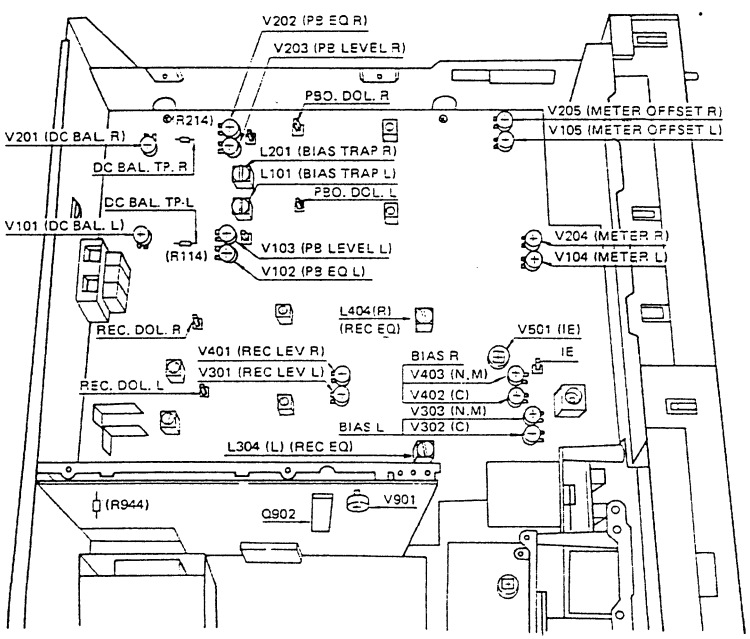

Fig. 11-9 Adjustment locations

1. DC Amplifier DC Balance Adjustment

	Mode	Input signal & test tape	Adjustment location	Measuring location	Adjustment value	Remarks
1	STOP	No input	V101 (left channel)	DC.BAL.TP-L	0±0.2V DC	Measure at the R114 lead facing the front panel
2			V201 (right channel)	DC.BAL.TP-R	0±0.2V DC	Measure at the R214 lead facing the front panel

2. Control IC Clock Adjustment

Mode	Input signal & test tape	Adjustment location	Measuring location	Adjustment value	Remarks
STOP	No input	V901 (Control assembly)	Pin 21 of Q902 (Control assembly)	200kHz±5kHz	Insert a capacitor of a few pF and measure by frequency counter.

3. Cassette Half Detector Sensitivity

- Measure with a DC voltmeter of high input impedance (of about 1 Mega-ohm).
- Connect 5.1 kilo-ohm in parallel with R944 in the control assembly for the adjustment, and remove it after the adjustment has been completed.

Mode	Input signal & test tape	Adjustment location	Measuring location	Adjustment value	Remarks
STOP	No input (cassette half not inserted)	V081 (see Fig. 11-7) (Terminal assembly B)	Between 2(+) and 1 (Terminal assebmly B)	2.5V±0.1V DC	Prevent strong illumination being beamed onto the photo-interrupter

4. Tape Transport and Head Azimuth Adjustment

	Mode	Input signal & test tape	Adjustment location	Measuring location	Adjustment value	Remarks
1	PLAY	Mirror-equipped cassette half	Height adjustment nut (see Fig. 11-5)	Tape guide (see Fig. 11-5)	No tape curling at the tape guide	Tape curling and floating up to 1/5 of the tape width is permissible
2	PLAY	Play the 10kHz/−20dB section of the STD-331B test tape	Head azimuth adjustment screw (see Fig. 11-6)	Left and right OUTPUT terminals	Zero phase difference between left and right channels at maximum playback signal level (playback level fluctuation 1.0dB max.)	
3	Check step 1, and readjust if necessary. Always perform step 2 after performing step 1.					

5. Playback Equalizer Adjustment

- Set V103 and V203 (playback level ADJ.) to maximum level, and V102 and V202 (playback EQ.ADJ.) to the mechanical center positions.

Mode	Input signal & test tape	Adjustment location	Measuring location	Adjustment value	Remarks
PLAY	Play the 315Hz/−20dB and 10kHz/−20dB sections of the STD-331B test tape	V102 (left channel) V202 (right channel)	Left and right OUTPUT terminals	Playback level at 10kHz to be +0.5 dB higher than the playback level at 315Hz	Check that the frequency response lies inside the allowable playback frequency response zone (see Fig. 11-8)

6. Playback Level Adjustment

- This adjustment must be performed accurately since it also sets the Dolby NR level.

Mode	Input signal & test tape	Adjustment location	Measuring location	Adjustment value	Remarks
PLAY	Play the 315Hz/0dB section of the STD-331B test tape	V103 (left channel) V203 (right channel)	PBO.DOL.L PBO.DOL.R	−7.7dBv (412.1mV)	Leave the DOLBY NR switch off.

7. Level Meter Adjustment

- Set V104, V105, V204, and V205 to maximum positions, and OUTPUT level control to maximum level.

	Mode	Input signal & test tape	Adjustment location	Measuring location	Adjustment value	Remarks
1	STOP	Apply a 315Hz/−10dBv (316mV) signal to the INPUT terminals	INPUT level control	REC.DOL.L REC.DOL.R	−7.7dBv (412.1mV)	
2		Set the input signal level to −35dBv (17.8mV)	Set the MONITOR switch to the SOURCE position			
3			V105 (left channel) V205 (right channel)	Turn slowly counter-clockwise and stop when the "−20dB" segments go out.		
4		Set the input signal level to −10dBv (316mV)	Set the MONITOR switch to the SOURCE position			
5			V104 (left channel) V204 (right channel)	After turning fully counter-clockwise, turn back clockwise until the "0dB" segments come on.		
6		Switch the input signal off when the "0dB" segments are on, and check that when the "−20dB" segment for one channel gose out the "discrepancy in the residual display" in the other channel is not more than two segments ("−20dB" or "−15dB").				
7		Vary the input signal level	Check	Meter display +10dB	Comes on at input level of 0±3dBv	
8			Check	Meter display −10dB	Comes on at input level of −20±3dBv	

8. METAL Erasure Current Adjustment

Mode	Input signal & test tape	Adjustment location	Measuring location	Adjustment value	Remarks
REC	No input, STD-604 test tape	V501	IE-GND	175mV AC	

9. Bias Trap Adjustment

Mode	Input signal & test tape	Adjustment location	Measuring location	Adjustment value	Remarks
REC	No input, STD-604 test tape	L101 (left channel) L201 (right channel)	PB.DOL.L PB.DOL.R	Minimum bias leak	Measure with AC voltmeter and oscilloscope

10. Recording Bias Adjustment

- Set the MONITOR switch to the SOURCE position, and adjust the OUTPUT level control to maximum level.

	Mode	Input signal & test tape	Adjustment location	Measuring location	Adjustment value	Remarks
1	REC-PAUSE	Apply a 6.3kHz/−20dBv (100mV) signal to the INPUT terminals	INPUT level control	Left and right OUTPUT terminals	−14dBv (199.5mV)	−10VU recording
2	REC	Record the above signal onto the STD-608A test tape, and monitor playback simultaneously	V303 (left channel) V403 (right channel)	Left and right OUTPUT terminals (and MONITOR in the TAPE position	After first turning V303 and V403 fully counter-clockwise, turn back clockwise and stop at a position where the level drops 3dB below the maximum playback level after passing through that maximum level position.	
3	REC	Record the above signal onto the STD-603 test tape, and monitor play-back simultaneously	V302 (left channel) V402 (right channel)		After first turning V302 and V402 fully counter-clockwise, turn back clockwise and stop at a position where the level drops 2.5dB below the maximum playback level after passing through that maximum level position.	

11. Recording Level Adjustment
- Leave the DOLBY NR switch off.

	Mode	Input signal & test tape	Adjustment location	Measuring location	Adjustment value	Remarks
1	REC-PAUSE	Apply a 315Hz/–10dBv (316mV) signal to the INPUT terminals	INPUT level control	REC.DOL.L REC.DOL.R	–7.7dBv (412.1mV)	
2	REC	Record the avove signal onto the STD-608A test tape, and monitor play-back simultaneously	V301 (left channel) V401 (right channel)	PBO.DOL.L PBO.DOL.R	–7.7dBv (412.1mV)	
3	REC	Record the above signal onto the STD-603 and STD-604 test tapes, and monitor playback simultaneously	Check	PBO.DOL.L PBO.DOL.R	–7.7±1.5dBv	

12. Recording and Playback Frequency Response Adjustment
- Levae the DOLBY NR switch off, and set the OUTPUT level control to maximum level.

	Mode	Input signal & test tape	Adjustment location	Measuring location	Adjustment value	Remarks
1	REC-PAUSE	Apply a 315Hz/–30dBv (31.6mV) signal to the INPUT terminals	INPUT level control	Left and right OUTPUT terminals	–24dBv (63.1mV)	
2	REC	Record the above signal level onto the STD-608A test tape at 315Hz and 10kHz, and monitor playback simultaneously	V303 (left channel) V403 (right channel)	Left and right OUTPUT terminals	Adjust the 10kHz playback level to 0dB higher than the 315Hz level (with MONITOR switch in TAPE position).	
3	Record and playback signals up to 15kHz onto the STD-608A test tape, and check that the allowable frequency response zone shown in Fig. 11-10 is satisfied (for DOLBY NR OFF, and B and C).					
4	REC	Likewise, record and playback the same signal onto the STD-604 test tape	L304 (left channel) L404 (right channel)	Left and right OUTPUT terminals	Adjust the 10kHz playback level to 0dB respect to the 315Hz level (with MONITOR switch in TAPE position).	
5	Record and playback signals up to 15kHz onto the STD-604 test tape, and check that the allowable frequency response zone shown in Fig. 11-12 is satisfied (for DOLBY NR OFF, and B and C).					
6	REC	Likewise, record and playback the same signal onto the STD-603 test tape	V302 (left channel) V402 (right channel)	Left and right OUTPUT terminals	Adjust the 10kHz playback level to 0dB in respect to the 315Hz level (with MONITOR switch in TAPE position).	
7	Record and playback signals up to 15kHz onto the STD-603 test tape, and check that the allowable frequency response zone shown in Fig. 11-11 is satisfied (for DOLBY NR OFF, and B and C).					

Test tape	STD-608A (NORM)
DOLBY NR switch	OFF

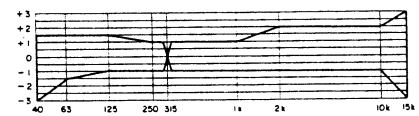

Test tape	STD-608A (NORM)
DOLBY NR switch	B type ON

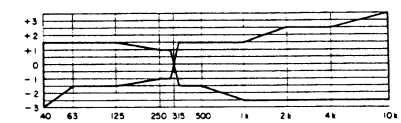

Test tape	STD-608A (NORM)
DOLBY NR switch	C type ON

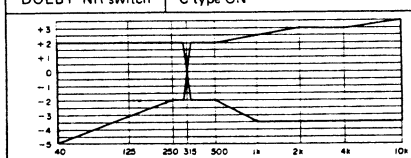

Fig. 11-10 Allowable recording and playback frequency response zone (NORM)

Test tape	STD-603 (CrO_2)
DOLBY NR switch	OFF

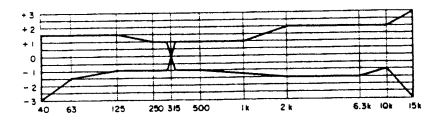

Test tape	STD-603 (CrO_2)
DOLBY NR switch	B type ON

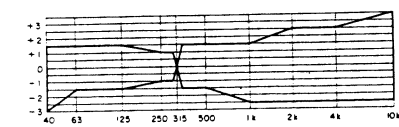

Test tape	STD-603 (CrO_2)
DOLBY NR switch	C type ON

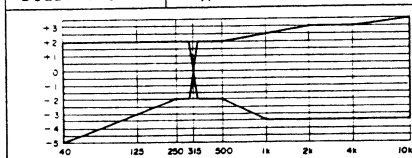

Fig. 11-11 Allowable recording and playback frequency response zone (CrO_2)

Test tape	STD-604
DOLBY NR switch	OFF

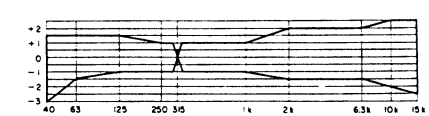

Test tape	STD-604
DOLBY NR switch	B type ON

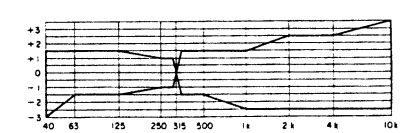

Test tape	STD-604
DOLBY NR switch	C type ON

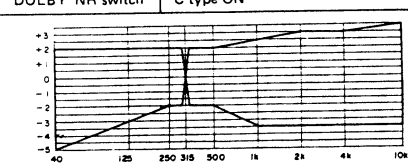

Fig. 11-12 Allowable recording and playback frequency response zone (METAL)

11. RÉGLAGE

11.1 REGLAGES MECANIQUES

11.1.1 Réglage de la vitesse de la bande

* Utiliser un fréquencemètre

Mode	Point du réglage	Spécifications
PLAY (reproduction)	Fhéostat dans l'orifice de réglage du moteur du cabestan	La fréquence de reproduction doit se situer dans une plage 3005 ± 10Hz au début de la bande d'essai STD-301.
PLAY	Vérification	La fréquence de reproduction doit se situer dans une plage 3000 ± 30Hz au début de la bande d'essai STD-301.

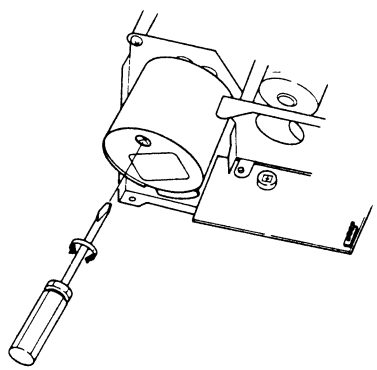

Fig. 11-1 Réglage de la vitesse de la bande

11.1.2 Réglage du clapet d'entrée d'air

Point du réglage	Spécifications
Vis de réglage du cylindre	La porte doit s'ouvrir en dôuceur (sans à-coups) et ne doit pas revenir d'un coup sec en arrière lorsqu'on l'ouvre à fond.

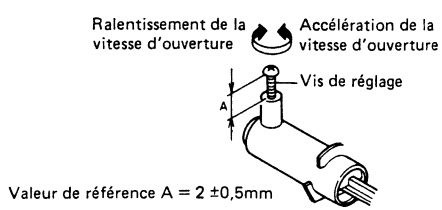

Fig. 11-2 Réglage du clapet d'entrée d'air

11.1.3 Réglage de la position de la porte

Point de réglage 1	Vu de face, les rapports entre les dimensions A et B, et entre les dimensions C et D doivent se situer entre 0,5 et 2.
Point de réglage 2	Vu de face, la différence entre E et G ne doit pas excéder ±0,4mm, et E, F, et G doivent toutes dépasser 0,5mm.
Si les spécifications ci-dessus ne sont respectées, desserre les vis et rerégler la position de la porte.	

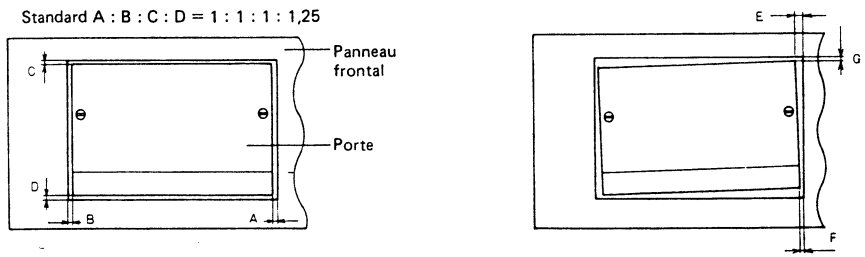

Fig. 11-3 Réglage de la position de la porte

11.2 REGLAGES ELECTRIQUES

Conditions de réglages

1. Les réglages mécaniques doit être d'abord terminés.
2. Les têtes doivent être nettoyées et démagnétisées.
3. Laisser chauffer la platine pendant quelques minutes au moins avant de commencer un quelconque réglage électrique.
4. Le niveau de référence du signal est 0dBv = 1V rms (efficace).
5. Brancher une résistance de charge de 50 kohm (ou entre 47 et 52 kohm) sur les bornes de sortie (OUTPUT).
6. Sauf spécification contraire, laisser le contrôle de niveau de sortie (OUTPUT) sur la position maximum.
7. De la même manière, les autres commutateurs cités cidessous doivent être laissés dans la position indiquée sauf spécification contraire.

TIMER (minuteur)	: OFF (arrêt)
DOLBY NR	: OFF (arrêt)
FILTRE MPX	: OFF (arrêt)

Bandes d'essai

STD-331B*	: Réglages de reproduction (se référer à la Fig. 11-4).
STD-608A	: Bande vierge NORMALE
STD-603	: Bande vierge à l'oxyde de chrome CrO_2
STD-604	: Bande vierge METAL

* Le niveau de référence d'enregistrement pour la STD-331A est 333Hz, 250nwb/m; pour la STD-331B, 315Hz, 160nwb/m.

Liste des réglages

1. Réglage de la balance DC de l'amplificateur DC.
2. Réglage de base du circuit intégré de commande.
3. Réglage de la sensibilité du détecteur de cassette.
4. Réglage de l'azimutage de la tête et du transport de la bande.
5. Réglage de l'égaliseur de reproduction.
6. Réglage du niveau de reproduction.
7. Réglage de l'indicateur de niveau.
8. Réglage du courant d'effacement METAL.
9. Réglage du circuit de polarisation.
10. Réglage de la polarisation d'enregistrement.
11. Réglage du niveau d'enregistrement.
12. Réglage de la réponse en fréquence et de reproduction.

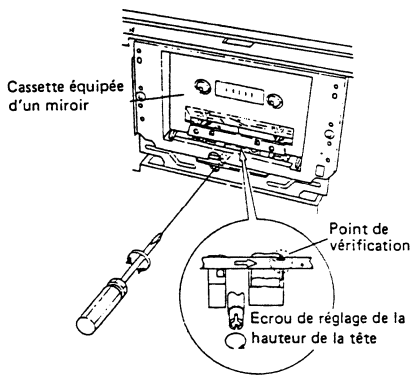

Fig. 11-5 Réglage du transport de la bande

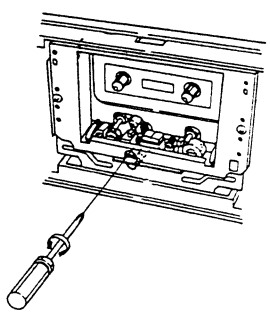

Fig. 11-6 Réglage de l'azimutage de la tête

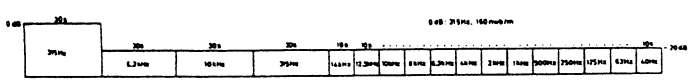

Fig. 11-4 Bande d'essai STD-331B

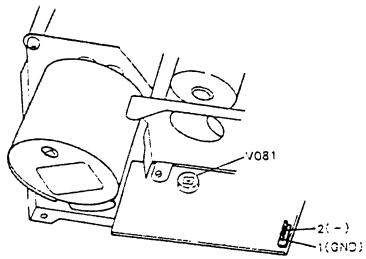

Fig. 11-7 Réglage de la sensibilité du détecteur de cassette

Bande d'essai	STD-331B
Réducteur de bruit DOLBY	OFF (désenclenché)

* Le canal droit est pondéré de −1dB par rapport aux mesures réelles à 40 et 63Hz.

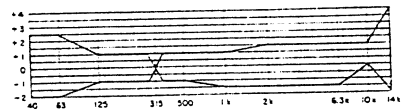

Fig. 11-8 Zone de réponse en fréquence de reproduction admissible

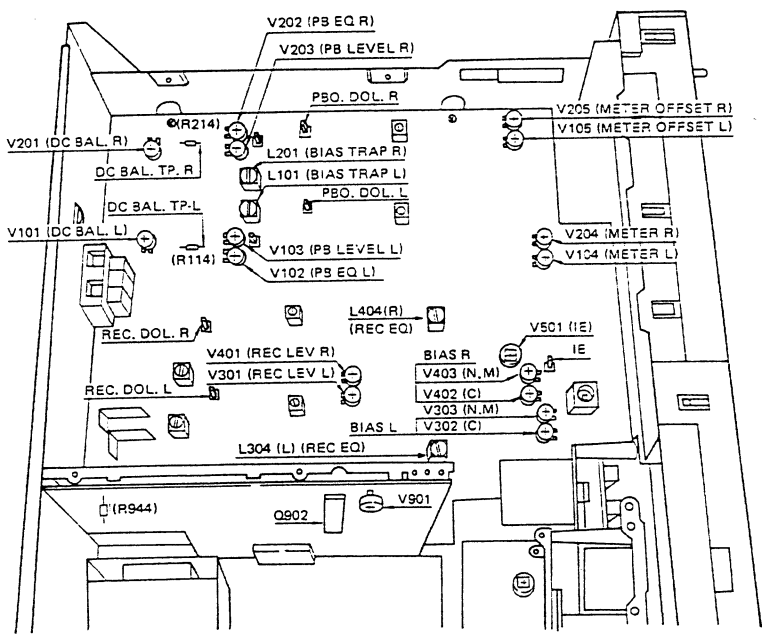

Fig. 11-9 Points de réglage

1. Réglage de la balance CC de l'amplificateur CC

	Mode	Signal d'entrée et bande d'essai	Point de réglage	Point de mesure	Valeur de réglage	Remarques
1	STOP	Pas d'entrée	V101 (canal gauche)	DC.BAL.TP-L	0 ± 0,2V DC	Faire une mesure au fil R114 en face du panneau avant
2			V201 (canal droit)	DC.BAL.TP-R	0 ± 0,2V DC	Faire une mesure au fil R124 en face du panneau avant

2. Réglage de base du circuit intégré de commande

Mode	Signal d'entrée et bande d'essai	Point de réglage	Point de mesure	Valeur de réglage	Remarques
STOP	Pas d'entrée	V901 (unité de commande)	Fiche 21 de Q902 (unité de commande)	200kHz ± 5kHz	Insérer un condensateur de quelques pF et faire une mesure à l'aide d'un fréquencemètre

3. Sensibilité du détecteur de cassette

- Faire une mesurer à l'aide d'un voltmètre CC à impédance d'entrée élevée (d'environ 1 mega-ohm).
- Brancher 5,1kohm en parallèle avec le R944 dans l'unité de commande pour le réglage, et l'enlever après la fin du réglage.

Mode	Signal d'entrée et bande d'essai	Point de réglage	Point de mesure	Valeur de réglage	Remarques
STOP	Pas d'entrée (cassette non insérée)	V081 (voir Fig. 11-7) (unité de sortie B)	Entre 2 (+) et 1 (masse) (unité de sortie B)	2,5V ± 0,1V CC	Eviter qu'un éclairage intense ne vienne frapper l'interrupteur photo-électrique.

4. Réglage du transport de la bande et de l'azimutage de la tête

	Mode	Signal d'entrée et bande d'essai	Point de réglage	Point de mesure	Valeur de réglage	Remarques
1	PLAY (reproduction)	Cassette équipée d'un miroir	Ecrou de réglage de hauteur (se référer à la Fig. 11-5)	Guide de la bande (se référer à la Fig. 11-5)	Pas d'ondulation de la bande au niveau du guide de la bande	Un mouvement et une ondulation égals à 1/5 de la largeur de la bande sont acceptables.
2	PLAY (reproduction)	Reproduire la partie 10kHz/−20dB de la bande d'essai STD-331B	Vis de réglage de l'azimutage de la tête (voir Fig. 11-6)	Bornes de sortie (OUTPUT) droit et gauche	Différence de phase nulle entre les canaux droit et gauche au niveau maximal de reproduction (fluctuation du niveau de reproduction, 1,0dB au maximum).	
3	Vérifier l'étape 1, et rerégler si nécessaire. Veiller à toujours effectuer l'étape 2 après l'étape 1.					

5. Réglage de l'égaliseur de reproduction

- Régler V103 et V203 (réglage du niveau de reproduction) au niveau maximal et les V102 et V202 sur la position mécanique médiane.

Mode	Signal d'entrée et bande d'essai	Point de réglage	Point de mesure	Valeur de réglage	Remarques
PLAY (reproduction)	Reproduire les parties 315Hz −20dB et 10Hz/ −20dB de la bande d'essai STD-331B	V102 (canal gauche) V202 (canal droit)	Bornes de sortie (OUTPUT) droit et gauche	Le niveau de reproduction à 10kHz doit être de +0,5dB supérieur au niveau de reproduction à 315Hz	Vérifier que la réponse en fréquence est située à l'intérieur de la zone de réponse en fréquence admissible (se référer à la Fig. 11-8)

6. Réglage du niveau de reproduction

- Ce réglage doit être effectué avec précision dans la mesure où il conditionne également le niveau de reproduction du réducteur de bruit DOLBY.

Mode	Signal d'entrée et bande d'essai	Point du réglage	Point de mesure	Valeur de réglage	Remarques
PLAY (reproduction)	Reproduire la partie 315Hz/0dB de la d'essai STD-331B	V103 (canal gauche) V203 (canal droit)	PBO.DOL-L PBO.DOL-R	−7,7dBv (412,1mV)	Laisser le commutateur du réducteur de bruit DOLBY désenclenché.

7. Réglage de l'indicateur de niveau

- Régler les V104, V105, V204 et V205 sur la position maximum et la commande du niveau de sortie également au maximum.

	Mode	Signal d'entrée et bande d'essai	Point de réglage	Point de mesure	Valeur de réglage	Remarques
1	STOP	Appliquer un signal de 315Hz/–10dBv (316mV) sur les bornes d'entrée	Commande de niveau d'entrée (INPUT)	REC.DOL-L REC.DOL-R	–7,7dBv (412,1mV)	
2		Régler le niveau du signal d'entrée sur –35dB (17,8mV)	Placer le commutateur MONITOR (contrôle d'enregistrement) su la position SOURCE			
3			V105 (canal gauche) V205 (canal droit)	Tourner lentement dans le sens des aiguilles d'une montre et s'arrêter lorsque les segments "–20dB" disparaissent.		
4		Régler le niveau du signal d'entrée sur –10dBv (316mV)	Placer le commutateur MONITOR (contrôle d'enregistrement) su la position SOURCE			
5			V104 (canal gauche) V204 (canal droit)	Tourner à fond dans le sens des aiguilles d'une montre, puis tourner dans le sens contraire des aiguilles d'une montre jusqu'à ce que les segments "0dB" apparaissent.		
6		Fermer le signal d'entrée lorsque les segments "0dB" apparaissent, et vérifier que le segment "–20dB" pour un canal disparaît et que "le différencie d'affichage résiduel" sur l'autre canal ne dépasse pas deux segments ("–20dBv" ou "–15dBv").				
7		Faire varier le niveau du signal d'entrée	Vérification	Affichage de l'indicateur +10dB	Activé pour un signal d'entrée de 0±3dBv	
8			Vérification	Affichage de l'indicateur –10dB	Activé pour un signal d'entrée de –20dBv±3dBv	

8. Réglage du courant d'effacement métal

	Mode	Signal d'entrée et bande d'essai	Point de réglage	Point de mesure	Valeur de réglage	Remarques
	REC (enregistrement)	Pas d'entrée, bande d'essai STD-604	V501	TP11-GND (masse)	175mV CA	

9. Réglage du circuit de polarisation

	Mode	Signal d'entrée et bande d'essai	Point de réglage	Point de mesure	Valeur de réglage	Remarques
	REC (enregistrement)	Pas d'entrée, bande d'essai STD-604	L 101 (canal gauche) L201 (canal droit)	PB.DOL-L PB.DOL-R	Dispersion minimale de polarisation	Faire les mesures à l'aide d'un voltmètre et d'un oscilloscope courant alternatif

10. Réglage de la polarisation d'enregistrement

- Placer le commutateur de contrôle d'enregistrement (MONITOR) sur la position SOURCE, et régler le niveau de sortie (OUTPUT) au maximum.

	Mode	Signal d'entrée et bande d'essai	Point de réglage	Point de mesure	Valeur de réglage	Remarques
1	REC-PAUSE	Appliquer un signal de 6,3kHz/–20dB (100mV) sur les bornes d'entrée (INPUT)	Commande de niveau d'entrée (INPUT)	Bornes de sortie (OUTPUT) droite et gauche	–14dBv (199,5mV)	Enregistrement à –10VU
2	REC	Enregistrer le signal ci-dessus sur la bande d'essai STD-608A et faire une vérification d'écoute immédiate	V303 (canal gauche) V403 (canal droit)	Les bornes de sortie (OUTPUT) droite et gauche (et MONITOR) sur la position TAPE)	Après avoir tourné V303 et V403 à fond dans le sens des aiguilles d'une montre, tourner inversement dans le sens contraire des aiguilles d'une montre, et s'arrêter sur la position où le niveau s'abaisse de 3dB au dessous du niveau maximal de reproduction après être passé par ce niveau maximal de reproduction.	
3	REC	Enregistrer le signal ci-dessus sur la bande d'essai STD-603 et faire une vérification d'écoute immédiate	V302 (canal gauche) V402 (canal droit)		Après avoir tourné V302 et V402 à fond dans le sens des aiguilles d'une montre, tourner inversement dans le sens contraire des aiguilles d'une montre, et s'arrêter sur la position où le niveau s'abaisse de 2,5dB au dessous du niveau maximal de reproduction après être passé par ce niveau maximal de reproduction.	

11. Réglage du niveau d'enregistrement

- Laisser le réducteur de bruit DOLBY désenclenché.

	Mode	Signal d'entrée et bande d'essai	Point de réglage	Point de mesure	Valeur de réglage	Remarques
1	REC-PAUSE	Appliquer un signal de 315Hz/–10dB (316mV) sur les bornes d'entrée (INPUT)	Commande de niveau d'entrée (INPUT)	REC.DOL-L REC.DOL-R	–7,7dBv (412,1mV)	
2	REC	Enregistrer le signal ci-dessus sur la band d'essai STD-608A et faire une vérification d'écoute immédiate	V301 (canal gauche) V401 (canal droit)	PBO.DOL-L PBO.DOL-R	–7,7dBv (412,1mV)	
3	REC	Enregistrer le signal ci-dessus sur ls bandes d'essai STD-603A et STD-604 et faire une vérification d'écoute immédiate	Vérification	PBO.DOL-L PBO.DOL-R	–7,7±1,5dBv	

12. Réglage de la réponse en fréquence d'enregistrement et de reproduction

- Laisser le réducteur de bruit DOLBY désenclenché, et régler le niveau de sortie (OUTPUT) au maximum.

	Mode	Signal d'entrée et bande d'essai	Point de réglage	Point de mesure	Valeur de réglage	Remarques
1	REC-PAUSE	Appliquer un signal de 315Hz/–30dB (31,6mV) aux bornes d'entrée (INPUT)	Commande de niveau MASTER REC	Bornes de sortie (OUTPUT) gauche et droite	–24dBv (63,1mV)	
2	REC	Enregistrer les signaux de 315Hz et 10kHz sur la bande d'essai STD-608A au niveau ci-dessus et faire un contrôle de reproduction simultané	V303 (canal gauche) V403 (canal droit)	Bornes de sortie (OUTPUT) droite et gauche	Régler le niveau de reproduction du 10kHz à 0dB plus élevé que le niveau du 315Hz	
3	Enregistrer et reproduire les signaux jusqu'à 15kHz sur la bande d'essai STD-608A, et vérifier que la zone admissible de réponse en fréquence indiquée sur la Fig. 11-10 est respectée (pour le DOLBY désenclenché, B et C).					
4	REC	De la même manière, enregistrer et reproduire le même signal sur la bande d'essai STD-604	L304 (canal gauche) L404 (canal droit)	Bornes de sortie (OUTPUT) droite et gauche	Régler le niveau de reproduction du 10kHz à 0±2dB plus élevé que leniveau du 315Hz	
5	Enregistrer et reproduire les signaux jusqu'à 15kHz sur la bonde d'essai STD-604, et vérifier que la zone admissible de réponse en fréquence indiquée sur la Fig. 11-12 est respectée (pour le DOLBY désenclenché, B et C).					
6	REC	De la même manière, enregistrer et reproduire le même signal sur la bande d'essai STD-603	L302 (canal gauche) L402 (canal droit)	Bornes de sortie (OUTPUT) droit et gauche	Régler le niveau de reproduction du 10kHz à 0dB en fonction du niveau du 315Hz (le commutateur MONITOR étant sur la position TAPE)	
7	Enregistrer et reproduire les signaux jusqu'à 15kHz sur la bande d'essai STD-603, et vérifier que la zone admissible de réponse en fréquence indiquée sur la Fig. 11-11 est respectée (pour le DOLBY désenclenché, B et C).					

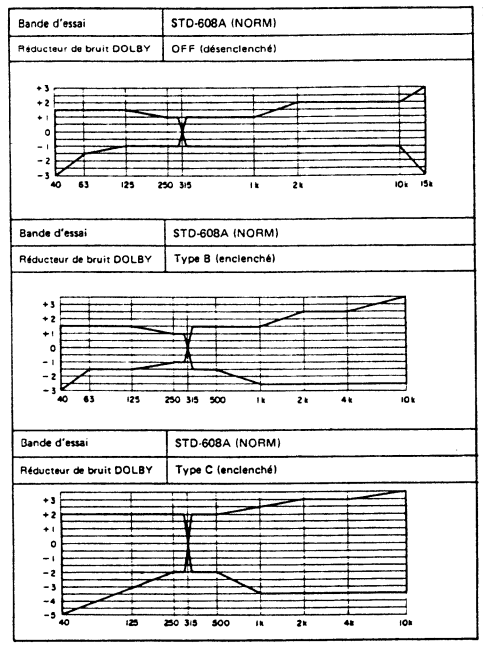

Fig. 11-10 Zone admissible de réponse en fréquence d'enregistrement/reproduction (NORM)

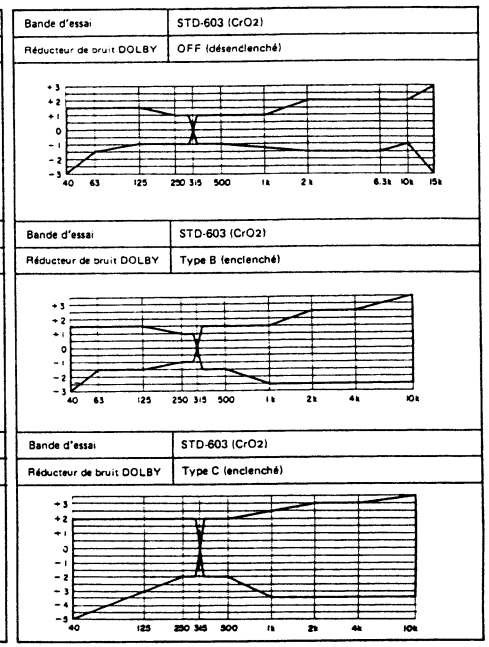

Fig. 11-11 Zone admissible de réponse en fréquence d'enregistrement/reproduction (CrO2)

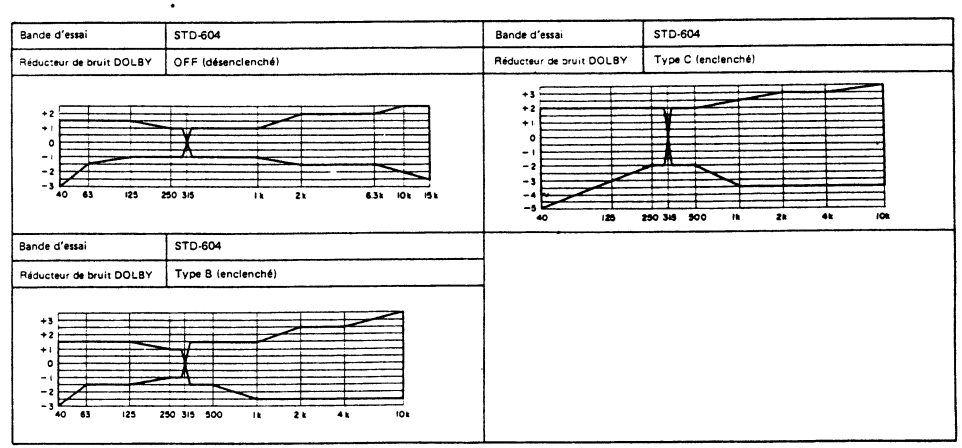

Fig. 11-12 Zone admissible de réponse en fréquence d'enregistrement/reproduction (METAL)

11. AJUSTE

11.1 AJUSTES MECANICOS

11.1.1 Ajuste de la velocidad de la cinta

* Emplear un frecuencímetro

Modo	Lugar de ajuste	Especificaciones
PLAY (Repro-ducción)	Resistor variable del orificio de ajuste del motor del eje de arrastre	La frecuencia de reproducción debe estar dentro del margen de 3005 ± 10Hz al principio de la cinta de prueba STD-301.
PLAY (Repro-ducción)	Comprobar	La frecuencia de reproducción debe estar dentro del margen de 3000 ± 30Hz al principio de la cinta de prueba STD-301.

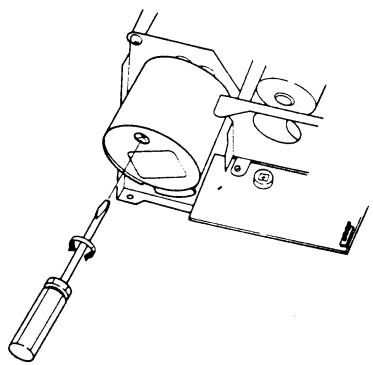

Fig. 11-1 Ajuste de la velocidad de la cinta

11.1.2 Ajuste del amortiguador neumático

Lugar de ajuste	Especificaciones
Tornillo de ajuste del cilindro	La puerta deberá abrirse suavemente (sin chirridos, etc.), y no deberá "rebotar" cuando queda completamente abierta.

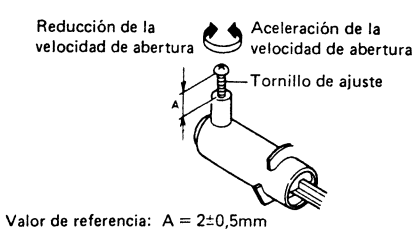

Fig. 11-12 Ajuste del amortiguador neumático

11.1.3 Ajuste de la posición de la puerta

Comprobación 1	Mirando desde delante, las relaciones entre las dimensiones A y B, y entre las dimensiones C y D deben estar dentro del margen de 0,5 a 2.
Comprobación 2	Mirando desde delante, la diferencia entre E y G no debe exceder de ±0,4mm, y E, F y G deben exceden todos de 0,5mm.
Si no se satisfacen las especificaciones de arriba, aflojar los tornillos y reajustar la posición de la puerta.	

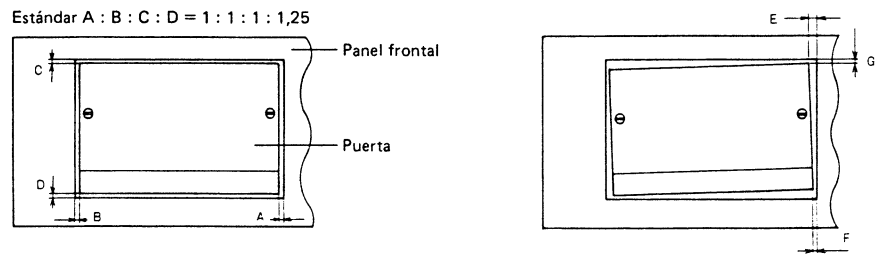

Fig. 11-3 Ajuste de la posición de la puerta

11.2 AJUSTES ELECTRICOS

Condiciones para el ajuste

1. Los ajustes mecánicos deben haberse completado en primer lugar.
2. Las cabezas deben limpiarse y desmagnetizarse.
3. Dejar precalentarse el magnetófono durante algunos minutos antes de iniciar los ajustes eléctricos.
4. El nivel de la señal de referencia es de 0dBv 1Vrms.
5. Conectar una resistencia de carga de 50K ohmios (o entre 47 a 52K ohmios) a los terminales OUTPUT.
6. A menos que se especifique lo contrario, dejar el control del nivel de OUTPUT en la posición de nivel máximo.
7. Del mismo modo, los demás mandos enumerados a continuación deberán dejarse en las posiciones indicadas a menos que se especifique lo contrario.

TIMER	: OFF
DOLBY NR	: OFF
MPX FILTER	: OFF

Cintas de prueba

STD-331B*	: Ajustes de reproducción (ver la Fig. 11-4)
STD-608A	: Cinta en blanco NORMAL
STD-603	: Cinta en blanco de CrO_2
STD-604	: Cinta en blanco de METAL

* Mientras que el nivel de grabación de referencia para la STD-331A es de 333Hz, 250nwb/m, el mismo nivel para STD-331B es de 315Hz, 160nwb/m.

Lista de ajustes

1. Ajuste del balance de CC del amplificador de CC
2. Ajuste del reloj del IC de control
3. Ajuste de la sensibilidad del detector de casete
4. Ajuste del transporte de la cinta y del acimut de la cabeza
5. Ajuste del ecualizador de reproducción
6. Ajuste del nivel de reproducción
7. Ajuste del medidor de nivel
8. Ajuste de la corriente de borrado de METAL
9. Ajuste de la trampa de polarización
10. Ajuste de la polarización de grabación
11. Ajuste del nivel de grabación
12. Ajuste de la respuesta en frecuencia de grabación y reproducción

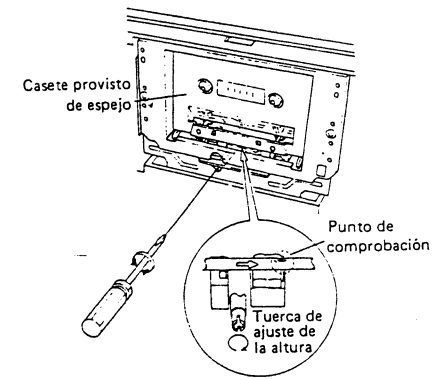

Fig. 11-5 Ajuste del transporte de la cinta

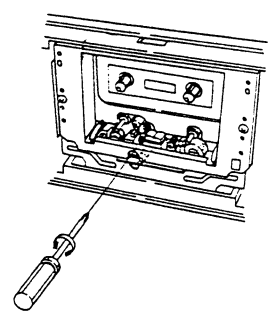

Fig. 11-6 Ajuste del acimut de la cabeza

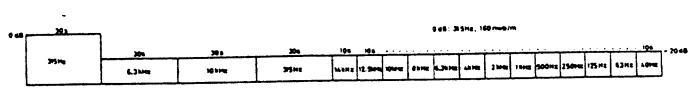

Fig. 11-4 Cinta de prueba STD-331B

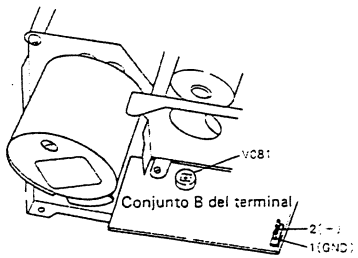

Fig. 11-7 Ajuste de la sensibilidad del detector de casete

Cinta de prueba	STD-331B
Interruptor DOLBY	OFF

* El canal derecho se compensa en −1dB desde las mediciones actuales a 40Hz y 63Hz.

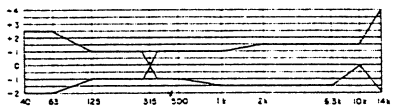

Fig. 11-8 Zona permisible de la respuesta en frecuencia de reproducción

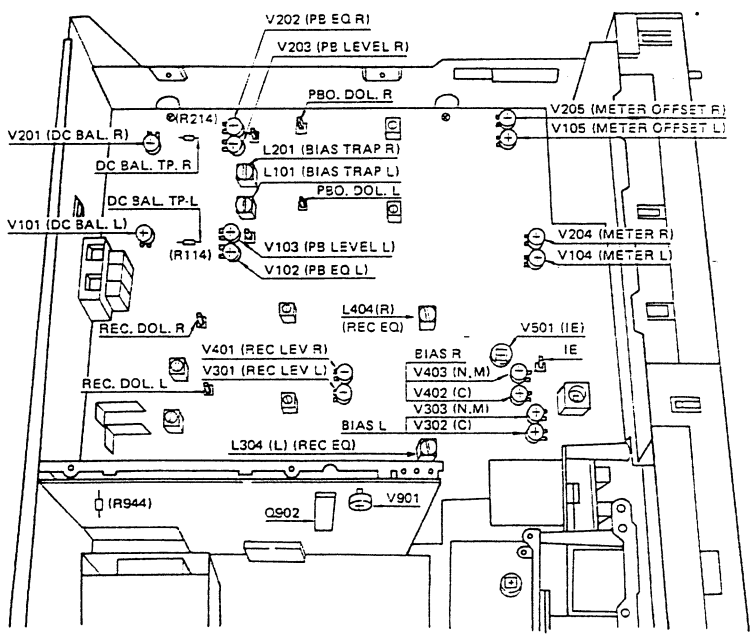

Fig. 11-9 Lugares de ajuste

1. Ajuste del balance de CC del amplificador de CC

	Modo	Señal de entrada y cinta de prueba	Lugar de ajuste	Lugar de medición	Valor de ajuste	Observaciones
1	STOP (Parada)	Sin entrada	V101 (canal izquiedo)	DC.BAL.TP-L	0±0,2V CC	Medir en el conductor de R114 encarado hacia el panel frontal)
2			V201 (canal derecho)	DC.BAL.TP-R	0±0,2V CC	Medir en el conductor de R214 encarado hacia el panel frontal)

2. Ajuste del reloj del IC de control

	Mode	Señal de entrada y cinta de prueba	Lugar de ajuste	Lugar de medición	Valor de ajuste	Observaciones
	STOP (Parada)	Sin entrada	V901 (Conjunto de control)	Pin 21 of Q902 (Conjunto de control)	200kH±5kHz	Insertar un condensador de pocos pF y medir con el frecuencímetro.

3. Sensibilidad del detector de casete
-
-

	Modo	Señal de entrada y cinta de prueba	Lugar de ajuste	Lugar de mediciòn	Valor de ajuste	Observaciones
	STOP (Parada)	Sin entrada (sin casete insertado)	V081 (ver la Fig. 11-7) (Conjunbo B de terminales)	Entre 2(+) y 1 (conjunto B de terminales)	2,5±V0,1V CC	Evitar iluminación intensa en el fotointerruptor

4. Ajuste del transporte de la cinta y del acimut de la cabeza

	Modo	Señal de entrada y cinta de prueba	Lugar de ajuste	Lugar de medición	Valor de ajuste	Observaciones
1	STOP (Reproducción)	Casete provisto de espejo	Tuerca de ajuste de la altura (ver la Fig. 11-5)	Guía de cinta (ver la Fig. 11-5)	Sin bucle de cinta en la guia de cinta	Bucle de cinta y flotación hasta de 1/5 de la anchura de la cinta permisible
2	PLAY (Reproducción)	Reproducir la sección de 10kHz/−20dB de la cinta de prueba STD-331B)	Tornillo de ajuste del acimut de la cabeza (ver la Fig. 11-6)	Terminales OUTPUT izquierdo y derecho	Diferencia de fase cero entre los canales izquierdo y derecho al nivel de señal de reproducción máximo (fluctuación del nivel de reproducción de 1,0dB máx.)	
3	Verificar el paso 1, y reajustar si resulta necesario. Efectuar siempre el paso 2 después de haber realizado el paso 1.					

5. Ajuste del ecualizador de reproducción
- Ajustar V103 y V203 (AJUS. del nivel de reproducción) al nivel máximo, y V102 y V202 (AJUS. ECUAL. de reproducciòn) a las posiciones de centro mecánico.

	Modo	Señal de entrada y cinta de prueba	Lugar de ajuste	Lugar de medición	Valor de ajuste	Observaciones
	PLAY (Reproducción)	Reproducir las secciones de 315Hz/−20dB y de de 10kHz/−20dB de la cinta de prueba STD-3318	V102 (canal izquierdo) V202 (canal derecho)	Terminales (OUTPUT) izquierdo y derecho	Nivel de reproducción a 10kHz a ser +0,5dB mayor que el nivel de reproducción d 315Hz	Comprobar que la respuesta en frecuencia caiga dentro del margen permisible de respuesta en frecuencia de reproducción (ver la Fig. 11-8)

6. Ajuste del nivel de reproducción
-

	Modo	Señal de entrada y cinta de prueba	Lugar de ajuste	Lugar de medición	Valor de ajuste	Observacions
	PLAY (Reproduction)	Reproducir la sección de 315Hz/0dB de la cinta de prueba STD-331B	V103 (canal izquierdo) V203 (canal derecho)	PBO.DOL-L PBO.DOL-R	−7,7dBv (412,1mV)	Dejar el interruptor DOLBY NR en la posición OFF

7. Ajuste del medidor de nivel

- Ajustar V104, V105, V204 y V205 a las posiciones máximas, y el control del nivel de OUTPUT al nivel máximo.

	Modo	Señal de entrada y cinta de prueba	Lugar de ajuste	Lugar de medición	Valor de ajuste	Observaciones
1	STOP (Parada)	Aplicar una señal de 315Hz/–10dBv (316mV) a los terminales INPUT	Control del nivel INPUT	REC.DOL.-L REC.DOL-R	–7,7dBv (412,1mV)	
2		Ajustar el nivel de la señal de entrada a –35dBv (17,8mV)	Poner el interruptor MONITOR en la posición SOURCE			
3			V105 (canal izquierdo) V205 (canal derecho)	Girar lentamente hacia la izquierda y parar cuando se apaguen los segmentos de "–20dB".		
4		Ajustar el nivel de la señal de entrada a –10dBv (316mV)	Poner el interruptor MONITOR en la posición SOURCE.			
			V104 (canal izqcierdo) V204 (canal derecho)	Después de girar completamente hacia la izquierda, volver a girar hacia la derecha hasta que se enciendan los segmentos de "0dB".		
6		Desactivar la señal de entrada cuando se enciendan los segmentos de "0dB", y comprobar que cuando se apagan los segmentos de "–20dB" para un canal, la 'discrepancia en la indicación residual' del otro canal no es de más de dos segmentos ("–20dB" o "–15dB").				
7		Variar el nivel de la señal de entrada	Comprobar	Indicación del medidor de +10dB	Se ilumina en nivel de entrada de 0±3dBv	
8			Comprobar	Indicación del medidor de –10dB	Se ilumina en el nivel de entrada de –20±3dBv	

8. Ajuste de la corriente de borrado de METAL

Modo	Señal de entrada y cinta de prueba	Lugar de ajuste	Lugar de medición	Valor de ajuste	Observaciones
REC (Grab.)	Sin entrada, cinta de prueba STD-604	V501	IE-GND	175mV AC	

9. Ajuste de la trampa de polarización

Modo	Señal de entrada y cinta de prueba	Lugar de ajuste	Lugar de medición	Valor de ajuste	Observaciones
REC (Grab.)	Sin entrada, cinta de prueba STD-604	L101 (canal izquierdo) L201 (canal derecho)	PB.DOL-L PB.DOL-R	Fuga de polarización mínima	Medir con un voltímetro de CA y un osciloscopio

10. Ajuste de la polarización de grabación

- Poner el interruptor MONITOR en la posición SOURCE y ajustar el control de nivel OUTPUT al nivel máximo.

	Modo	Señal de entrada y cinta de prueba	Lugar de ajuste	Lugar medición	Valor de ajuste	Observaciones
1	REC-PAUSE (Grab.-Pausa	Aplicar una señal de 6,3kHz/–20dBv (100mV) a los terminales INPUT	Control del nivel INPUT	Terminales izquierdo y derecho OUTPUT	–14dBv (199,5mV)	Grabación a –10VU
2	REC (Grab.)	Grabar la señal de arriba en la cinta de prueba STD-608A y monitorizar simultáneamente la reproducción	V303 (canal izquierdo) V403 (canal derecho)	Terminales OUTPUT izquierdo y derecho (a interruptor MONITOR en la posición TAPE)	Después de haber girado en primer lugar V303 y V403 completamente hacia la izquierda, girar de nuevo hacia la derecha y parar en la posición en la que el nivel caiga 3dB por debajo del nivel de reproducción máximo después de pasar por esta posición de nivel máximo.	
3	REC (Grab.)	Grabar la señal de arriba en la cinta de prueba STD-603 y monitorizar simultáneamente la reproducción.	V302 (canal izquierdo) V402 (canal derecho)		Después de haber girado en primer lugar V302 y V402 completamente hacia la izquierda, girar de nuevo hacia la derecha y parar en la posición en la que el nivel caiga 2,5dB por debajo del nivel de reproducción máximo después de pasar por esta posición de nivel máximo.	

11. Ajuste del nivel de grabación

- Dejar el interruptor DOLBY NR en la posición OFF.

	Modo	Señal de entrada y cinta de prueba	Lugar de ajuste	Lugar de medición	Valor de ajuste	Observaciones
1	REC-PAUSE (Grab-pausa)	Aplicar una señal de 315Hz/–10dBv (316mV) a los terminales INPUT	Control del nivel INPUT	REC.DOL-L REC.DOL-R	–7,7dBv (412,1mV)	
2	REC (Grab.)	Grabar la señal de arriba en la cinta de prueba STD-608A y monitorizar simultáneamente la reproducción	V301 (canal izquierdo) V401 (canal derecho)	PBO.DOL-L PBO.DOL-R	–7,7dBv (412,1mV)	
3	REC (Grab.)	Grabar la señal de arriba en las cintas de prueba STD-603 y STD-604 y monitorizar simultáneamente la reproducción	Comprobar	PBO.DOL-L PBO.DOL-R	–7,7±1,5dBv	

12. Ajuste de la respuesta en frecuencia de grabación y reproducción

- Dejar el interruptor DOLBY NR en la posición OFF, y ajustar el control del nivel OUTPUT al nivel máximo.

	Modo	Señal de entrada y cinta de prueba	Lugar de ajuste	Lugar de medición	Valor de ajuste	Observaciones
1	REC-PAUSE (Grab-pausa)	Aplicar una señal de 315Hz/–30dBv (31,6mV) a los terminales INPUT	Control del nivel INPUT	Terminales INPUT izquierdo y derecho	–24dBv (63,1mV)	
2	REC (Grab.)	Grabar la señal de arriba en la cinta de prueba STD-608A a 315Hz y 10kHz, y monitorizar simultáneamente la reproducción	V303 (canal izquierdo) V403 (canal derecho)	Terminales OUTPUT izquierdo y derecho	Ajustar el nivel de reproducción de 10kHz a 0dB más alto que el nivel de 315Hz (con el interruptor MONITOR en la posición TAPE)	
3	Grabar y reproducir señales hasta 15kHz en la cinta de prueba STD-608A y volver a comprobar que se satisfaga la zona permisible de respuesta en frecuencia mostrada en la Fig. 11-10 (para DOLBY NR OFF, y B y C).					
4	REC (Grab.)	Del mismo modeo, grabar y reproducir la misma señal en la cinta de prueba STD-604	L304 (canal izquierdo) L404 (canal derecho)	Terminales OUTPUT izquierdo y derecho	Ajustar el nivel de reproducción de 10kHz a 0±2dB con respecto al nivel de 315Hz (con el interruptor MONITOR en la posición TAPE)	
5	Grabar y reproducir señales hasta de 15kHz en la cinta de prueba STD-604, y comprobar que la zona permisible de respuesta en frecuencia mostrada en la Fig. 11-12 se satisfaga (para DOLBY NR OFF, y B y C).					
6	REC (Grab.)	Del mismo modeo, grabar y reproducir la misma señal en la cinta de prueba STD-603	V302 (canal izquierdo) V402 (canal derecho)	Terminales OUTPUT izquierdo y derecho	Ajustar el nivel de reproducción de 10kHz a 0dB con respecto al nivel de 315kHz (con el interruptor MONITOR en la posición TAPE).	
7	Grabar y reproducir señales hasta de 15kHz en la cinta de prueba STD-603, comprobar que se satisfaga la zona permisible de respuesta en frecuencia mostrada en la Fig. 11-11 (para DOLBY NR OFF, y B y C).					

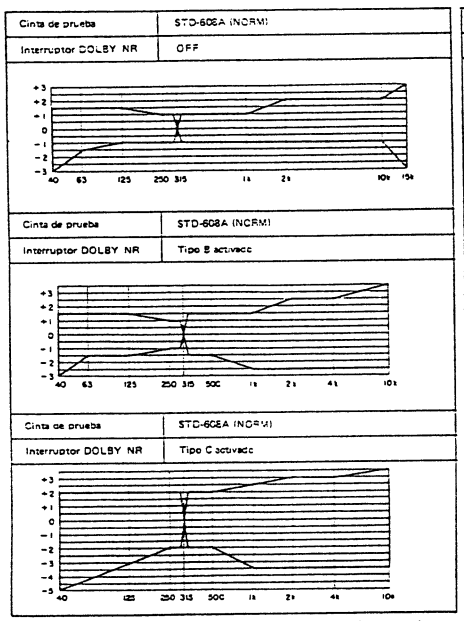

Fig. 11-10 Zona permisible de respuesta en frecuencia de grabación y reproducción (NORM)

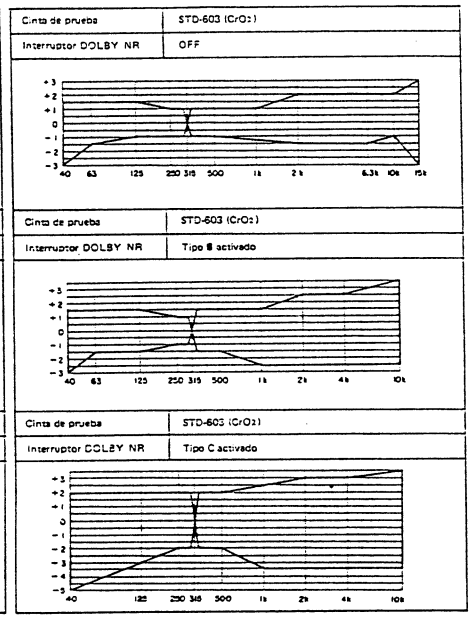

Fig. 11-11 Zona permisible de respuesta en frecuencia de grabación y reproducción (CrO_2)

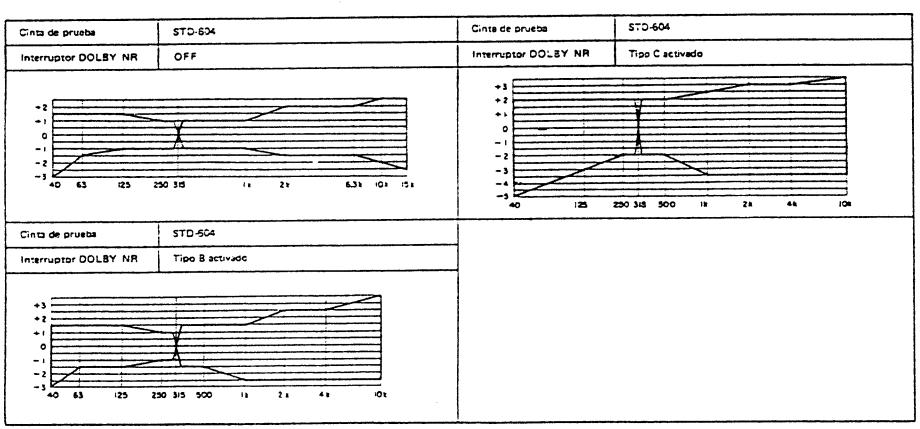

Fig. 11-12 Zona permisible de respuesta en frecuencia de grabación y reproducción (METAL)

12. SUPPLEMENT FOR KC, D, HEM, HB AND HP TYPES

Models CT-A7/KC (Canada model), HEM (European continent model), HB (United Kongdom model), HP (Australia model), and D (General export model) are the same as the CT-A7/KU (U.S.A. model) with the exception of this supplement.

NOTES:

- *When ordering resistors, first convert resistance values into code form as shown in the following examples.*

  Ex. 1 When there are 2 effective digits (any digit apart from 0), such as 560 ohm and 47k ohm (tolerance is shown by J = 5%, and K = 10%).

  560Ω 56 x 10¹ 561 ..... RD¼PS 5 6 1 J
  47kΩ 47 x 10³ 473 ..... RD¼PS 4 7 3 J
  0.5Ω 0R5 ..... RN2H 0 R 5 K
  1Ω 010 ..... RS1P 0 1 0 K

  Ex. 2 When there are 3 effective digits (such as in high precision metal film resistors).

  5.62kΩ 562 x 10¹ 5621..... RN¼SR 5 6 2 1 F

- *The ⚠ mark found on some component parts indicates the importance of the safety factor of the part. Therefore, when replacing, be sure to use parts of identical designation.*
- *For your Parts Stock Control, the fast moving items are indicated with the marks ★★ and ★.*

  ★★ GENERALLY MOVES FASTER THAN ★.
  This classification shall be adjusted by each distributor because it depends on model number, temperature, humidity, etc.

Contrast of Miscellaneous Parts

Mark	Symbol & Description	Part No.					
		KU type	KC type	HEM type	HB type	HP type	D type
⚠★★	FU1, FU2 Fuse (630mA)	REK-078	REK-078	.....	.....	.....	.....
	Fuse (T315mA)	.....	.....	REK-052	REK-052	REK-052	.....
⚠★★	FU3 Fuse (1.6A)	REK-074	REK-074	.....	.....	.....	.....
	Fuse (T500mA)	.....	.....	REK-049	REK-049	REK-049	.....
⚠★★	FU4 Fuse (500mA)	REK-077	REK-077	.....	.....	.....	.....
	Fuse (T1.25A)	.....	.....	REK-070	REK-070	REK-070	.....
⚠★★	S1 Line voltage selector	.....	.....	.....	.....	.....	RSX-057
⚠ ★	T1 Power transformer (120V)	RTT-351	RTT-353	.....	.....	.....	.....
	(220V/240V)	.....	.....	RTT-355	RTT-355	RTT-355	.....
	(120V/220V/240V)	.....	.....	.....	.....	.....	RTT-357
⚠	AC power cord	RDG-048	RDG-048	RDG-027	RDG-032	RDG-029	RDG-050
⚠	Strain relief (for AC power cord)	REC-395	REC-395	REC-396	REC-396	REC-396	REC-395
	Power supply assembly	Non supply	Same as KU	Non supply	Same as HEM	Same as HEM	Non supply
	Operating instructions (English)	RRB-224	RRB-224	.....	RRB-224	RRB-224	RRB-224
	(English/German/French/Italian)	.....	.....	RRE-054	.....	.....	.....

Power Supply Assembly for D Type

Power supply assembly for D type is the same as the KU type with the exception of the fuse holders for FU1 – FU4.

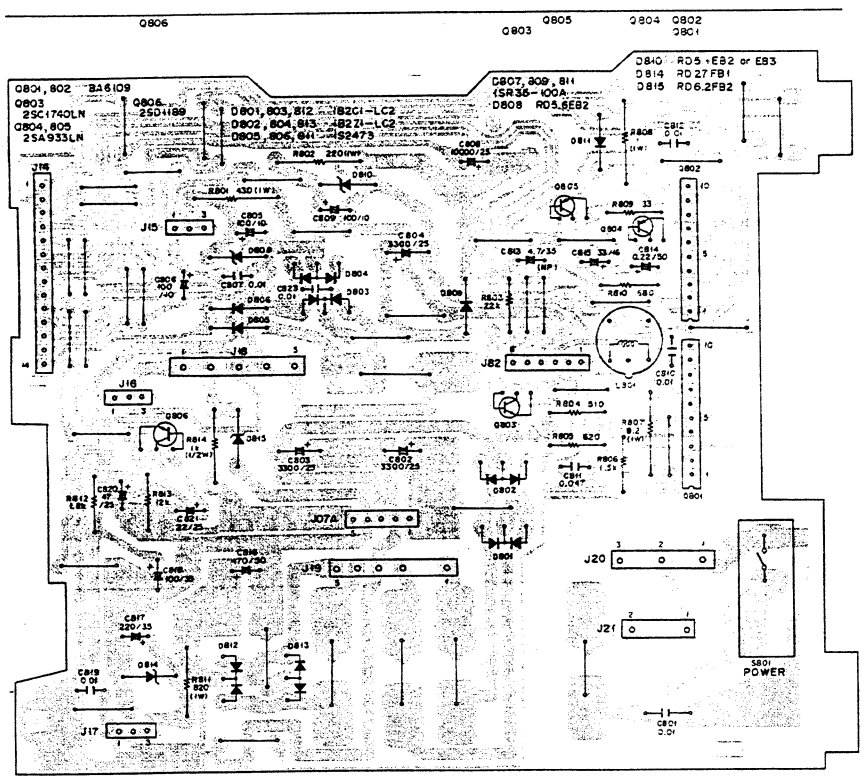

Power Supply Assembly for HEM, HB and HP Types

Power supply assembly for HEM, HB and HP types is the same as the KU type with the exception of the following parts and the fuses on the P.C. board.

Mark	Cymbol & Description	Part No.		Remarks
		for KU type	for HEM type	
⚠	C801 Ceramic capacitor	RCG-008	.....	0.01/AC250V
		.....	RCG-009	0.01/AC400V
	C823	CKDYF 103Z 50	CKDYF 473Z 50	
	C824, C825	.....	CKDYF 473Z 50	

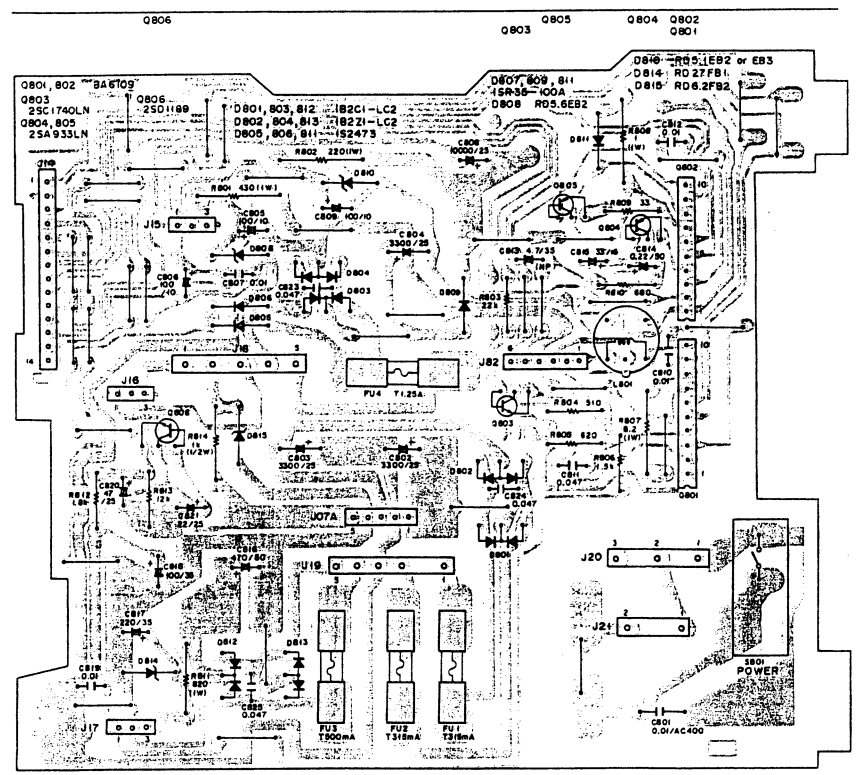

Power Supply Circuit for D Type

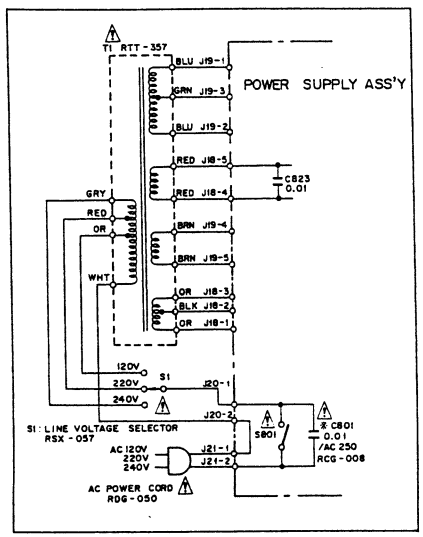

Power Supply Circuit for HEM Type

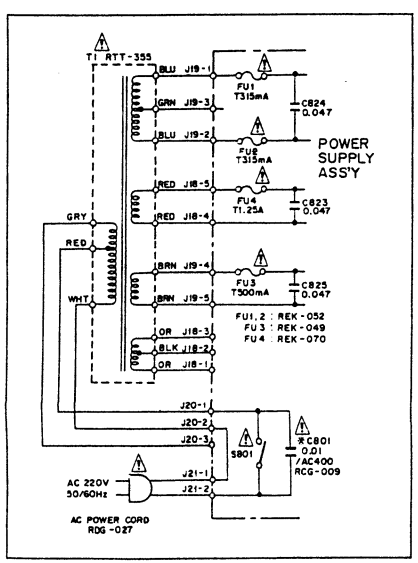

Power Supply Circuit for HB and HP Types