CT-F600 HE, HB, HP

SCHEMATIC DIAGRAM

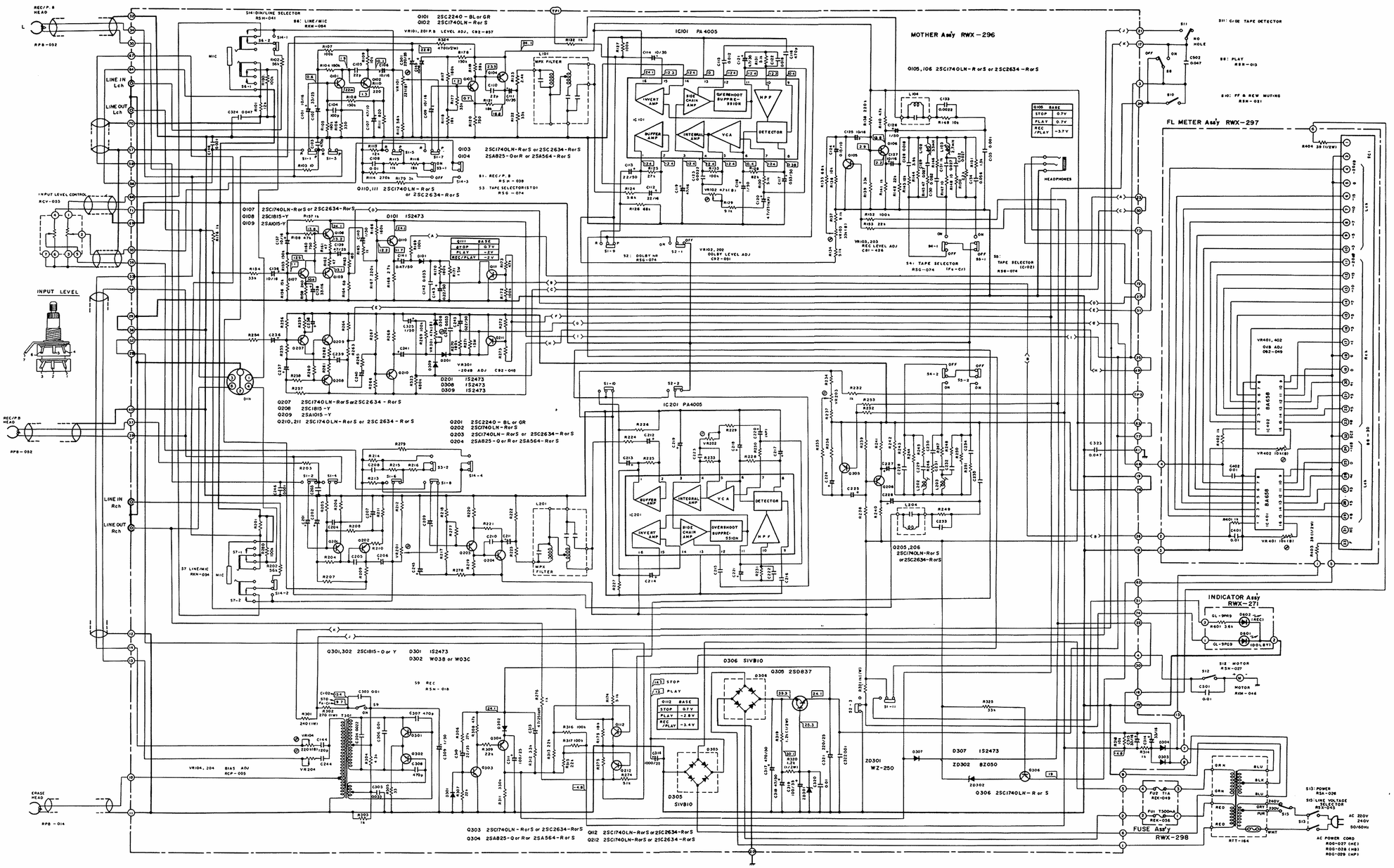

1. RESISTORS;
   Indicated in Ω, 1/4W, ±5% tolerance unless otherwise noted
   k:kΩ, M:MΩ, (F):±1%, (G):±2%, (K):±10% tolerance
2. CAPACITORS;
   Indicated in capacity(μF)/voltage(V) unless otherwise noted p;pF
   Indication without voltage is 50V except electrolytic capacitor.
3. VOLTAGE;
   ▭ ; DC voltage(V) at no input signal
4. OTHERS;
   ⊘ : Adjusting point

This is the basic schematic diagram, but the actual circuit may vary due to improvements in design.

SWITCHES

S1	REC/PLAYBACK SELECTOR	PLAYBACK-REC	S8	PLAY	OFF-ON	S14 DIN/LINE SELECTOR	LINE-DIN
S2	DOLBY NR	OFF-ON	S9	REC	OFF-ON	S15 LINE VOLTAGE SELECTOR	220V-240V
S3	TAPE SELECTOR (STD)	OFF-ON	S10	FF & TAPE DETECTOR	NO HOLE-HOLE		
S4	TAPE SELECTOR (Fe-Cr)	OFF-ON	S12	MOTOR	OFF-ON		
S5	TAPE SELECTOR (CrO2)	OFF-ON	S13	POWER	OFF-ON		
S6	7 LINE/MIC SELECTOR	LINE-MIC					

The underlined indicates the switch position.