Service Manual

Pioneer

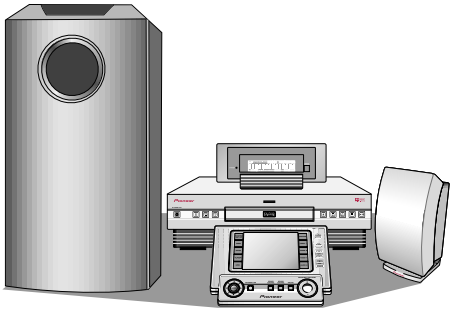

ORDER NO.
RRV2111

DVD SURROUND SYSTEM
HTZ-7
DVD CENTER UNIT
HTZ-C7
POWERED SUBWOOFER SATELLITE SPEAKER
HTZ-SW7, HTZ-ST7

THIS MANUAL IS APPLICABLE TO THE FOLLOWING MODEL(S) AND TYPE(S).

Type	Model	Power Requirement	Remarks
	HTZ-7		
MY	○	AC220- 230V	

- **This product is a system(s) component.**
  This product does not function properly when independent; to avoid malfunctions, be sure to connect it to the prescribed system component(s), otherwise damage may result.
- **HTZ-7 is a combination of the following components.**

DVD SURROUND SYSTEM (HTZ-7)
- **DVD CENTER UNIT (HTZ-C7)**
- **POWERED SUBWOOFER (HTZ-SW7)**
  - **AMP ASSY (A-SW7)**
  - **SATELLITE SPEAKER (HTZ-ST7)**

CONTENTS

1. SAFETY INFORMATION 2
2. EXPLODED VIEWS AND PARTS LIST 4
3. SCHEMATIC DIAGRAM 21
4. PCB CONNECTION DIAGRAM 56
5. PCB PARTS LIST 81
6. ADJUSTMENT 92
7. GENERAL INFORMATION 101
   7.1 PARTS 101
      7.1.1 IC 101
      7.1.2 DISPLAY 107
   7.2 DIAGNOSIS 108
      7.2.1 FAIL-SAFE 108
      7.2.2 SINGLE UNIT OPERATION METHODS .. 109
      7.2.3 DISASSEMBLY 111
      7.2.4 TEST MODE 116
   7.3 BLOCK DIAGRAM 120
   7.4 REMOTE CONTROL UNIT 122
      7.4.1 EXPLODED VIEWS AND PARTS LIST ... 122
      7.4.2 SCHEMATIC DIAGRAM 124
8. PANEL FACILITIES AND SPECIFICATIONS 125

PIONEER ELECTRONIC CORPORATION 4-1, Meguro 1-Chome, Meguro-ku, Tokyo 153-8654, Japan
PIONEER ELECTRONICS SERVICE, INC. P.O. Box 1760, Long Beach, CA 90801-1760, U.S.A.
PIONEER ELECTRONIC (EUROPE) N.V. Haven 1087, Keetberglaan 1, 9120 Melsele, Belgium
PIONEER ELECTRONICS ASIACENTRE PTE. LTD. 253 Alexandra Road, #04-01, Singapore 159936

© PIONEER ELECTRONIC CORPORATION 1999

T–ZZY FEB. 1999 Printed in Japan

1. SAFETY INFORMATION

This service manual is intended for qualified service technicians; it is not meant for the casual do-it-yourselfer. Qualified technicians have the necessary test equipment and tools, and have been trained to properly and safely repair complex products such as those covered by this manual.
Improperly performed repairs can adversely affect the safety and reliability of the product and may void the warranty. If you are not qualified to perform the repair of this product properly and safely, you should not risk trying to do so and refer the repair to a qualified service technician.

WARNING
This product contains lead in solder and certain electrical parts contain chemicals which are known to the state of California to cause cancer, birth defects or other reproductive harm.

Health & Safety Code Section 25249.6 – Proposition 65

(FOR USA MODEL ONLY)

1. SAFETY PRECAUTIONS

The following check should be performed for the continued protection of the customer and service technician.

LEAKAGE CURRENT CHECK

Measure leakage current to a known earth ground (water pipe, conduit, etc.) by connecting a leakage current tester such as Simpson Model 229-2 or equivalent between the earth ground and all exposed metal parts of the appliance (input/output terminals, screwheads, metal overlays, control shaft, etc.). Plug the AC line cord of the appliance directly into a 120V AC 60 Hz outlet and turn the AC power switch on. Any current measured must not exceed 0.5 mA.

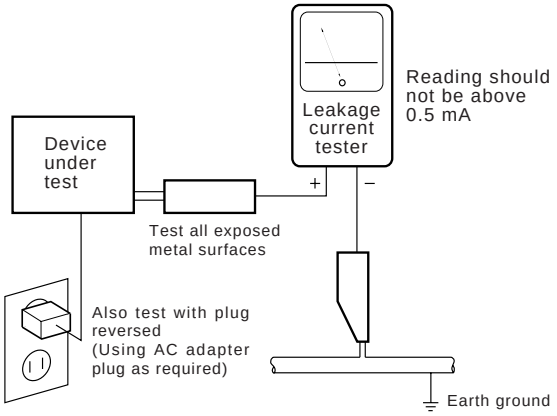

AC Leakage Test

ANY MEASUREMENTS NOT WITHIN THE LIMITS OUTLINED ABOVE ARE INDICATIVE OF A POTENTIAL SHOCK HAZARD AND MUST BE CORRECTED BEFORE RETURNING THE APPLIANCE TO THE CUSTOMER.

2. PRODUCT SAFETY NOTICE

Many electrical and mechanical parts in the appliance have special safety related characteristics. These are often not evident from visual inspection nor the protection afforded by them necessarily can be obtained by using replacement components rated for voltage, wattage , etc. Replacement parts which have these special safety characteristics are identified in this Service Manual.

Electrical components having such features are identified by marking with a ⚠ on the schematics and on the parts list in this Service Manual.
The use of a substitute replacement component which does not have the same safety characteristics as the PIONEER recommended replacement one, shown in the parts list in this Service Manual, may create shock, fire, or other hazards.

Product Safety is continuously under review and new instructions are issued from time to time. For the latest information, always consult the current PIONEER Service Manual. A subscription to, or additional copies of, PIONEER Service Manual may be obtained at a nominal charge from PIONEER.

IMPORTANT

THIS PIONEER APPARATUS CONTAINS LASER OF CLASS 1.
SERVICING OPERATION OF THE APPARATUS SHOULD BE DONE BY A SPECIALLY INSTRUCTED PERSON.

LASER DIODE CHARACTERISTICS

FOR DVD : MAXIMUM OUTPUT POWER : 7 mW
WAVELENGTH : 650 nm
FOR CD : MAXIMUM OUTPUT POWER : 5mW
WAVELENGTH : 780 – 785 nm

LABEL CHECK

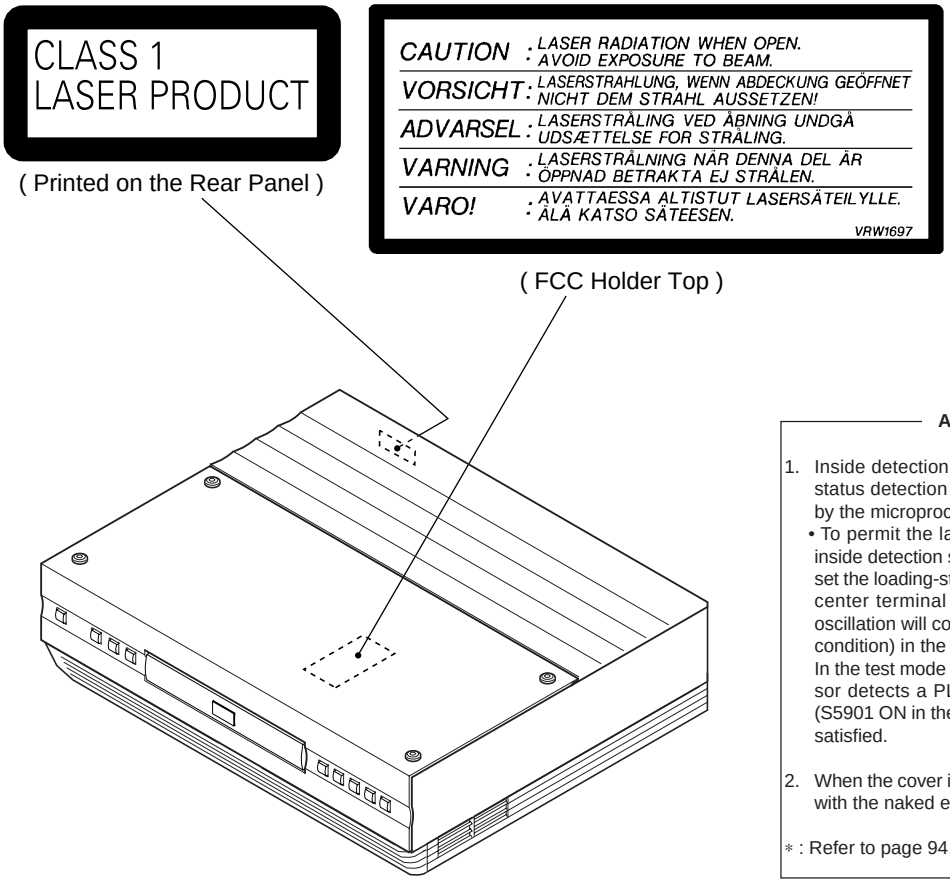

Additional Laser Caution

1. Inside detection switch (S201 on the INSB assy) and loading-status detection switch (S301 on the LOSB assy) are detected by the microprocessor (IC501 in the DVDM assy).
   • To permit the laser diode to oscillate, it is required to set the inside detection switch for the inside position (S201 : ON) and to set the loading-status detection switch for the clamp position (the center terminal of S301 is shorted to +5V). The laser diode oscillation will continue if pin 13 of IC101 is shorted to +5V (fault condition) in the DVDM assy.
   In the test mode ∗ , the laser diode oscillates when microprocessor detects a PLAY signal, or when the PLAY key is pressed (S5901 ON in the FRONT(1) assy), with the above requirements satisfied.

2. When the cover is open, close viewing through the objective lens with the naked eye will cause exposure to the laser beam.

∗ : Refer to page 94.

2. EXPLODED VIEWS AND PARTS LIST

NOTES :
- *Parts marked by " NSP " are generally unavailable because they are not in our Master Spare Parts List.*
- *The ⚠ mark found on some component parts indicates the importance of the safety factor of the part. Therefore, when replacing, be sure to use parts of identical designation.*
- *Screw adjacent to ▼ mark on the product are used for disassembly.*

2.1 DVD CENTER UNIT (HTZ-C7)

2.1.1 PACKING

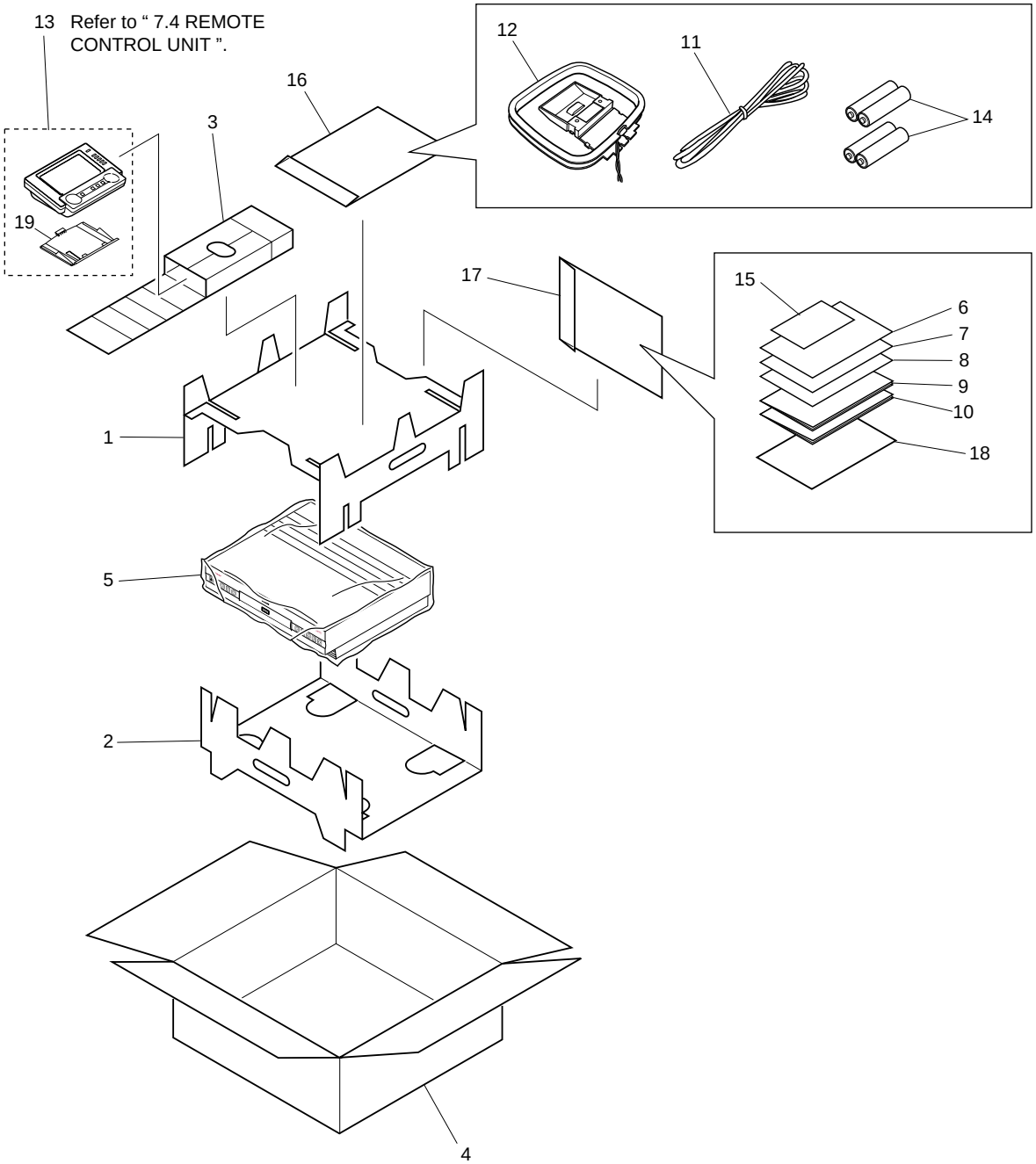

■ PACKING PARTS LIST

Mark	No.	Description	Part No.
	1	Protector A	AHA7242
	2	Protector B	AHA7257
	3	Protector C	AHA7244
	4	Packing Case	AHD7772
	5	Packing Sheet (750 × 600 × 0.5)	Z23–007
	6	Operating Instructions (Setting up the HTZ–7) (English/French/German/Italian)	ARE7230
	7	Operating Instructions (Setting up the HTZ–7) (Dutch/Spanish/Swedish)	ARE7231
	8	Operating Instructions (Basic/Detailed) (English/French)	ARE7218
	9	Operating Instructions (Basic/Detailed) (Italian/German)	ARE7226
	10	Operating Instructions (Basic/Detailed) (Dutch/Spanish/Swedish)	ARE7227
	11	FM Antenna	ADH7005
	12	AM Loop Antenna	ATB7009
	13	Remote Control (CU–HT005)	AXD7232
NSP	14	Alkaline Batteries (AA/LR6)	VEM1012
NSP	15	Warranty	ARY7022
	16	Polyethylene Bag (0.03 × 230 × 340)	Z21–038
NSP	17	Polyethylene Bag (0.1 × 350 × 440)	Z21–040
	18	Protector E	AHA7258
	19	Battery Cover	103RRC14701R

2.1.2 EXTERIOR (1/2)

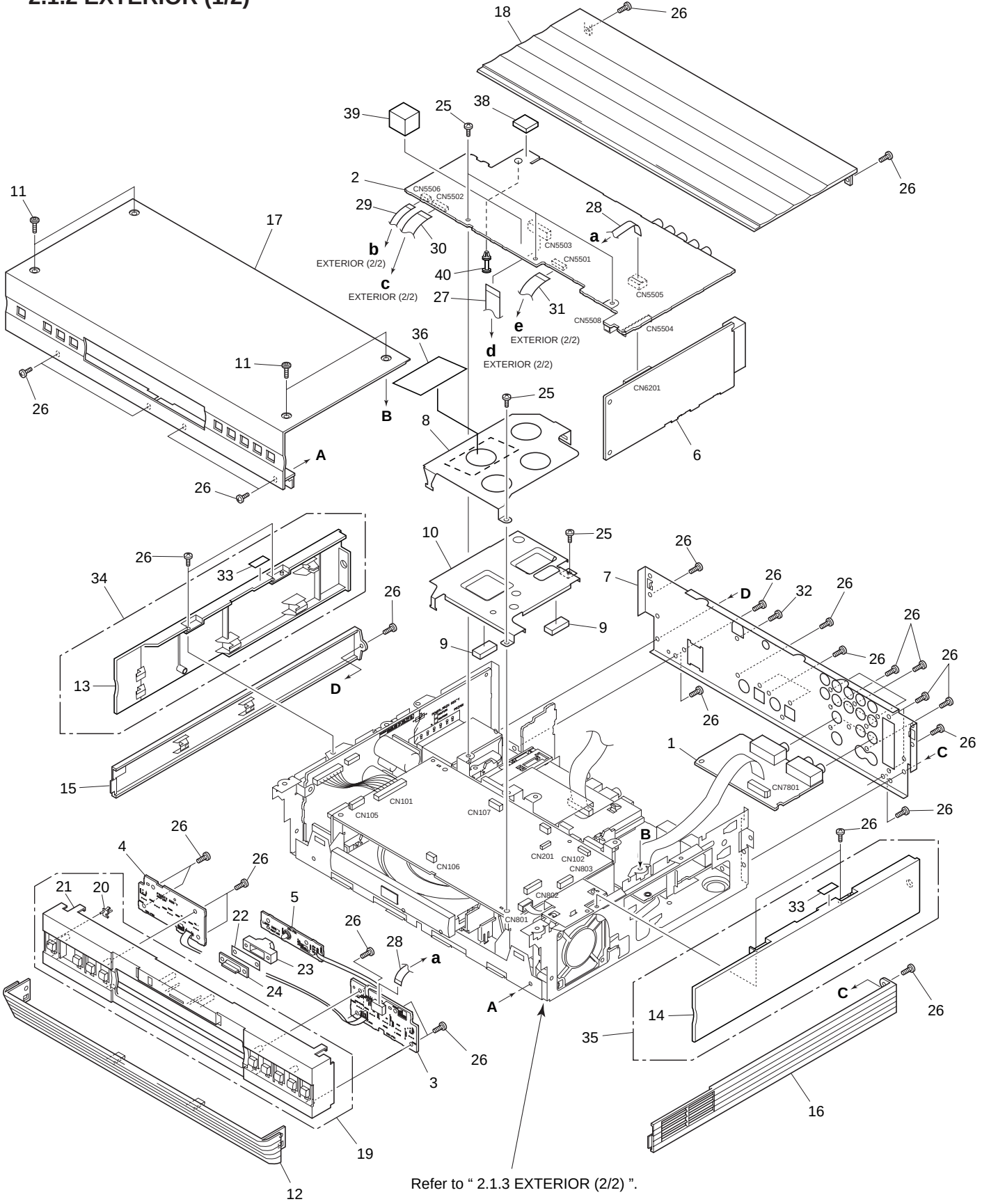

■ EXTERIOR (1/2) PARTS LIST

Mark	No.	Description	Part No.
	1	VIDEO ASSY	AWU7402
	2	MOTHER ASSY	AWU7403
	3	FRONT (1) ASSY	AWU7163
	4	FRONT (2) ASSY	AWU7164
	5	LAMP ASSY	AWU7165
	6	FM/AM TUNER MODULE	AXQ7058
	7	Rear Panel	ANC7851
	8	FCC Holder	ANG7231
	9	Radiation Sheet	VEB1285
	10	Heat Sink	VNE2134
	11	Screw	ABA7048
	12	Front Skirt	AMB7528
NSP	13	Side Panel L	AMB7615
NSP	14	Side Panel R	AMB7616
	15	Side Skirt L	AMB7532
	16	Side Skirt R	AMB7533
	17	Front Alumi	ANB7136
	18	Top Alumi	ANB7137
	19	Panel Base Assy	AXG7069
NSP	20	LED Lens	AAK7581
NSP	21	Panel Base	AMB7526
	22	Illumination Filter	VEC1950
	23	Illumination Holder	VNK4098
	24	Illumination Lens	VNK4168
	25	Screw	BBZ30P060FMC
	26	Screw	BBZ30P100FZK
	27	17P FFC/60V (CN5503 ⟷ CN7005)	ADD7108
	28	7P FFC/60V (CN5901 ⟷ CN5505)	ADD7115
	29	7P FFC/60V (CN106 ⟷ CN5506)	ADD7137
	30	14P FFC/60V (CN105 ⟷ CN5502)	ADD7138
	31	12P FFC/60V (CN301 ⟷ CN107, CN5501 ⟷ CN11)	ADD7139
	32	Screw (3 × 8)	ABA7050
NSP	33	Tape	AEB7143
	34	Side Panel L Assy	AXG7073
	35	Side Panel R Assy	AXG7074
	36	Caution Label	VRW1697
	37	• • • • •	
	38	Cushion E	AEB7140
	39	Cushion D	AEB71394
NSP	40	PCB Spacer	AEC7156

2.1.3 EXTERIOR (2/2)

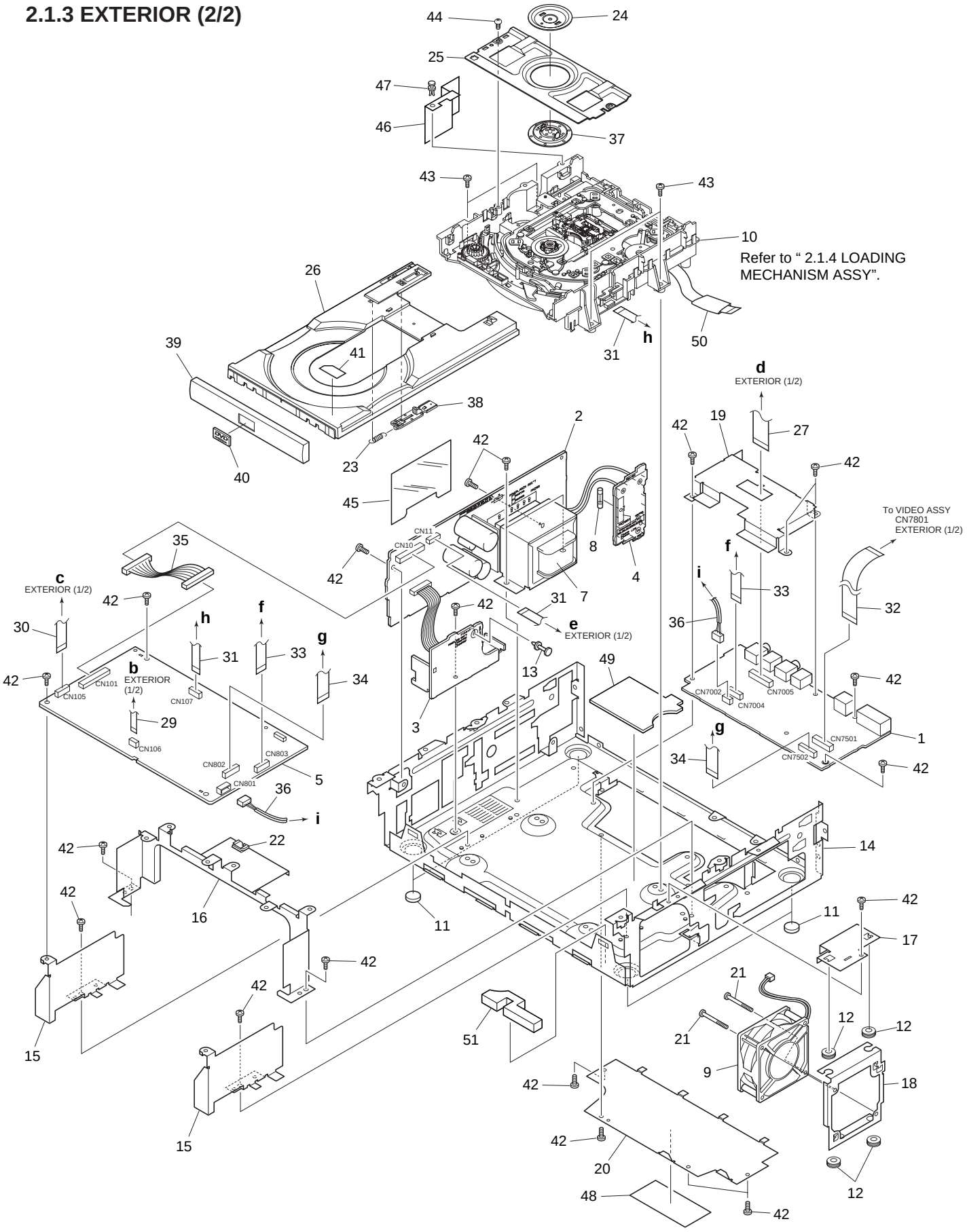

■ EXTERIOR (2/2) PARTS LIST

Mark	No.	Description	Part No.
	1	SVIDEO ASSY	AWU7401
	2	POWER MAIN ASSY	AWU7404
	3	POWER SUB ASSY	AWU7287
	4	AC ASSY	AWU7405
	5	DVDM ASSY	VWS1364
	6	• • • • •	
⚠	7	Power Transformer (T1)	ATS7246
⚠	8	Fuse (315mA/250V, FU1)	REK1017
	9	Fan Motor	AXM1019
NSP	10	Loading Mechanism Assy	VWT1147
	11	Leg	AEB7090
	12	Rubber Bush	AEB7134
	13	PCB Spacer (3 × 12)	AEC1372
NSP	14	Chassis	ANA7075
	15	PCB Holder (A)	ANG7202
	16	PCB Holder (B)	ANG7206
	17	Fan Cover	ANG7208
	18	Fan Holder	ANG7230
	19	Shield Case	ANK7046
	20	Cover	ANK7047
	21	Screw	BBZ30P300FZK
NSP	22	Edging Saddle (S)	DEC1761
	23	Tray Spring	VBH1277
	24	Clamper Plate	VNE2068
	25	Bridge	VNE2069
	26	Tray	VNL1731
	27	17P FFC/60V (CN5503 ⟷ CN7005)	ADD7108
	28	• • • • •	
	29	7P FFC/60V (CN106 ⟷ CN5506)	ADD7137
	30	14P FFC/60V (CN105 ⟷ CN5502)	ADD7138
	31	12P FFC/60V (CN301 ⟷ CN107, CN5501 ⟷ CN11)	ADD7139
	32	7P FFC/60V (CN7801 ⟷ CN7501)	ADD7109
	33	17P FFC/60V (CN802 ⟷ CN7502)	ADD7111
	34	14P FFC/60V (CN803 ⟷ CN7004)	ADD7112
	35	Housing Assy (14P) (CN101 ⟷ CN10)	AKP7033
	36	4P Connector (CN801 ⟷ CN7002)	AKP7046
	37	Clamper	VNL1738
	38	Tray Stopper	VNL1739
	39	Tray Panel	AMB7534
	40	DVD Badge	VAM1076
	41	Tray Label	VRW1628
	42	Screw	BBZ30P060FMC
	43	Screw	BBZ30P100FZK
	44	Screw	BPZ26P080FZK
	45	Insulation Sheet B	AEC7186
	46	Insulation Sheet	AEC7187
	47	Nylon Rivet (3 × 4.5)	RBM–003
	48	Label	ARW7053
	49	Cushion F	AEB7141
	50	Cushion G	AEB7142
	51	Spacer	AEB7151

2.1.4 LOADING MECHANISM ASSY

● **Top View**

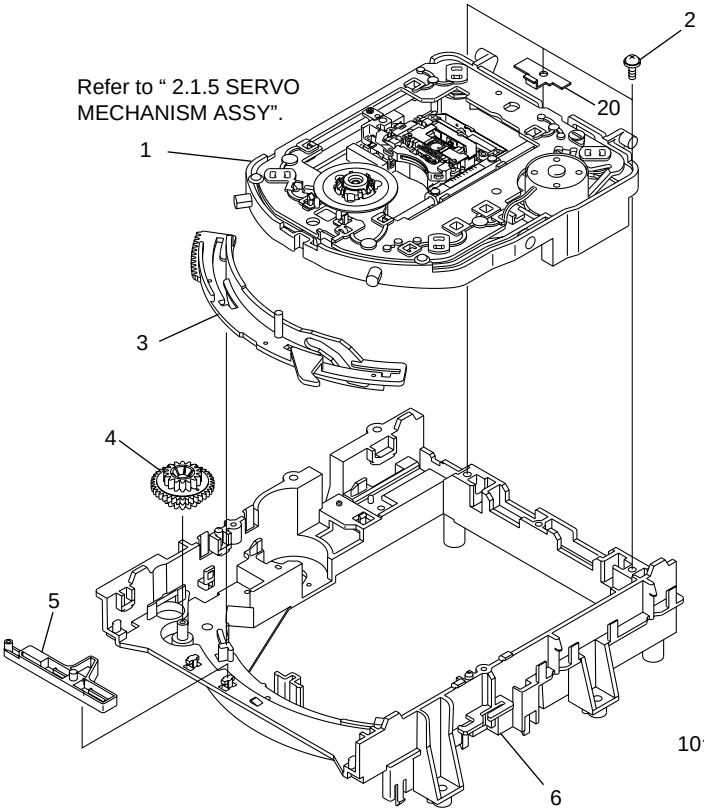

● **Bottom View**

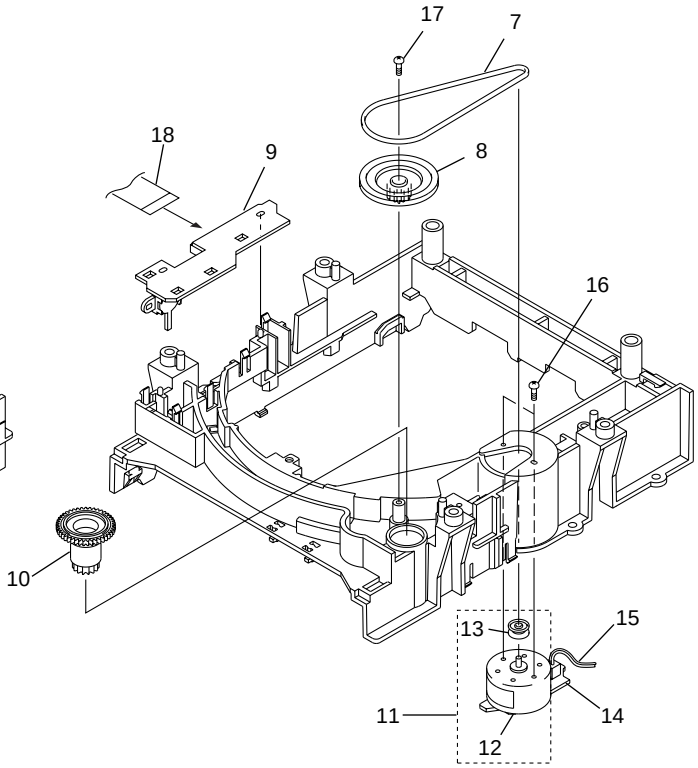

■ LOADING MECHANISM ASSY PARTS LIST

Mark	No.	Description	Part No.
	1	Servo Mechanism Assy-S	VXX2538
	2	Screw	DBA1006
	3	Drive Cam	VNL1736
	4	Drive Gear	VNL1735
	5	Lock Plate	VNL1820
	6	Loading Base	VNL1730
	7	Rubber Belt	VEB1260
	8	Gear Pulley	VNL1733
NSP	9	LOSB Assy	VWG1885
	10	Loading Gear	VNL1734
	11	Loading Motor Assy	VXX2505
	12	DC Motor	PXM1027
	13	Motor Pulley	PNW1634
NSP	14	LOMB Assy	VWG1886
	15	Connector Assy (2P) (LOMB CN401 ⟷ LOSB CN303)	VKP2198
	16	Screw	VBA1055
	17	Screw	Z39–019
	18	Flexible Cable (8P) (LOSB CN302 ⟷ INSB CN202)	VDA1649
	19	• • • • •	
	20	Stopper	DNH2076

2.1.5 SERVO MECHANISM ASSY

● **Top View** ● **Bottom View**

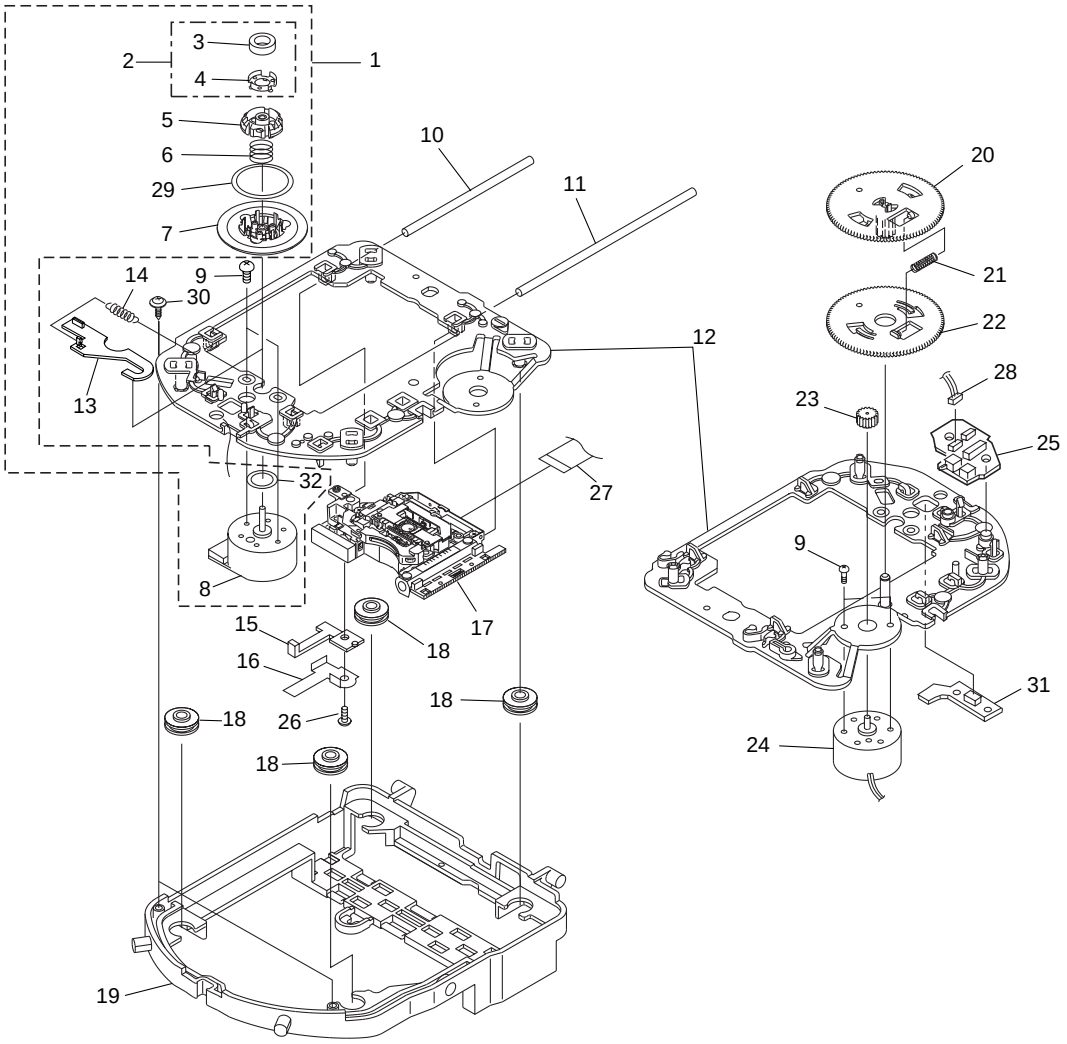

■ SERVO MECHANISM ASSY PARTS LIST

Mark	No.	Description	Part No.
	1	Spindle Motor Assy	VXX2563
	2	Magnet Holder Assy	VXX2507
NSP	3	Magnet	VYM1024
NSP	4	Magnet Holder	VNE2070
	5	Centering Ring	VNL1746
	6	Centering Spring	VBH1278
NSP	7	Disc Table	VNL1747
NSP	8	Motor	VXM1071
	9	Screw	JGZ17P028FMC
	10	Sub Guide Bar	VLL1489
	11	Guide Bar	VLL1488
	12	Mechanism Base	VNL1748
	13	Hook	VNL1770
	14	Hook Spring	VBH1291
	15	Slider	VNL1745
	16	Hold Spring	VNC1011

Mark	No.	Description	Part No.
⚠	17	Pickup Assy	VWY1046
	18	Floating Rubber	DEB1315
	19	Float Base	VNL1732
	20	Gear D	VNL1766
	21	Gear Spring	VBH1306
	22	Gear E	VNL1767
	23	Gear F	VNL1768
	24	Motor	VXM1062
NSP	25	INSB Assy	VWG1883
	26	Screw	PBZ20P050FMC
	27	Flexible Cable (20P) (DVDM CN102 ⟷ Pickup Assy)	VDA1680
	28	Connector Assy (3P) (INSB CN201 ⟷ FGSB CN101)	VKP2150
	29	Table Sheet	DEC2040
	30	Screw	PBA1048
NSP	31	FGSB Assy	VWG1884
NSP	32	Sheet	VEC1959

2.2 POWERED SUBWOOFER (HTZ-SW7)

2.2.1 PACKING

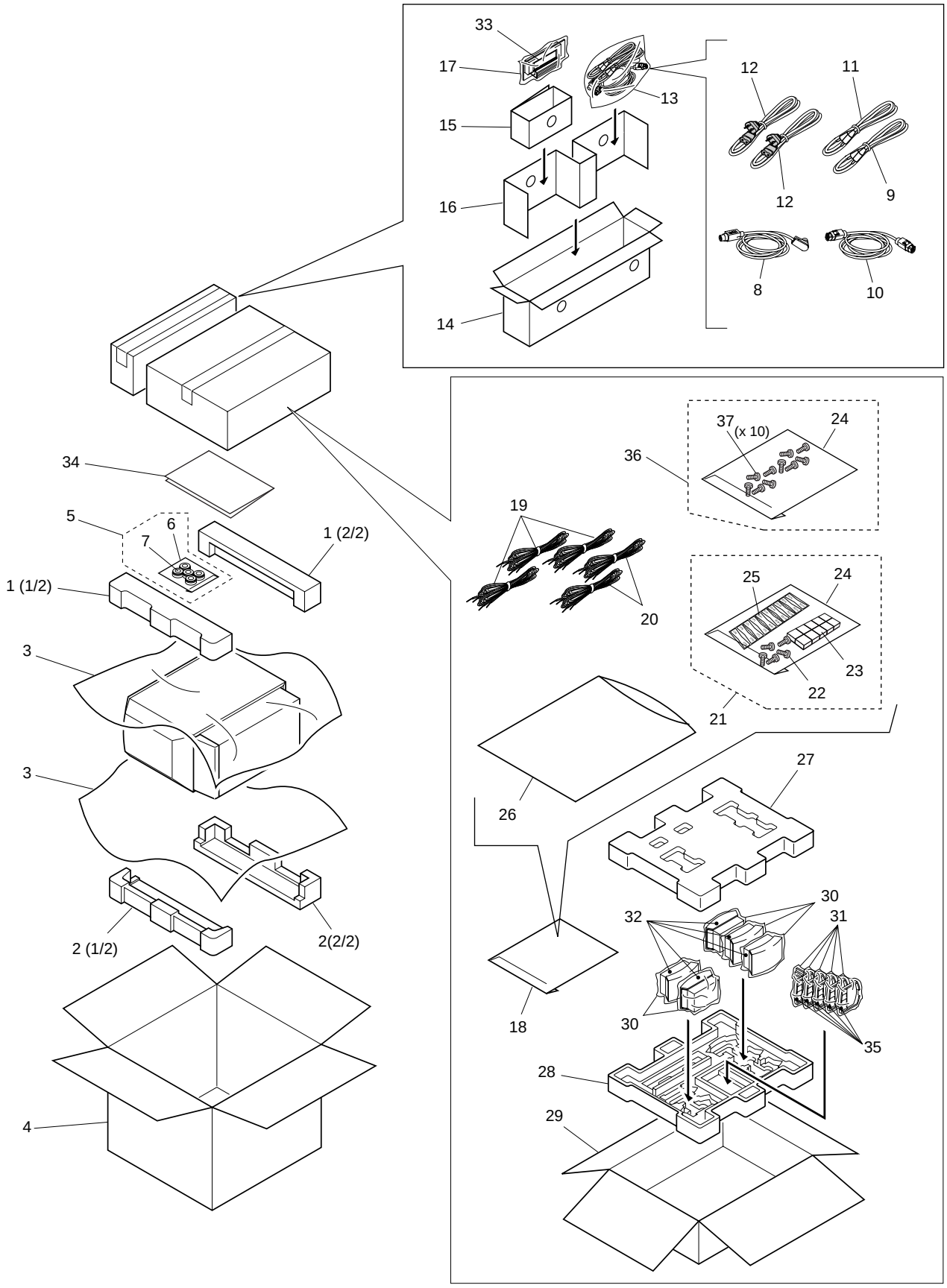

■ PACKING PARTS LIST

Mark	No.	Description	Part No.
	1	Protector (L)	SHA2138
	2	Protector (R)	SHA2139
	3	Packing Sheet	SHC1723
	4	Packing Case	SHG2205
NSP	5	Cushion Set	SEA1528
NSP	6	Polyethylene Bag	SHL–051
	7	Feet	SXK1046
	8	Display Cable (L= 3m)	ADE7027
	9	Digital Audio Cable (L= 3m)	ADE7028
	10	Control Cable (L= 3m)	ADE7031
	11	Video Cable (L= 3m)	ADE7036
⚠	12	AC Power Cord	ADG1127
	13	Polyethylene Bag (0.03 × 230 × 340)	Z21–038
	14	Packing Case (for Accessories)	AHD7650
	15	Packing Case (for Display Unit)	AHD7651
	16	Spacer	AHD7652
	17	Packing Sheet	RHC1052
NSP	18	Accessory Kit	SEA1535
	19	Speaker Cords (5m × 3)	SDS1053
	20	Speaker Cords (10m × 2)	SDS1054
NSP	21	Screw Package	SEA1530
	22	Installation Screws	BMZ40P120FMC
	23	Non Skid Pads	SEP1189
NSP	24	Polyethylene Bag S1	SHL1225
	25	Cord Labels	SRW1066
NSP	26	Polyethylene Bag S2	SHL1223
	27	Top Protector	SHA2134
	28	Bottom Protector	SHA2135
	29	Packing Case	SHG2204
NSP	30	Polyethylene Bag S2	SHL1224
NSP	31	Polyethylene Bag S1	SHL1225
NSP	32	Satellite Speakers	HTZ–ST7
NSP	33	Display Unit	DU–HT7
	34	Caution Card	ARB7190
	35	Mini Stand	SNK2312
NSP	36	Screw Package	SEA1537
	37	Sound Quality Adustment Screw	BMZ40P060FMC

2.2.2 EXTERIOR

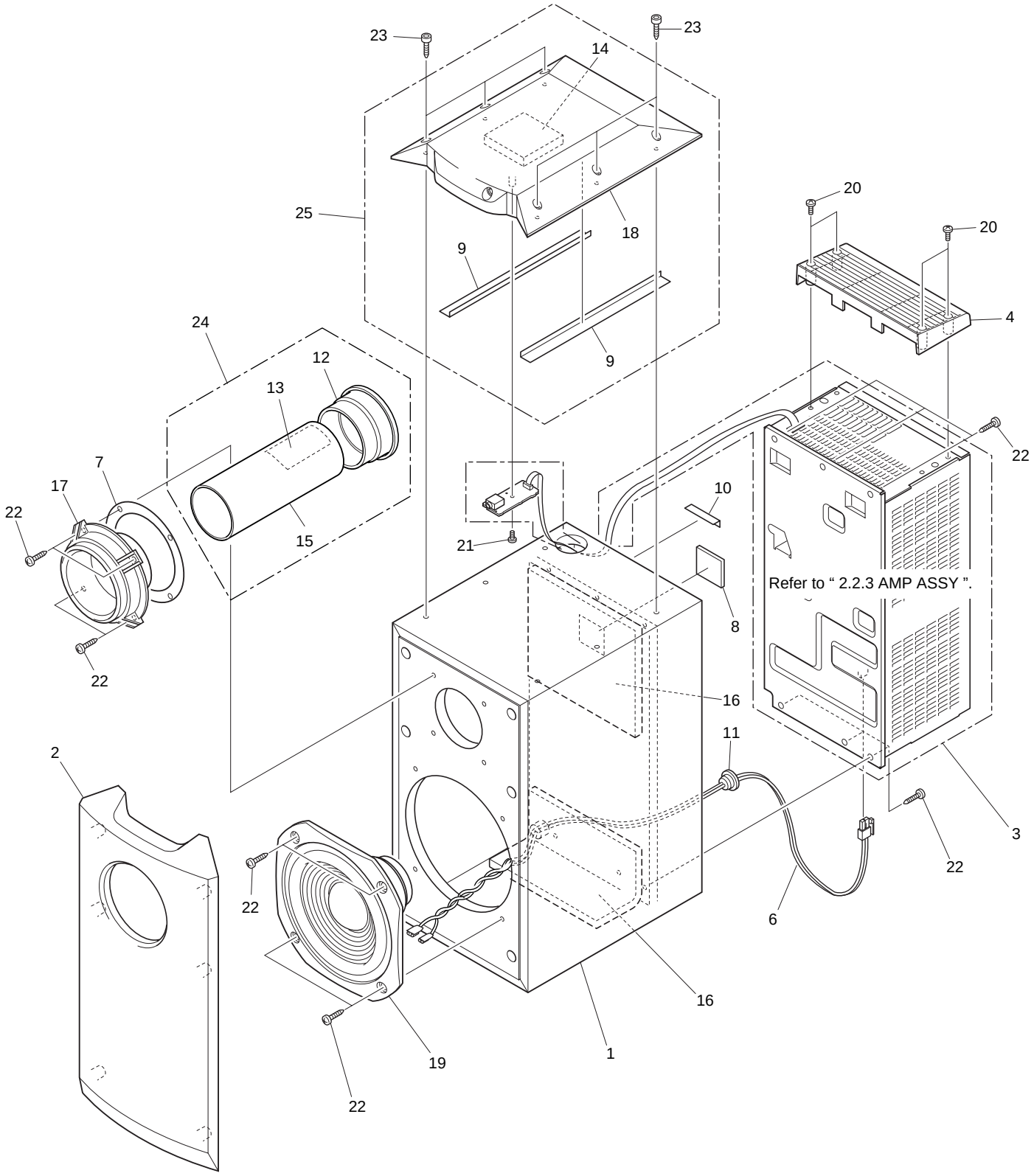

■ EXTERIOR PARTS LIST

Mark	No.	Description	Part No.
NSP	1	Cabinet	SMM1852
	2	Grille	SMG1623
NSP	3	Amp Assy	A–SW7
	4	Top Guard	AAK7646
	5	• • • • •	
	6	Connection Cord	SDF1070
	7	Packing	SEC1423
NSP	8	Packing	SEC1429
NSP	9	Damper	SEC1430
	10	Damper	SEC1431
NSP	11	Bush	SEP–150
NSP	12	Duct Ring 70	SEP1177
	13	Damper	SER1236
NSP	14	Damper Plate	SLX1142
NSP	15	Duct	SMR1281
NSP	16	Acoustic Absorbent	SMV1936
NSP	17	Duct Ring	SNK2348
NSP	18	Top Cover	SNK2354
	19	Speaker	Q20EU82–53F
	20	Screw (for Top Guard)	BBZ30P080FZK
	21	Screw (for HP Assy)	BPZ30P080FMC
	22	Screw (for Speaker, Duct and Amp Assy)	BYC40P200FZB
	23	Screw (For Top Cover)	SBA1095
	24	Duct Assy	SXB1367
	25	Top Cover Assy	SXB1371

2.2.3 AMP ASSY (A-SW7)

■ Exterior (1/2)

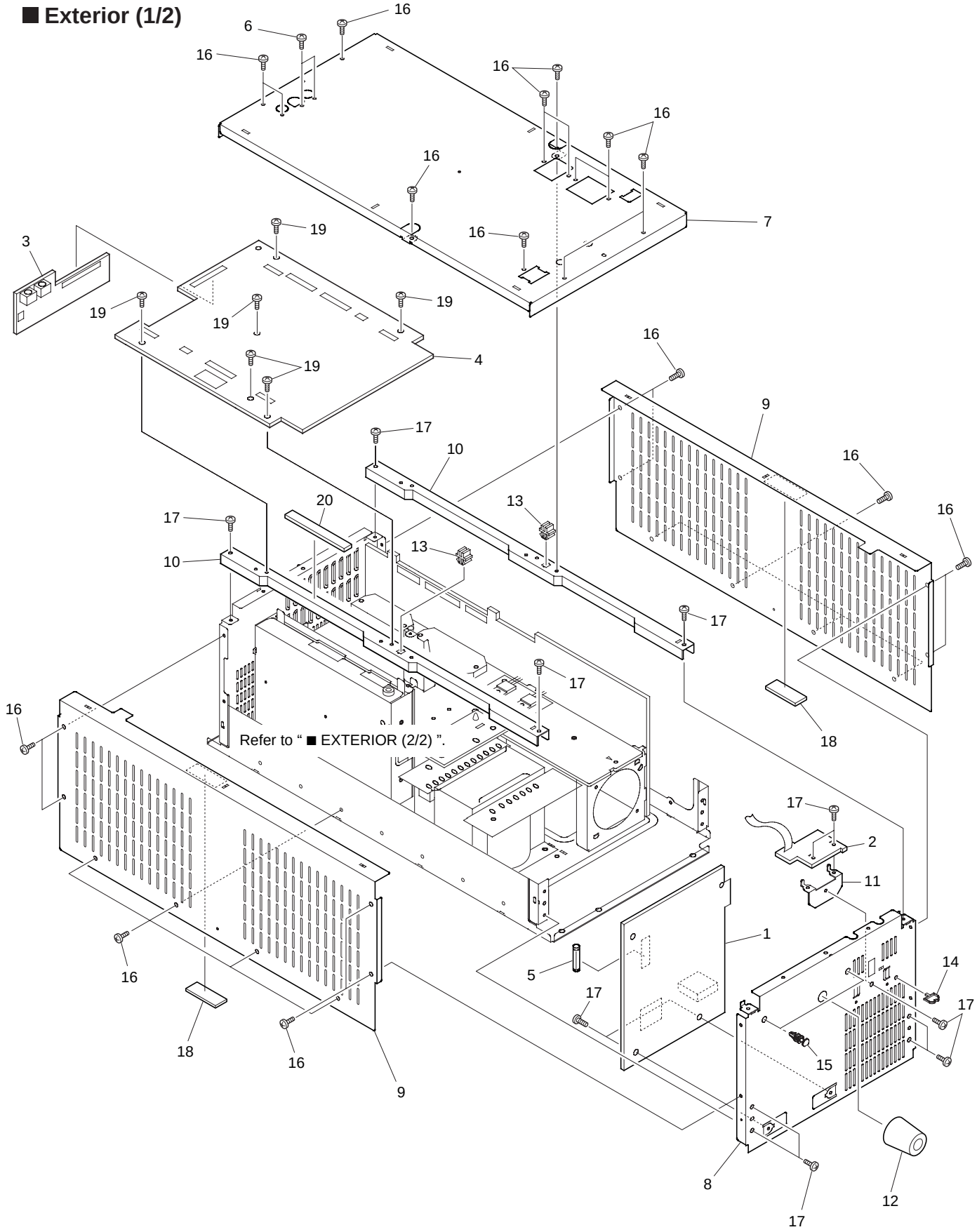

■ EXTERIOR (1/2) PARTS LIST

Mark	No.	Description	Part No.
	1	POWER SUPPLY ASSY	AWU7406
	2	SWF ASSY	AWU7408
	3	IF ASSY	AWU7293
	4	MAIN ASSY	AWU7364
⚠	5	Fuse (T2A, FU8001)	AEK1057
	6	Screw (3 × 8)	ABA7050
	7	Rear Panel	ANC7849
	8	Bottom Panel	ANC7706
	9	Side Panel	ANC7707
	10	Bridge	ANG7200
	11	PCB Holder	ANG7203
	12	Leg Assy	AEC7165
	13	PCB Fixing Jig	DEC1231
NSP	14	Cord Clamper S	DEC1574
NSP	15	PCB Holder	PNW2029
	16	Screw	BBT30P080FZK
	17	Screw	BBZ30P080FMC
	18	Cushion C	AEB7138
	19	Screw	IBZ30P100FCC
	20	Cushion D	AEB7148

■ Exterior (2/2)

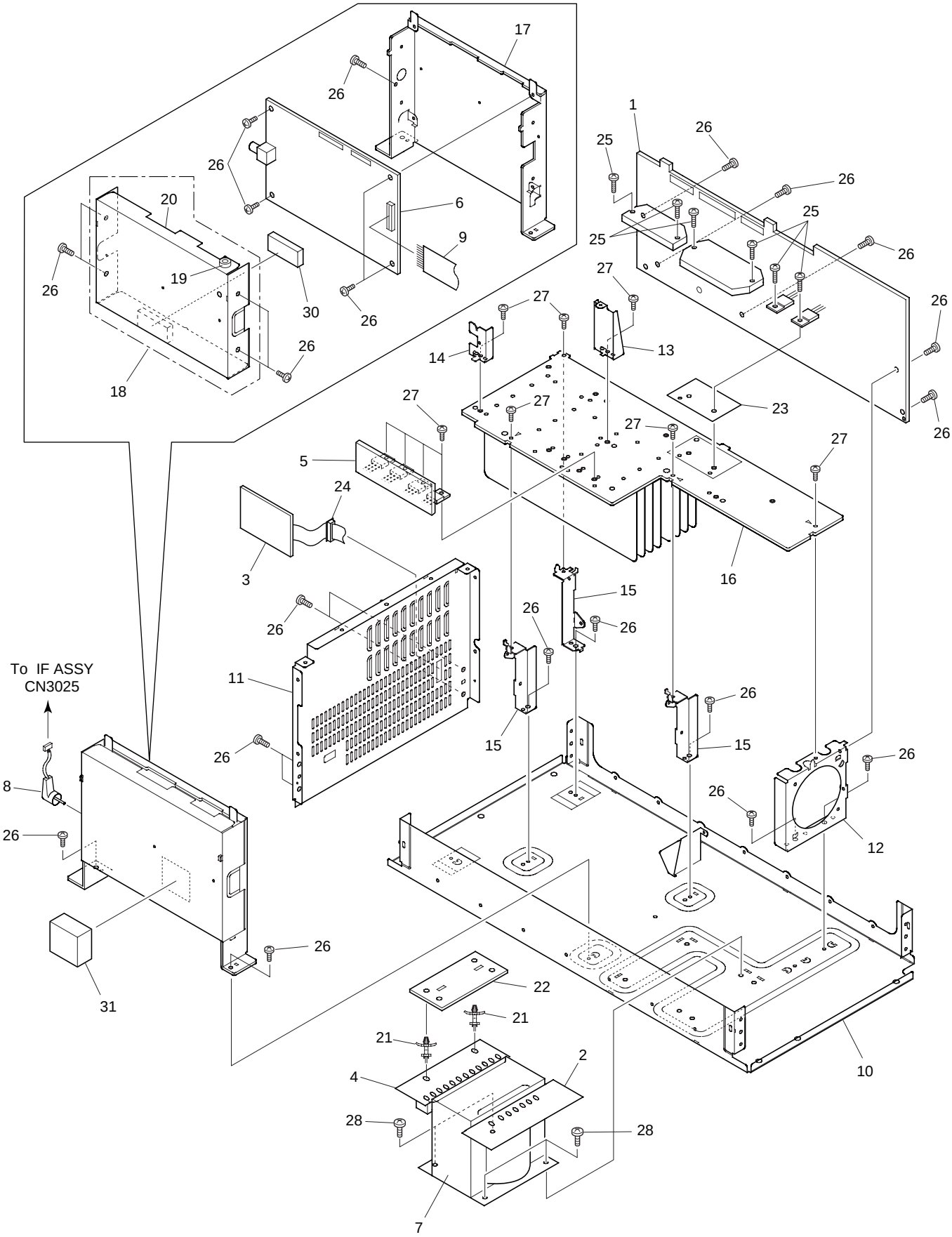
17
26
26
20
6
9
26
19
30
26
26
18
1
26
25
26
25
25
26
27
26
27
14
13
27
27
23
26
27
27
5
24
3
16
15
26
26
26
11
To IF ASSY
CN3025
26
15
26
15
26
8
26
26
12
26
31
22
21
21
2
4
10
28
28
7

■ EXTERIOR (2/2) PARTS LIST

Mark	No.	Description	Part No.
	1	AMP ASSY	AWU7407
	2	PRIMARY ASSY	AWU7418
	3	HP ASSY	AWU7409
	4	SECONDARY ASSY	AWU7417
	5	REG (1) ASSY	AWU7176
	6	DOLBY DIG 9624 ASSY	AWX7271
⚠	7	Power Transformer (T8001)	ATS7245
	8	Cord with Plug	ADE7030
	9	Jumper Wire	D15A10–150–2651
NSP	10	Chassis	ANA7074
	11	Top Panel	ANC7808
	12	Fan Holder	ANG7199
	13	PCB Holder	ANG7201
	14	IF Holder	ANG7204
	15	HS Holder	ANG7207
NSP	16	Heat Sink	ANH7091
	17	Shield Case (A)	ANK7044
NSP	18	Shield Case (B) Assy	AXA7074
NSP	19	Earth Sleeve	ALA7010
NSP	20	Shield Case (B)	ANK7045
NSP	21	PCB Support	AEC1006
	22	Insulation Sheet	AEC7148
	23	Mica Sheet	AEE7028
NSP	24	10P Bushing	AEC7211
	25	Screw (3 × 16)	ABA1056
	26	Screw	BBZ30P080FMC
	27	Screw	BBZ30P100FCC
	28	Screw	BCZ40P060FMC
	30	Cushion A	AEB7136
	31	Cushion B	AEB7137

2.2.4 SATELLITE SPEAKER (HTZ-ST7)

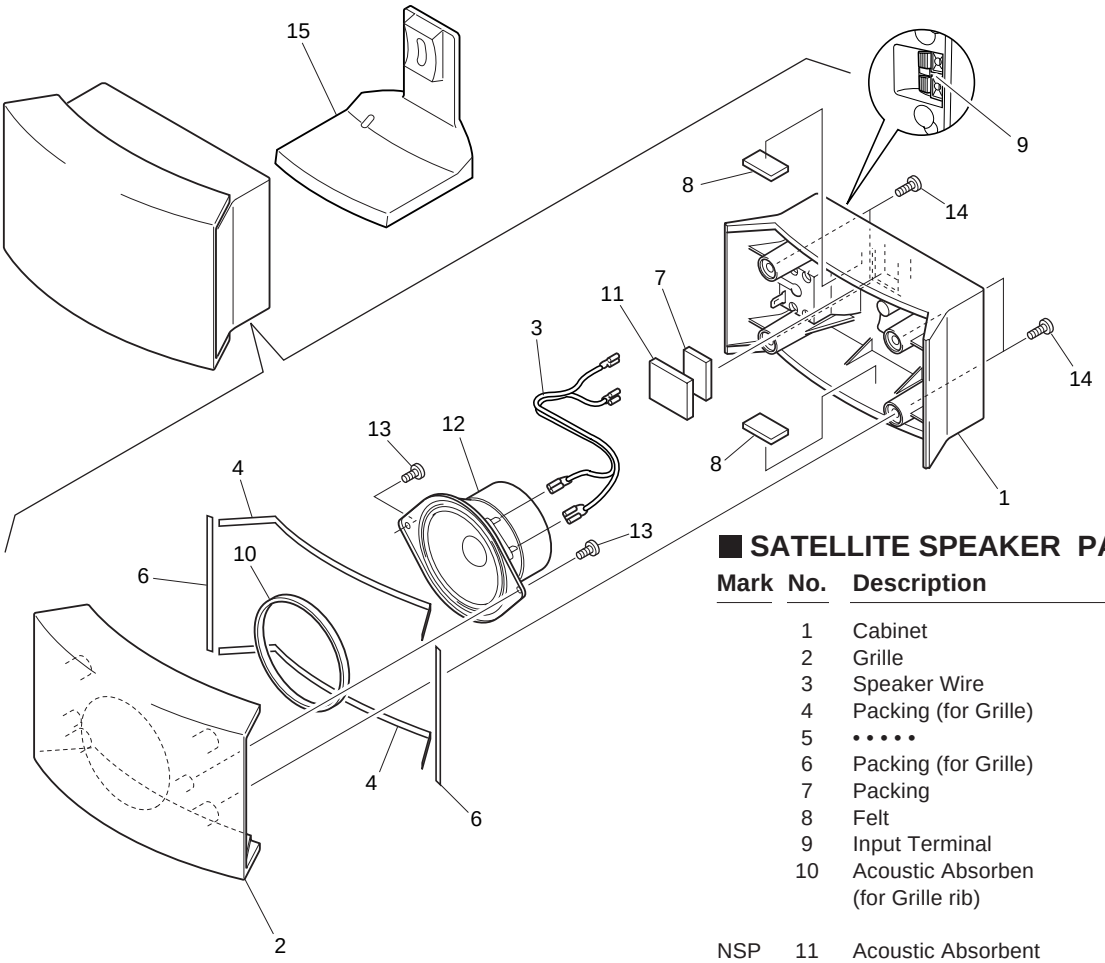

■ SATELLITE SPEAKER PARTS LIST

Mark	No.	Description	Part No.
	1	Cabinet	SNK2305
	2	Grille	SMG1618
	3	Speaker Wire	SDD1257
	4	Packing (for Grille)	SEC1398
	5	• • • • •	
	6	Packing (for Grille)	SEC1401
	7	Packing	SEE1066
	8	Felt	SER1255
	9	Input Terminal	SKX1056
	10	Acoustic Absorben (for Grille rib)	SMV1919
NSP	11	Acoustic Absorbent	SMV1937
	12	Speaker	B70AC45–57F
	13	Screw	BPZ40P060FMC
	14	Screw	BPZ40P120FMC
	15	Mini Stand	SNK2312

2.2.5 DISPLAY UNIT (DU-HT7)

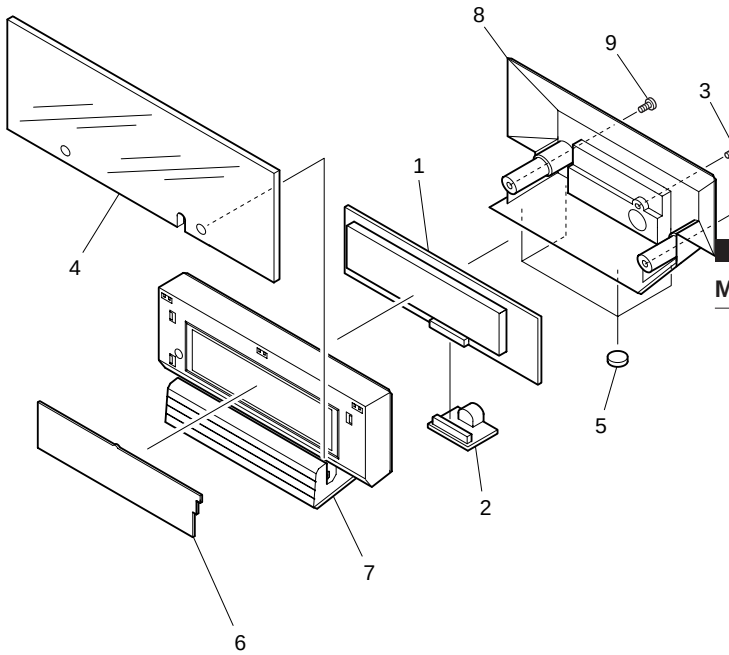

■ DISPLAY UNIT PARTS LIST

Mark	No.	Description	Part No.
	1	FLDP ASSY	AWU7410
	2	CNB ASSY	AWU7172
	3	Screw (3 × 8)	ABA7050
	4	Window	AAK7582
	5	Leg	AEB7090
	6	FL Filter	AEC7150
	7	Display Panel	AMB7531
	8	Rear Cover	AMC7030
	9	Screw	BPZ30P080FMC

3. SCHEMATIC DIAGRAM

Note: When ordering service parts, be sure to refer to "EXPLODED VIEWS AND PARTS LIST" or "PCB PARTS LIST".

3.1 DVD CENTER UNIT (HTZ-C7)

3.1.1 OVERALL CONNECTION DIAGRAM (1/2), LOMB, LOSB, INSB and FGSB ASSEMBLIES

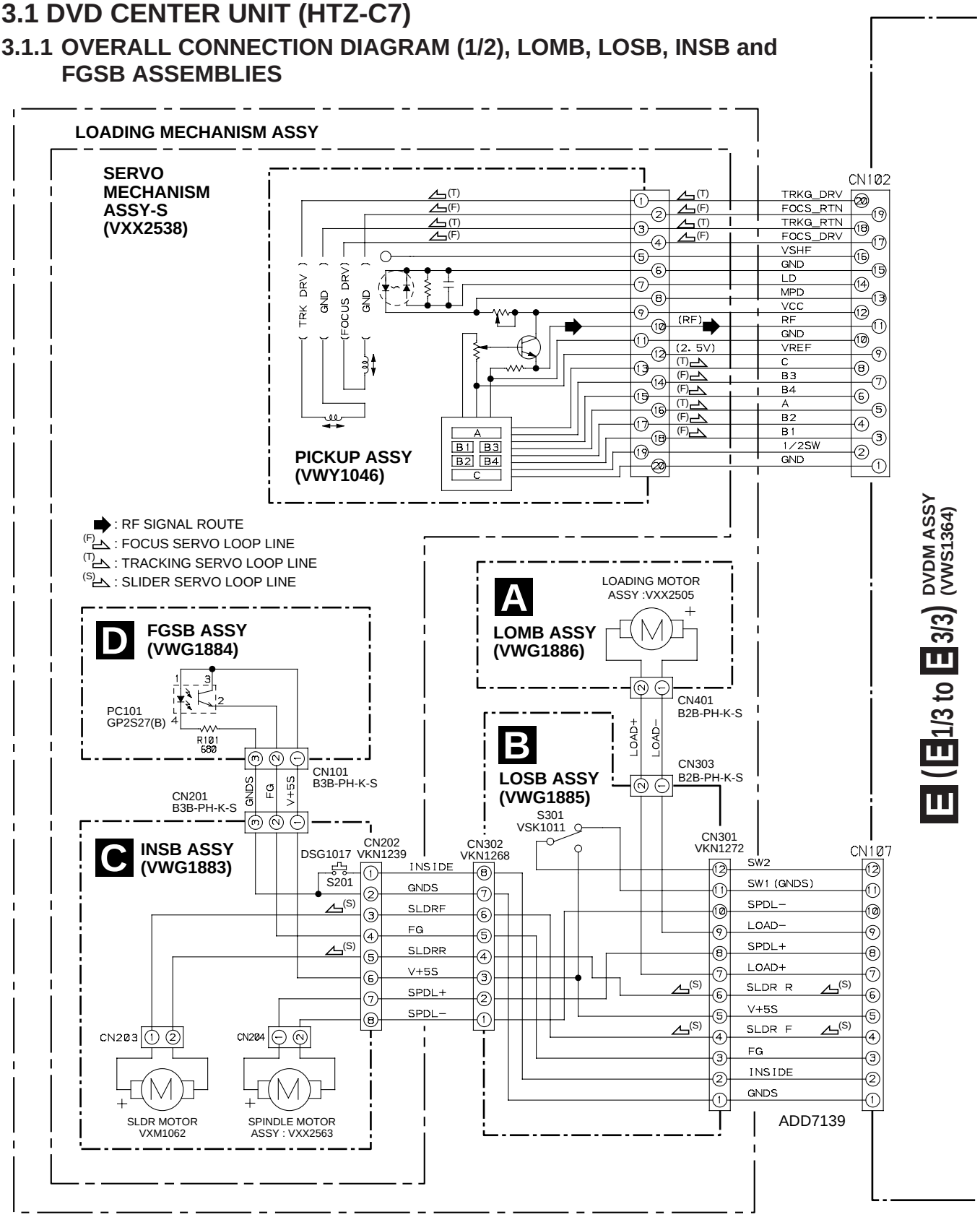

3.1.2 OVERALL CONNECTION DIAGRAM (2/2)

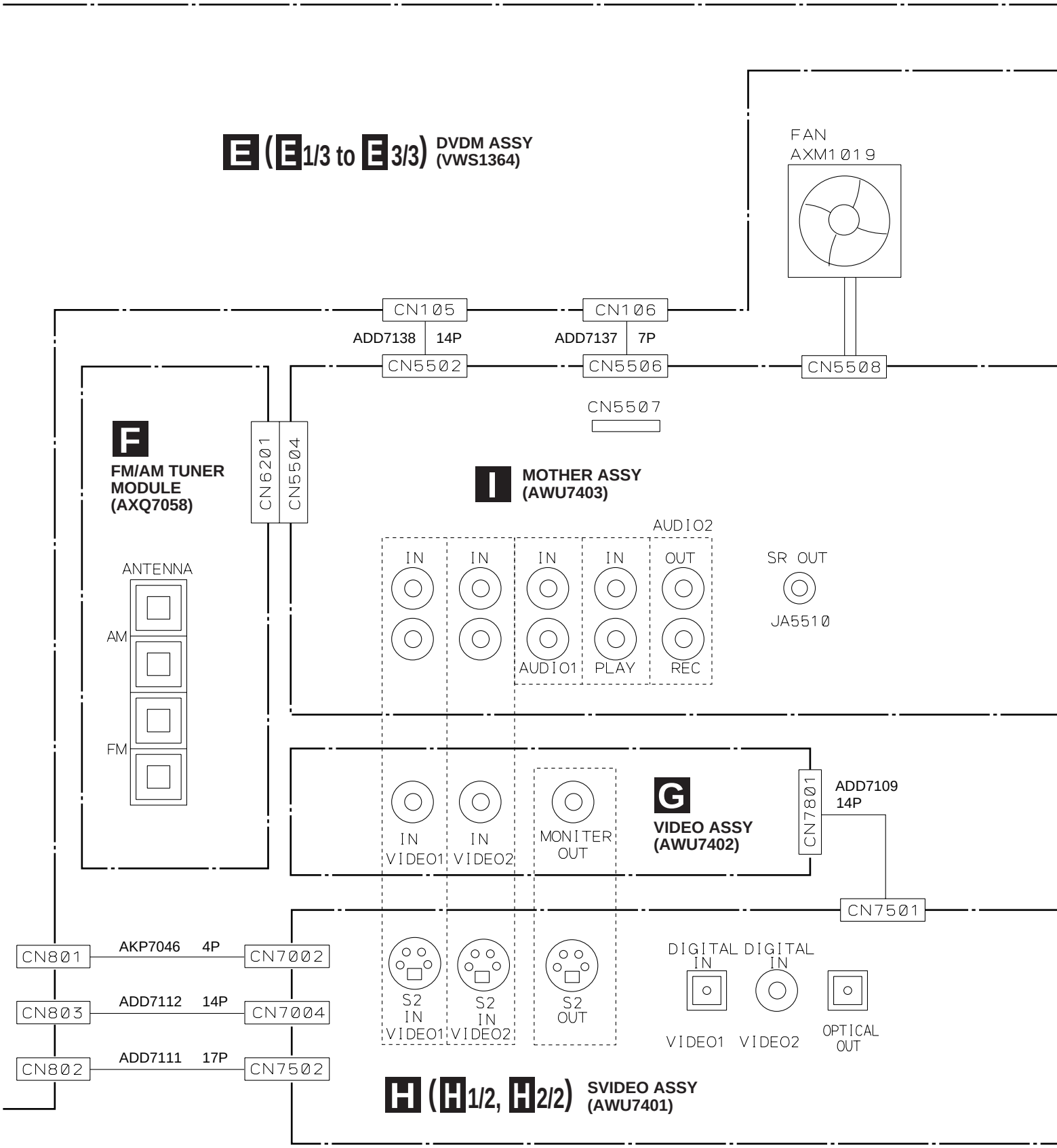

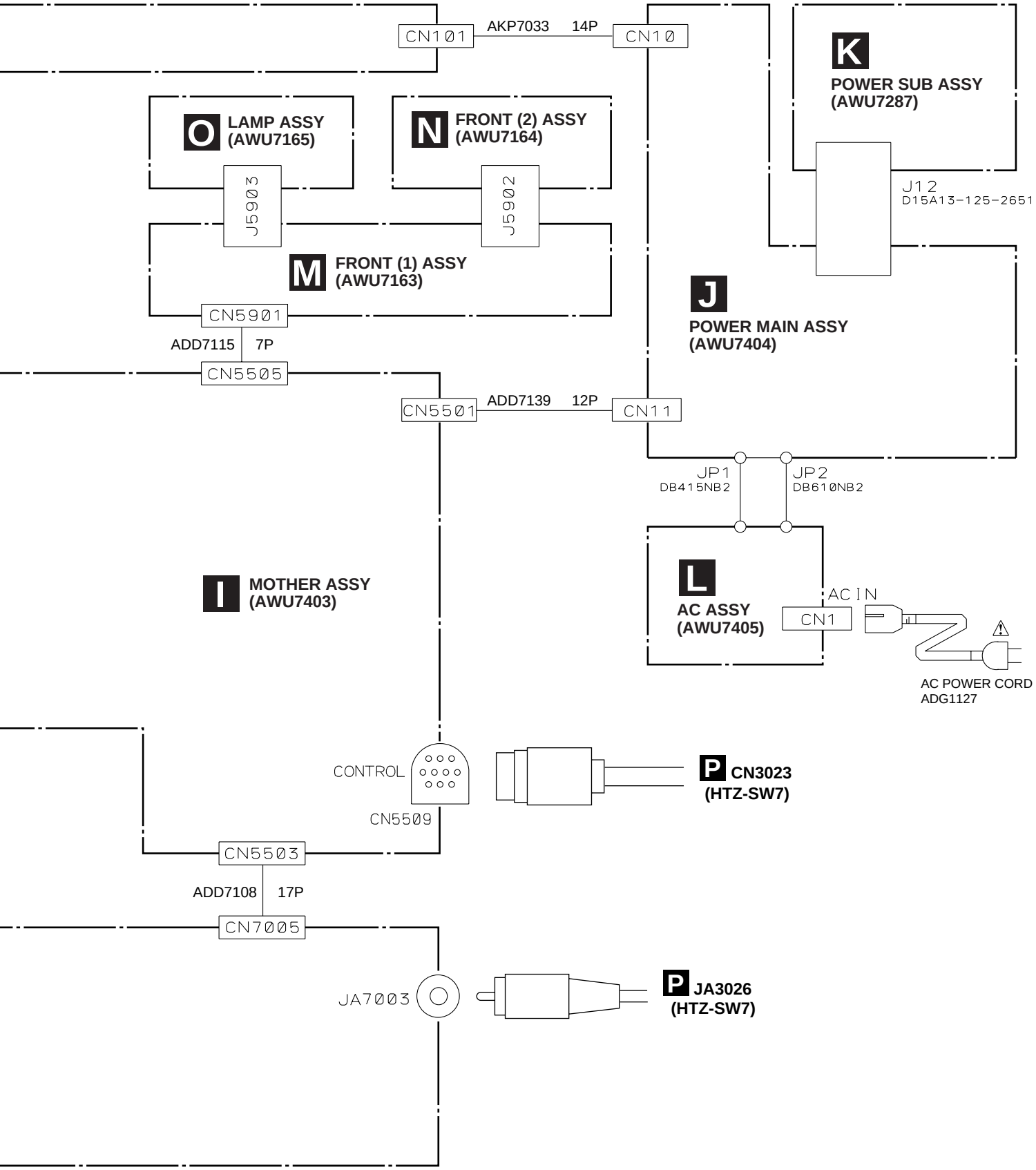
CN101
AKP7033
14P
CN10
K
POWER SUB ASSY
(AWU7287)
O
LAMP ASSY
(AWU7165)
N
FRONT (2) ASSY
(AWU7164)
J5903
J5902
J12
D15A13-125-2651
M
FRONT (1) ASSY
(AWU7163)
J
POWER MAIN ASSY
(AWU7404)
CN5901
ADD7115
7P
CN5505
CN5501
ADD7139
12P
CN11
JP1
DB415NB2
JP2
DB610NB2
I
MOTHER ASSY
(AWU7403)
L
AC ASSY
(AWU7405)
AC IN
CN1
AC POWER CORD
ADG1127
CONTROL
CN5509
P
CN3023
(HTZ-SW7)
CN5503
ADD7108
17P
CN7005
JA7003
P
JA3026
(HTZ-SW7)

3.1.3 DVDM ASSY (1/3)

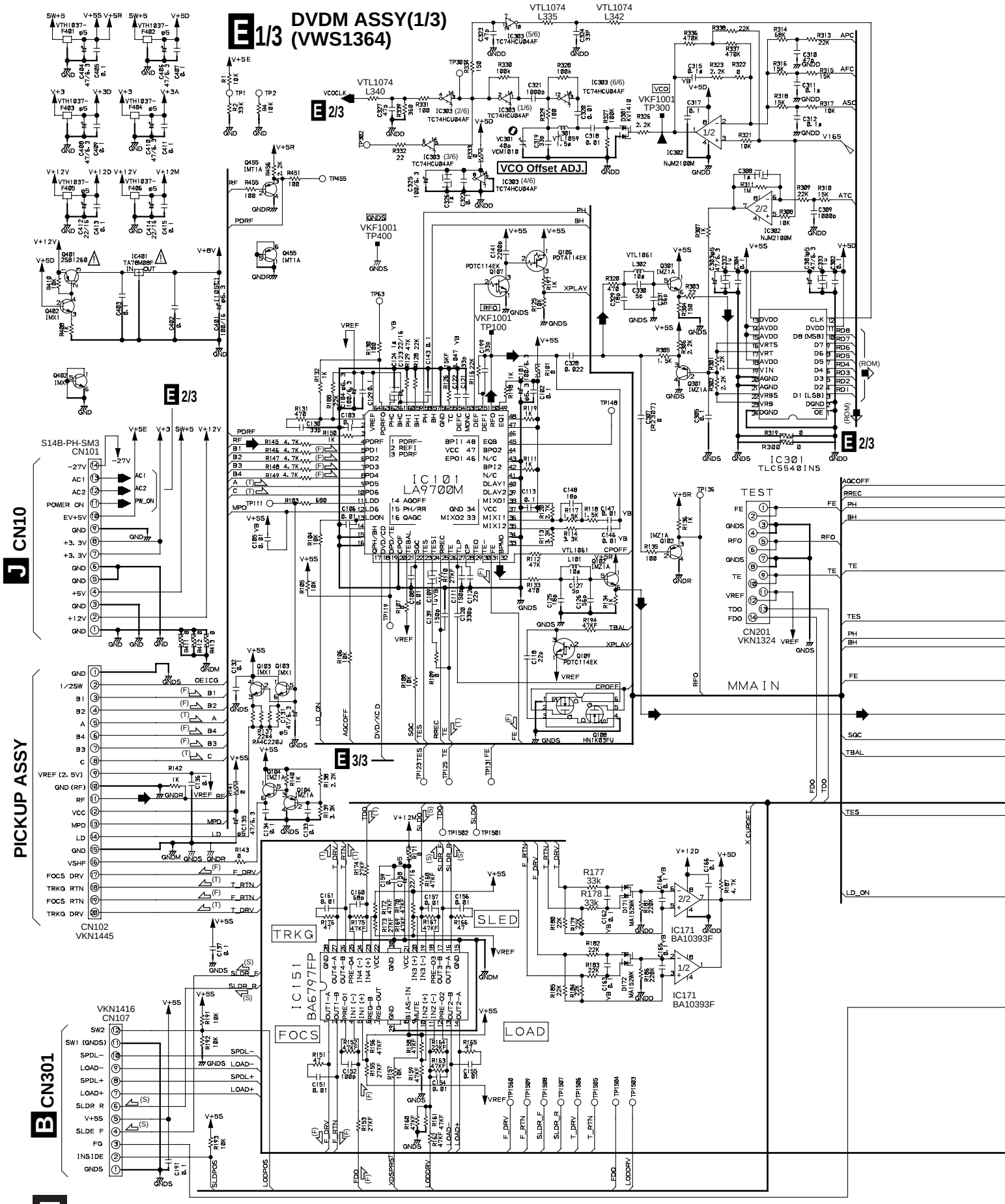

: RF SIGNAL ROUTE
(ROM) : ROM DATA SIGNAL ROUTE
(F) : FOCUS SERVO LOOP LINE
(T) : TRACKING SERVO LOOP LINE
(S) : SLIDER SERVO LOOP LINE

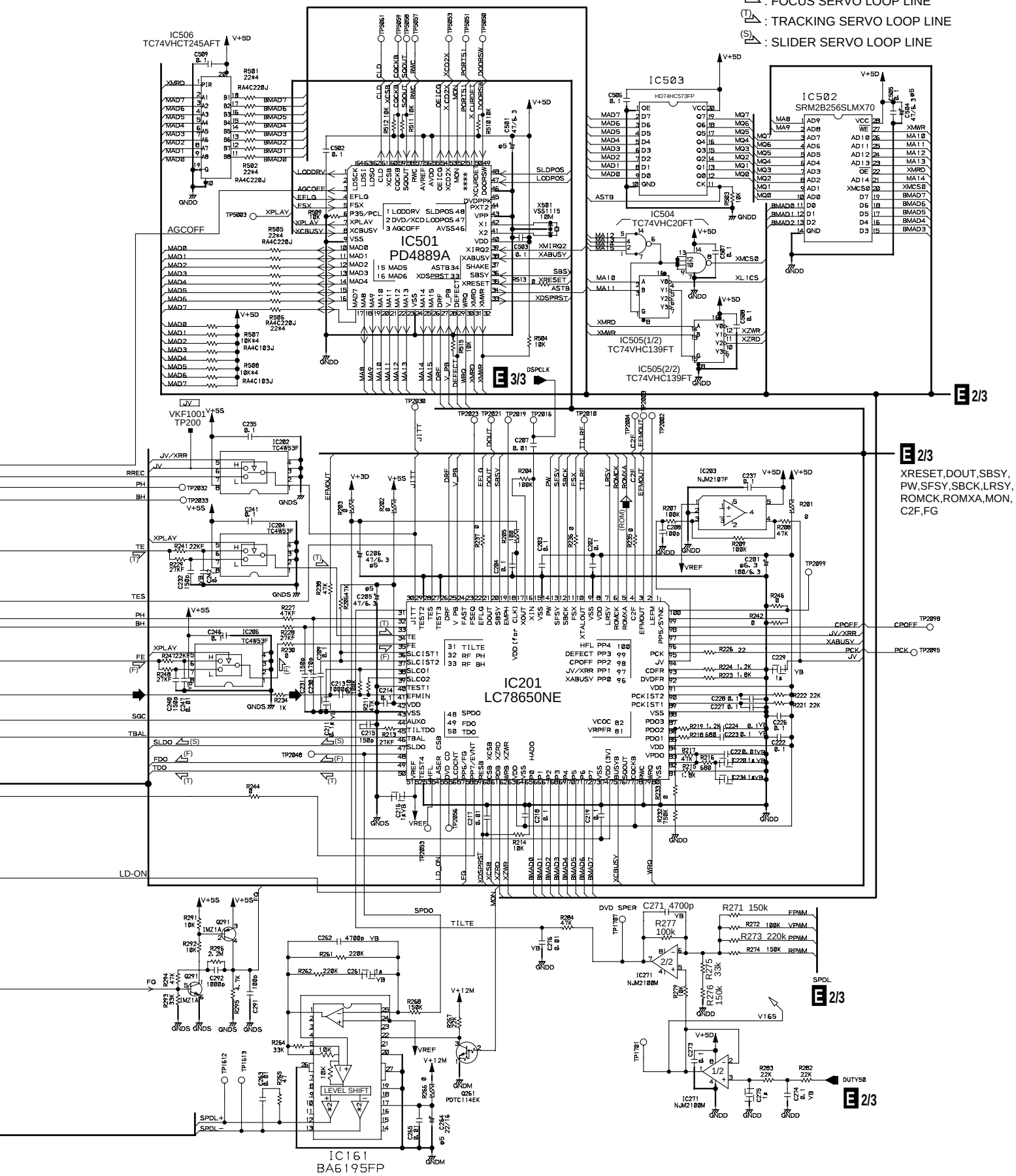

3.1.4 DVDM ASSY (2/3)

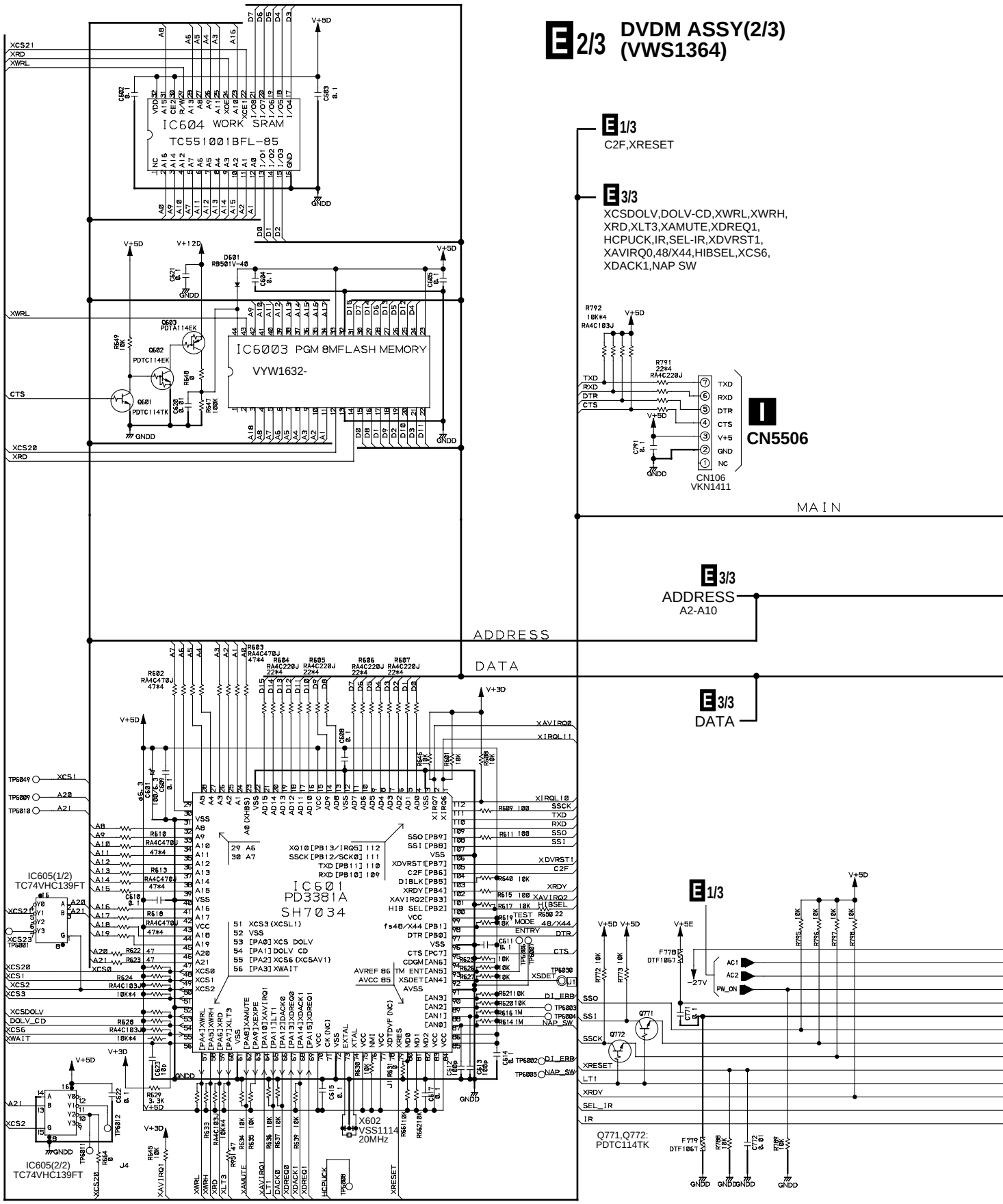

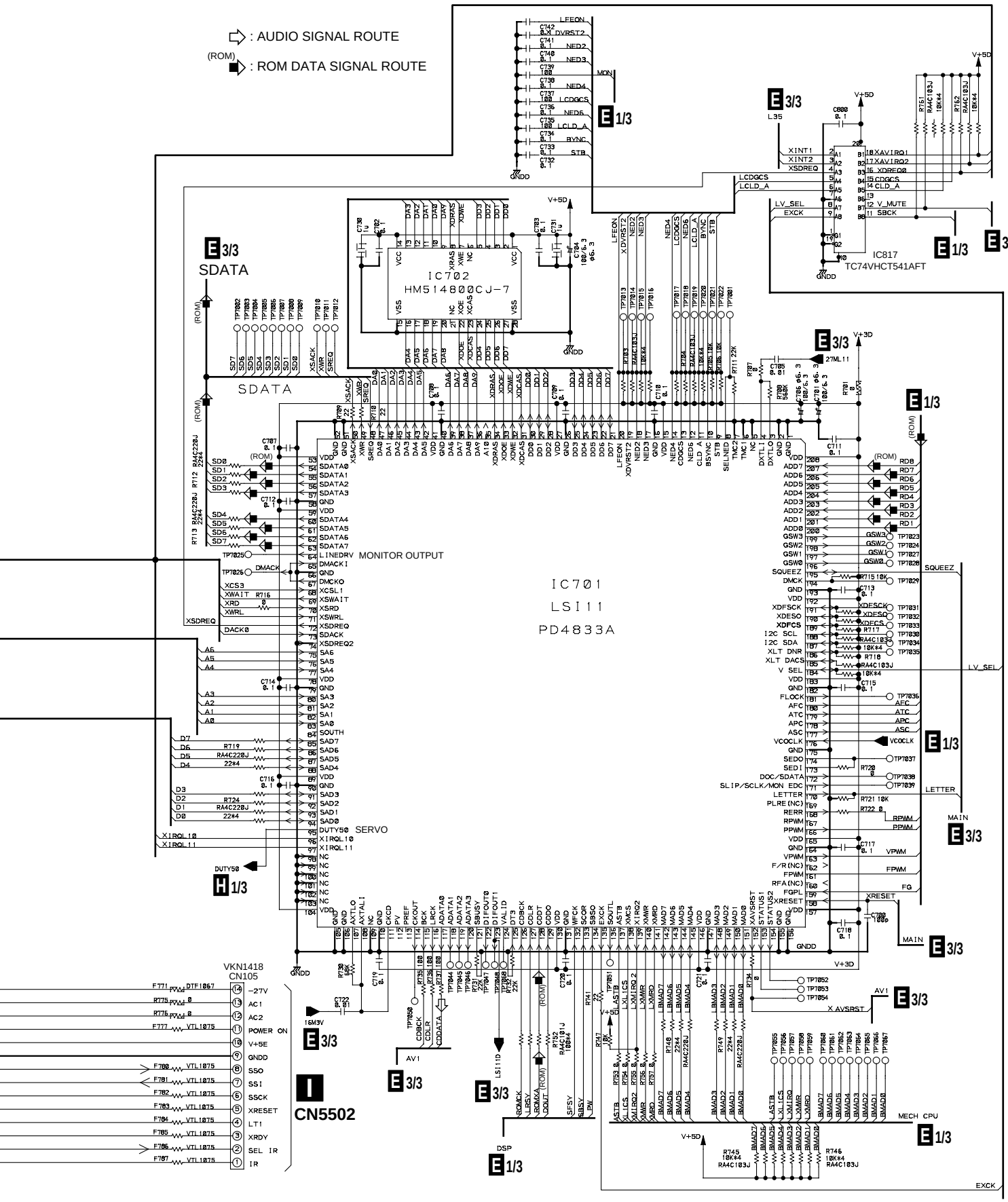
: AUDIO SIGNAL ROUTE
(ROM) : ROM DATA SIGNAL ROUTE
IC702
HM514800CJ-7
IC701
LSI11
PD4833A
IC817
TC74VHCT541AFT
SDATA
MONITOR OUTPUT
SERVO
VKN1418
CN105
CN5502
DSP
MECH CPU
E 1/3
E 3/3
H 1/3
I

3.1.5 DVDM ASSY (3/3)

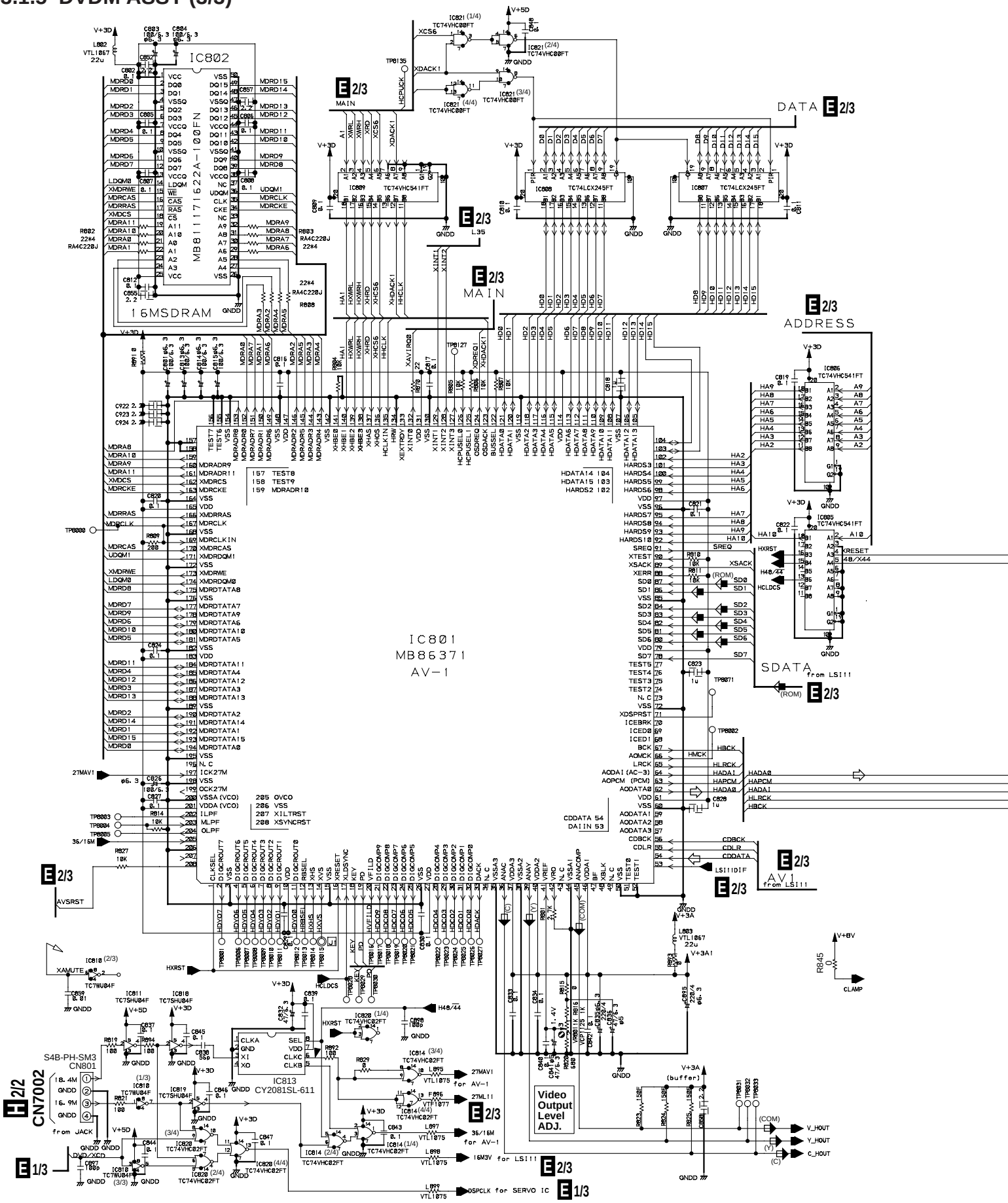

E 3/3 DVDM ASSY(3/3) (VWS1364)

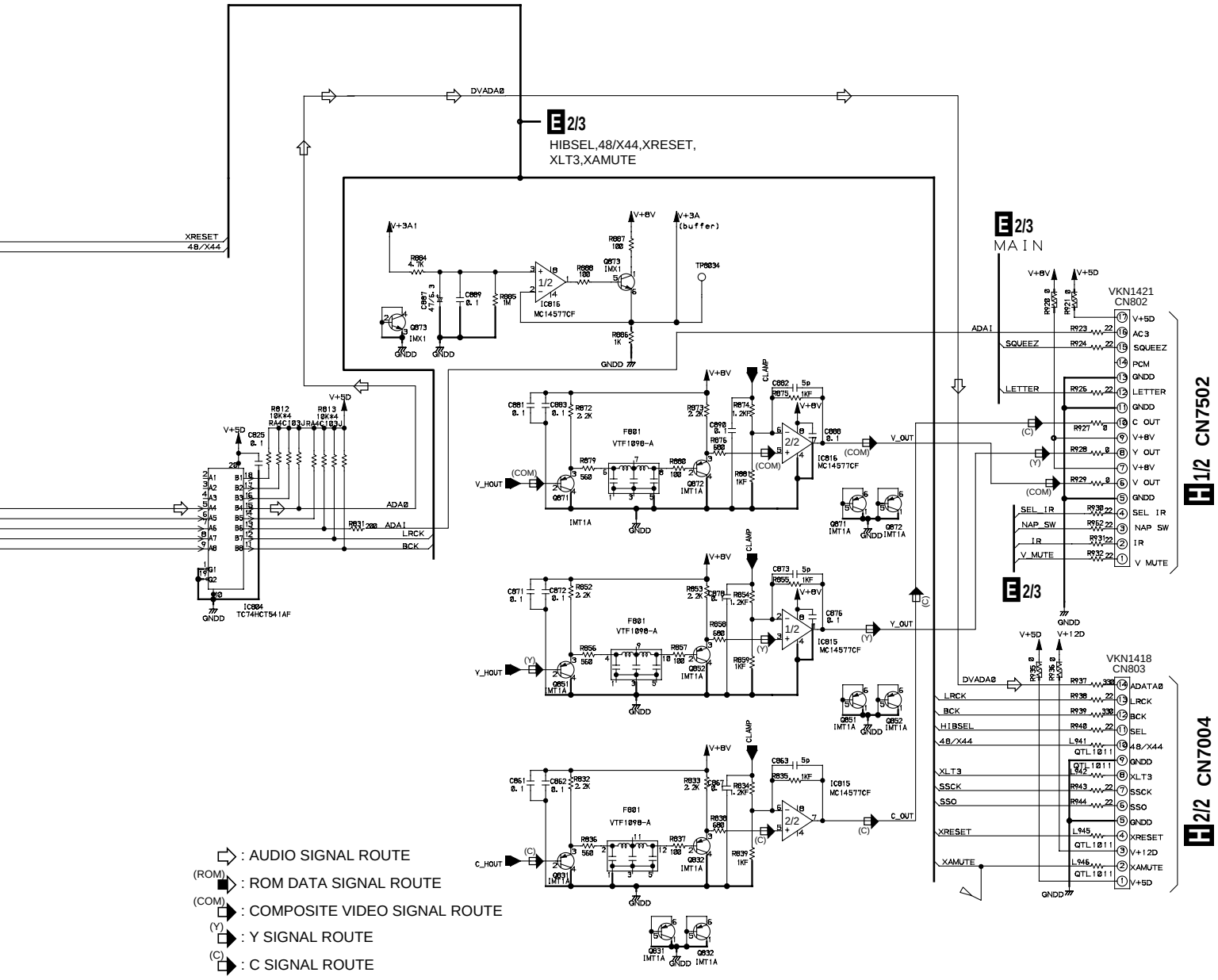

3.1.6 FM/AM TUNER MODULE

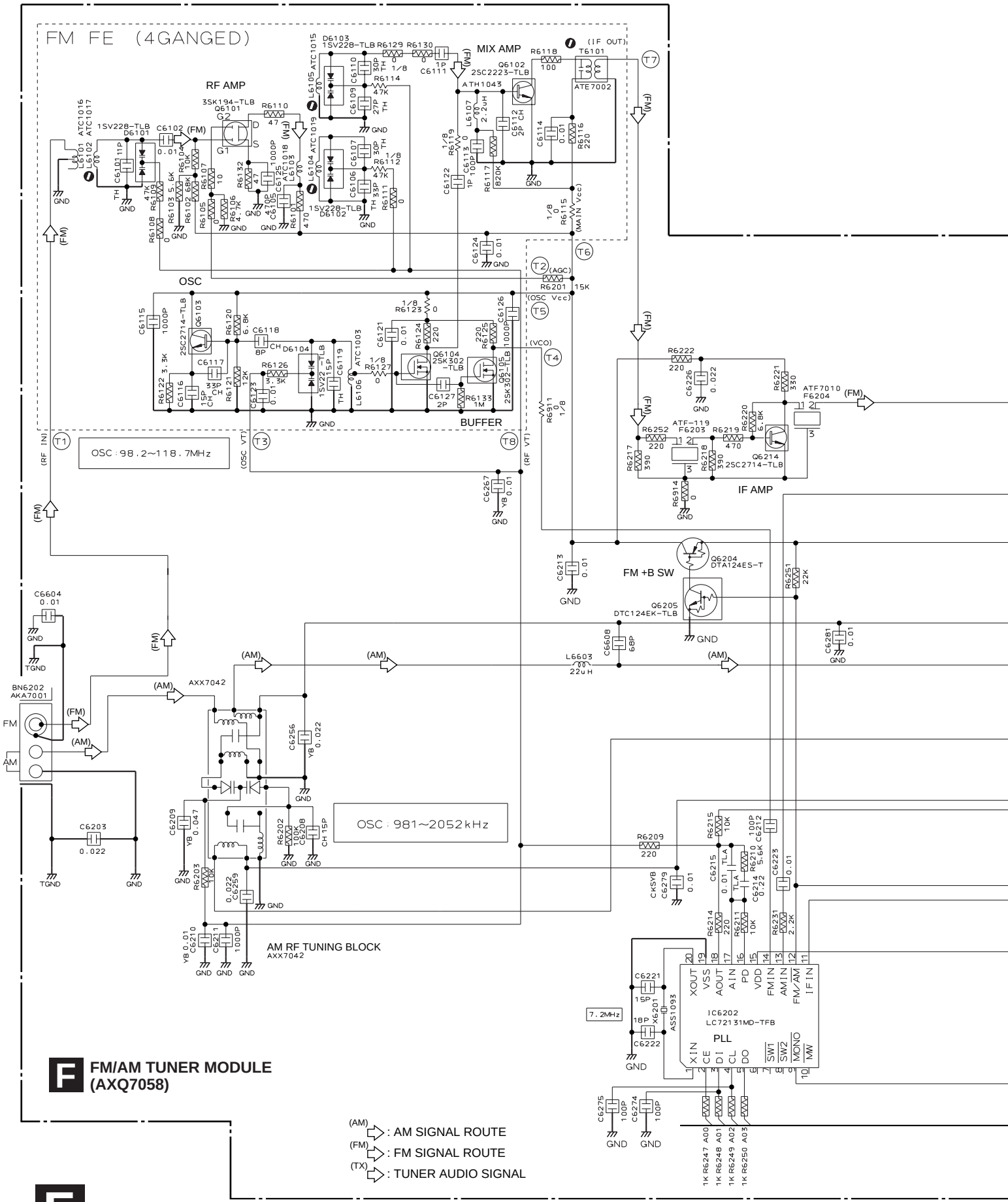

Notes

1. RESISTORS
   Indicated in Ω, 1/10W±5% Tolerance unless otherwise noted K:KΩ, M:MΩ.
2. CAPACITORS
   Indicated in Capacity(μF)/VOLTAGE(V) unless otherwise noted P:PF.
3. DIODES
   No mark diode is 1SS254.

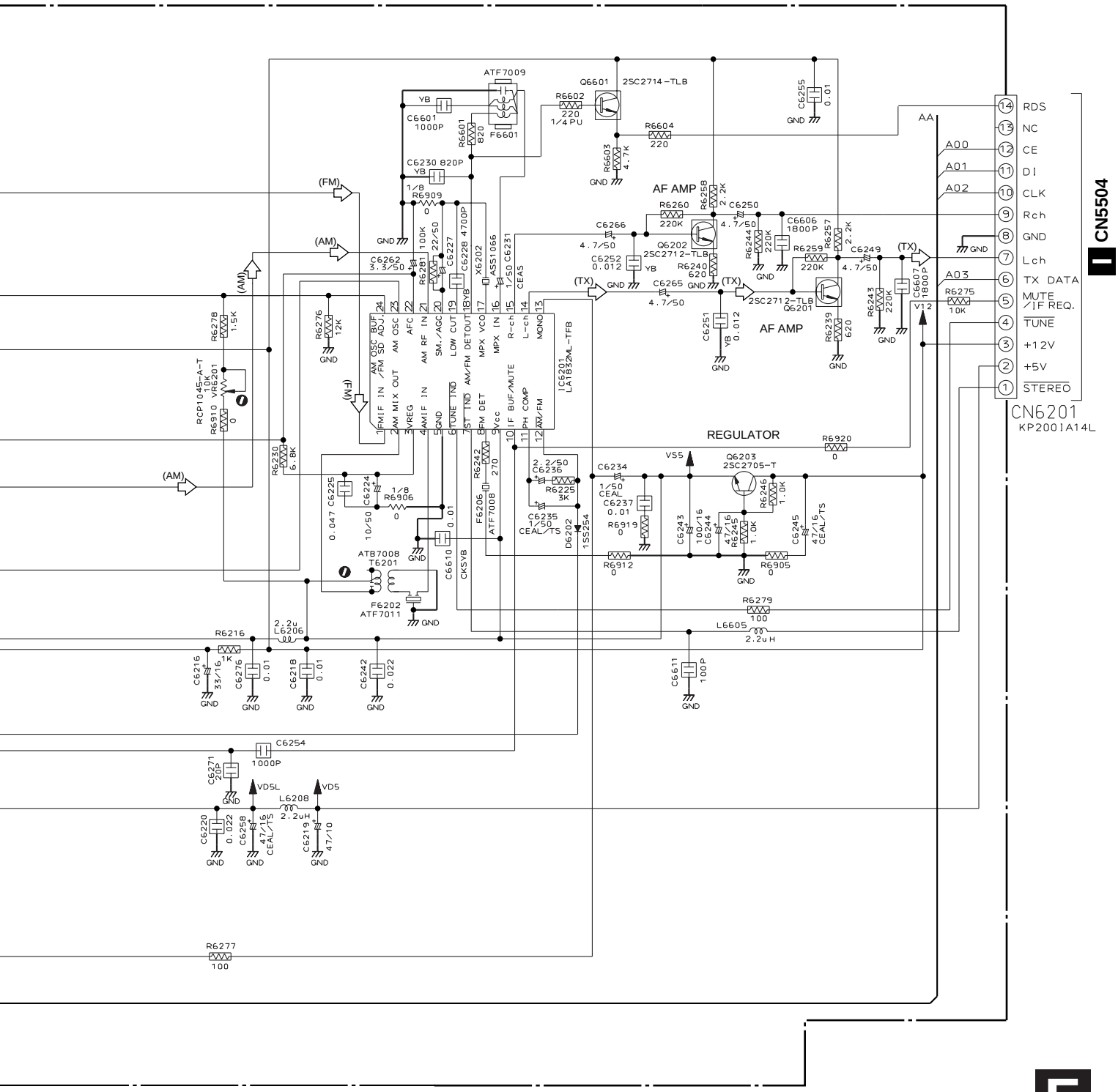

3.1.7 VIDEO ASSY and SVIDEO ASSY (1/2)

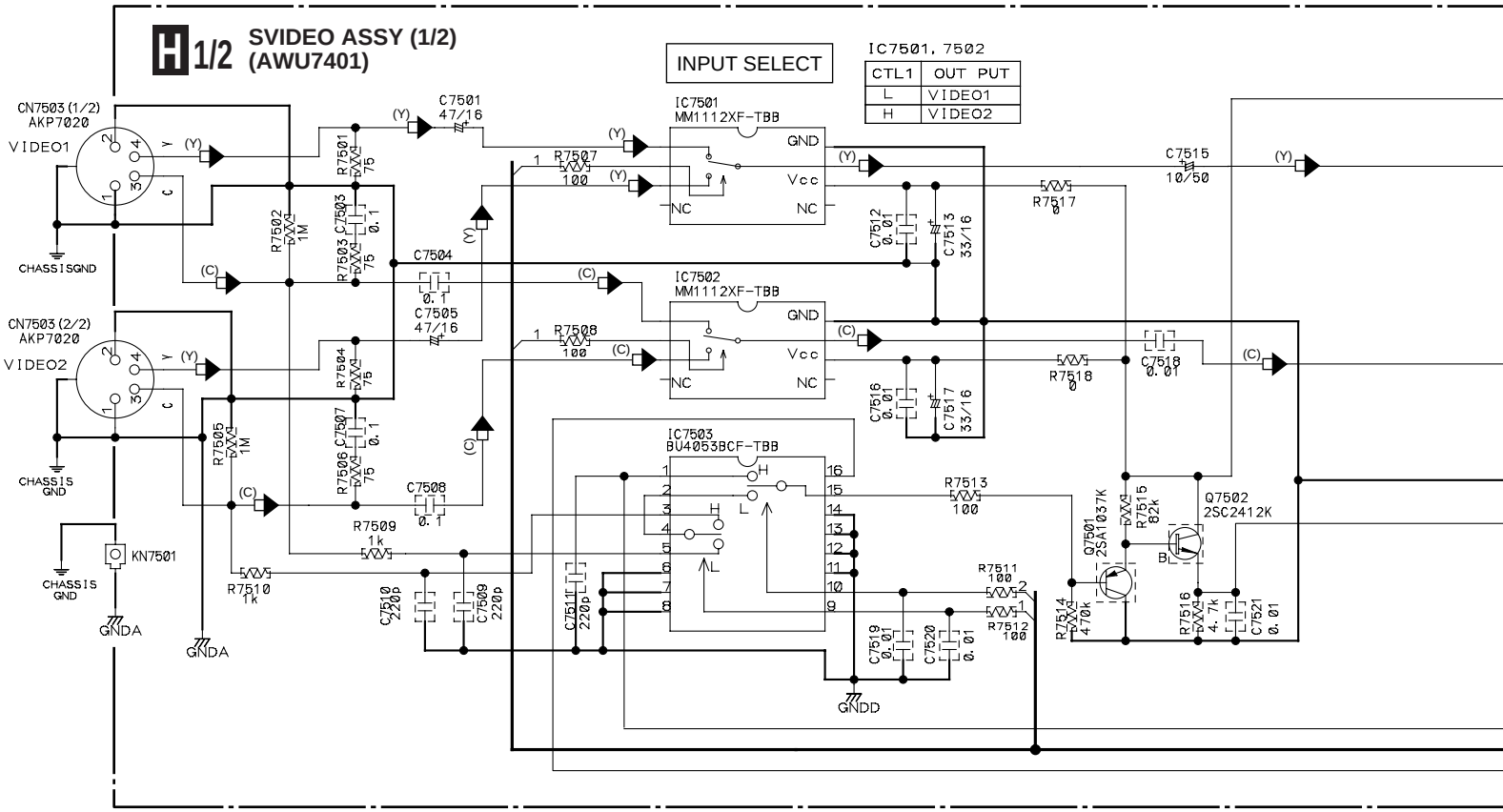

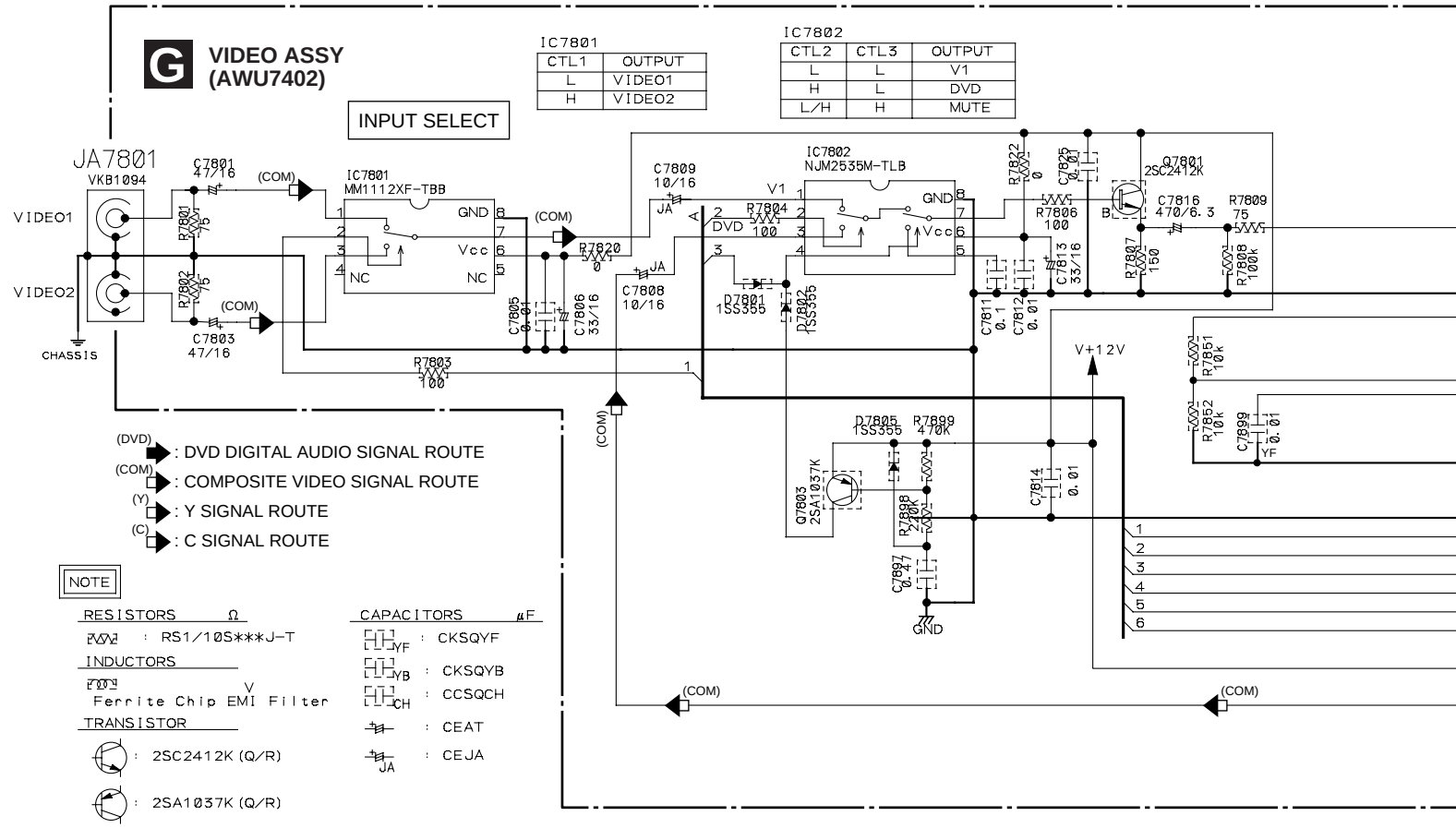

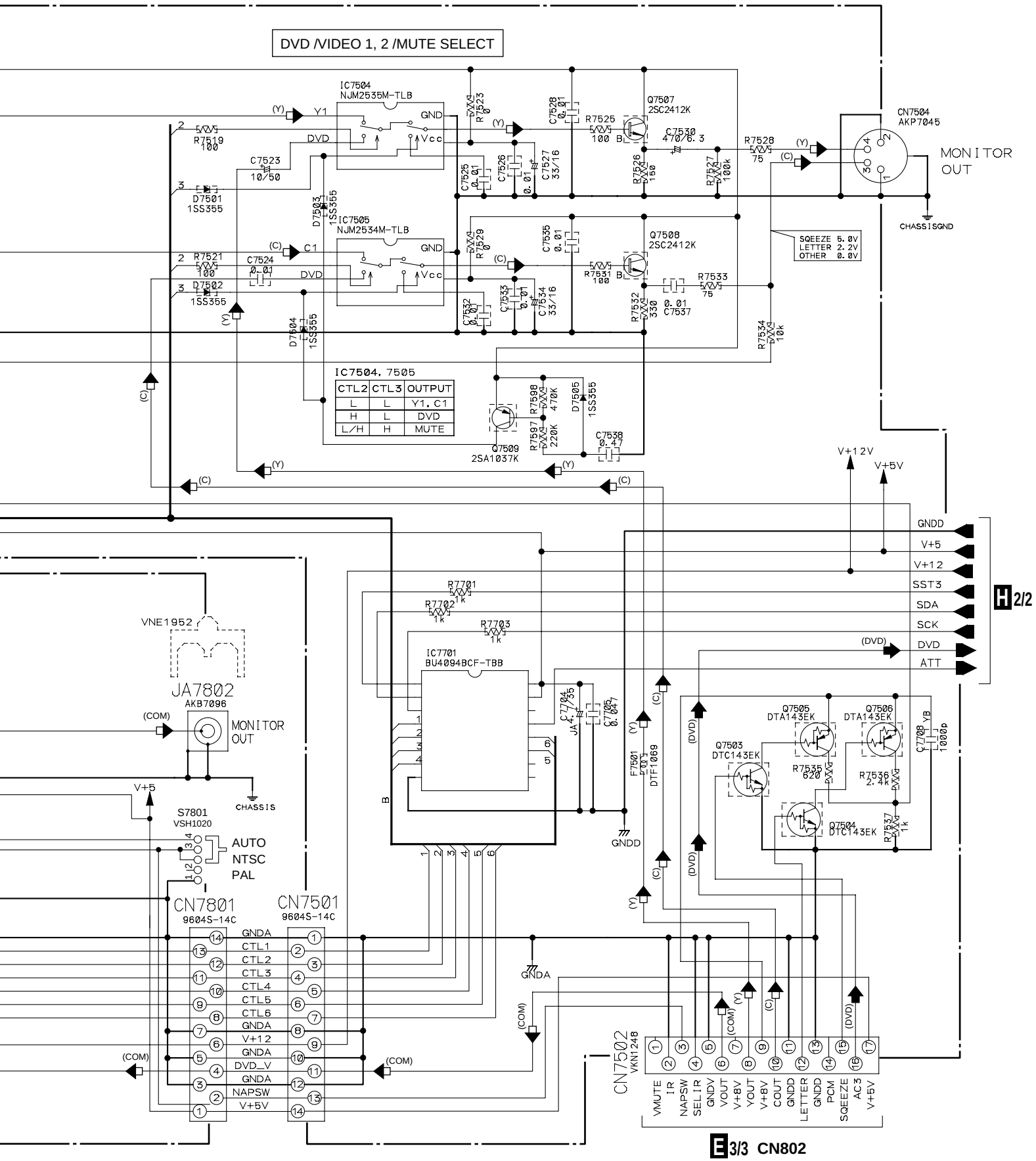
DVD /VIDEO 1, 2 /MUTE SELECT
IC7504
NJM2535M-TLB
IC7505
NJM2534M-TLB
Q7507
2SC2412K
Q7508
2SC2412K
CN7504
AKP7045
MONITOR OUT
CHASSISGND
SQEEZE 5.0V
LETTER 2.2V
OTHER 0.0V
IC7504, 7505
CTL2 CTL3 OUTPUT
L L Y1, C1
H L DVD
L/H H MUTE
Q7509
2SA1037K
V+12V
V+5V
GNDD
V+5
V+12
SST3
SDA
SCK
DVD
ATT
H 2/2
VNE1952
JA7802
AKB7096
MONITOR OUT
CHASSIS
S7801
VSH1020
AUTO
NTSC
PAL
IC7701
BU4094BCF-TBB
Q7505
DTA143EK
Q7506
DTA143EK
Q7503
DTC143EK
Q7504
DTC143EK
CN7801
9604S-14C
CN7501
9604S-14C
GNDA
CTL1
CTL2
CTL3
CTL4
CTL5
CTL6
V+12
DVD_V
NAPSW
V+5V
CN7502
VKN1248
VMUTE
IR
NAPSW
SELIR
GNDV
VOUT
V+8V
COUT
LETTER
PCM
SQEEZE
AC3
E 3/3 CN802

3.1.8 SVIDEO ASSY (2/2)

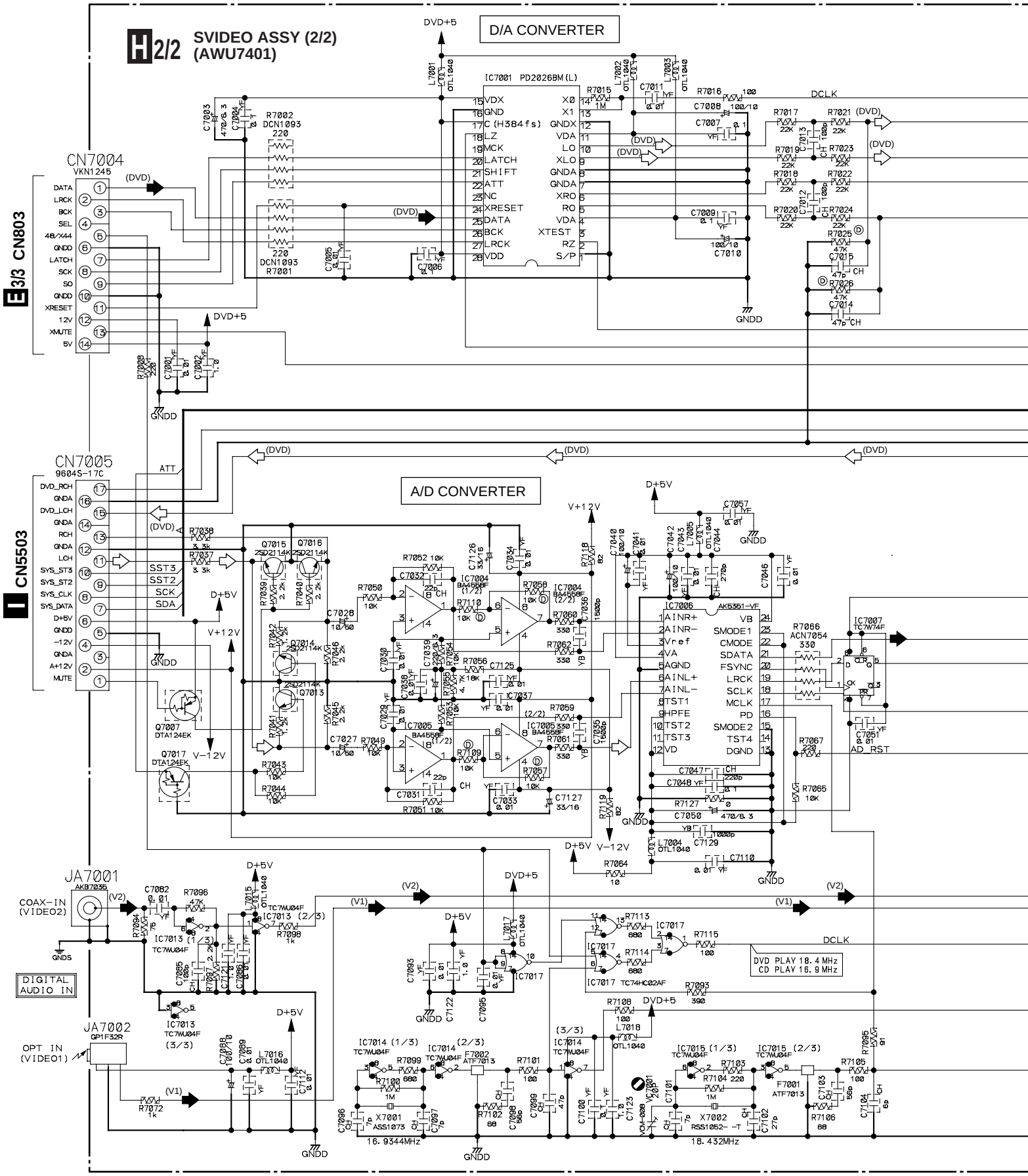

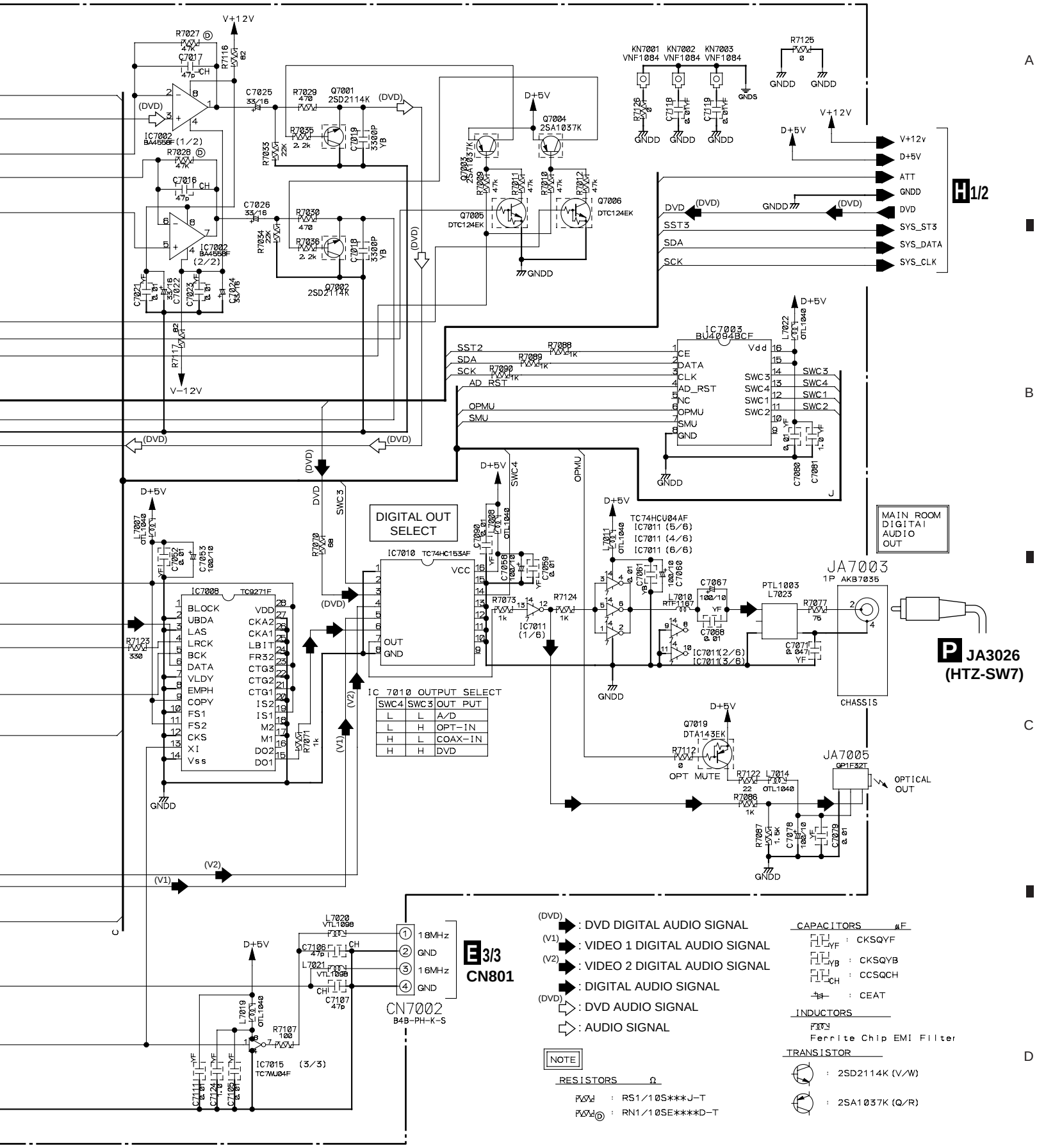
H 1/2
V+12V
V-12V
D+5V
GNDD
(DVD)
(V1)
(V2)
IC7002 BA4558F (1/2)
IC7002 BA4558F (2/2)
Q7001 2SD2114K
Q7002 2SD2114K
Q7003 2SA1037K
Q7004 2SA1037K
Q7005 DTC124EK
Q7006 DTC124EK
KN7001 VNF1084
KN7002 VNF1084
KN7003 VNF1084
V+12v
D+5V
ATT
GNDD
DVD
SYS_ST3
SYS_DATA
SYS_CLK
SST3
SDA
SCK
IC7003 BU4094BCF
SST2
AD_RST
OPMU
SMU
DIGITAL OUT SELECT
IC7010 TC74HC153AF
IC7008 TC9271F
BLOCK
UBDA
LAS
LRCK
BCK
DATA
VLDY
EMPH
COPY
FS1
FS2
CKS
XI
Vss
VDD
CKA2
CKA1
LBIT
FR32
CTG3
CTG2
CTG1
IS2
IS1
M2
M1
DO2
DO1
IC 7010 OUTPUT SELECT
SWC4 SWC3 OUT PUT
L L A/D
L H OPT-IN
H L COAX-IN
H H DVD
TC74HCU04AF
IC7011 (5/6)
IC7011 (4/6)
IC7011 (6/6)
IC7011 (1/6)
IC7011(2/6)
IC7011(3/6)
PTL1003 L7023
JA7003 1P AKB7035
CHASSIS
MAIN ROOM DIGITAI AUDIO OUT
P JA3026 (HTZ-SW7)
Q7019 DTA143EK
OPT MUTE
JA7005 GP1F32T
OPTICAL OUT
E 3/3 CN801
CN7002 B4B-PH-K-S
18MHz
16MHz
IC7015 TC7MU04F (3/3)
(DVD) : DVD DIGITAL AUDIO SIGNAL
(V1) : VIDEO 1 DIGITAL AUDIO SIGNAL
(V2) : VIDEO 2 DIGITAL AUDIO SIGNAL
: DIGITAL AUDIO SIGNAL
(DVD) : DVD AUDIO SIGNAL
: AUDIO SIGNAL
NOTE
RESISTORS Ω
RS1/10S***J-T
RN1/10SE****D-T
CAPACITORS μF
CKSQYF
CKSQYB
CCSQCH
CEAT
INDUCTORS
Ferrite Chip EMI Filter
TRANSISTOR
2SD2114K (V/W)
2SA1037K (Q/R)

3.1.9 MOTHER ASSY

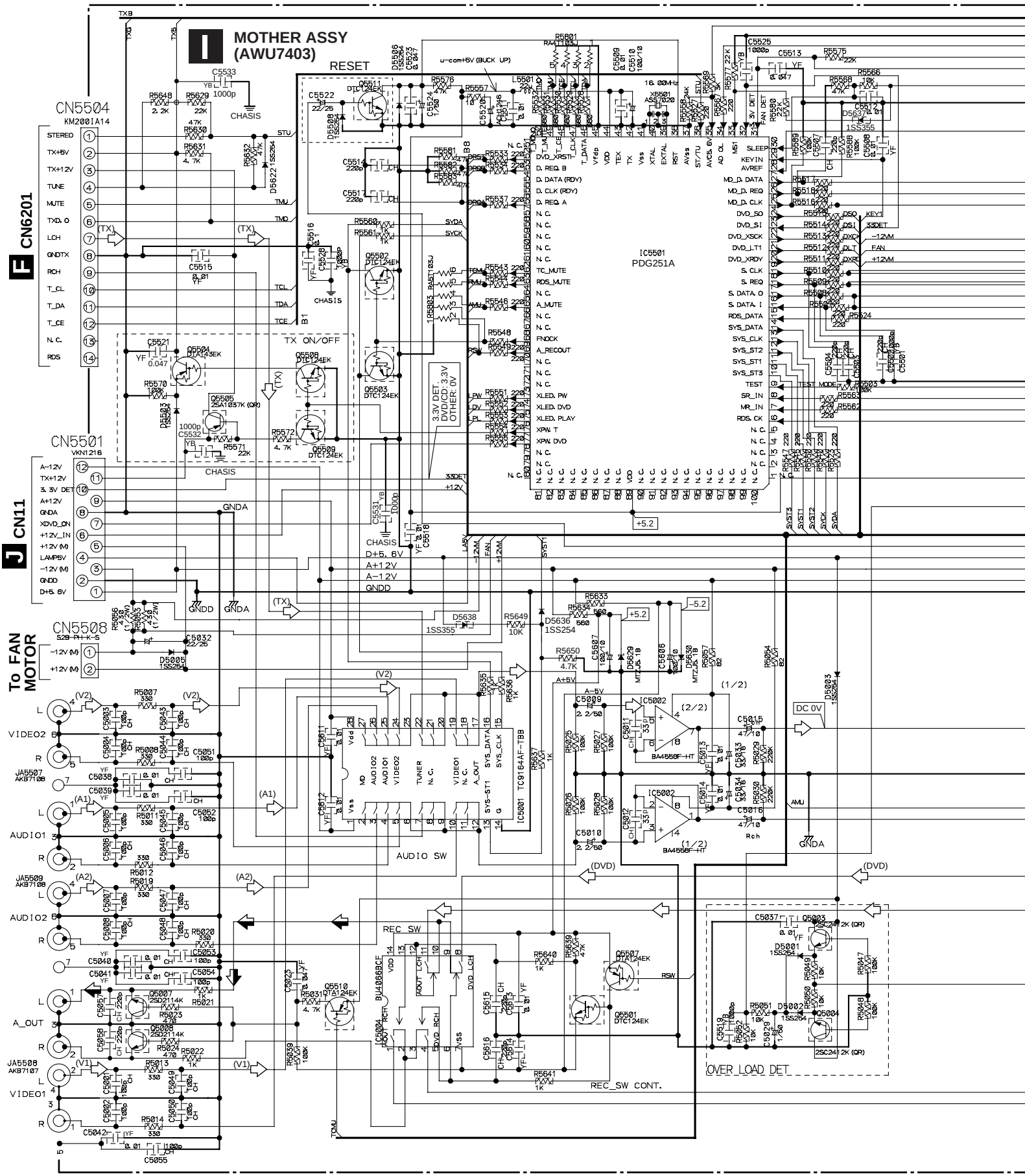

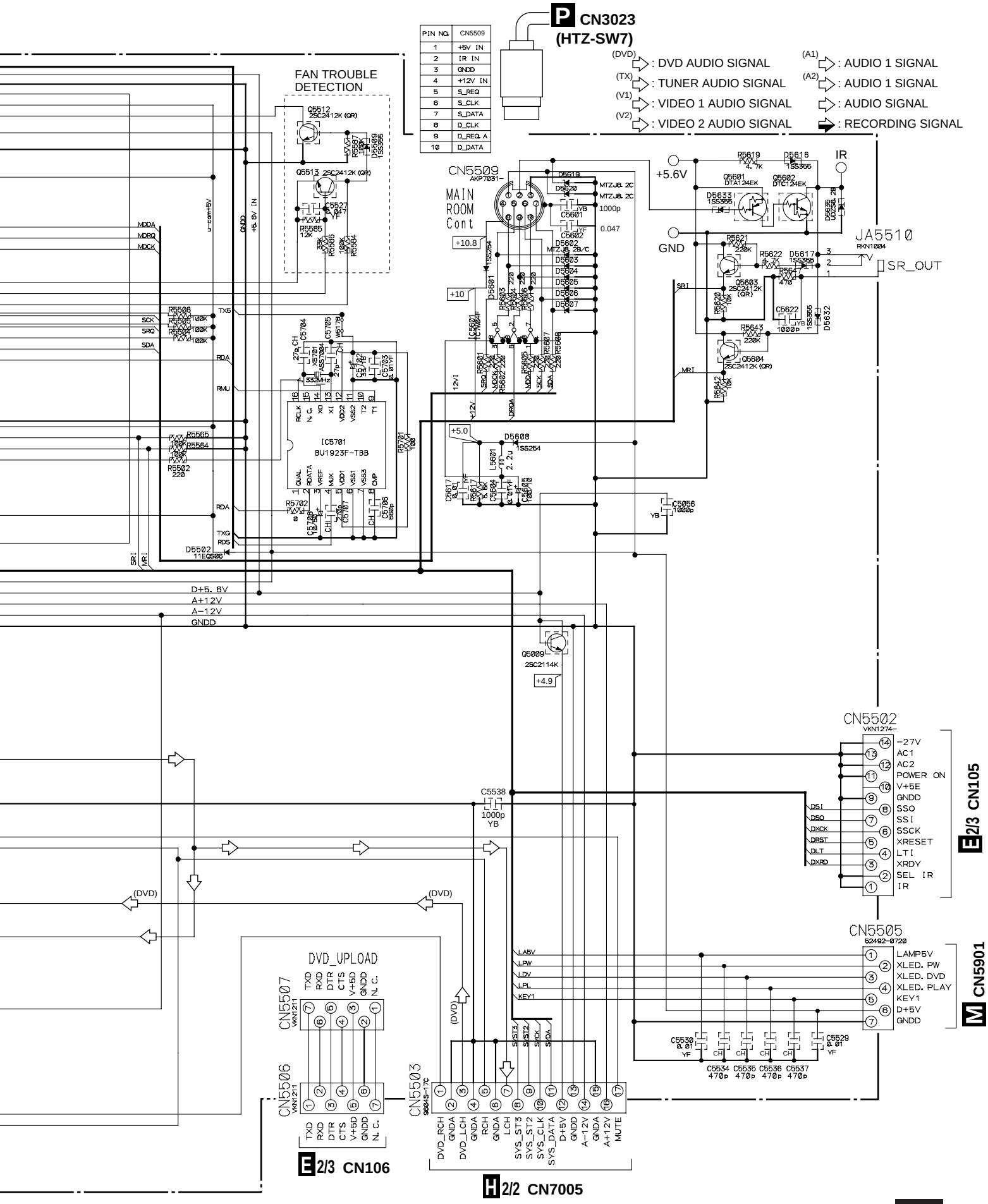
P CN3023
(HTZ-SW7)
PIN NO. CN5509
1 +5V IN
2 IR IN
3 GNDD
4 +12V IN
5 S_REQ
6 S_CLK
7 S_DATA
8 D_CLK
9 D_REQ A
10 D_DATA
(DVD) : DVD AUDIO SIGNAL
(TX) : TUNER AUDIO SIGNAL
(V1) : VIDEO 1 AUDIO SIGNAL
(V2) : VIDEO 2 AUDIO SIGNAL
(A1) : AUDIO 1 SIGNAL
(A2) : AUDIO 1 SIGNAL
: AUDIO SIGNAL
: RECORDING SIGNAL
FAN TROUBLE DETECTION
CN5509
MAIN ROOM Cont
+5.6V
GND
IR
JA5510
SR_OUT
IC5701
BU1923F-TBB
D+5. 6V
A+12V
A-12V
GNDD
CN5502
E 2/3 CN105
CN5505
M CN5901
DVD_UPLOAD
CN5507
CN5506
E 2/3 CN106
CN5503
H 2/2 CN7005

3.1.10 POWER MAIN ASSY, POWER SUB ASSY, AC ASSY, FRONT (1) ASSY, FRONT (2) ASSY and LAMP ASSY

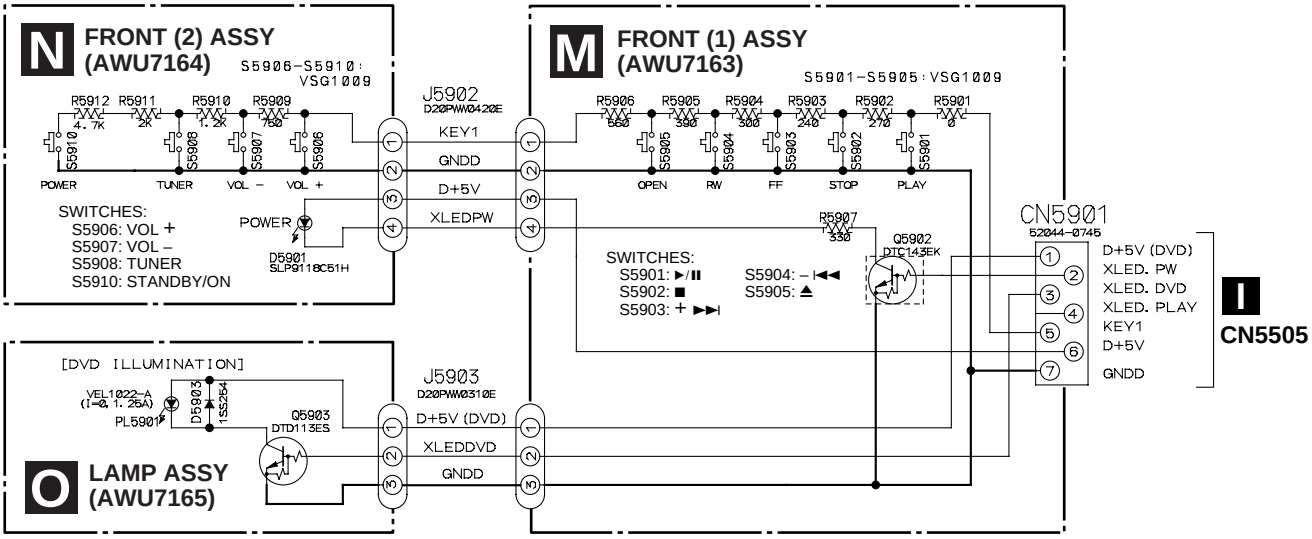

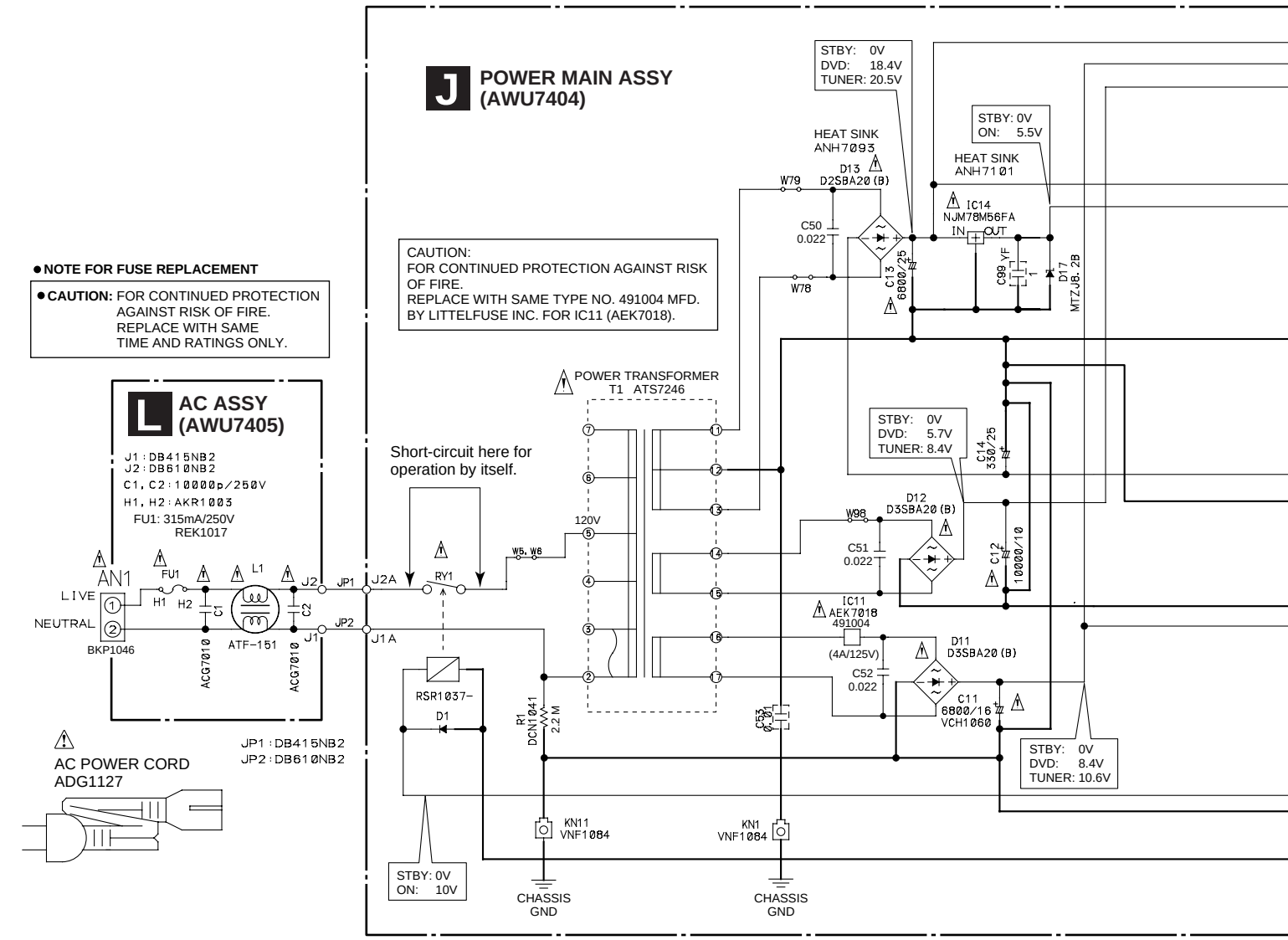

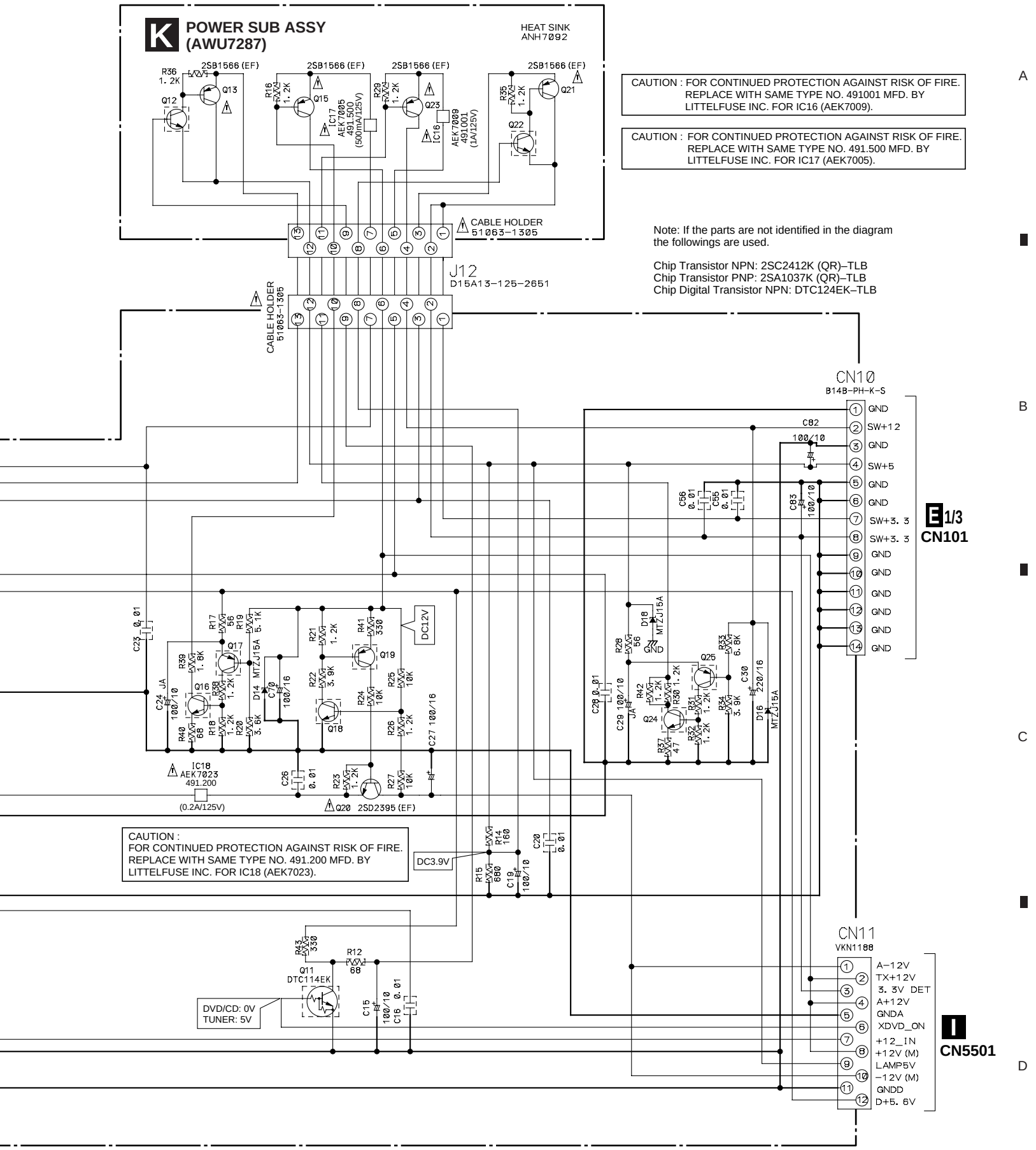

CAUTION : FOR CONTINUED PROTECTION AGAINST RISK OF FIRE. REPLACE WITH SAME TYPE NO. 491001 MFD. BY LITTELFUSE INC. FOR IC16 (AEK7009).

CAUTION : FOR CONTINUED PROTECTION AGAINST RISK OF FIRE. REPLACE WITH SAME TYPE NO. 491.500 MFD. BY LITTELFUSE INC. FOR IC17 (AEK7005).

Note: If the parts are not identified in the diagram the followings are used.

Chip Transistor NPN: 2SC2412K (QR)–TLB
Chip Transistor PNP: 2SA1037K (QR)–TLB
Chip Digital Transistor NPN: DTC124EK–TLB

3.2 POWERED SUBWOOFER (HTZ-SW7)

3.2.1 OVERALL CONNECTION DIAGRAM

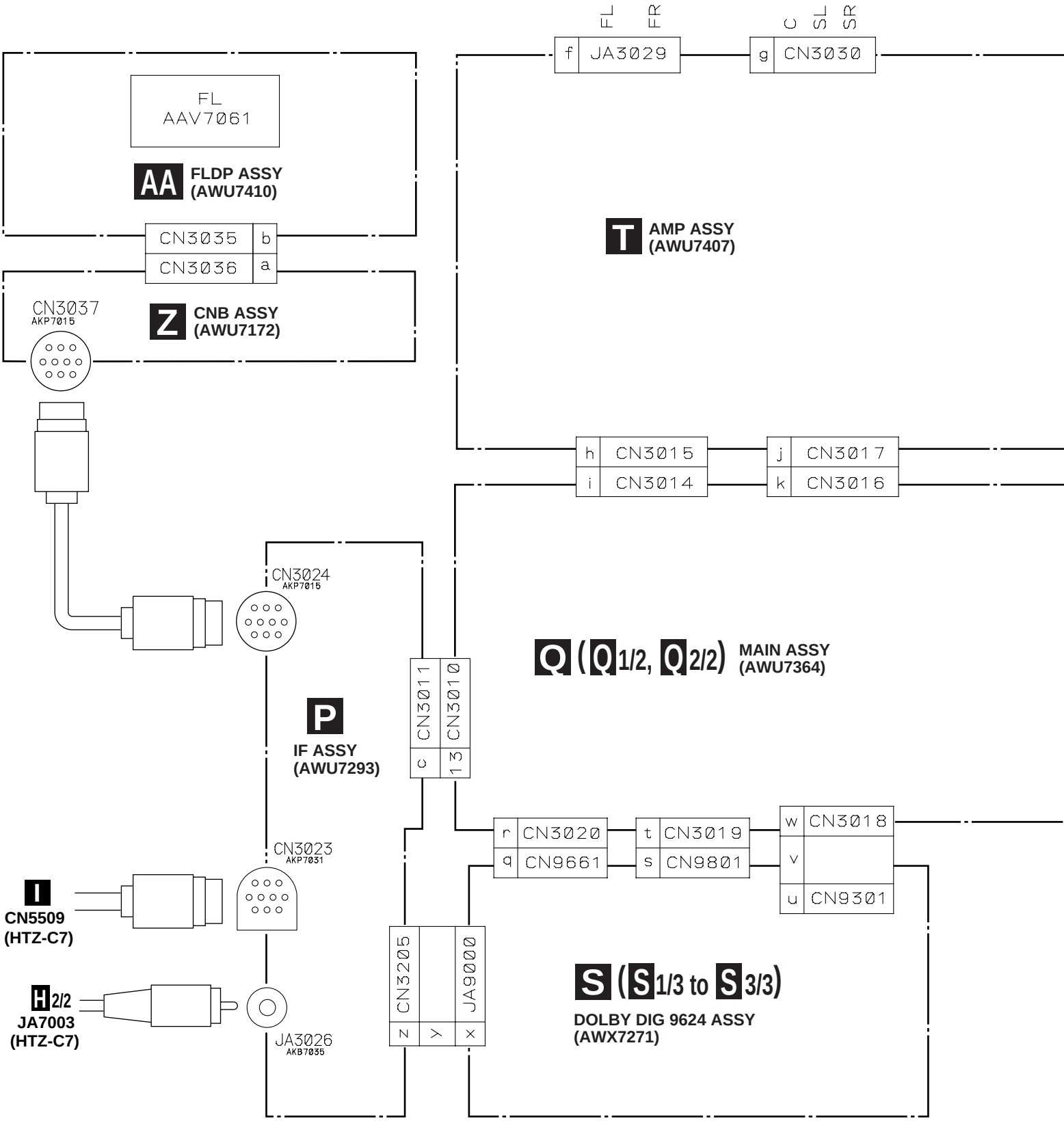

	No.	Part No.		No.	Part No.		No.	Part No.
a	CN3036	KM200TA10	f	JA3029	REK1003	k	CN3016	RKP1784
b	CN3035	KP200TA10	g	CN3030	AKE7020	l	CN3022	KP200IB19L
c	CN3011	KP200TA18L	h	CN3015	KP200IB11L	m	CN3021	KM200IB19
d	J3033	ADE7035	i	CN3014	KM200IB11	n	CN3027	KPD3
e	CN3033	KPE6	j	CN3017	RKP1822	o	J3027	DXUY0310E

	No.	Part No.
p	CN3028	5569-02A1
q	CN9661	KP200IB15L
r	CN3020	KM200IB15
s	CN9801	KP200IB11L
t	CN3019	KM200IB11
u	CN9301	KPE10
v		D15A10-150-2651
w	CN3018	AKP7047
x	JA9000	VKB1077
y		ADE7030
z	CN3025	S2B-EH
1	CN3009	52328-1120

	No.	Part No.
2	J3009	D15A11-200-2651
3	CN3008	KPD12L
4	J3008	DXUY1215E
5	CN3002	52151-0410
6	J3002	D20PYY0425E
7	CN3001	BKP1046
8		
9		
10	J3005	DB114NB2
11		
12	J3007	DB016NB2
13	CN3010	KM200TA18

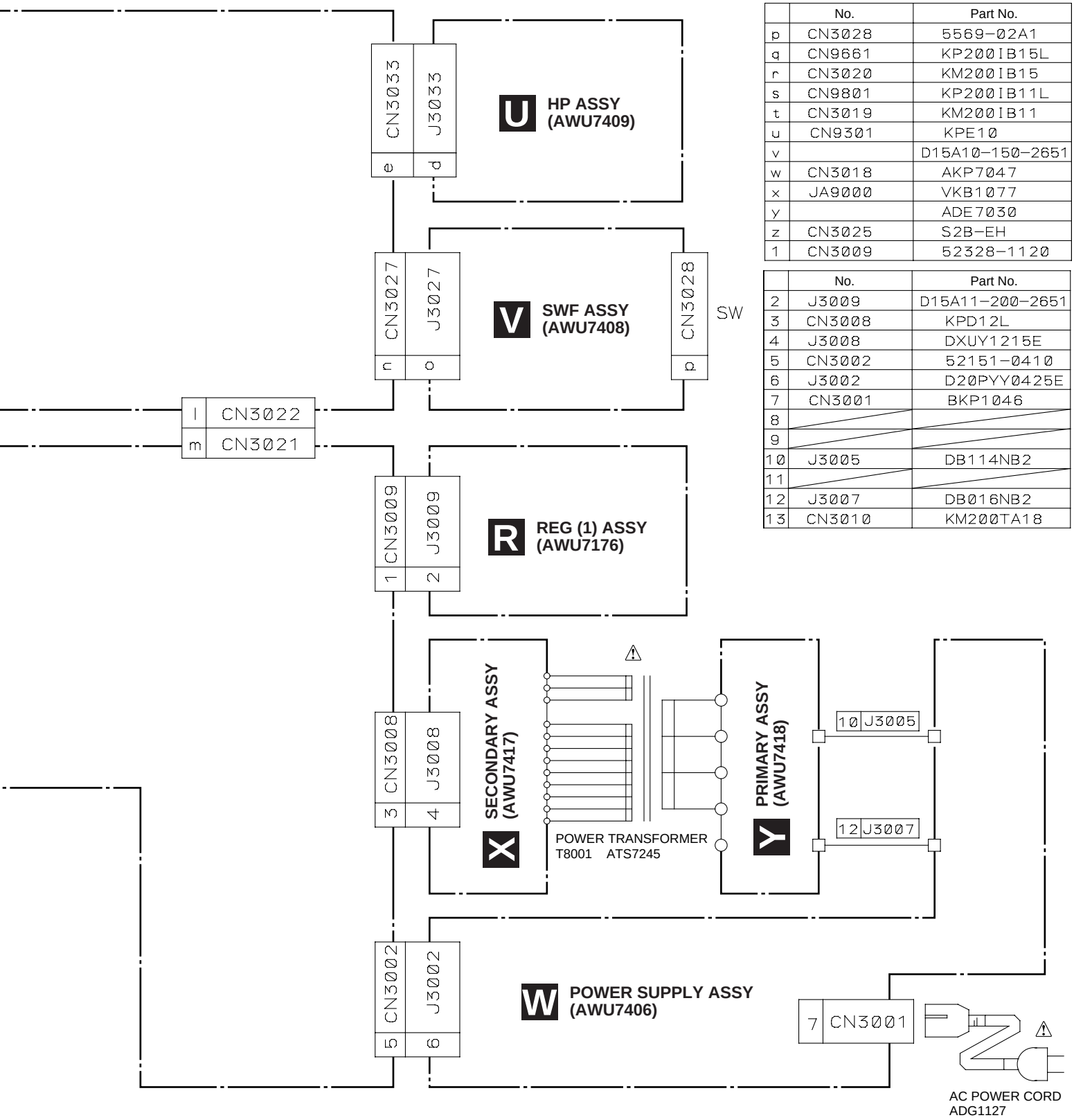

3.2.2 IF ASSY, MAIN ASSY (1/2) and REG (1) ASSY

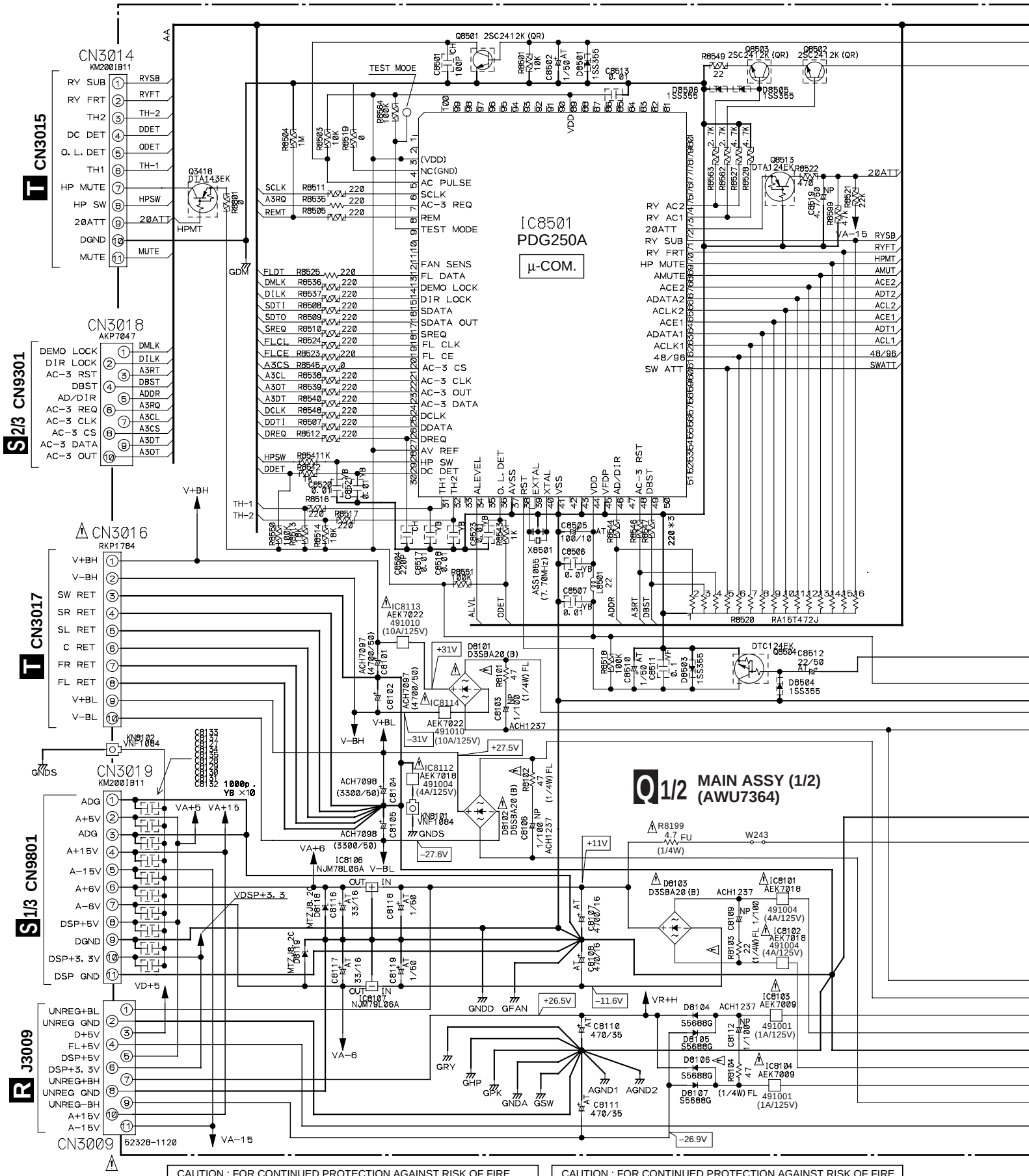

CAUTION : FOR CONTINUED PROTECTION AGAINST RISK OF FIRE. REPLACE WITH SAME TYPE NO. 491004 MFD. BY LITTELFUSE INC. FOR IC8101, IC8102 and IC8112 (AEK7018).

CAUTION : FOR CONTINUED PROTECTION AGAINST RISK OF FIRE. REPLACE WITH SAME TYPE NO. 491001 MFD. BY LITTELFUSE INC. FOR IC8103 and IC8104 (AEK7009).

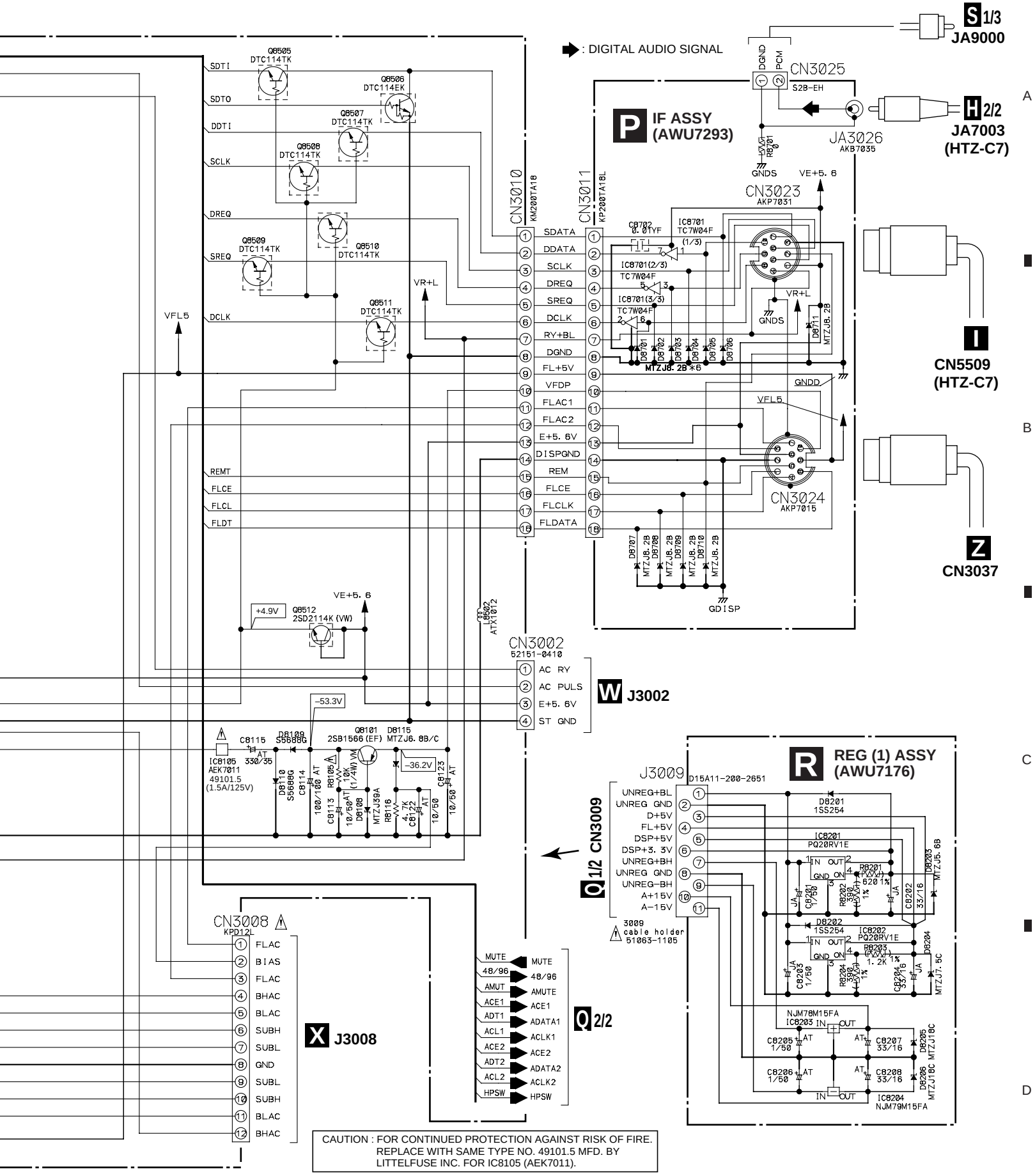

CAUTION : FOR CONTINUED PROTECTION AGAINST RISK OF FIRE. REPLACE WITH SAME TYPE NO. 49101.5 MFD. BY LITTELFUSE INC. FOR IC8105 (AEK7011).

CAUTION : FOR CONTINUED PROTECTION AGAINST RISK OF FIRE. REPLACE WITH SAME TYPE NO. 491010 MFD. BY LITTELFUSE INC. FOR IC8113 and IC8114 (AEK7022).

3.2.3 MAIN ASSY (2/2)

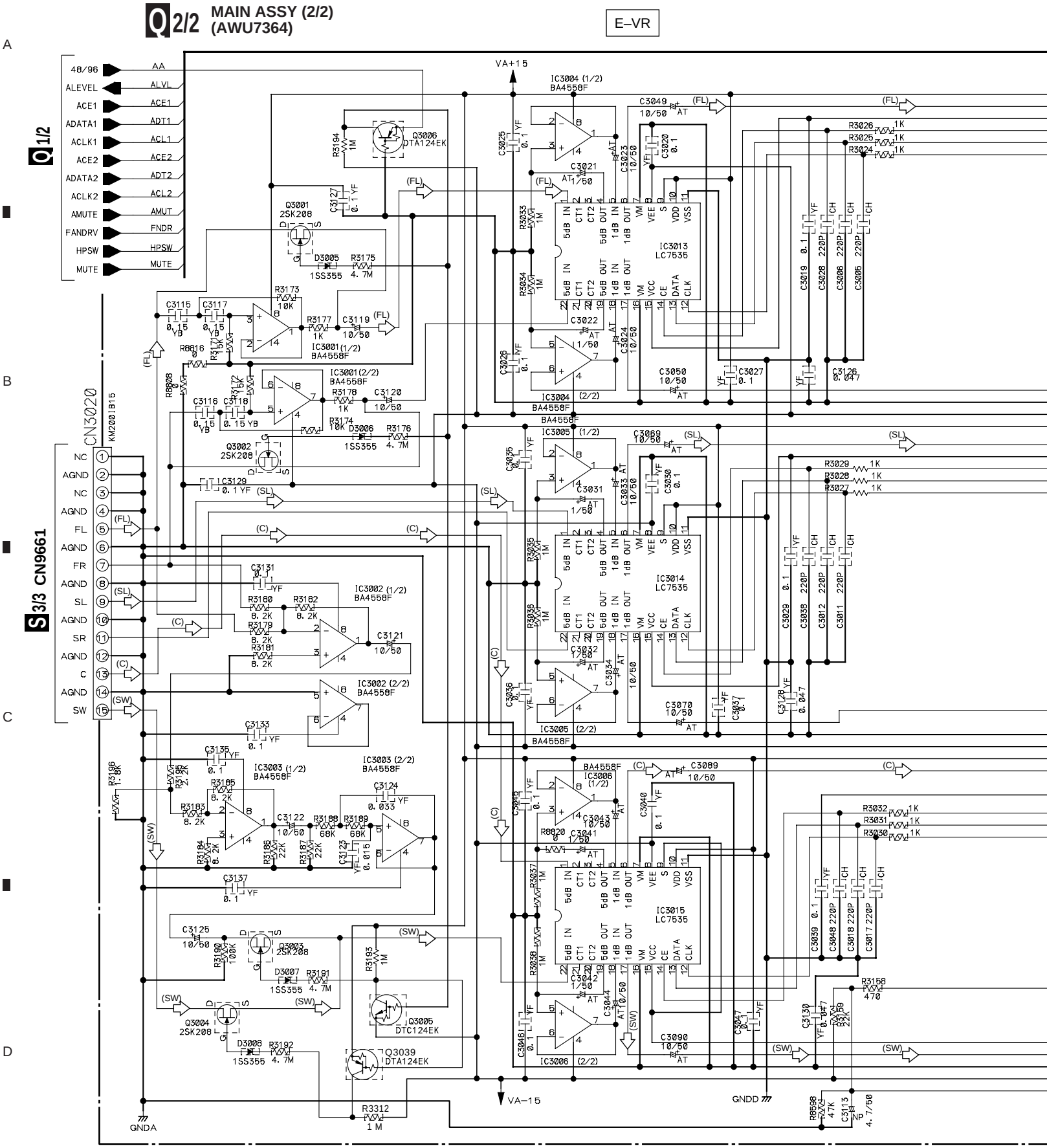

CAUTION : FOR CONTINUED PROTECTION AGAINST RISK OF FIRE. REPLACE WITH SAME TYPE NO. 491002 MFD. BY LITTELFUSE INC. FOR IC8111 (AEK7013).

CAUTION : FOR CONTINUED PROTECTION AGAINST RISK OF FIRE. REPLACE WITH SAME TYPE NO. 49101.5 MFD. BY LITTELFUSE INC. FOR IC8110 (AEK7011).

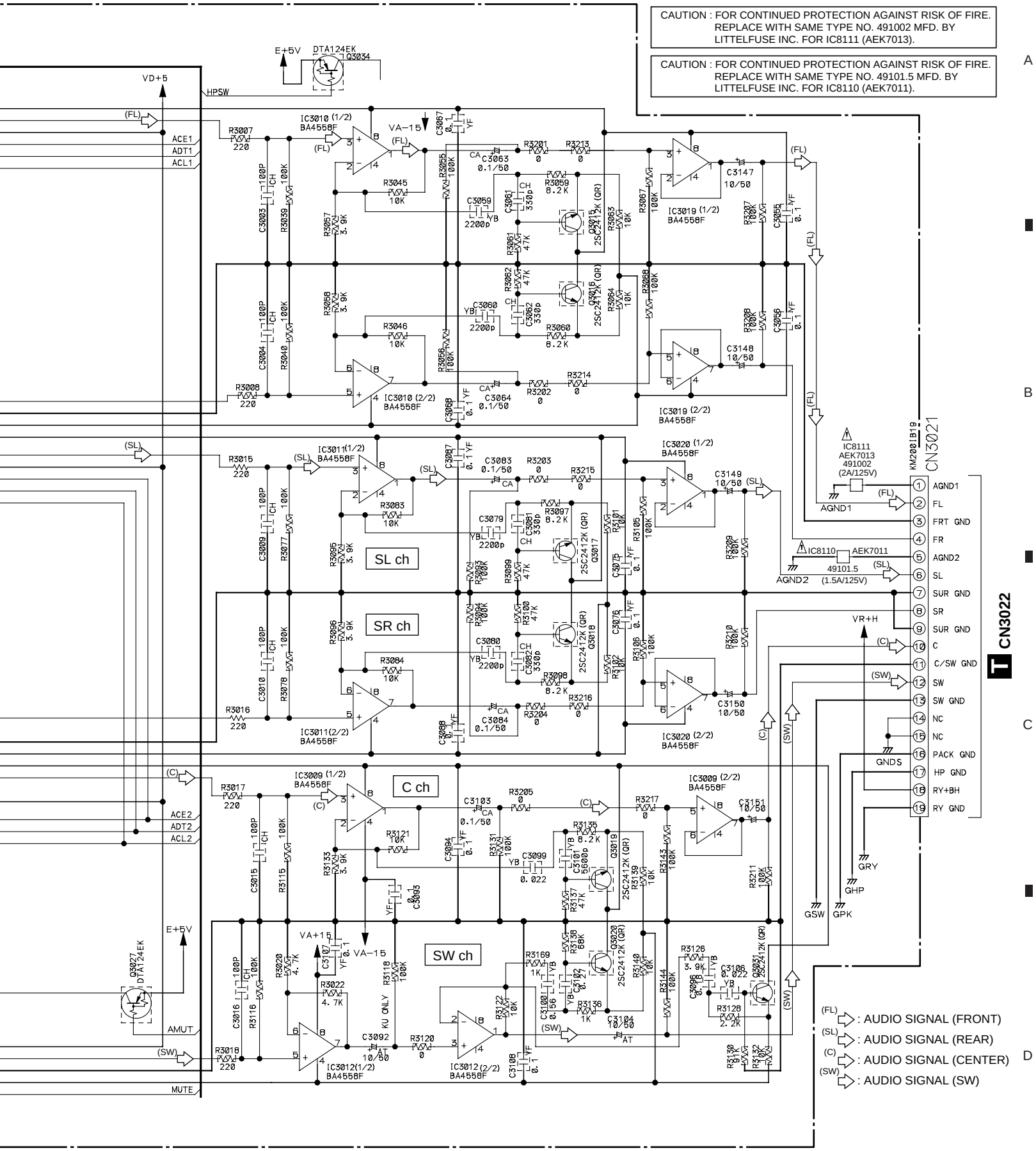

3.2.4 DOLBY DIG 9624 ASSY (1/3)

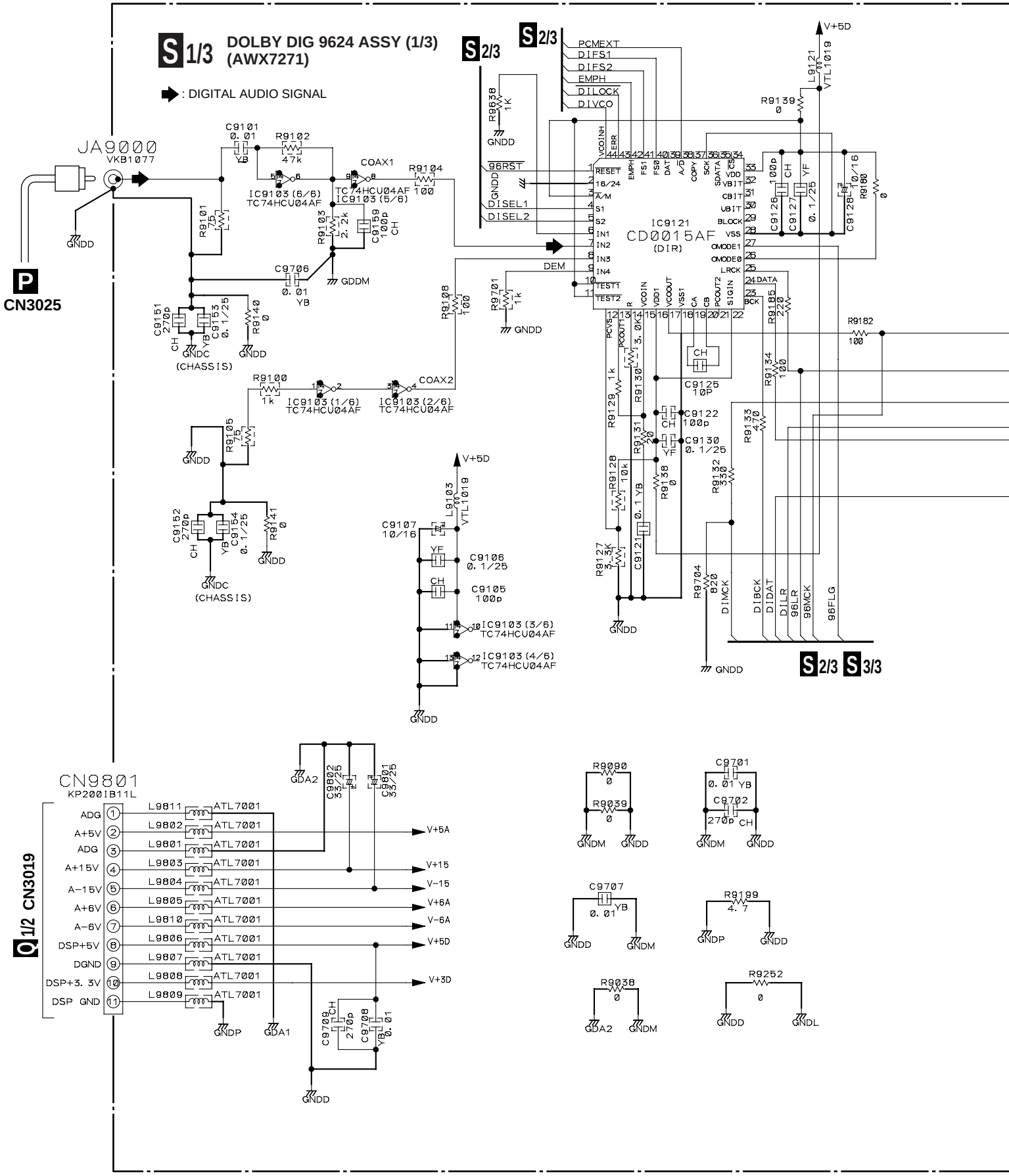

NOTE

1. RESISTORS

Unit: k:kΩ ,M:MΩ or Ω unless otherwise noted.
Rated power: 1/10W unless otherwise noted.
Tolerance: (J)±5% unless otherwise noted.

2. CAPACITORS

Unit: p:pF or μF unless otherwise noted.
Ratings: Capacity(μF)/Voltage(V) unless otherwise noted.
Rated Voltage: 50V expect for electrolytic capcitors.

CH.....CCSQCH
YF.....CKSQYF
YB.....CKSQYB
⏚.....CEV

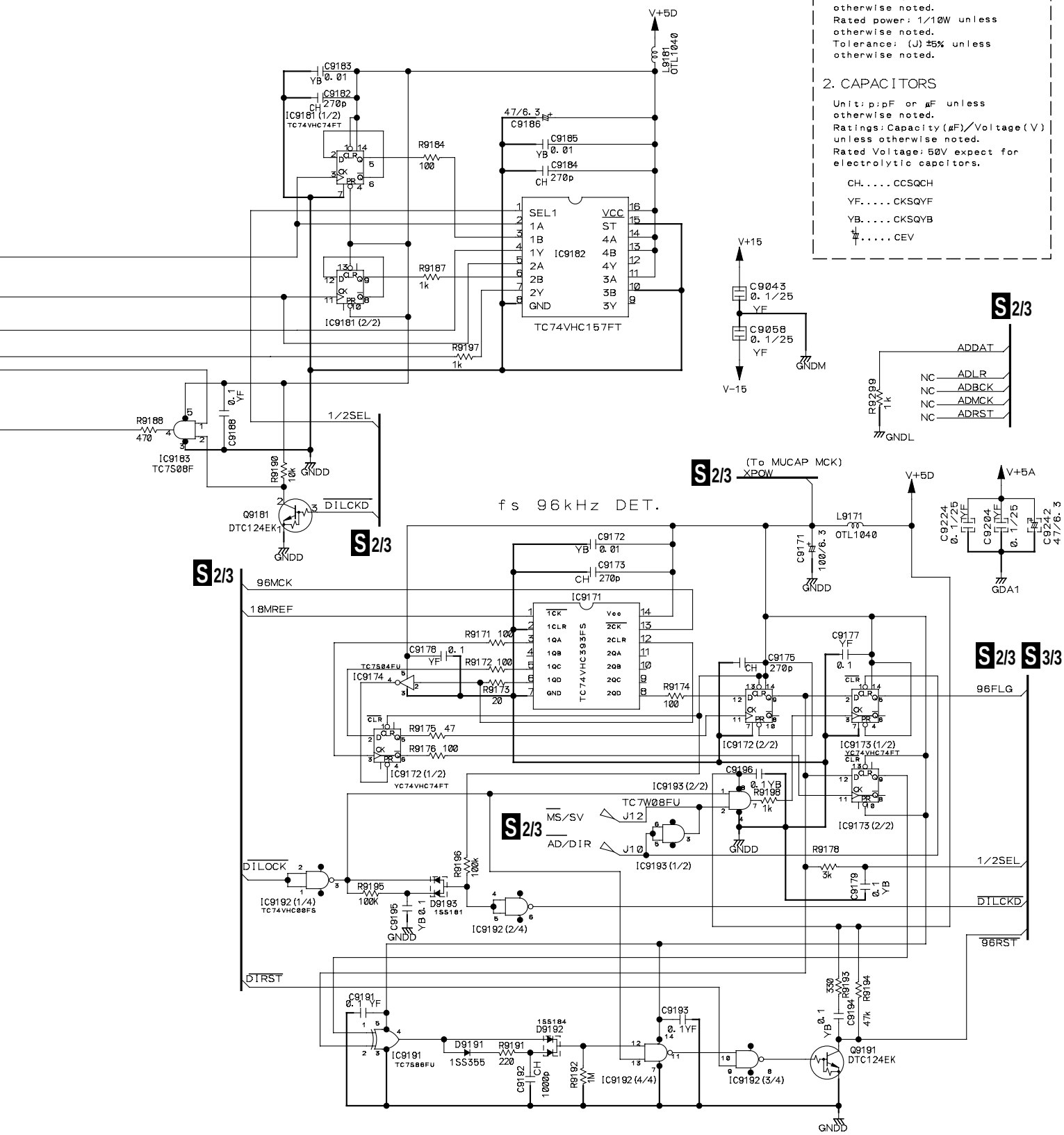

3.2.5 DOLBY DIG 9624 ASSY (2/3)

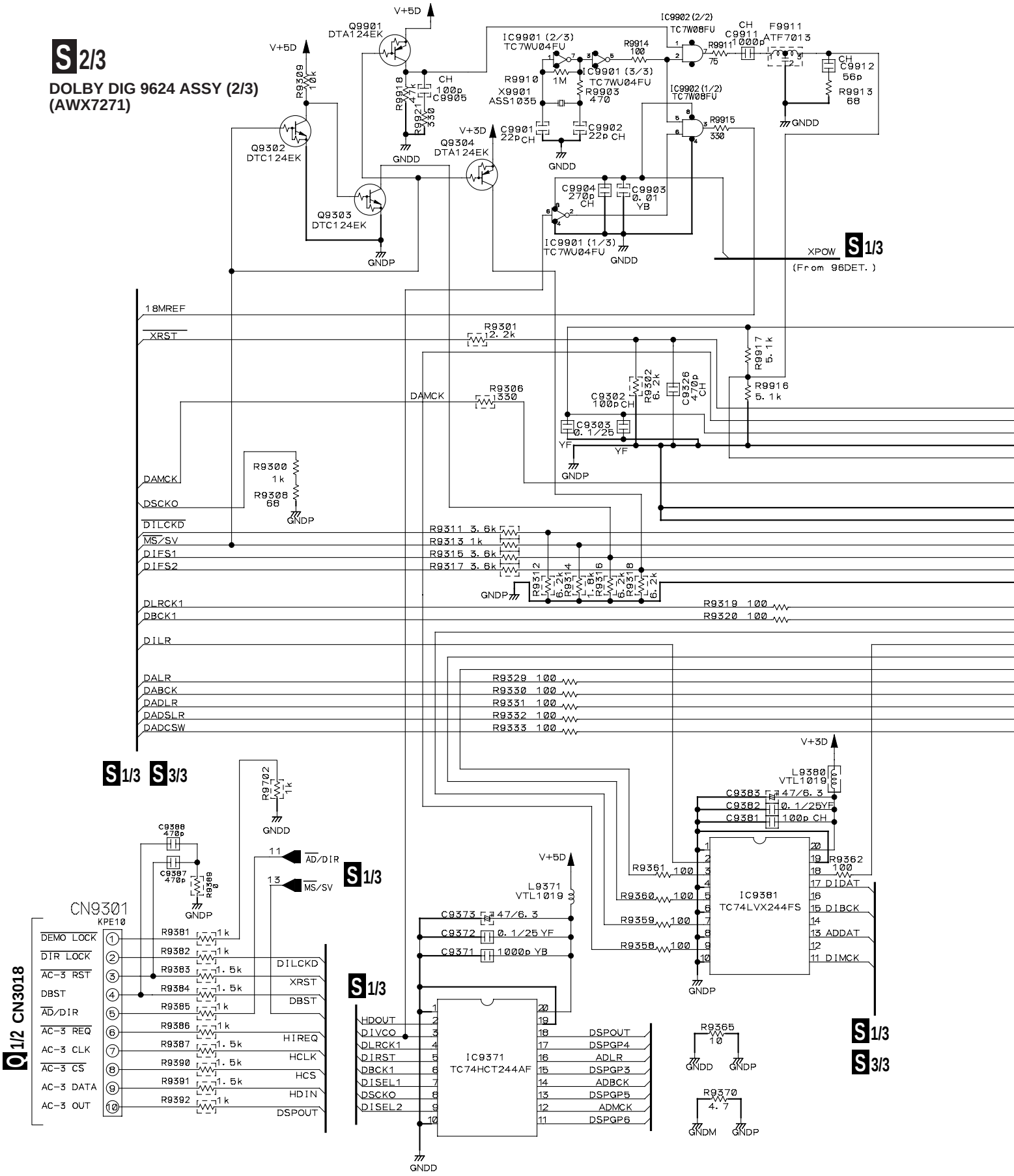

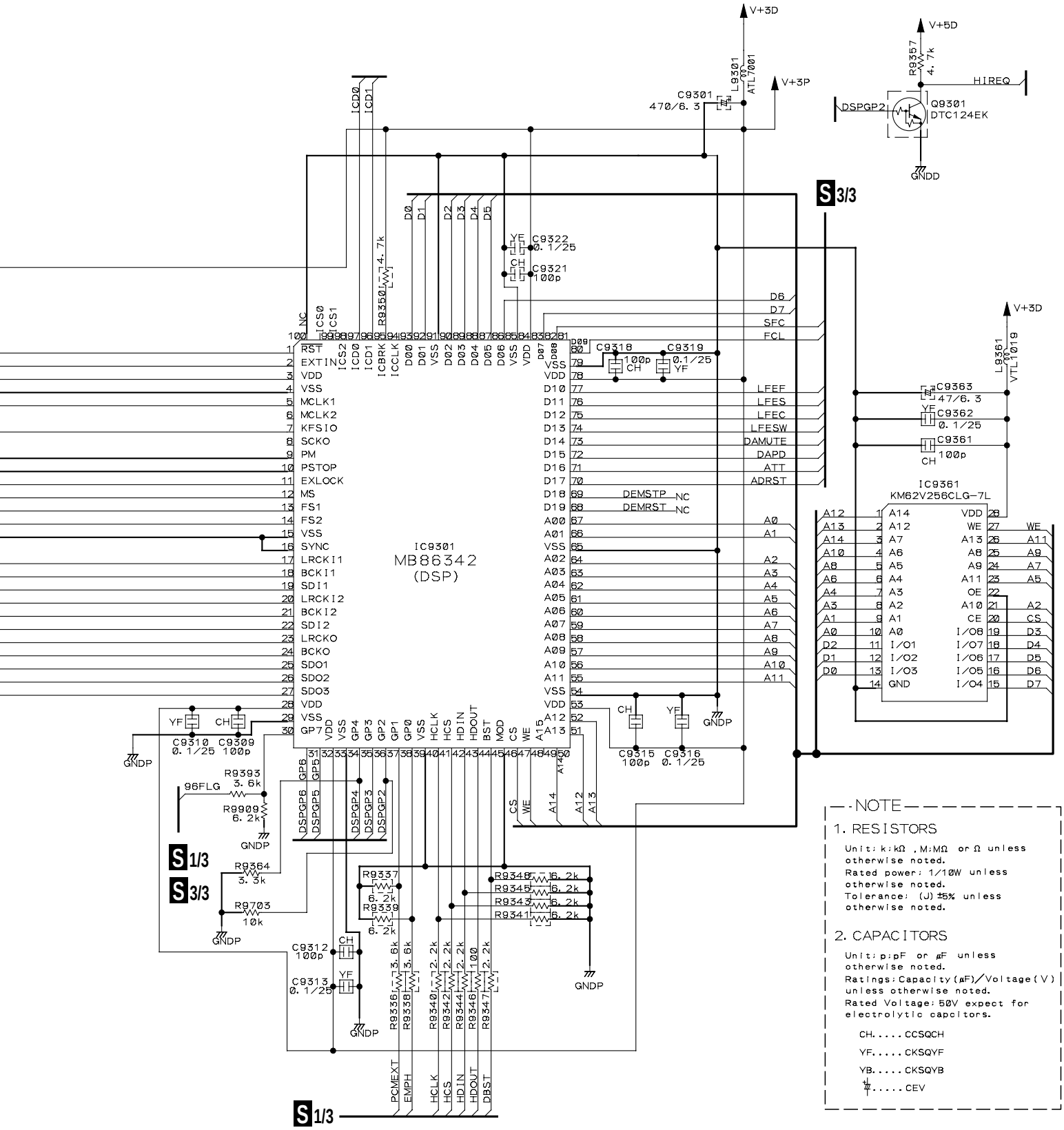
IC9301
MB86342
(DSP)
IC9361
KM62V256CLG-7L
V+3D
V+5D
V+3P
GNDD
GNDP
S 3/3
S 1/3
S 2/3
NOTE
1. RESISTORS
Unit: k:kΩ ,M:MΩ or Ω unless otherwise noted.
Rated power: 1/10W unless otherwise noted.
Tolerance: (J)±5% unless otherwise noted.
2. CAPACITORS
Unit: p:pF or μF unless otherwise noted.
Ratings: Capacity(μF)/Voltage(V) unless otherwise noted.
Rated Voltage: 50V expect for electrolytic capcitors.
CH.....CCSQCH
YF.....CKSQYF
YB.....CKSQYB
.....CEV

3.2.6 DOLBY DIG 9624 ASSY (3/3)

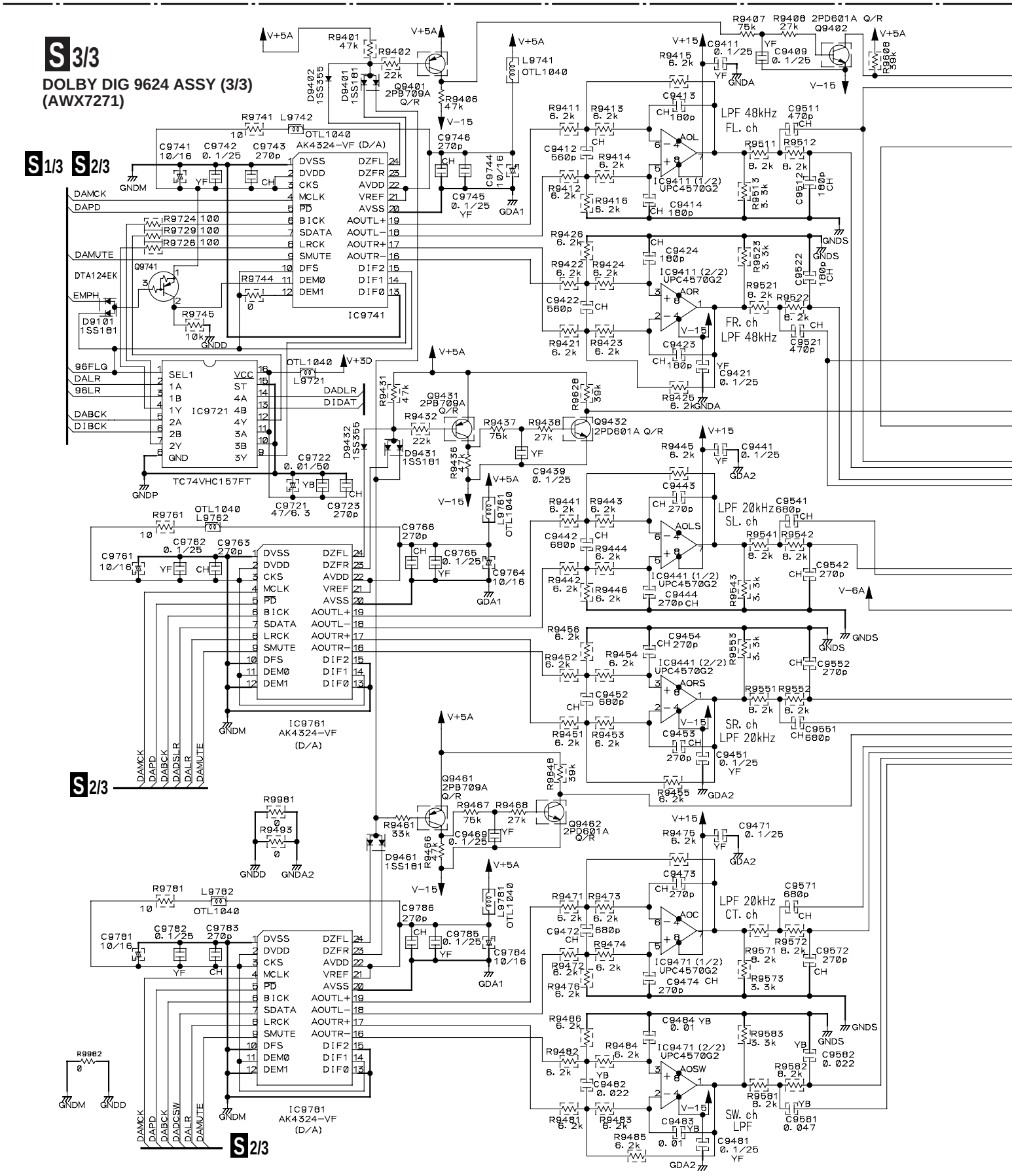

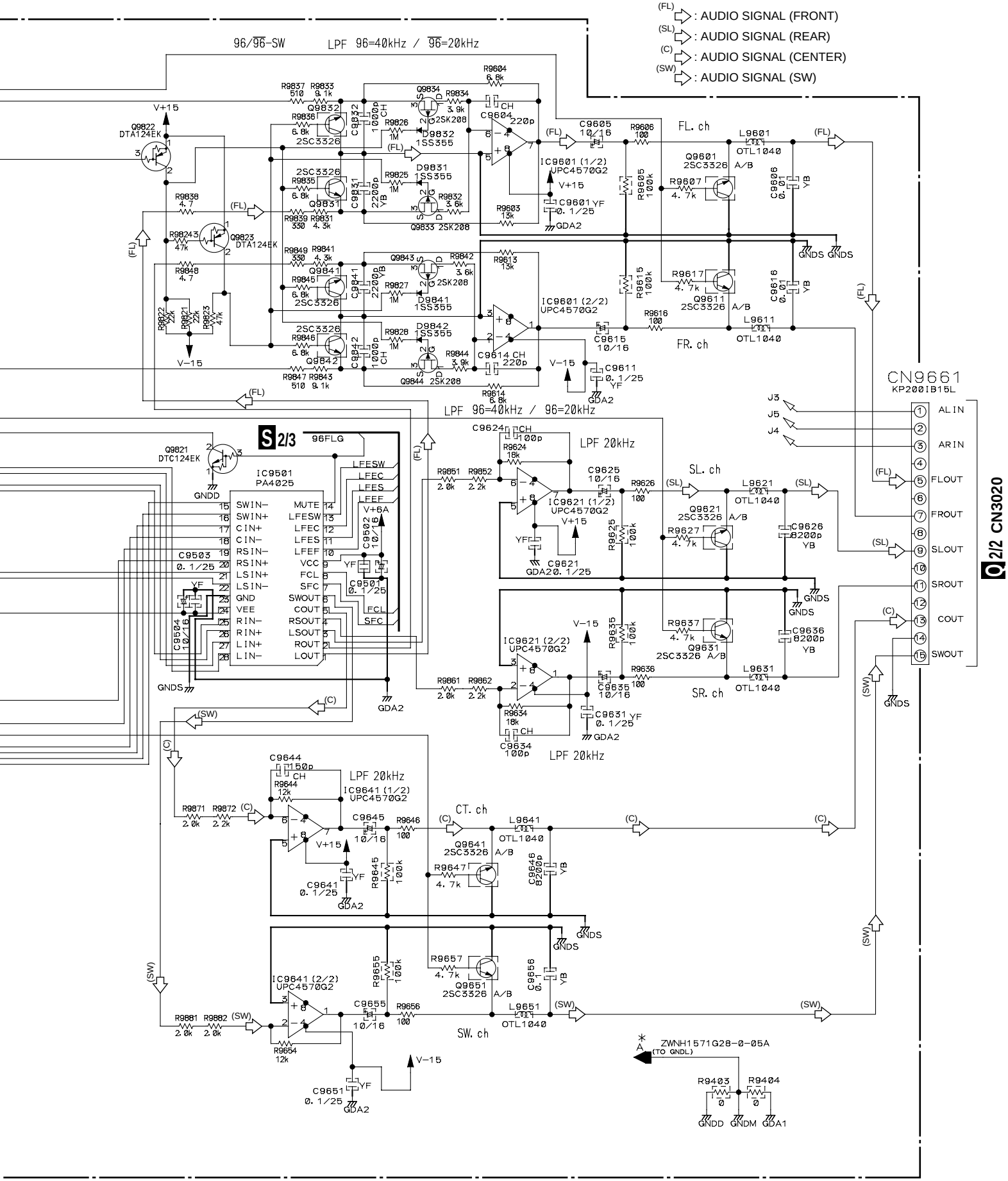
(FL) : AUDIO SIGNAL (FRONT)
(SL) : AUDIO SIGNAL (REAR)
(C) : AUDIO SIGNAL (CENTER)
(SW) : AUDIO SIGNAL (SW)
96/96-SW
LPF 96=40kHz / 96=20kHz
FL. ch
FR. ch
SL. ch
SR. ch
CT. ch
SW. ch
LPF 20kHz
S 2/3
IC9501
PA4025
CN9661
KP200IB15L
Q 2/2 CN3020
ALIN
ARIN
FLOUT
FROUT
SLOUT
SROUT
COUT
SWOUT
ZWNH1571G28-0-05A
(TO GNDL)

3.2.7 AMP ASSY, HP ASSY and SWF ASSY

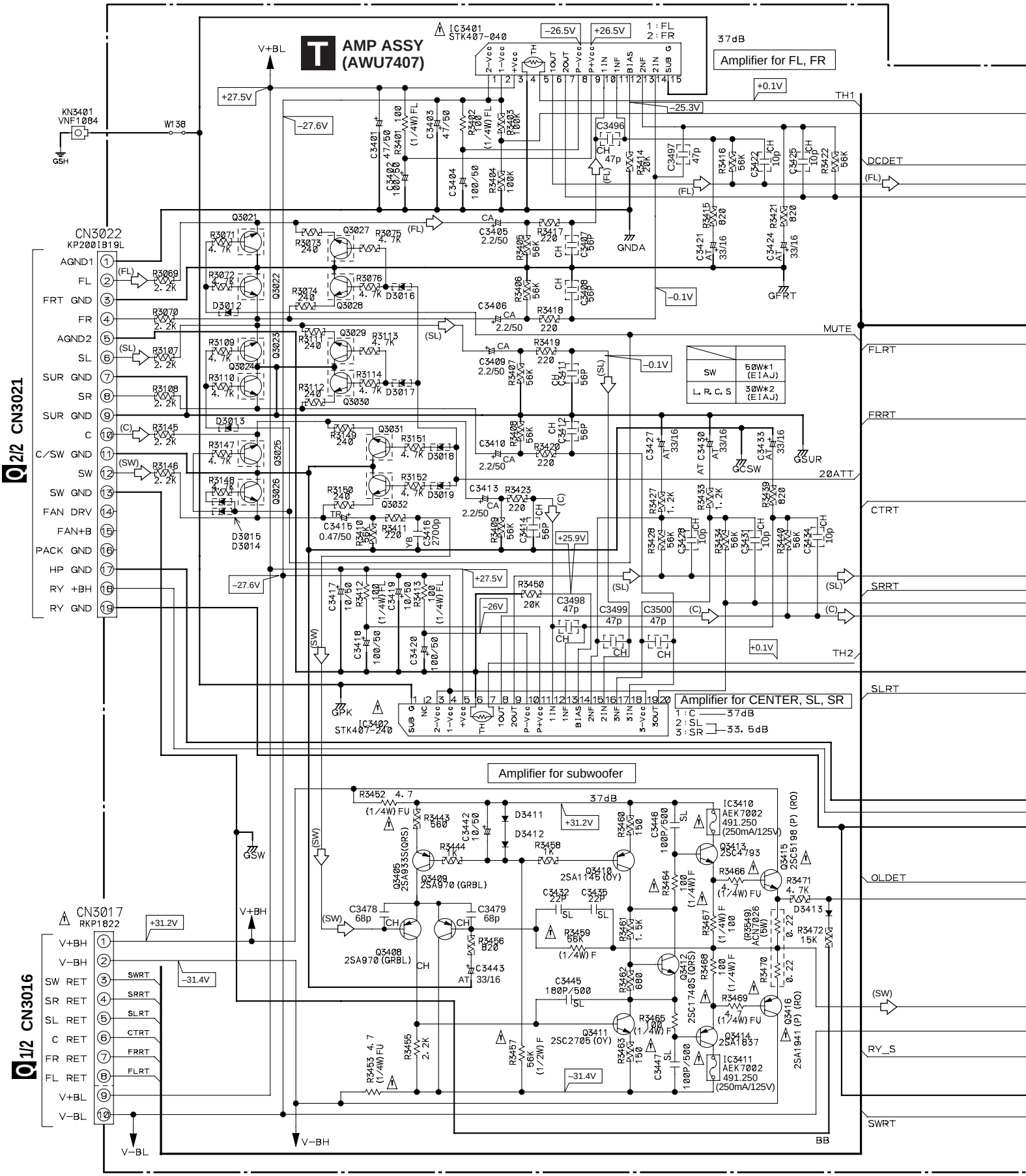

HTZ-7, HTZ-C7, HTZ-SW7, HTZ-ST7

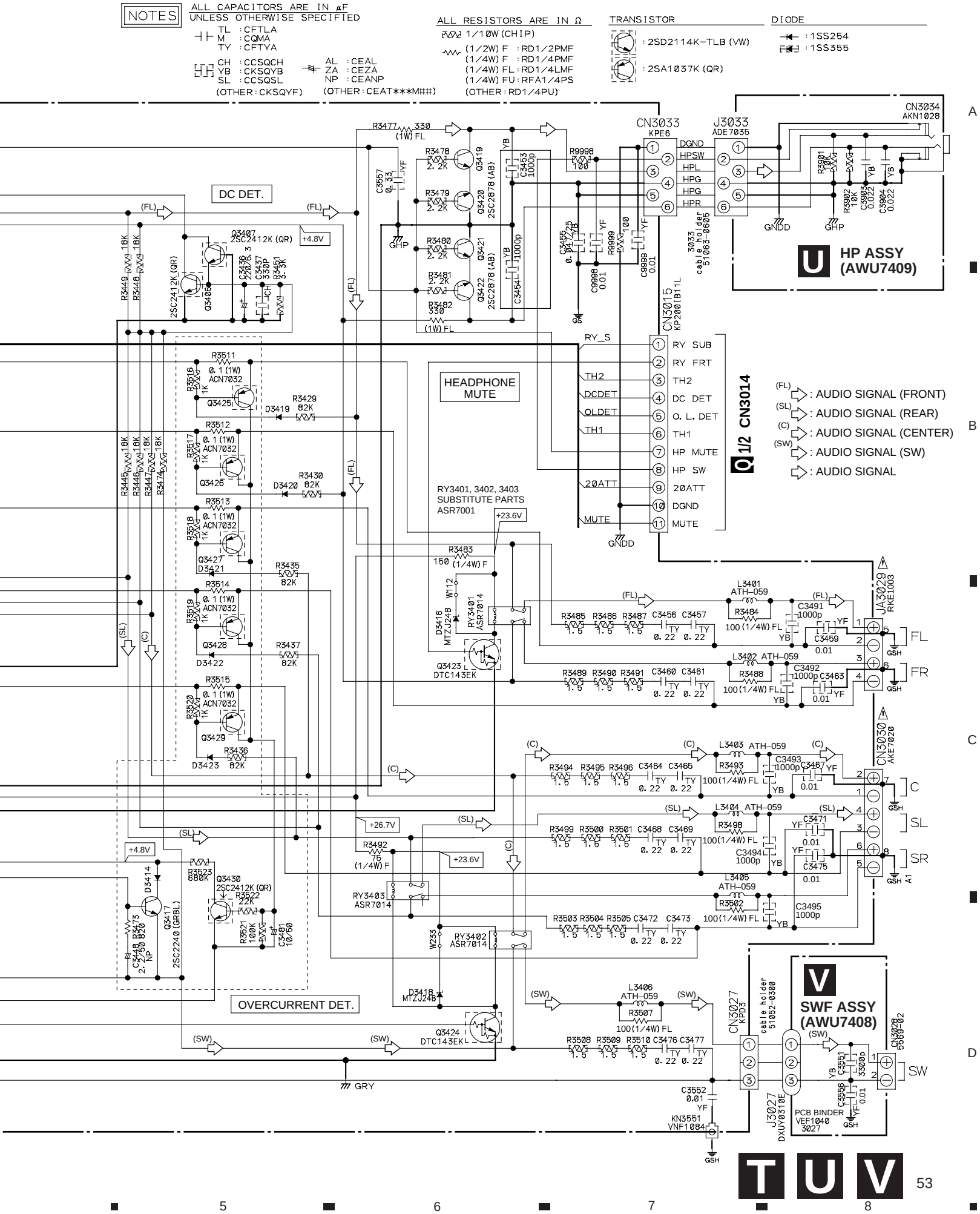

3.2.8 POWER SUPPLY ASSY, SECONDARY ASSY, PRIMARY ASSY, CNB ASSY and FLDP ASSY

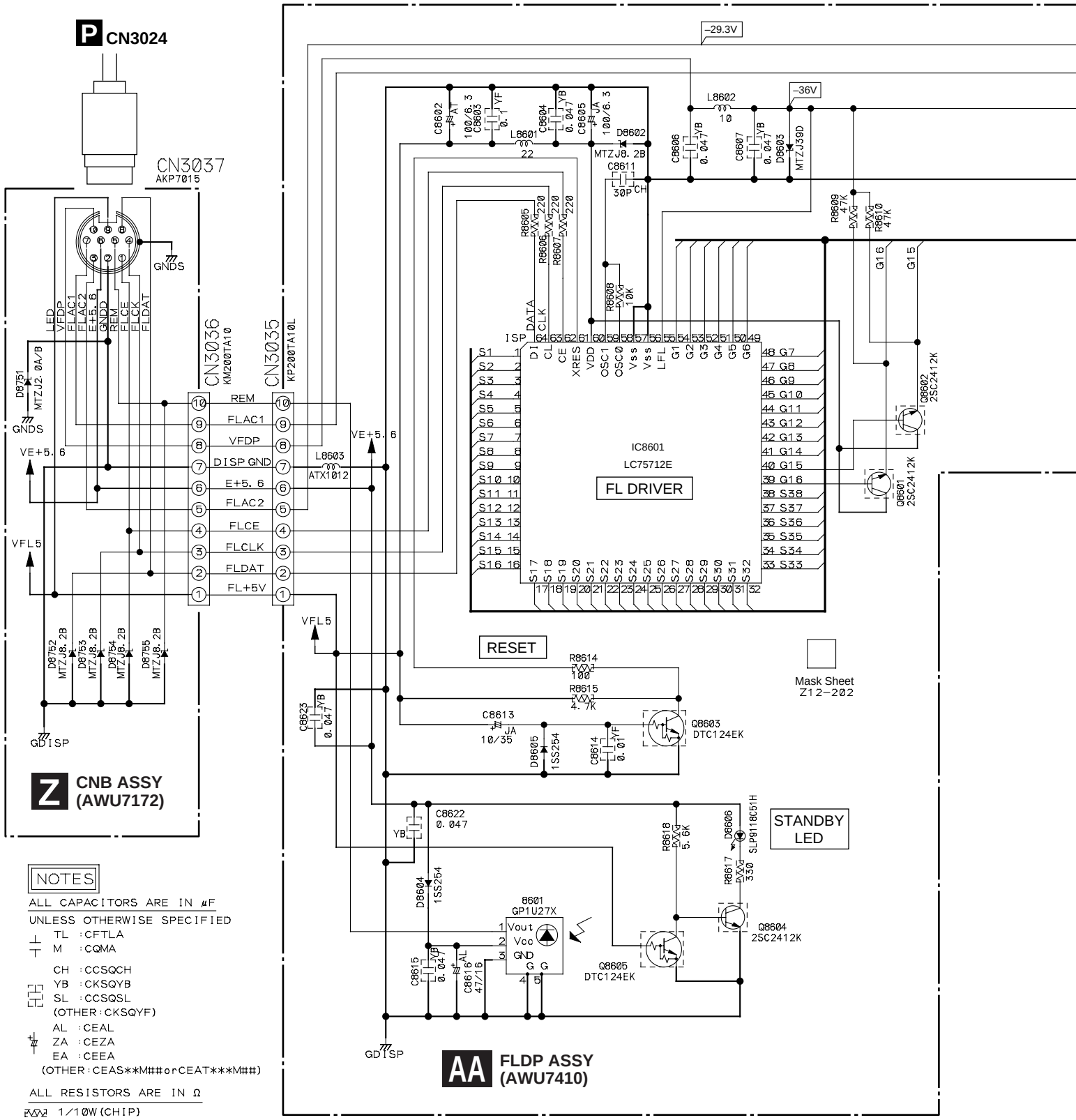

NOTES

ALL CAPACITORS ARE IN μF
UNLESS OTHERWISE SPECIFIED
TL : CFTLA
M : CQMA
CH : CCSQCH
YB : CKSQYB
SL : CCSQSL
(OTHER : CKSQYF)
AL : CEAL
ZA : CEZA
EA : CEEA
(OTHER : CEAS**M##orCEAT***M##)

ALL RESISTORS ARE IN Ω
1/10W (CHIP)
1/4WPU

ALL INDUCTORS ARE IN μH
LAU

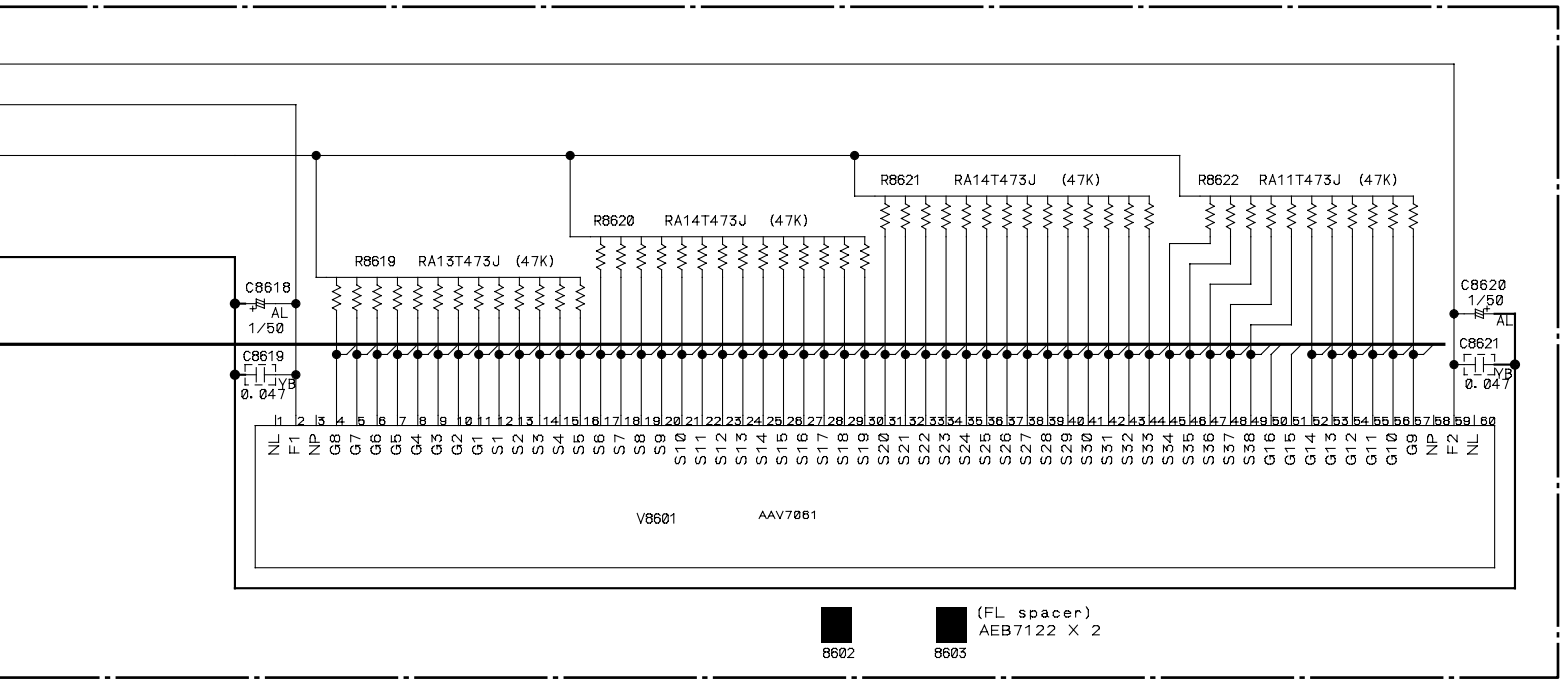
R8621 RA14T473J (47K)
R8622 RA11T473J (47K)
R8620 RA14T473J (47K)
R8619 RA13T473J (47K)
C8618 AL 1/50
C8619 YB 0.047
C8620 1/50 AL
C8621 YB 0.047
V8601 AAV7061
8602
8603
(FL spacer)
AEB7122 X 2

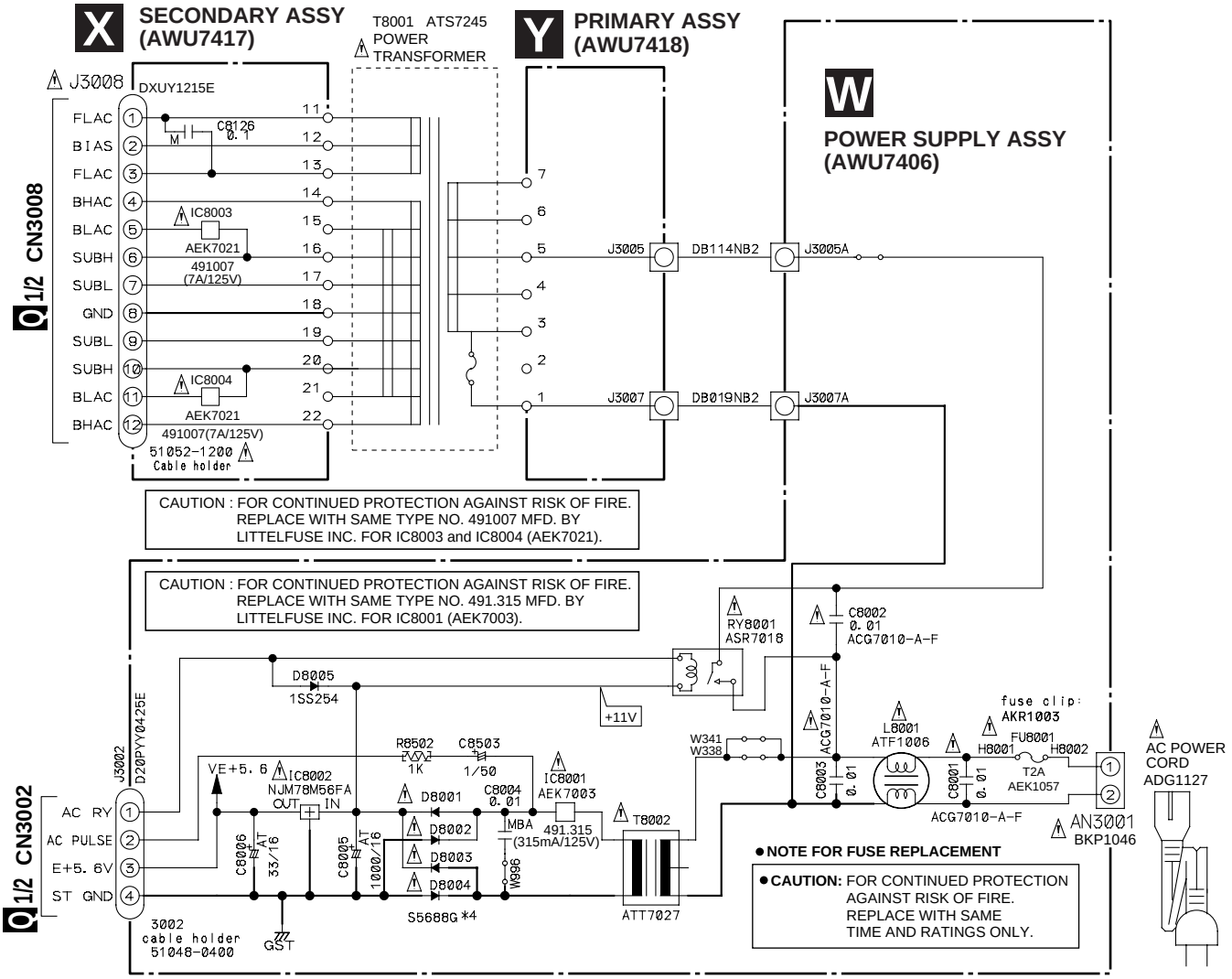
X SECONDARY ASSY (AWU7417)
T8001 ATS7245 POWER TRANSFORMER
Y PRIMARY ASSY (AWU7418)
W POWER SUPPLY ASSY (AWU7406)
J3008 DXUY1215E
FLAC
BIAS
FLAC
BHAC
BLAC
SUBH
SUBL
GND
SUBL
SUBH
BLAC
BHAC
CN3008 1/2
C8126 0.1
IC8003 AEK7021 491007 (7A/125V)
IC8004 AEK7021 491007(7A/125V)
51052-1200 Cable holder
J3005 DB114NB2 J3005A
J3007 DB019NB2 J3007A
CAUTION : FOR CONTINUED PROTECTION AGAINST RISK OF FIRE. REPLACE WITH SAME TYPE NO. 491007 MFD. BY LITTELFUSE INC. FOR IC8003 and IC8004 (AEK7021).
CAUTION : FOR CONTINUED PROTECTION AGAINST RISK OF FIRE. REPLACE WITH SAME TYPE NO. 491.315 MFD. BY LITTELFUSE INC. FOR IC8001 (AEK7003).
RY8001 ASR7018
C8002 0.01 ACG7010-A-F
D8005 1SS254
+11V
J3002 D20PYY0425E
CN3002 1/2
AC RY
AC PULSE
E+5. 6V
ST GND
VE+5. 6
IC8002 NJM78M56FA OUT IN
R8502 1K
C8503 1/50
D8001
D8002
D8003
D8004
C8004 0.01
IC8001 AEK7003
MBA 491.315 (315mA/125V)
S5688G *4
T8002
ATT7027
C8006 AT 33/16
C8005 AT 1000/16
W996
3002 cable holder 51048-0400
W341
W338
L8001 ATF1006
C8003 0.01
C8001 0.01
ACG7010-A-F
fuse clip: AKR1003
FU8001 T2A AEK1057
H8001
H8002
AN3001 BKP1046
AC POWER CORD ADG1127
● NOTE FOR FUSE REPLACEMENT
● CAUTION: FOR CONTINUED PROTECTION AGAINST RISK OF FIRE. REPLACE WITH SAME TIME AND RATINGS ONLY.

4. PCB CONNECTION DIAGRAM

NOTE FOR PCB DIAGRAMS:

1. Part numbers in PCB diagrams match those in the schematic diagrams.
2. A comparison between the main parts of PCB and schematic diagrams is shown below.

Symbol in PCB Diagrams	Symbol in Schematic Diagrams	Part Name
B C E	B C E B C E	Transistor
B C E	B C E B C E	Transistor with resistor
D G S	D G S D G S	Field effect transistor

Symbol in PCB Diagrams	Symbol in Schematic Diagrams	Part Name
		Resistor array
		3-terminal regulator

3. The parts mounted on this PCB include all necessary parts for several destination.
   For further information for respective destinations, be sure to check with the schematic diagram.
4. Viewpoint of PCB diagrams

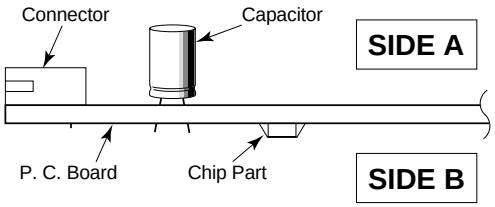

4.1 DVD CENTER UNIT (HTZ-C7)

4.1.1 LOMB, LOSB, INSB and FGSB ASSEMBLIES

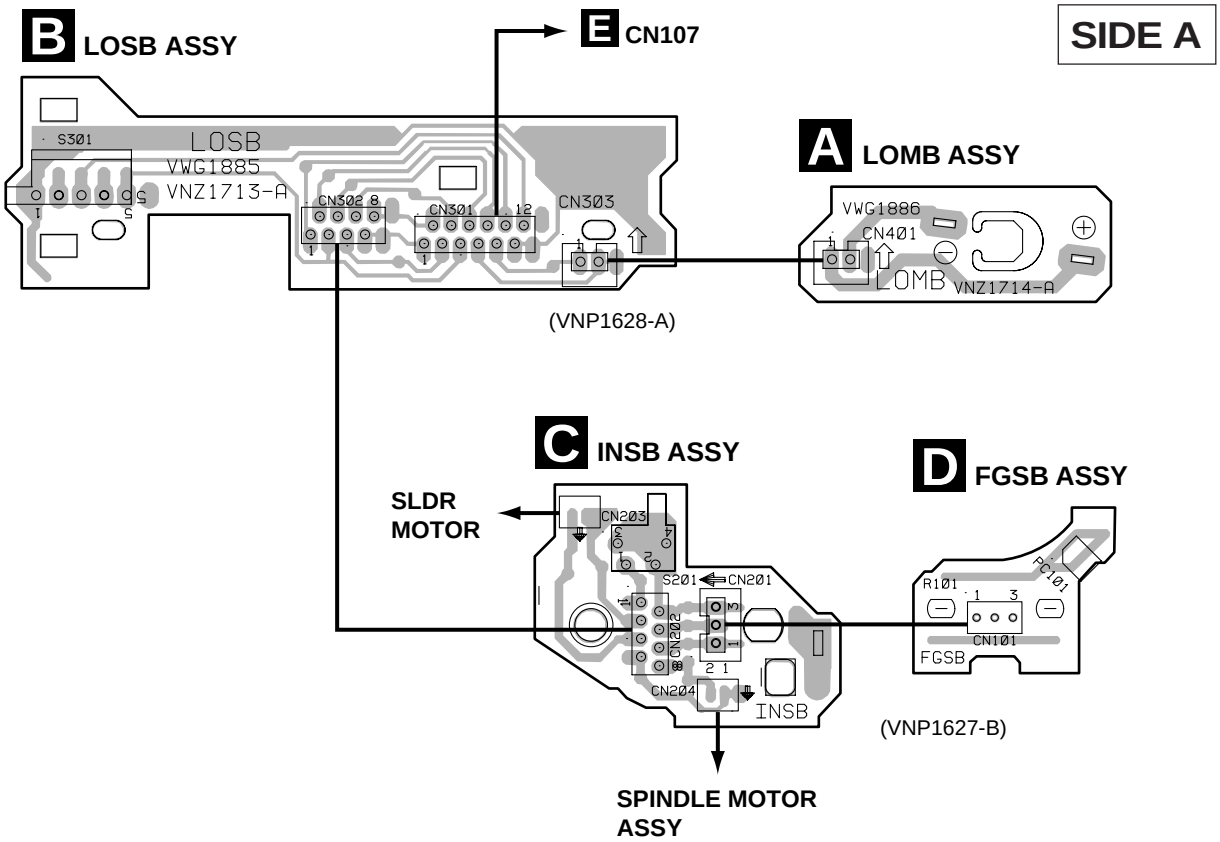

4.1.2 DVDM ASSY

• This PCB is a four-layered board.
Midddle layer is a mainly connected to Vcc and GND.

SIDE A

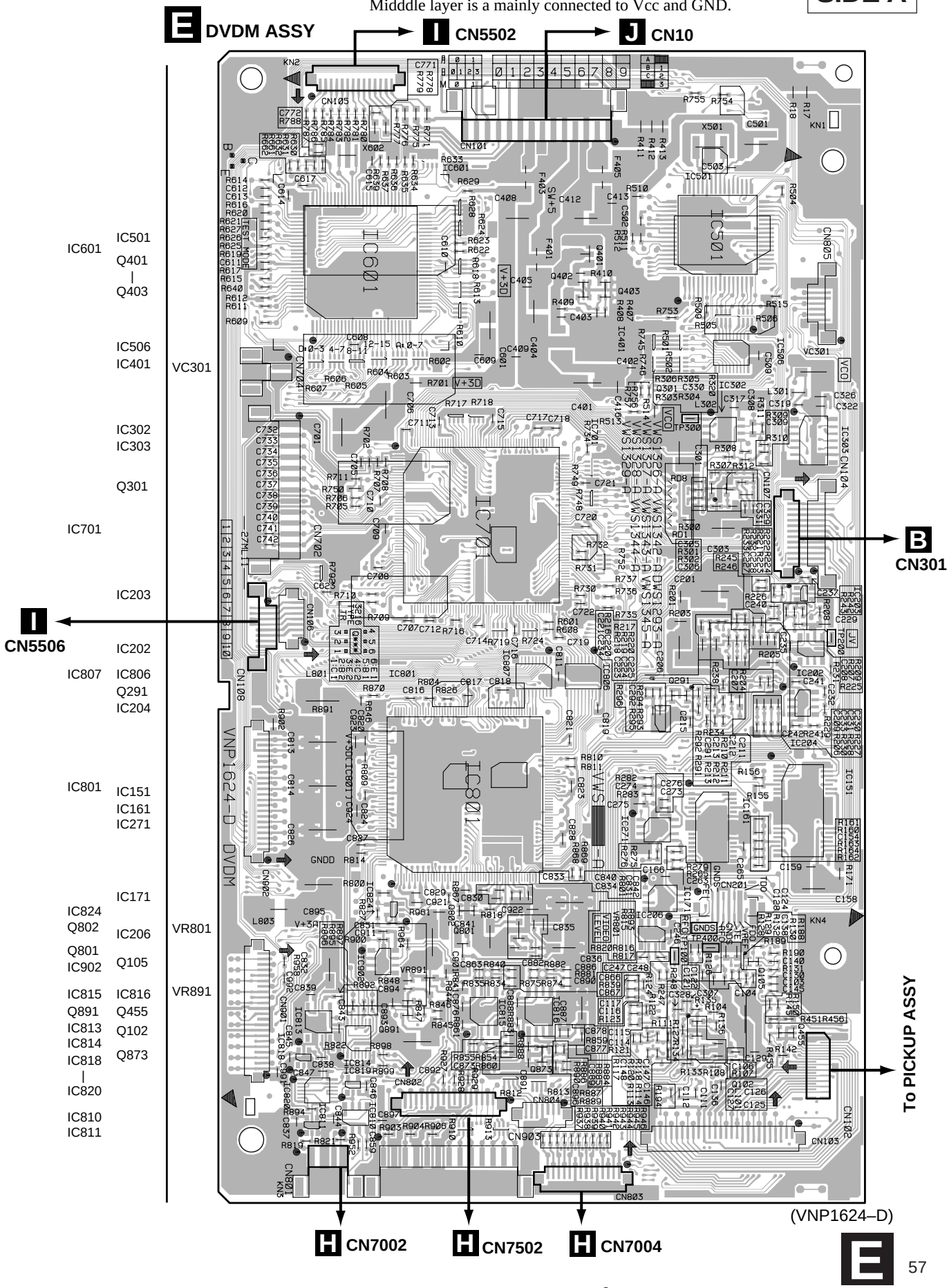

(VNP1624–D)

E DVDM ASSY

- This PCB is a four-layered board.
  Midddle layer is a mainly connected to Vcc and GND.

SIDE B

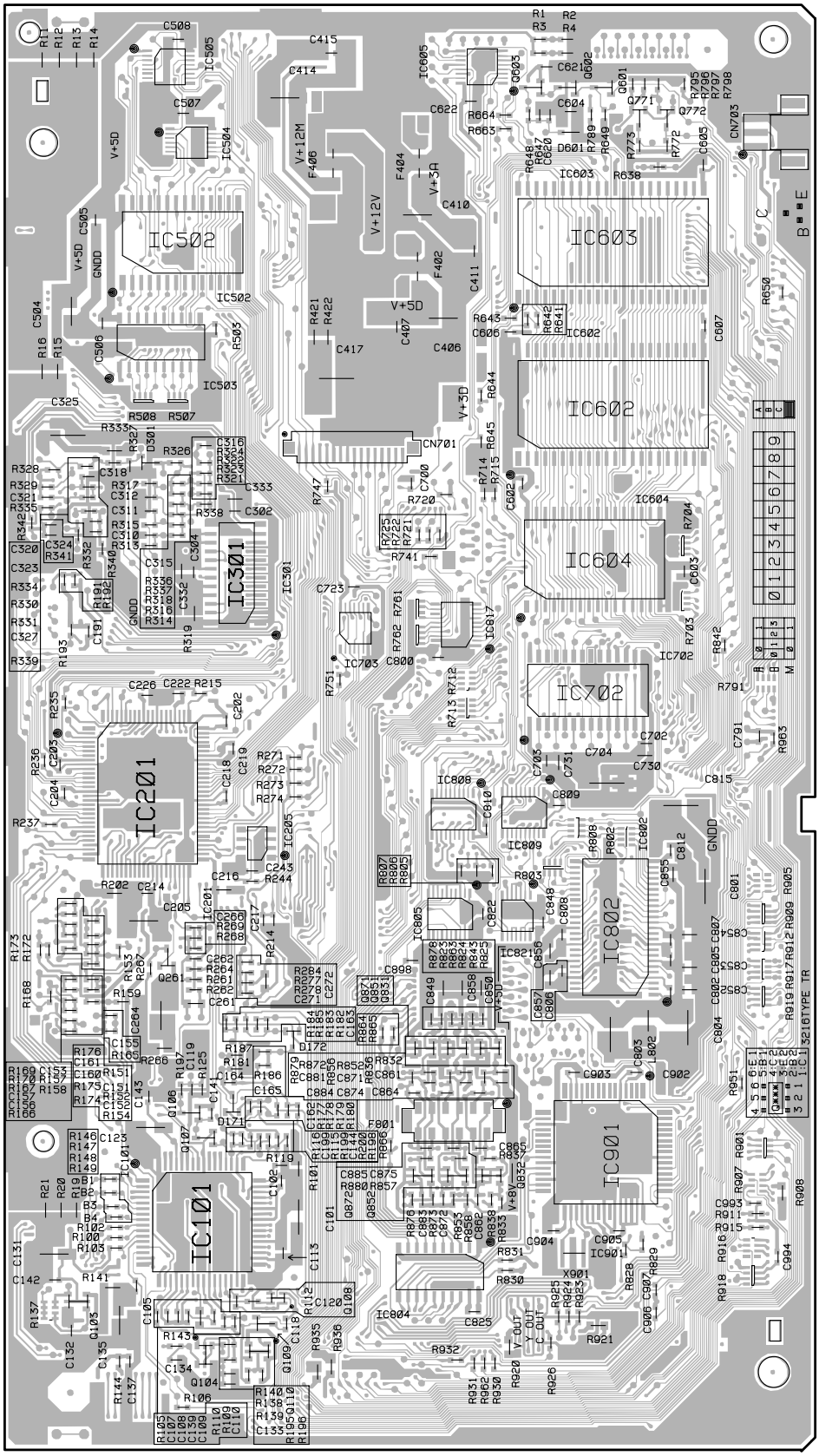

IC505 Q601
IC605 |
Q603
Q771
IC504 Q772

IC502 IC603

IC503

IC602

IC301 IC604

IC703 IC817

IC702

IC201 IC808
IC809

IC205

IC805
IC821
IC802
Q261

Q871
Q851
Q831

Q106
Q107 IC901
Q872
Q852
Q832

IC101

Q103 IC804
Q108
|
Q110
Q104

(VNP1624-D)

4.1.3 FM/AM TUNER MODULE

A

SIDE A

I **CN5504**

F **FM/AM TUNER MODULE**

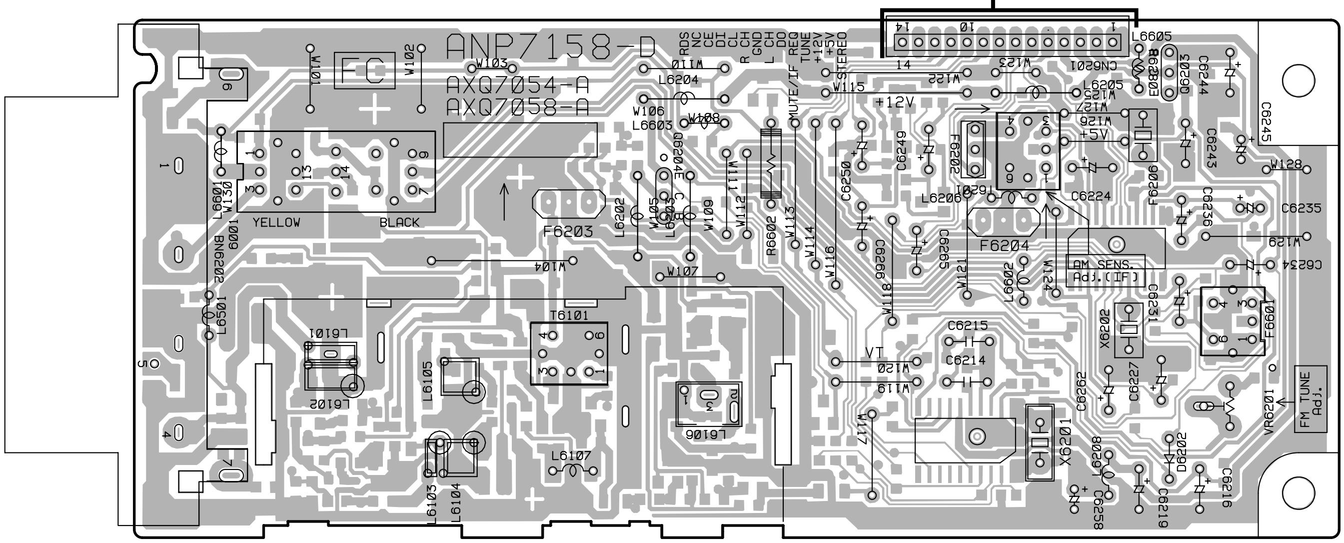

(ANP7158-D)

B

VR6201

Q6204 Q6203

SIDE B

C

F **FM/AM TUNER MODULE**

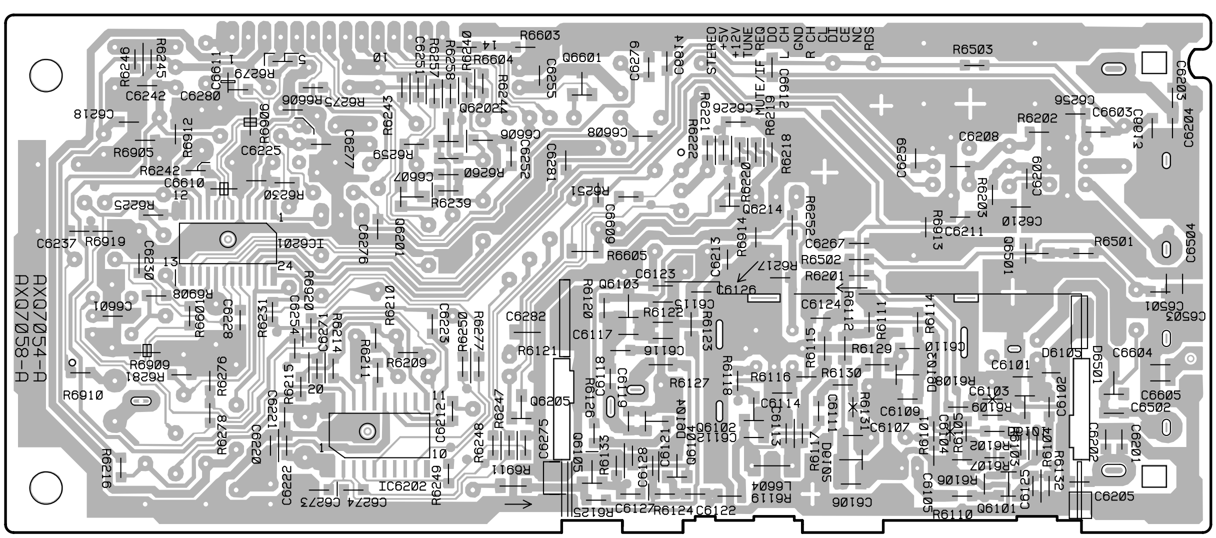

D

IC6201 Q6201 Q6202 Q6601 Q6214 Q6501

IC6202 Q6205 Q6102 – Q6105 Q6101

(ANP7158-D)

4.1.4 VIDEO ASSY and SVIDEO ASSY

SIDE A

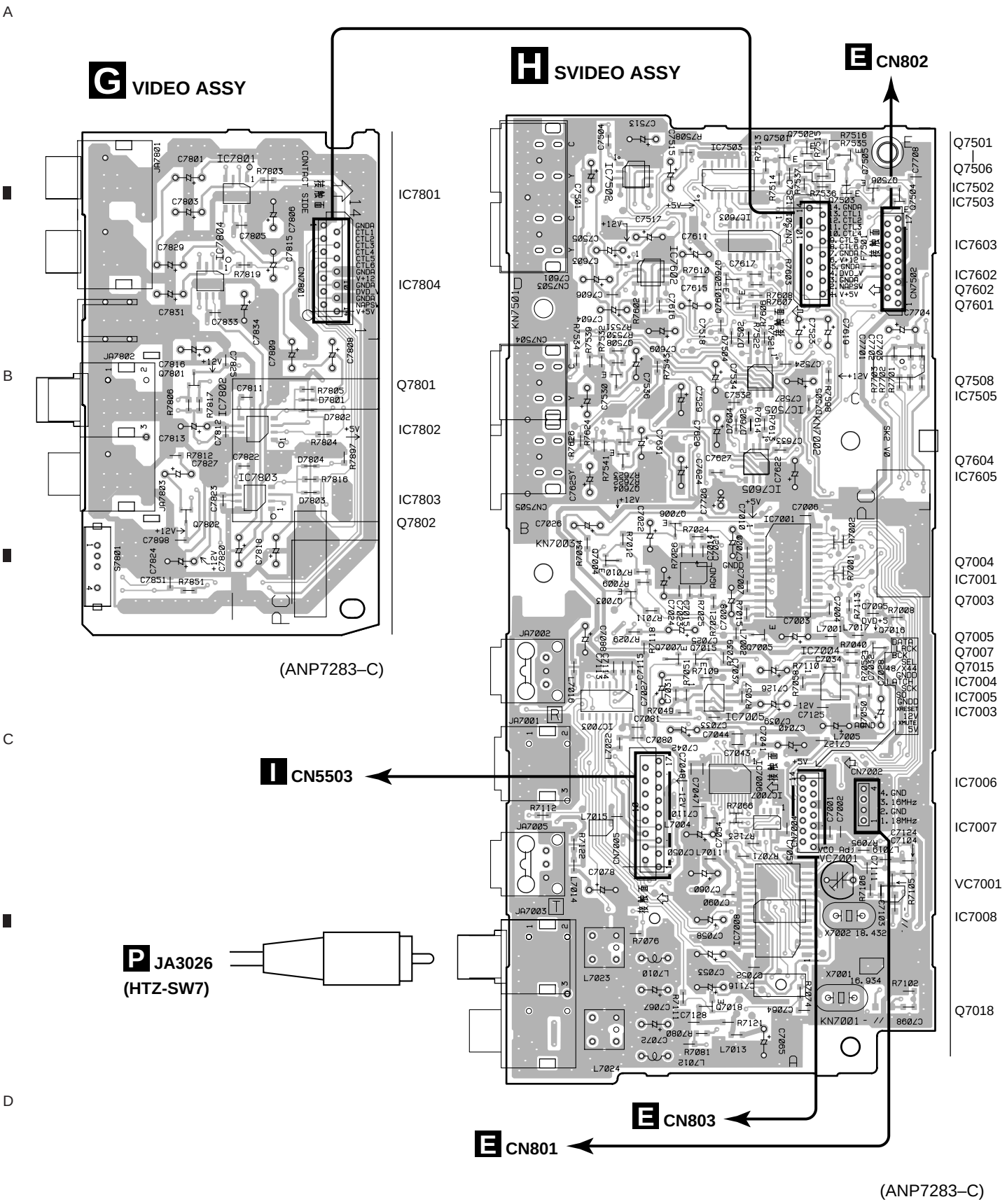

SIDE B

H SVIDEO ASSY

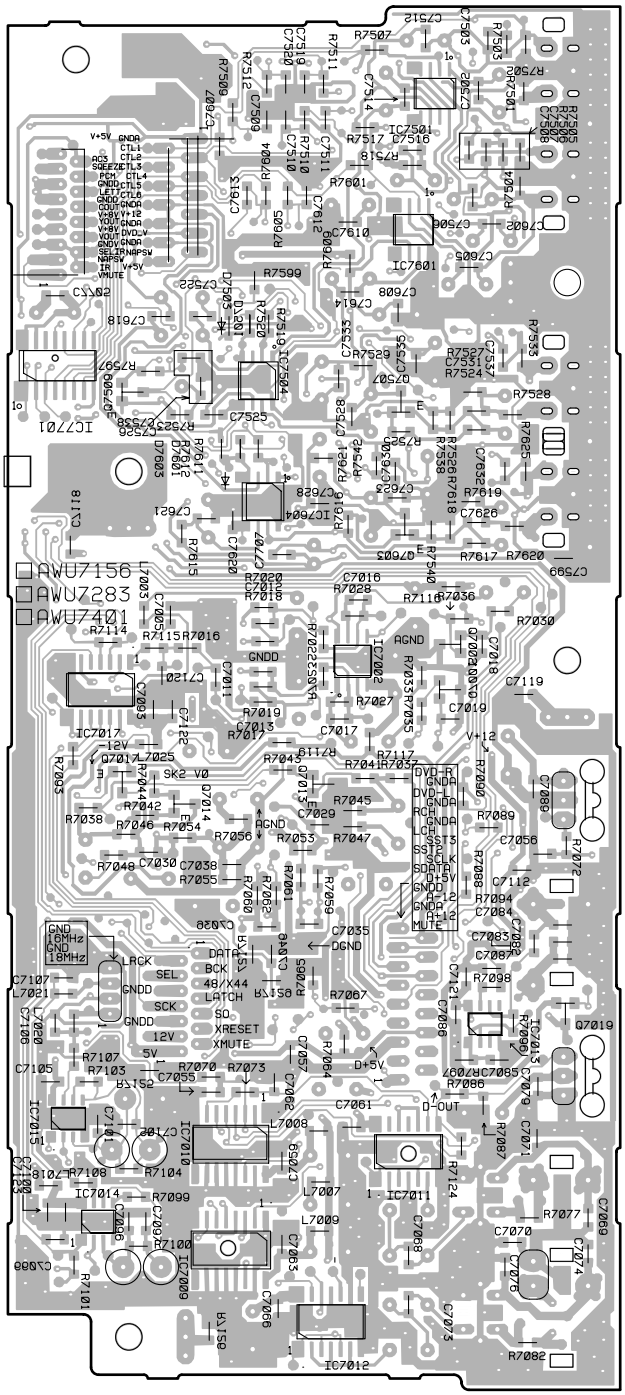

IC7501
IC7801
IC7701
Q7509
IC7504
Q7507
IC7604
Q7603
IC7002
Q7002
Q7001
IC7017
Q7017
Q7013
Q7019
IC7013
IC7015
IC7010
IC7011
IC7014
IC7009
IC7012

(ANP7283–C)

G VIDEO ASSY

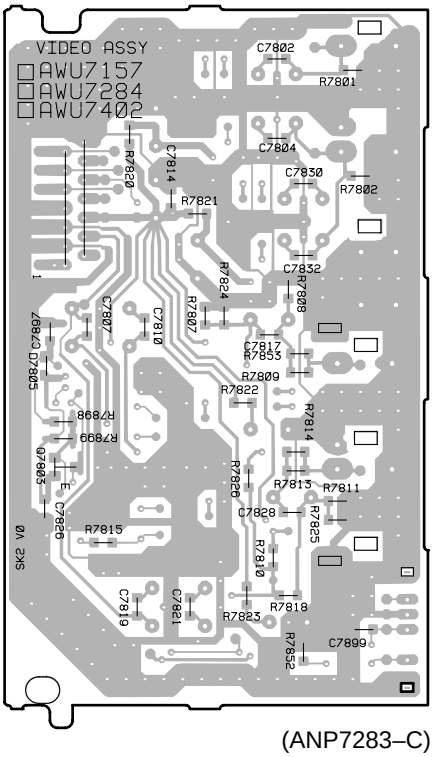

Q7803

(ANP7283–C)

4.1.5 MOTHER ASSY, FRONT (1) ASSY, FRONT (2) ASSY and LAMP ASSY

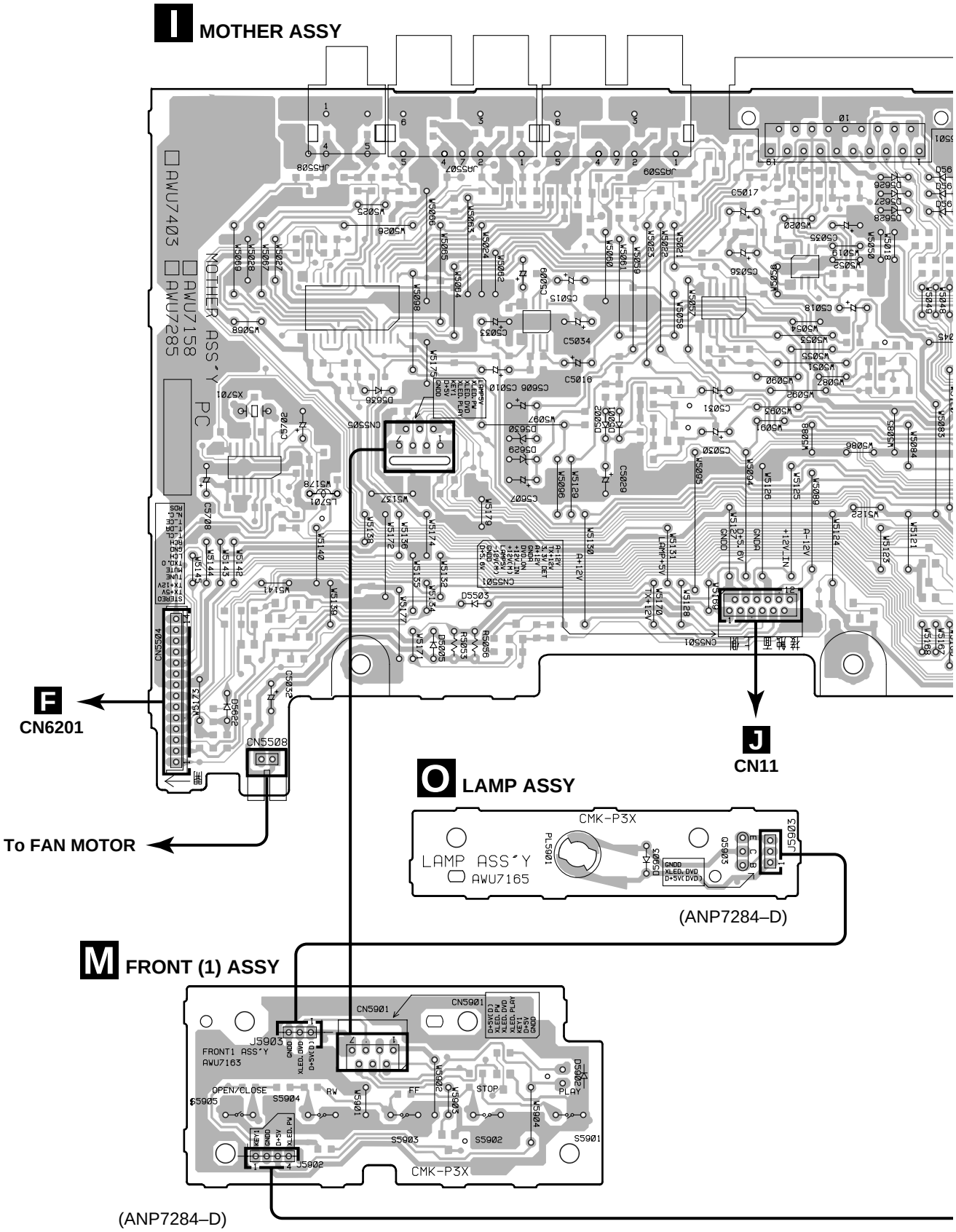

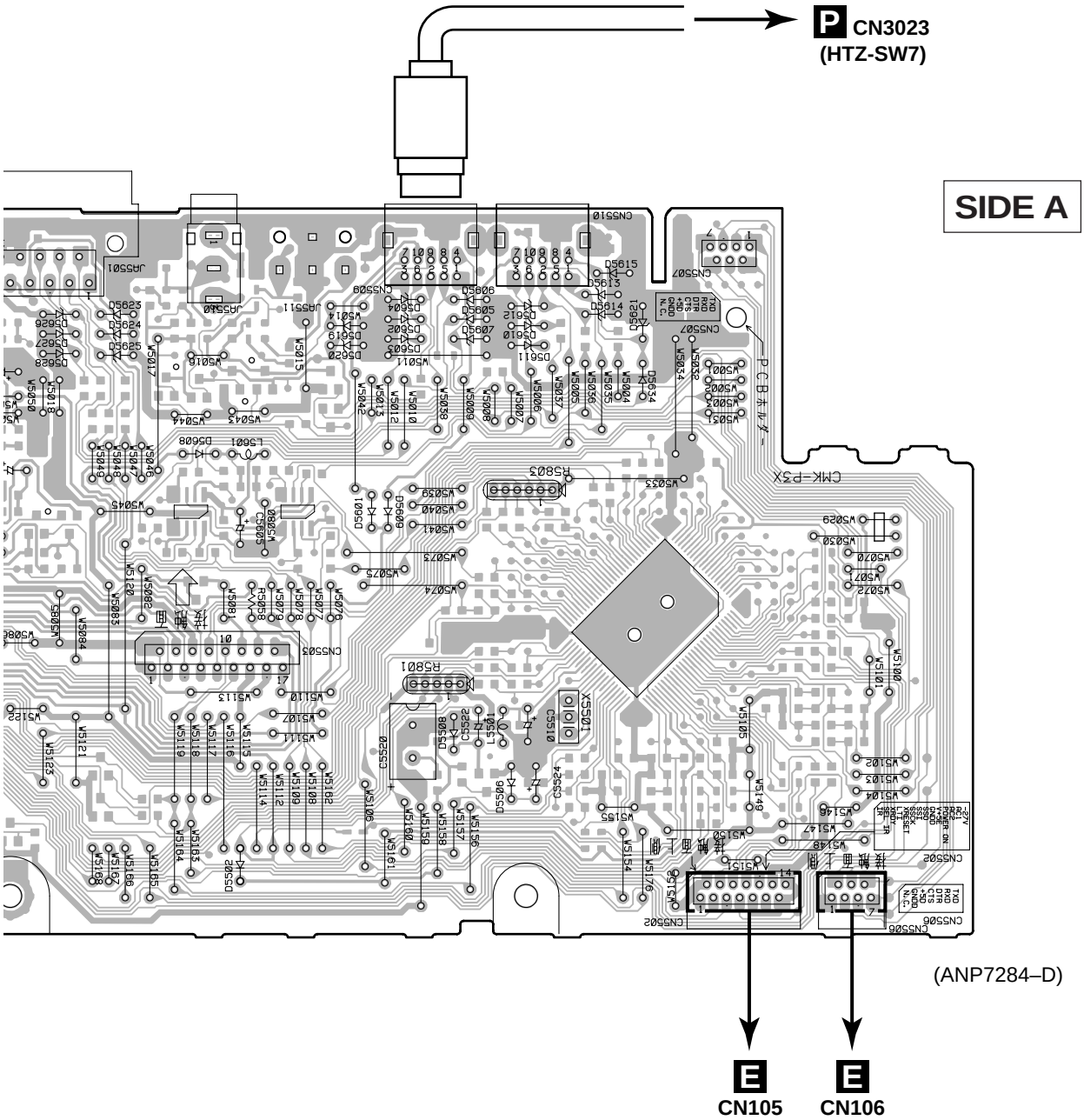
P CN3023
(HTZ-SW7)
SIDE A
(ANP7284–D)
E CN105
E CN106

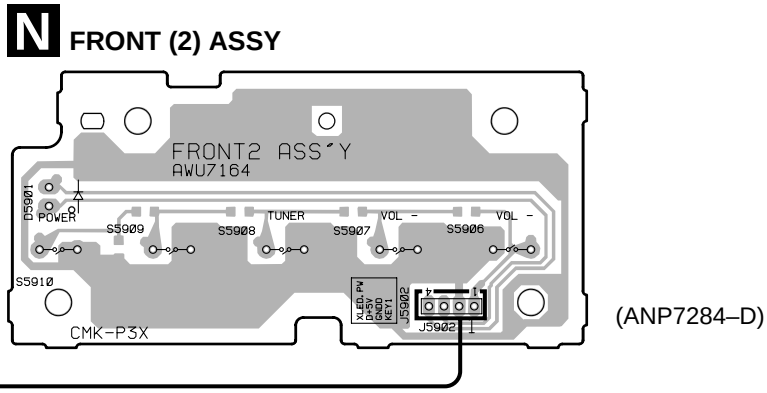
N FRONT (2) ASSY
FRONT2 ASS'Y
AWU7164
POWER
TUNER
VOL –
VOL –
S5909
S5908
S5907
S5906
S5910
CMK-P3X
(ANP7284–D)

SIDE B

I MOTHER ASSY

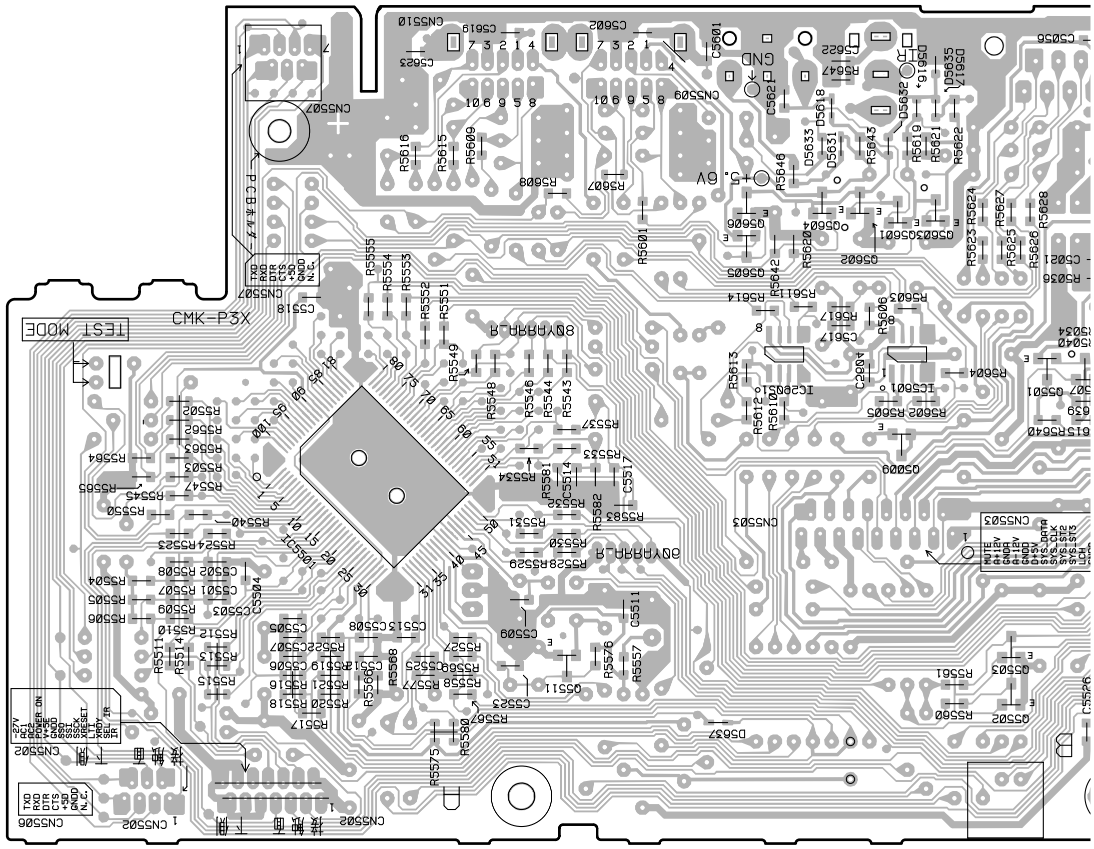

Q5601–Q5606

IC5501 Q5511 IC5602 IC5601 Q5009 Q5502 Q5503 Q5501

(ANP7284–D)

N FRONT (2) ASSY

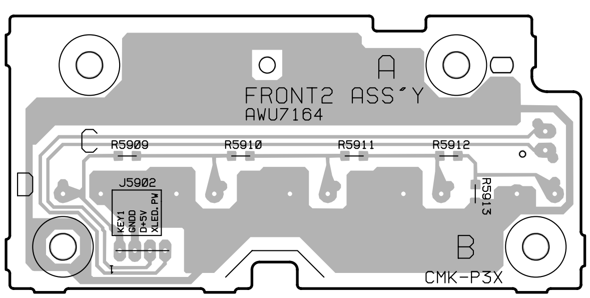

(ANP7284–D)

SIDE B

A

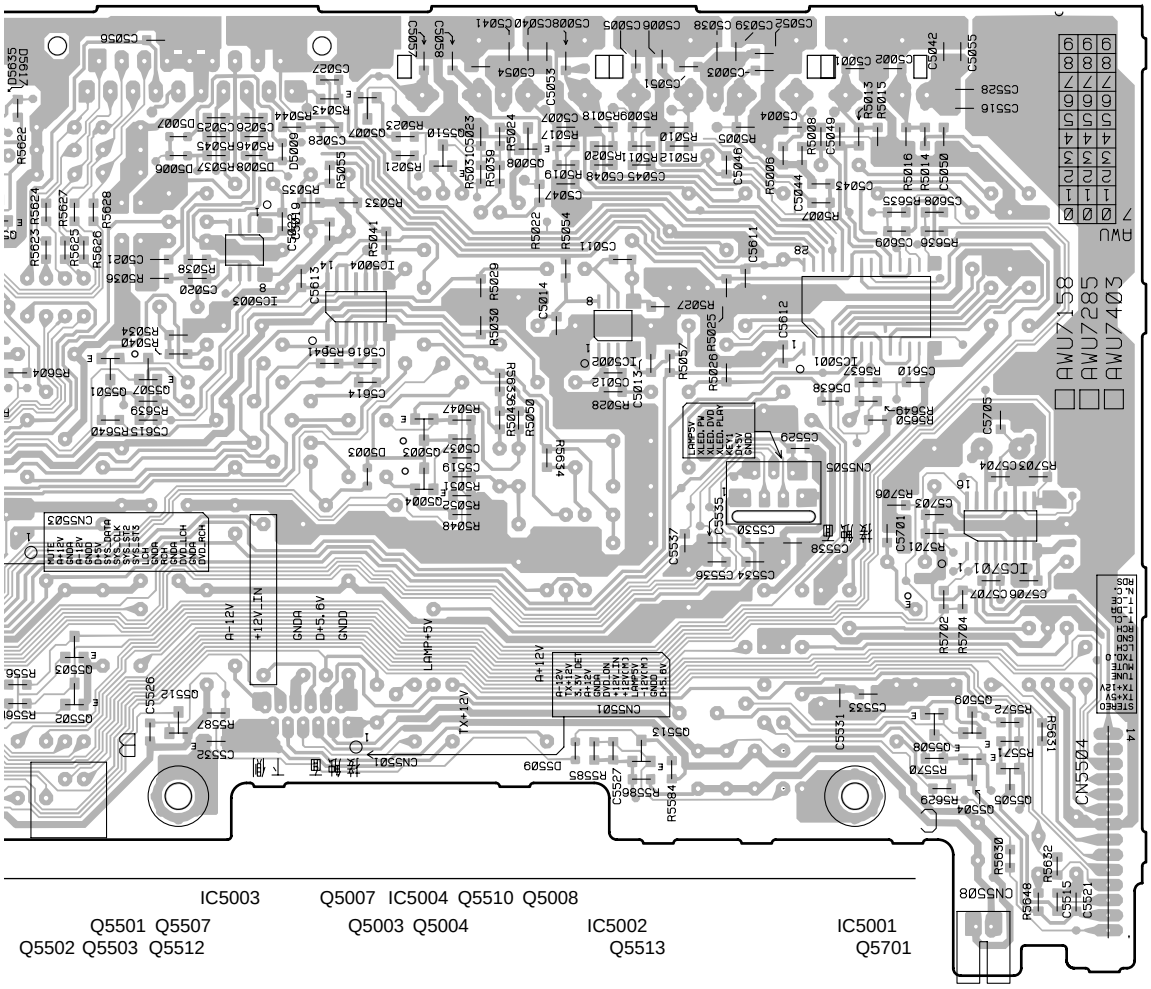

IC5003 Q5007 IC5004 Q5510 Q5008

Q5501 Q5507 Q5003 Q5004 IC5002 IC5001

Q5502 Q5503 Q5512 Q5513 Q5701

IC5701

Q5508 Q5509

Q5504 Q5505

B

C

M FRONT (1) ASSY

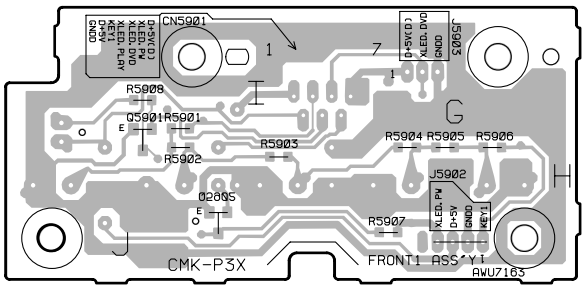

Q5901 Q5902

D

(ANP7284–D)

4.1.6 POWER MAIN ASSY, POWER SUB ASSY and AC ASSY

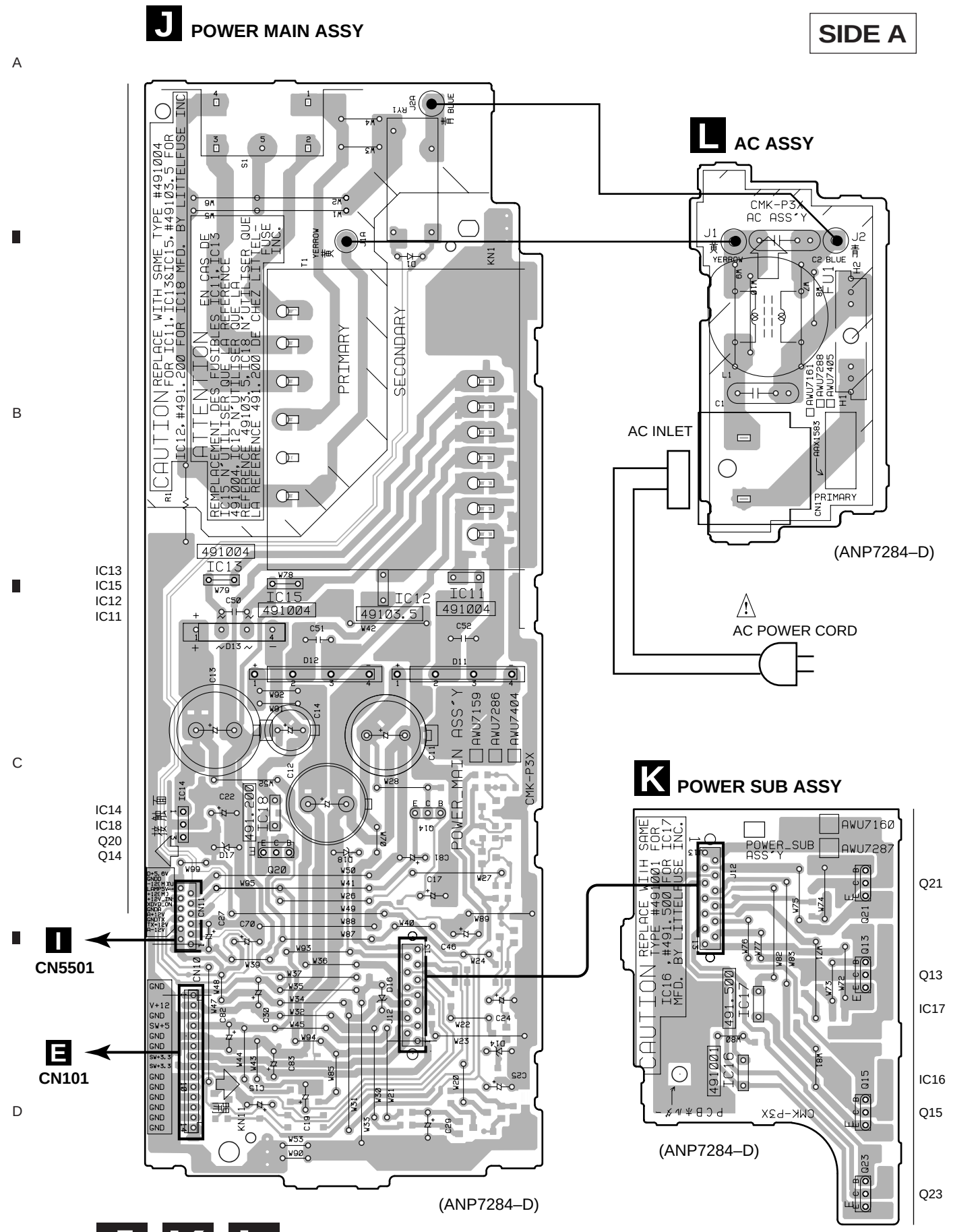

SIDE B

J POWER MAIN ASSY

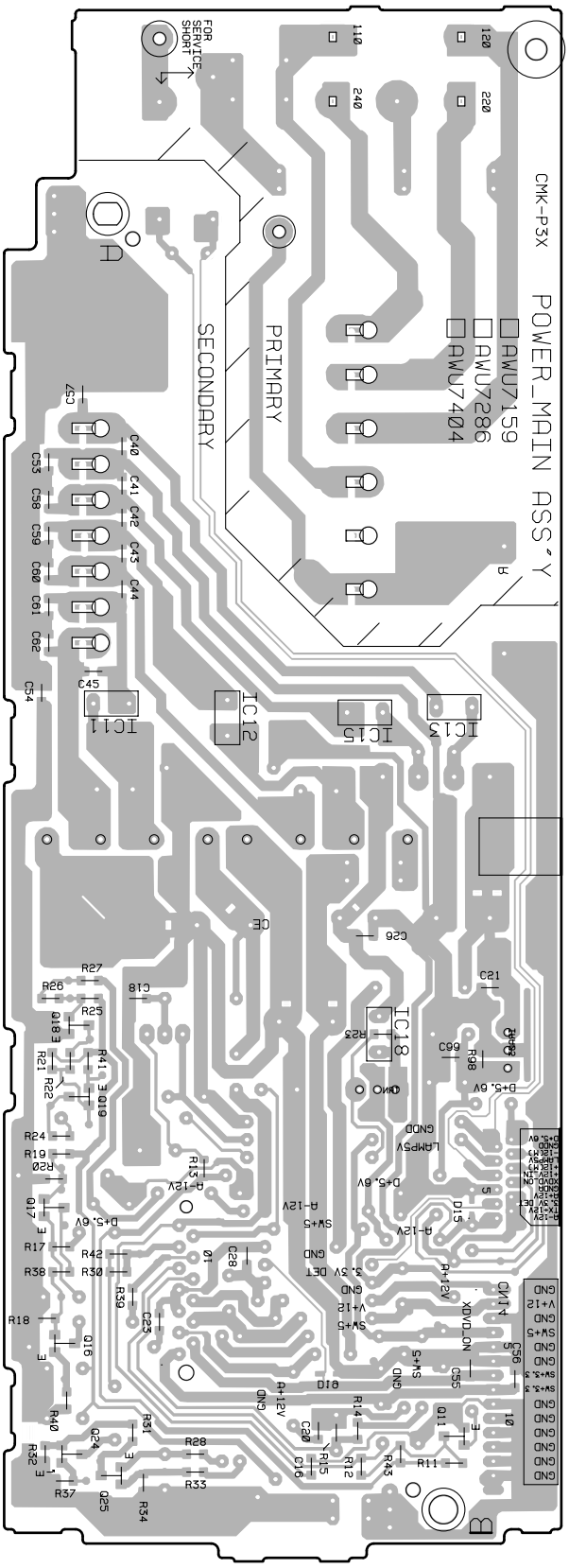

(ANP7284–D)

K POWER SUB ASSY

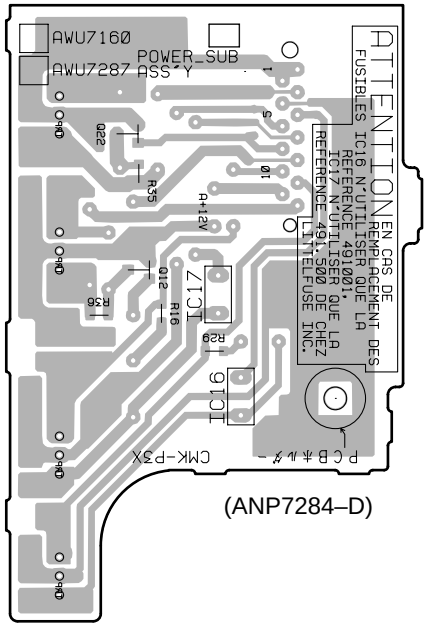

(ANP7284–D)

4.2 POWERED SUBWOOFER (HTZ-SW7)

4.2.1 IF ASSY, MAIN ASSY and REG (1) ASSY

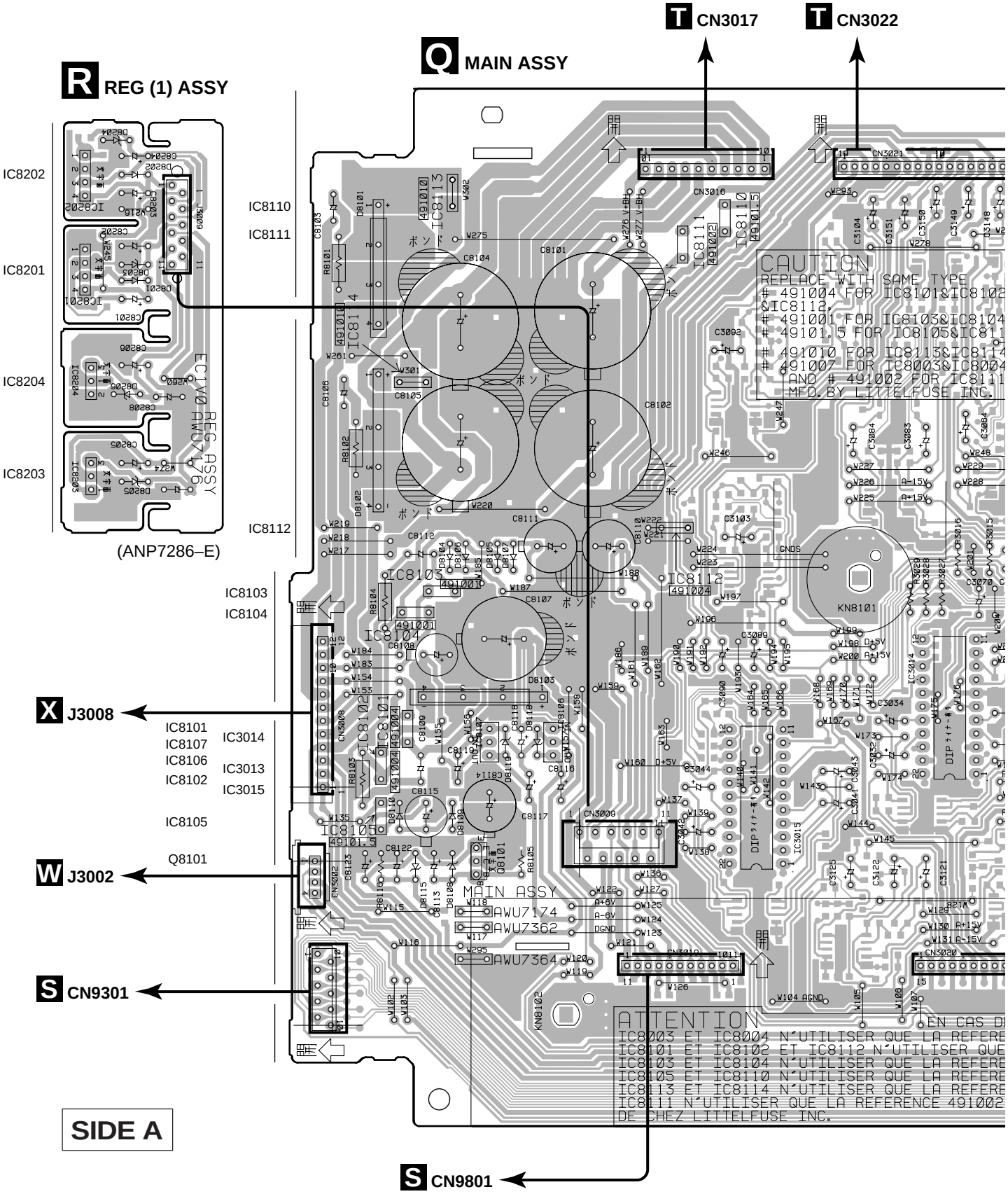

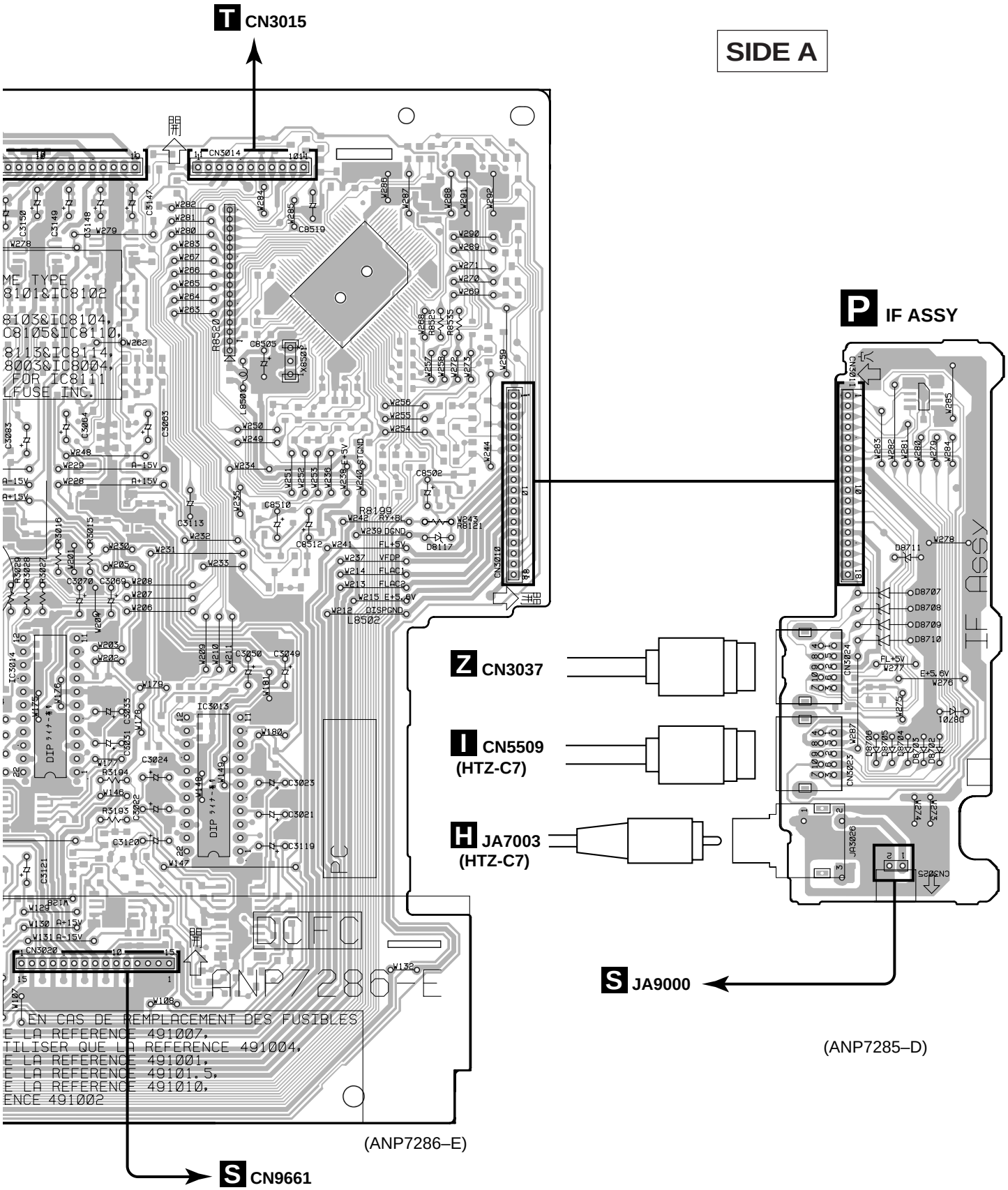
T CN3015
SIDE A
P IF ASSY
Z CN3037
I CN5509
(HTZ-C7)
H JA7003
(HTZ-C7)
S JA9000
(ANP7285–D)
(ANP7286–E)
S CN9661

SIDE B

P IF ASSY

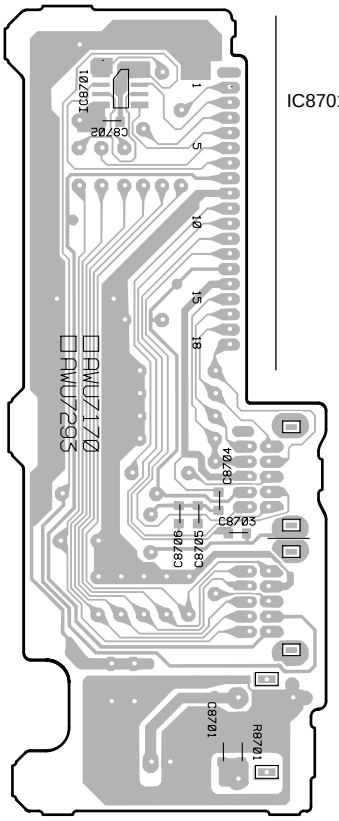

(ANP7285–D)

Q MAIN ASSY

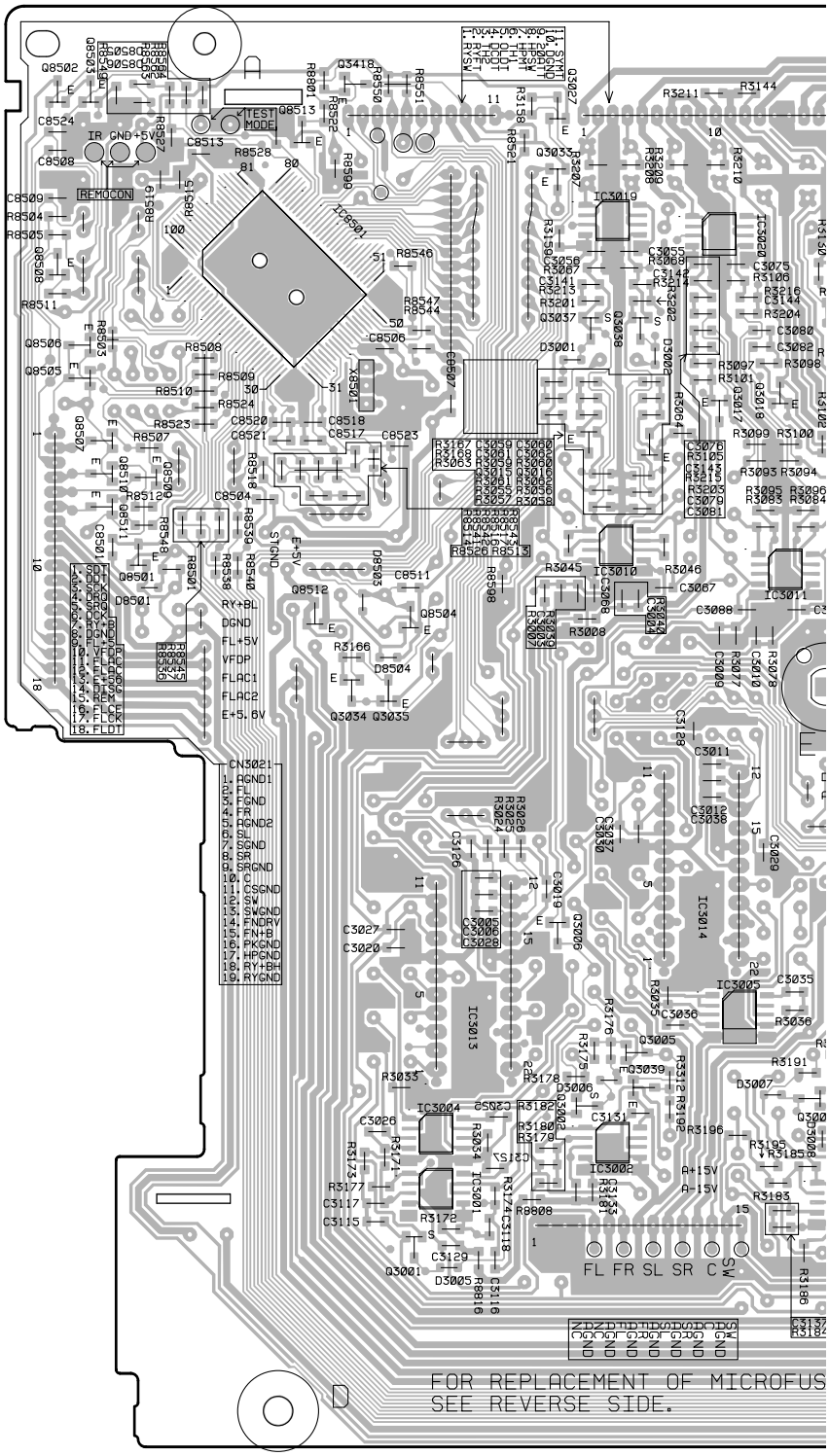

SIDE B

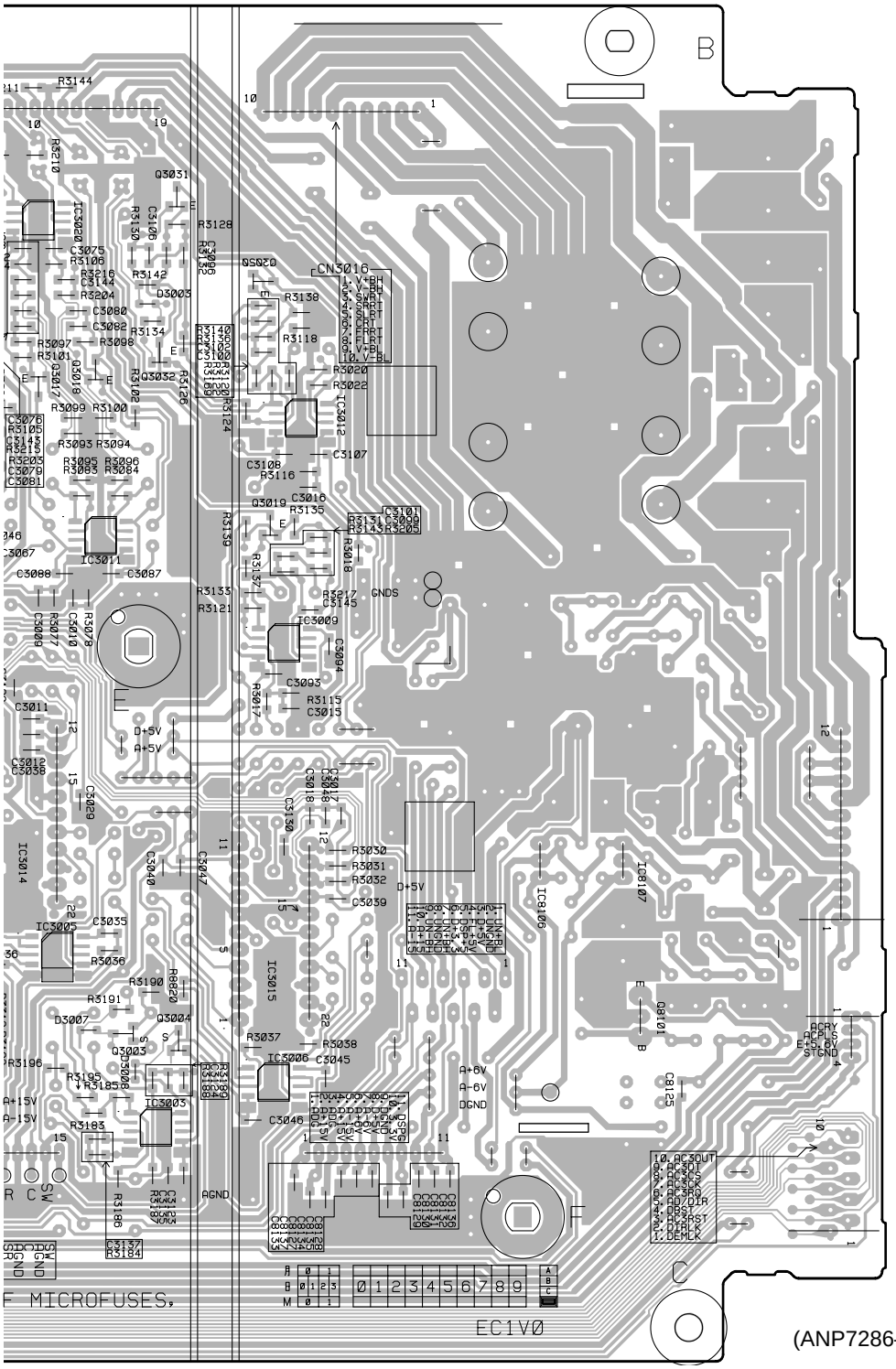

(ANP7286–E)

R REG (1) ASSY

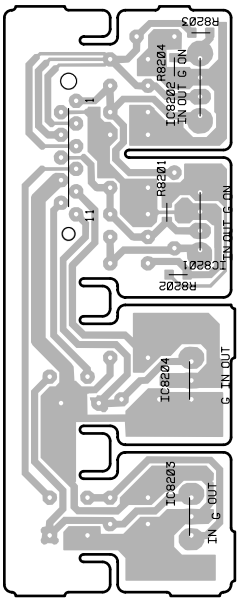

(ANP7286–E)

4.2.2 DOLBY DIG 9624 ASSY

SIDE A

Q CN3018

S DOLBY DIG 9624 ASSY

- This PCB is a four-layered board.
  Midddle layer is a mainly connected to Vcc and GND.

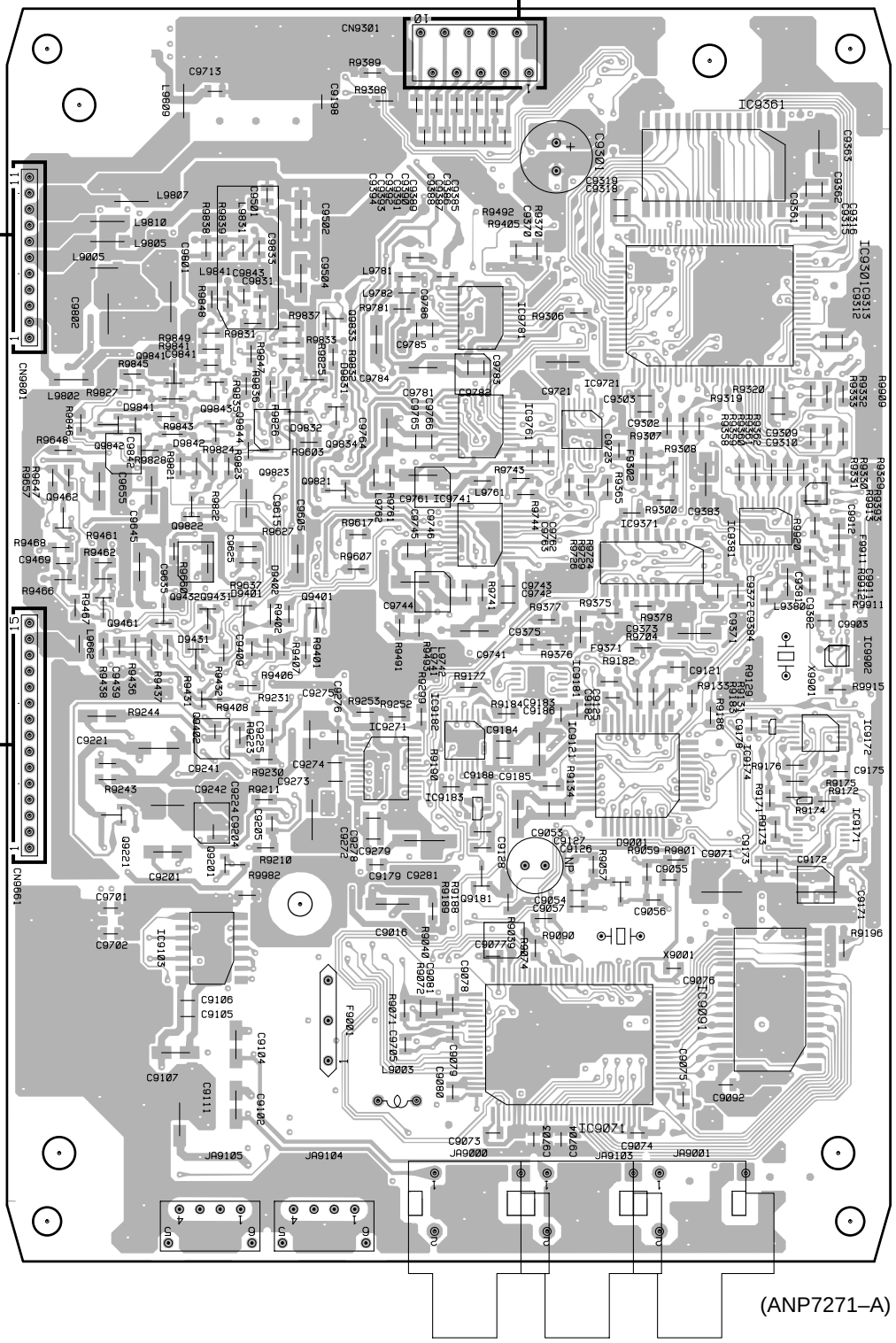

Q CN3019

Q CN3020

IC9361
IC9781 IC9301
Q9833
Q9841
Q9843
Q9842 Q9834
Q9844 IC9761 IC9721
Q9823
Q9821
Q9822
Q9462
IC9741 IC9381
IC9371
Q9432
Q9461 Q9401
Q9431
IC9902
IC9181
Q9402
IC9172
IC9182 IC9174
IC9271 IC9121
IC9183
Q9221
IC9171
Q9201
Q9181
IC9103
IC9091
IC9071

(ANP7271–A)

P CN3025

SIDE B

S DOLBY DIG 9624 ASSY

- This PCB is a four-layered board.
  Midddle layer is a mainly connected to Vcc and GND.

Q9301
IC9501
Q9832
IC9471 Q9831
IC9601
Q9302 IC9641
Q9304
IC9193 IC9441
Q9651
IC9621
Q9901 Q9641
IC9411
Q9631
Q9601 Q9611
IC9901 Q9621
Q9741
Q9191
IC9173 IC9221
IC9191 Q9271
IC9201
Q9242
Q9241
IC9192
IC9401
Q9004
Q9007
Q9032
Q9005
Q9001 Q9006 Q9003
Q9002
Q9031

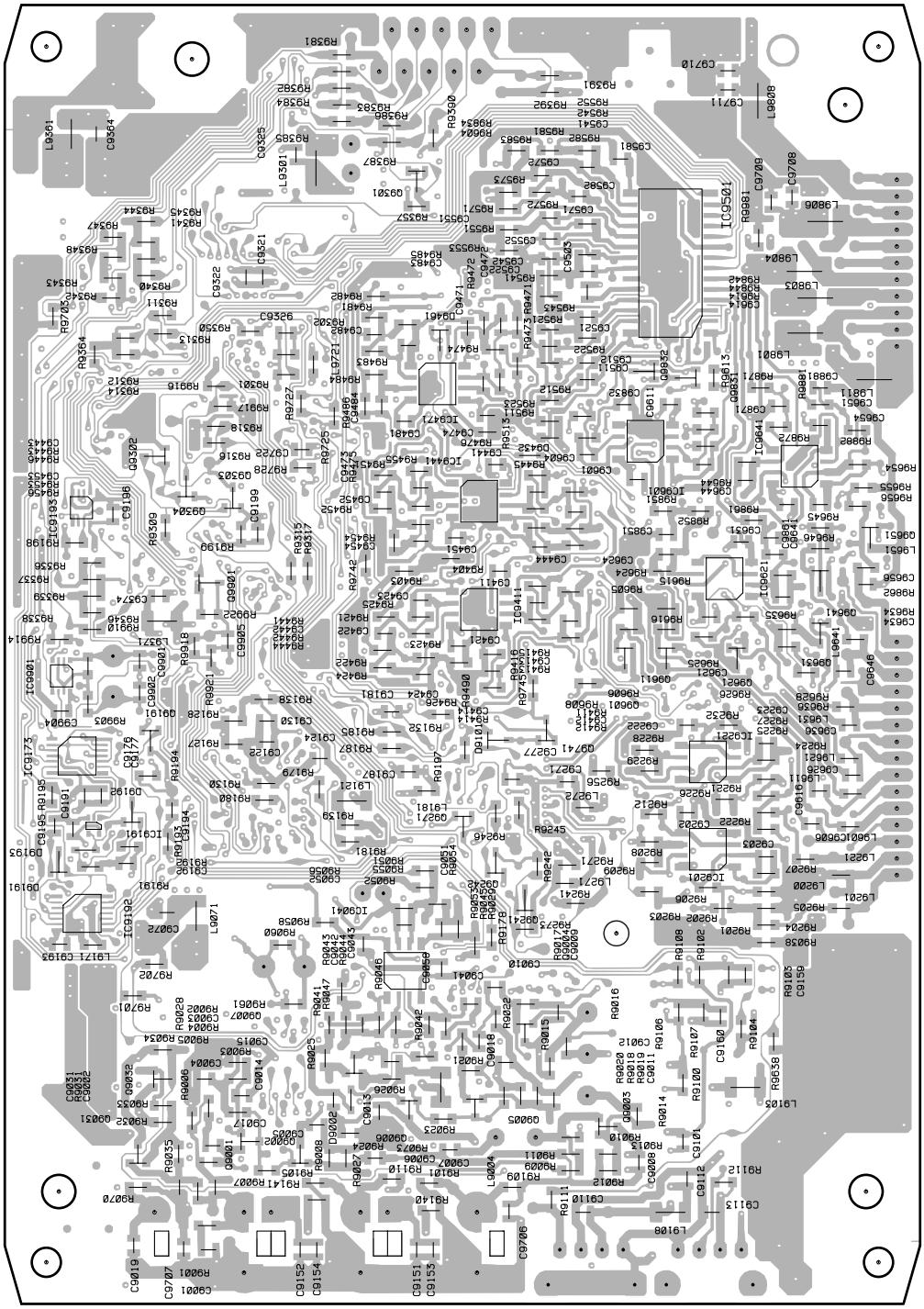

(ANP7271–A)

4.2.3 AMP ASSY, SWF ASSY and HP ASSY

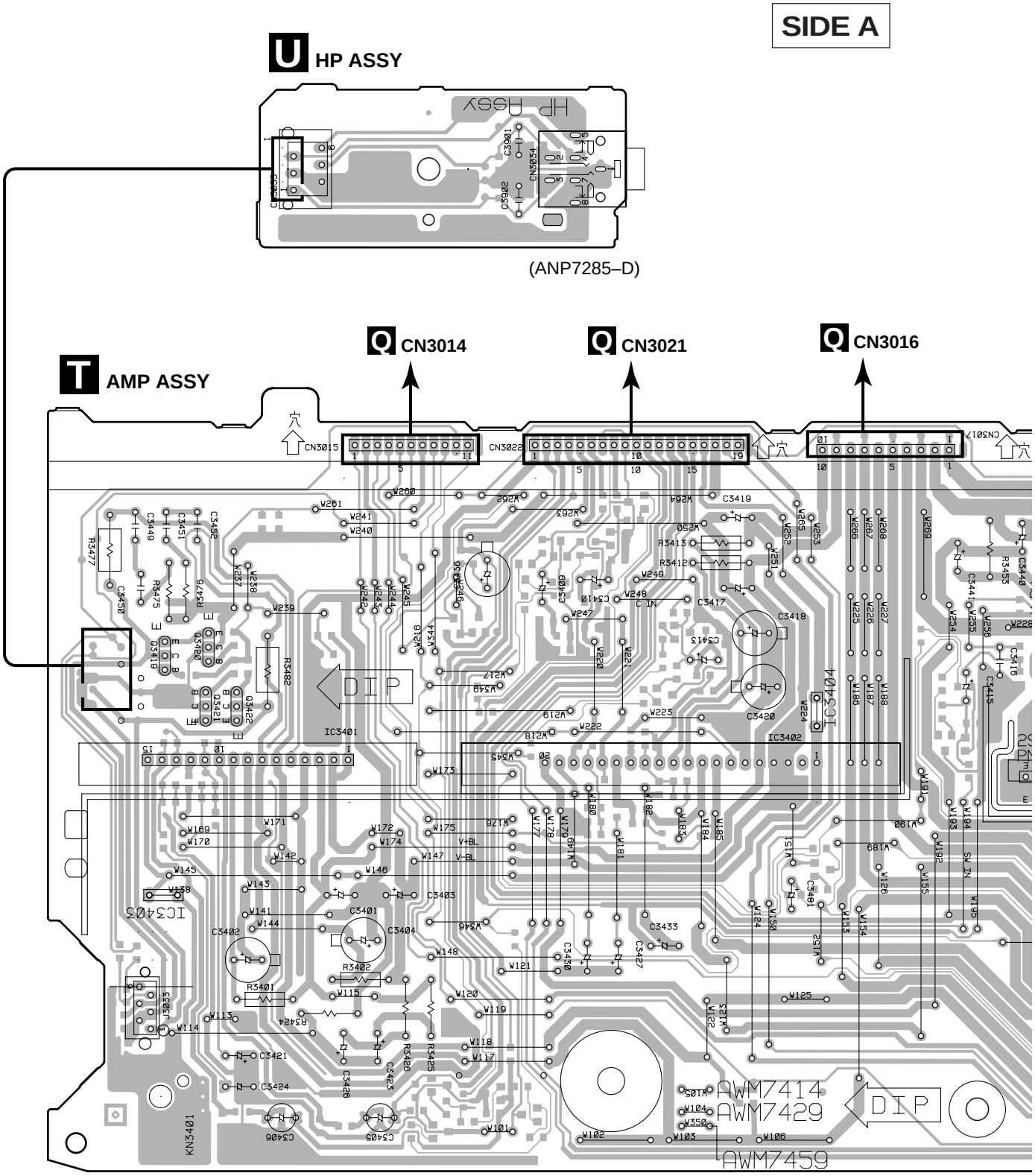

Q3419–Q3422 IC3401 IC3402

IC3403

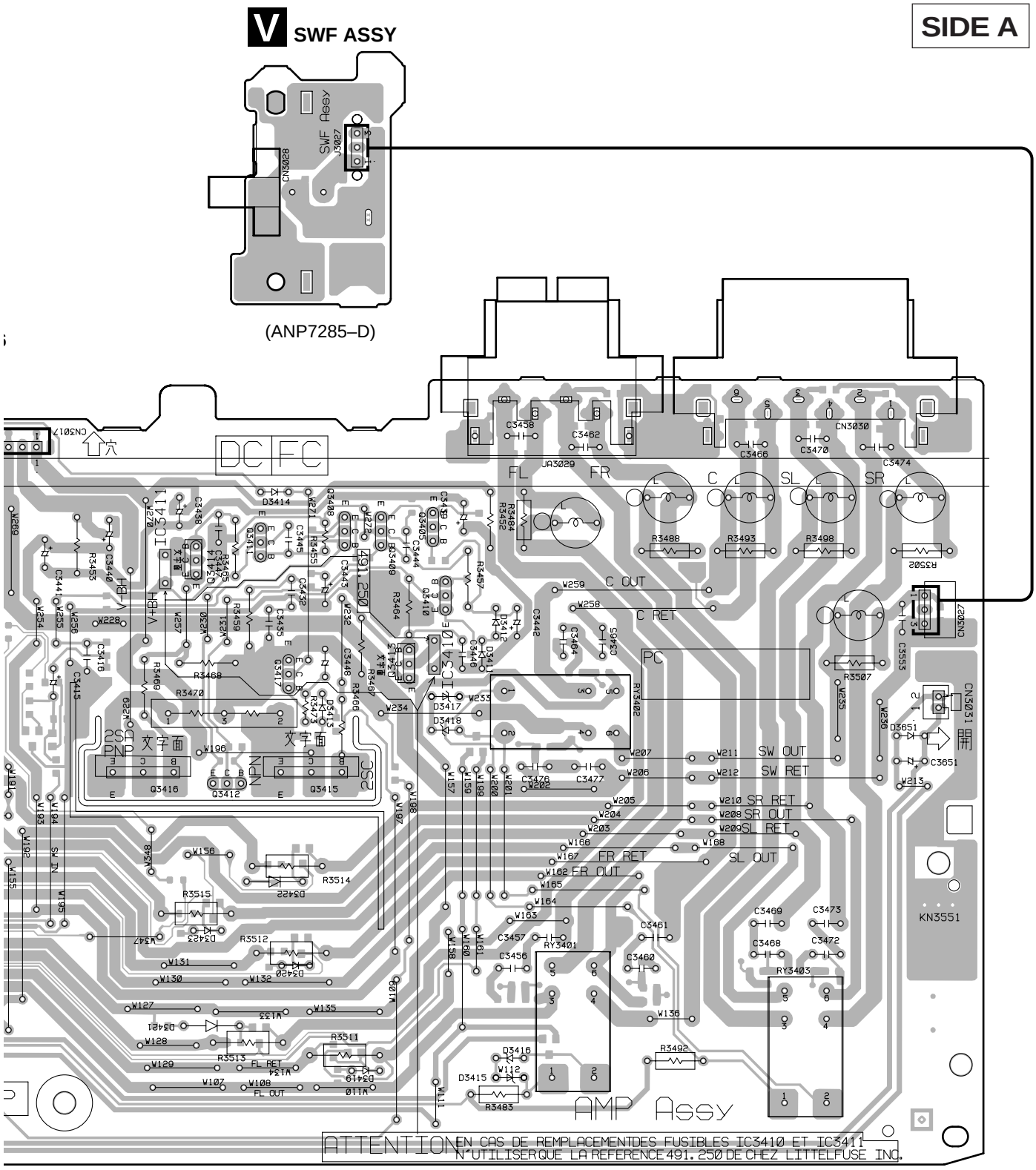

IC3411 Q3414 Q3411 Q3408 Q3409 Q3405
Q3410
Q3417 Q3413 IC3410
Q3416 Q3412 Q3415

(ANP7285–D)

SIDE B

V SWF ASSY

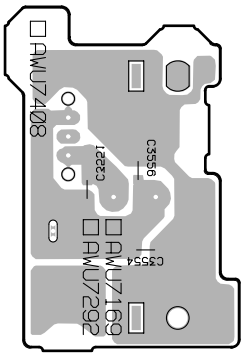

(ANP7285–D)

T AMP ASSY

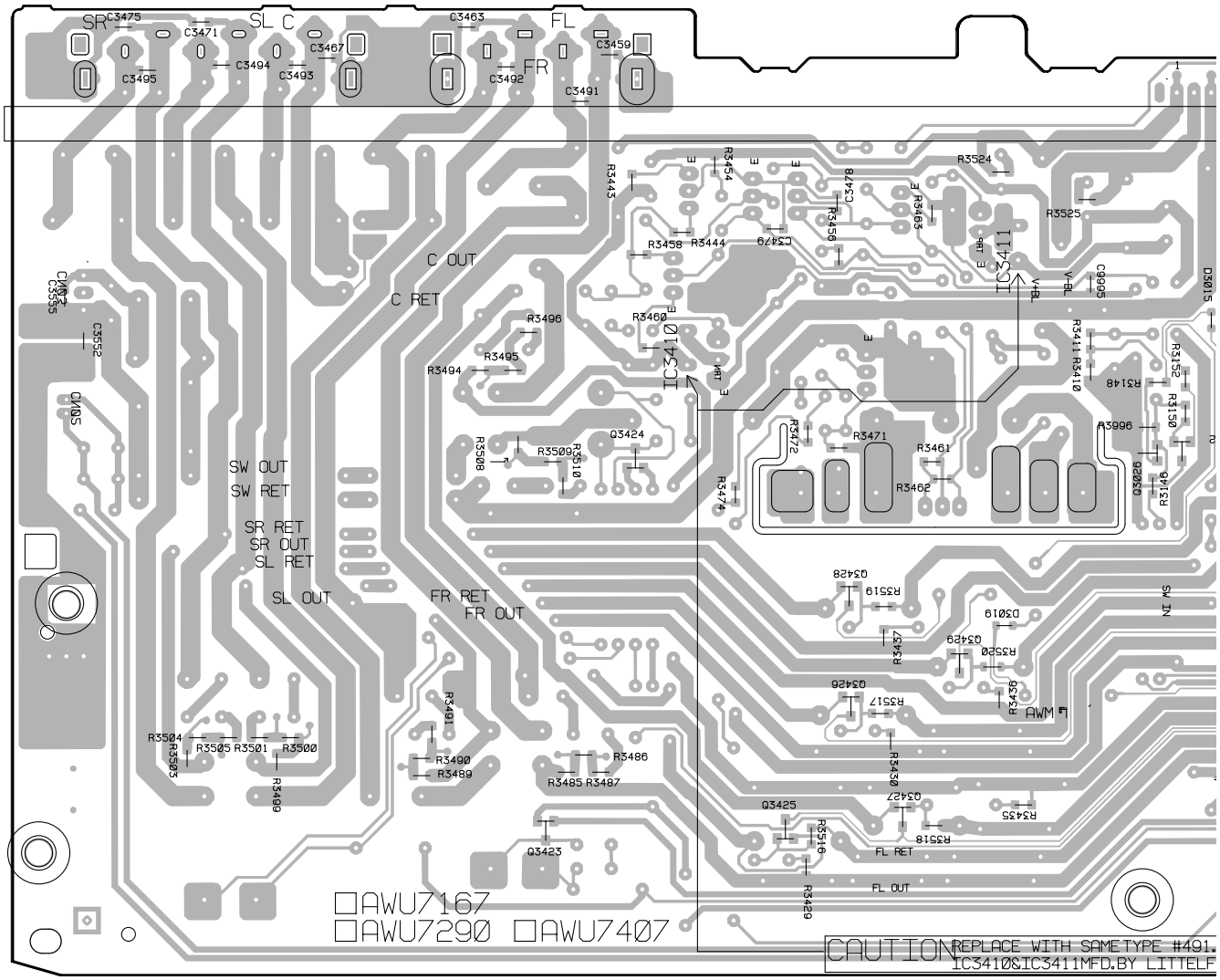

Q3424 Q3428 Q3026 Q3032

Q3423 Q3425 Q3426 Q3427 Q3429

SIDE B

U HP ASSY

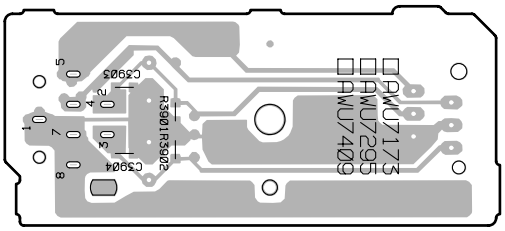

(ANP7285–D)

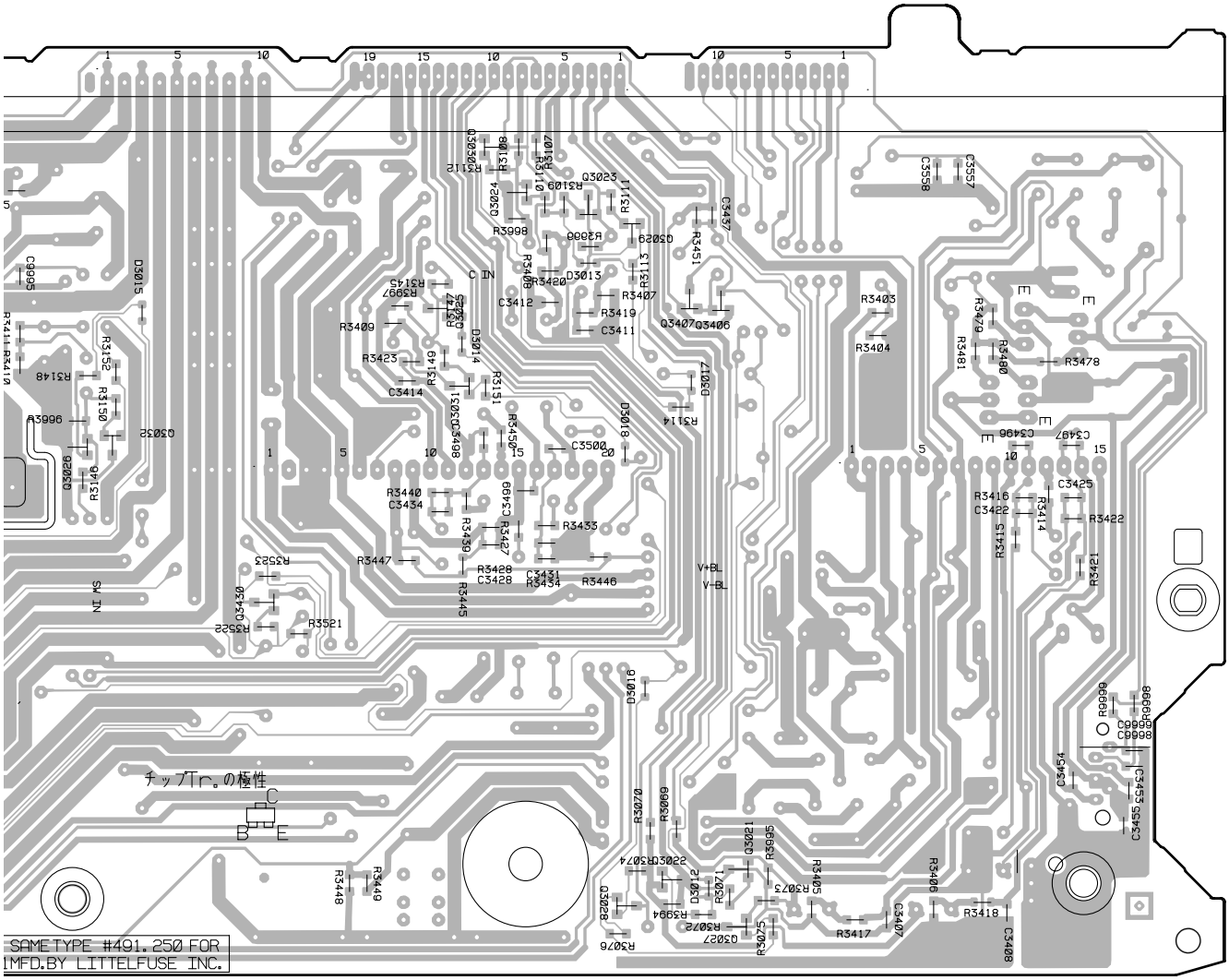

Q3030 Q3024 Q3023 Q3029

Q3026 Q3032 Q3025 Q3031 Q3407 Q3406

Q3430 Q3028 Q3022 Q3027 Q3021

(ANP7285–D)

4.2.4 POWER SUPPLY ASSY, SECONDARY ASSY and PRIMARY ASSY

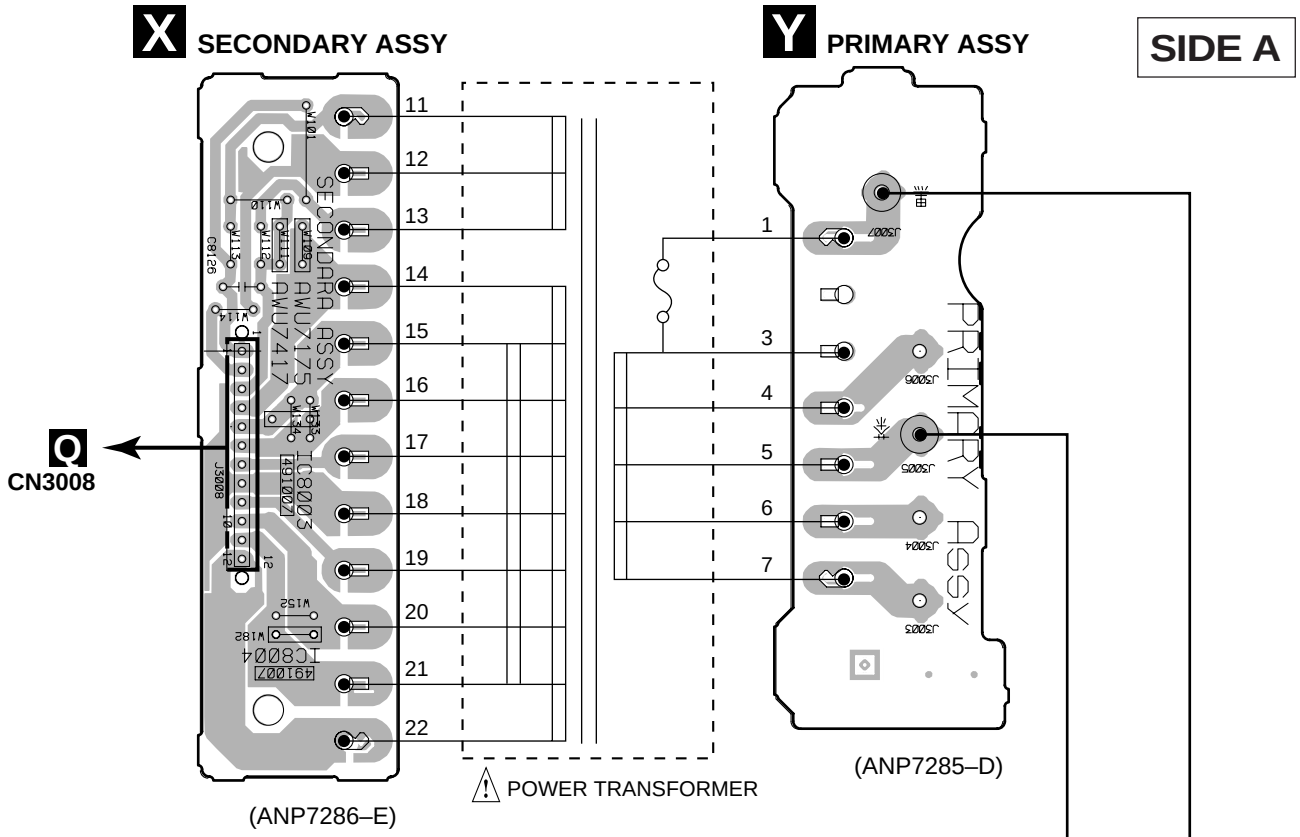

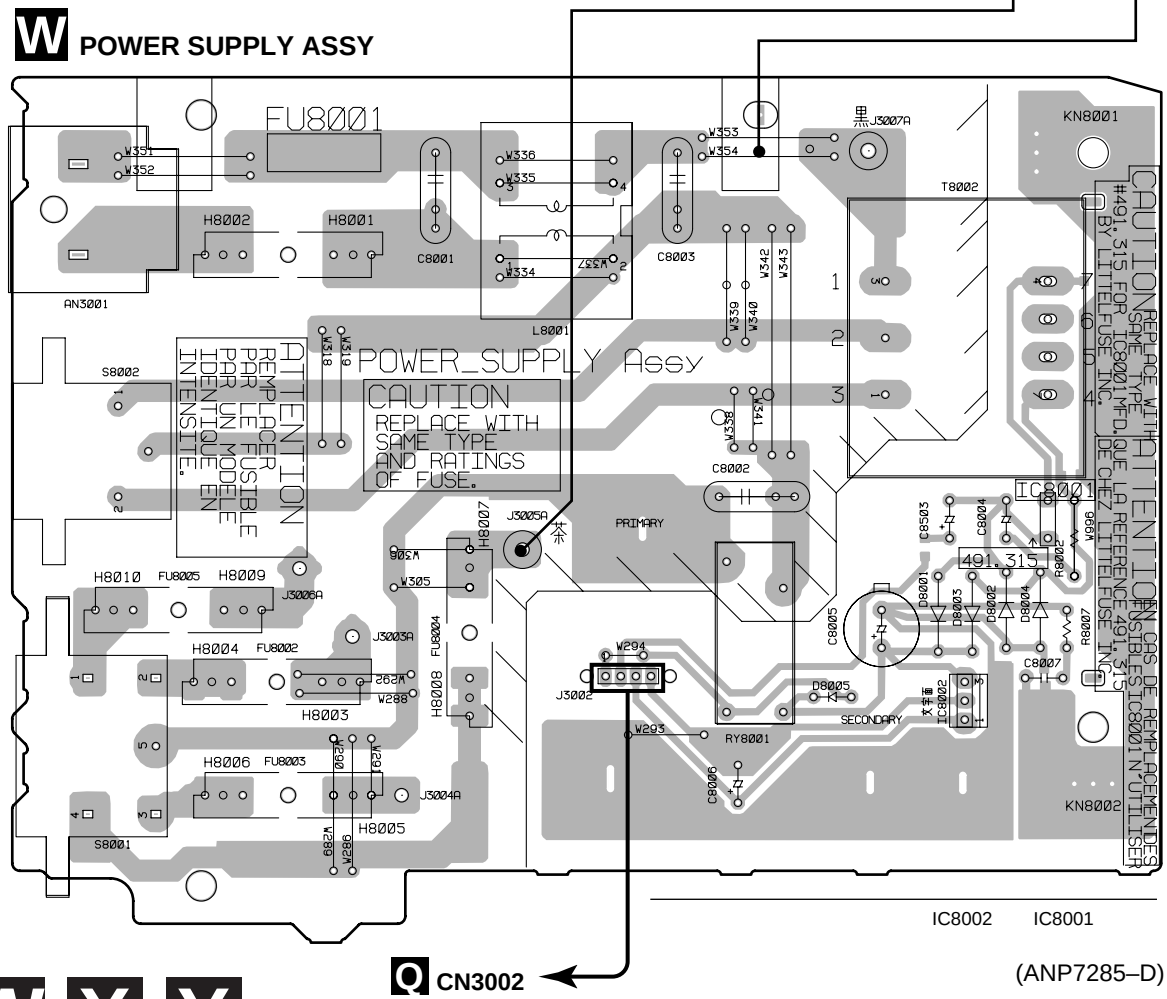

NOTE FOR PCB DIAGRAMS:

1. Part numbers in PCB diagrams match those in the schematic diagrams.
2. A comparison between the main parts of PCB and schematic diagrams is shown below.

Symbol in PCB Diagrams	Symbol in Schematic Diagrams	Part Name
B C E	B C E B C E	Transistor
B C E	B C E B C E	Transistor with resistor
D G S	D G S D G S	Field effect transistor

Symbol in PCB Diagrams	Symbol in Schematic Diagrams	Part Name
		Resistor array
		3-terminal regulator

3. The parts mounted on this PCB include all necessary parts for several destination.
   For further information for respective destinations, be sure to check with the schematic diagram.
4. Viewpoint of PCB diagrams

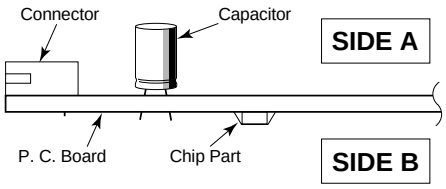

W POWER SUPPLY ASSY

SIDE B

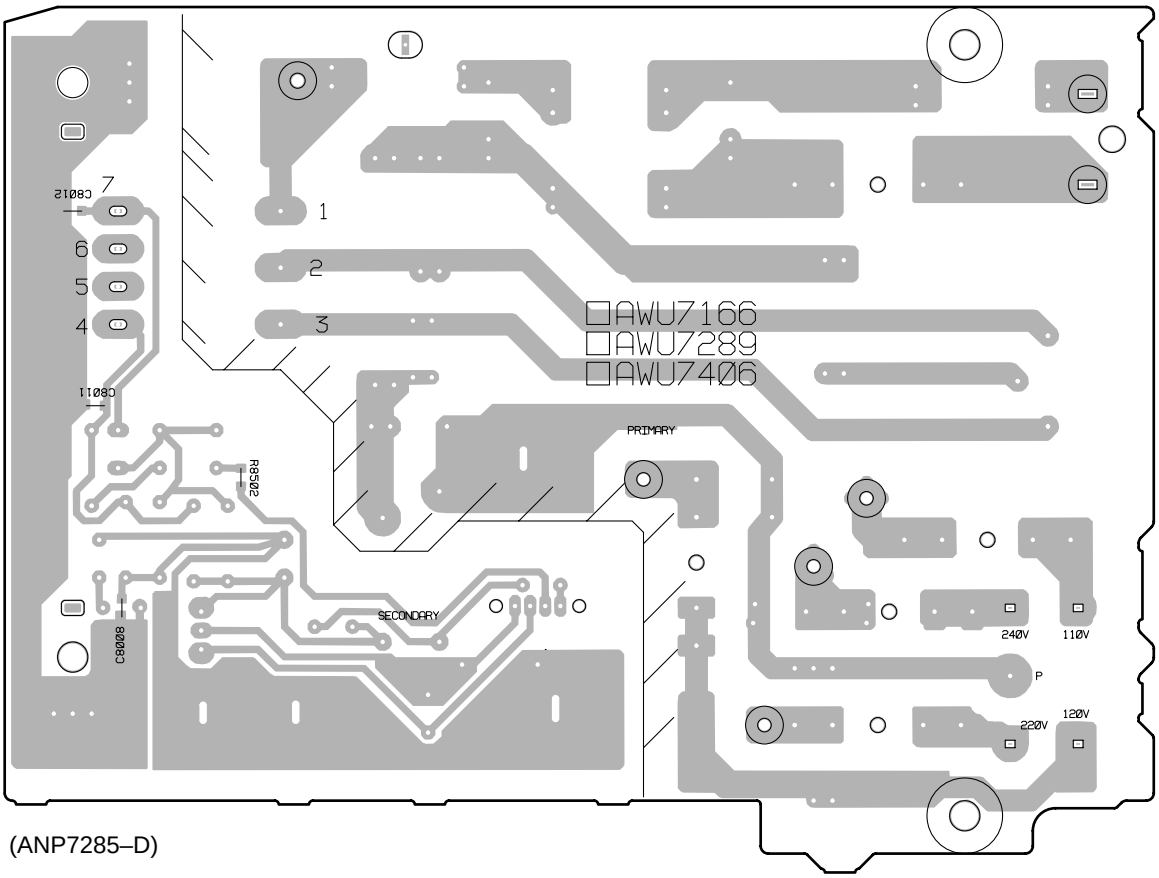

(ANP7285–D)

4.2.5 CNB ASSY and FLDP ASSY (DISPLAY UNIT)

SIDE A

AA FLDP ASSY

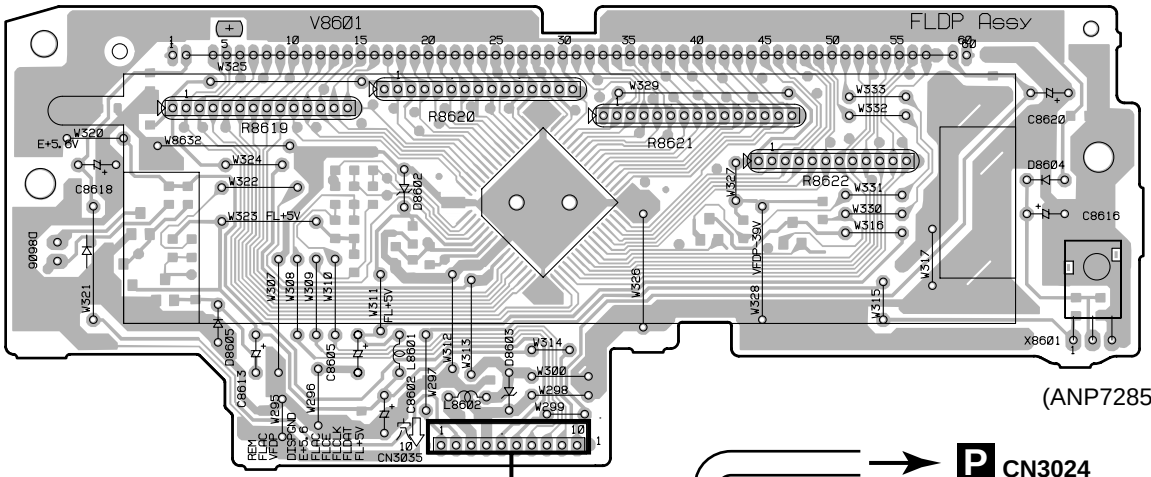

(ANP7285–D)

P CN3024

Z CNB ASSY

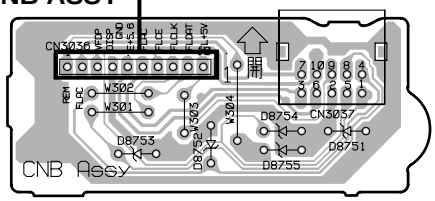

(ANP7285–D)

SIDE B

AA FLDP ASSY

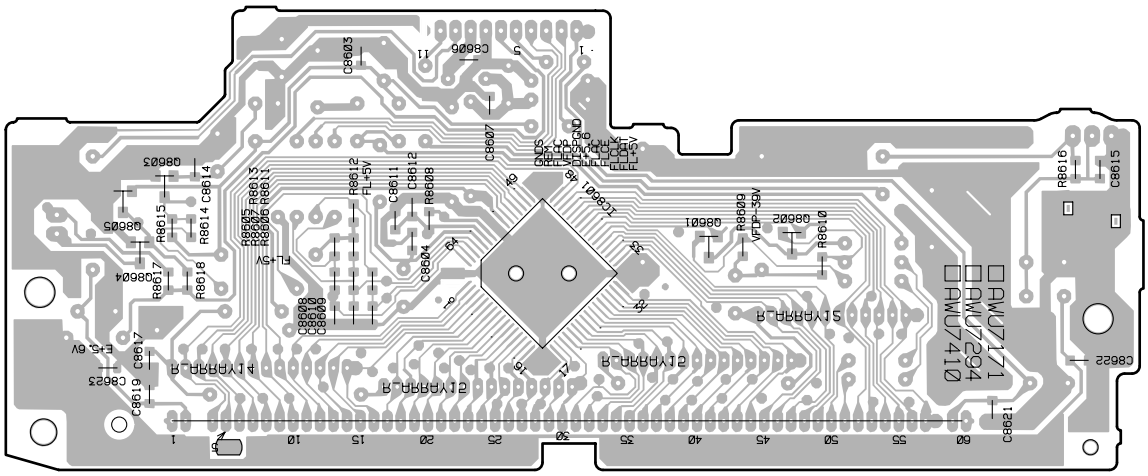

Q8605 Q8604 Q8603 IC8601 Q8601 Q8602

(ANP7285–D)

5. PCB PARTS LIST

NOTES :
- *Parts marked by "* NSP *" are generally unavailable because they are not in our Master Spare Parts List.*
- *The ⚠ mark found on some component parts indicates the importance of the safety factor of the part. Therefore, when replacing, be sure to use parts of identical designation.*
- *When ordering resistors, first convert resistance values into code form as shown in the following examples.*

Ex. 1 *When there are 2 effective digits (any digit apart from 0), such as 560 ohm and 47k ohm (tolerance is shown by J = 5%, and K = 10%).*

560 Ω → 56 × 10¹ → 561 ..... *RD1/4PU* 5 6 1 *J*
47k Ω → 47 × 10³ → 473 ..... *RD1/4PU* 4 7 3 *J*
0.5 Ω → R50 ..... *RN2H* R 5 0 *K*
1 Ω → 1R0 ..... *RS1P* 1 R 0 *K*

Ex. 2 *When there are 3 effective digits (such as in high precision metal film resistors).*

5.62k Ω → 562 × 10¹ → 5621 ..... *RN1/4PC* 5 6 2 1 *F*

5.1 DVD CENTER UNIT (HTZ-C7)

LIST OF PCB ASSEMBLIES

Mark	No.	Description	Part No.
NSP		CVDB ASSY	AWM7457
		├ SVIDEO ASSY	AWU7401
		└ VIDEO ASSY	AWU7402
NSP		CPCB ASSY	AWM7458
		├ FRONT (1) ASSY	AWU7163
		├ FRONT (2) ASSY	AWU7164
		├ LAMP ASSY	AWU7165
		├ MOTHER ASSY	AWU7403
		├ POWER MAIN ASSY	AWU7404
		├ POWER SUB ASSY	AWU7287
		└ AC ASSY	AWU7405
		FM/AM TUNER MODULE	AXQ7058
		DVDM ASSY	VWS1364
NSP		LOADING MECHANISM ASSY	VWT1147
NSP		├ LOAB ASSY	VWM1798
NSP		│ ├ LOSB ASSY	VWG1885
NSP		│ └ LOMB ASSY	VWG1886
NSP		└ SERVO MECHANISM ASSY	VWT1148
NSP		└ SMEB ASSY	VWM1797
NSP		├ INSB ASSY	VWG1883
NSP		└ FGSB ASSY	VWG1884

H SVIDEO ASSY

SEMICONDUCTORS

Mark	No.	Description	Part No.
		IC7006	AK5351–VF
		IC7002, IC7004, IC7005	BA4558F–HT
		IC7503	BU4053BCF
		IC7003, IC7701	BU4094BCF
		IC7501, IC7502	MM1112XF
		IC7505	NJM2534M
		IC7504	NJM2535M
		IC7001	PD2026BM (L)
		IC7017	TC74HC02AF
		IC7010	TC74HC153AF
		IC7011	TC74HCU04AF
		IC7007	TC7W74F
		IC7013–IC7015	TC7WU04F
		IC7008	TC9271F
		Q7003, Q7004, Q7501, Q7509	2SA1037K
		Q7502, Q7507, Q7508	2SC2412K
		Q7001, Q7002, Q7013–Q7016	2SD2114K
		Q7007, Q7017	DTA124EK
		Q7019, Q7505, Q7506	DTA143EK
		Q7005, Q7006	DTC124EK
		Q7503, Q7504	DTC143EK
		D7501–D7505	1SS355

COILS AND FILTERS

Mark	No.	Description	Part No.
		F7001, F7002	ATF7013
		F7501	DTF1069
		L7001–L7005, L7007, L7008, L7011 (100 MHz)	OTL1040
		L7014–L7019, L7022 (100 MHz)	OTL1040
		L7023	PTL1003
		L7010	RTF1167
		L7020, L7021	VTL1098

CAPACITORS

Mark	No.	Description	Part No.
		C7012, C7013, C7085	CCSQCH101J50
		C7031, C7032	CCSQCH220J50
		C7047, C7509–C7511	CCSQCH221J50
		C7102	CCSQCH270J50
		C7044	CCSQCH271J50
		C7014–C7017, C7099, C7106, C7107	CCSQCH470J50
		C7098, C7103	CCSQCH560J50
		C7104	CCSQCH6R0D50
		C7096, C7097, C7101	CCSQCH7R0D50
		C7027, C7028, C7515, C7523	CEAT100M50
		C7008, C7010, C7040, C7042, C7053	CEAT101M10
		C7058, C7060, C7067, C7078, C7088	CEAT101M10
		C7039	CEAT221M6R3
		C7022, C7024–C7026, C7126, C7127	CEAT330M16
		C7513, C7517, C7527, C7534	CEAT330M16

Mark	No.	Description	Part No.
	C7501, C7505		CEAT470M16
	C7003, C7050, C7530		CEAT471M6R3
	C7704		CEJA4R7M35
	C7129, C7708		CKSQYB102K50
	C7061		CKSQYB103K50
	C7035, C7036		CKSQYB152K50
	C7018, C7019		CKSQYB332K50
	C7001, C7005, C7011, C7021, C7023		CKSQYF103Z50
	C7029, C7030, C7033, C7034		CKSQYF103Z50
	C7037, C7038, C7041, C7043, C7046		CKSQYF103Z50
	C7051, C7052, C7057, C7059, C7068		CKSQYF103Z50
	C7079, C7080, C7082, C7086		CKSQYF103Z50
	C7089, C7090, C7093, C7095, C7105		CKSQYF103Z50
	C7110–C7112, C7118, C7119, C7125		CKSQYF103Z50
	C7512, C7516, C7518–C7521		CKSQYF103Z50
	C7524–C7526, C7528, C7532, C7533		CKSQYF103Z50
	C7535, C7537		CKSQYF103Z50
	C7004, C7006, C7007, C7009, C7048		CKSQYF104Z25
	C7100, C7503, C7504, C7507, C7508		CKSQYF104Z25
	C7002, C7081, C7121–C7124		CKSQYF105Z16
	C7071, C7705		CKSQYF473Z50
	C7538		CKSQYF474Z16
	VC7001 (20 pF)		VCM–008
RESISTORS			
	R7066 (330 Ω)		ACN7054
	R7001, R7002 (220 Ω)		DCN1093
	R7057, R7058, R7109, R7110		RN1/10SE1002D
	R7025–R7028		RN1/10SE4702D
	Other Resistors		RS1/10S □□□J
OTHERS			
	CN7501	14P FFC CONNECTOR	9604S–14C
	CN7005	17P FFC CONNECTOR	9604S–17C
	7001, 7003	PIN JACK (1P)	AKB7035
	CN7503	DIN SOCKET (4P ×2)	AKP7020
	CN7504	DIN SOCKET (4P)	AKP7045
	X7001	(16.9344 MHz)	ASS1073
	CN7002	KR CONNECTOR	B4B–PH–K–S
	JA7002	OPTICAL RECEIV MOD.	GP1F32R
	JA7005	OPTICAL LINK OUT	GP1F32T
	X7002	(18.432 MHz)	RSS1052
	CN7004	14P FFC CONNECTOR	VKN1245
	CN7502	17P FFC CONNECTOR	VKN1248
	KN7001–KN7003, KN7501		VNF1084
		EARTH METAL FITTING	

G VIDEO ASSY

Mark	No.	Description	Part No.
SEMICONDUCTORS			
	IC7801		MM1112XF
	IC7802		NJM2535M
	Q7803		2SA1037K
	Q7801		2SC2412K
	D7801, D7802, D7805		1SS355
SWITCHES AND RELAYS			
	S7801		VSH1020
CAPACITORS			
	C7806, C7813		CEAT330M16
	C7801, C7803		CEAT470M16
	C7816		CEAT471M6R3
	C7808, C7809		CEJA100M16
	C7805, C7812, C7814, C7825, C7899		CKSQYF103Z50
	C7811		CKSQYF104Z25
	C7897		CKSQYF474Z16
RESISTORS			
	All Resistors		RS1/10S □□□J
OTHERS			
	CN7801	14P FFC CONNECTOR	9604S–14C
	JA7802	PIN JACK (1P)	AKB7096
	JA7801	PIN JACK (2P)	VKB1094
	7801	PCB HOLDER (S)	VNE1952

M FRONT (1) ASSY

Mark	No.	Description	Part No.
SEMICONDUCTORS			
	Q5902		DTC143EK
SWITCHES AND RELAYS			
	S5901–S5905		VSG1009
RESISTORS			
	All Resistors		RS1/10S □□□J
OTHERS			
	CN5901	7P FFC CONNECTOR	52044–0745
	J5903	3P JUMPER WIRE	D20PWW0310E
	J5902	4P JUMPER WIRE	D20PWW0420E

N FRONT (2) ASSY

Mark	No.	Description	Part No.
SEMICONDUCTORS			
	D5901		SLP9118C51H
SWITCHES AND RELAYS			
	S5906–S5908, S5910		VSG1009
RESISTORS			
	All Resistors		RS1/10S □□□J

O LAMP ASSY

Mark	No.	Description	Part No.
SEMICONDUCTORS			
	Q5903		DTD113ES
	D5903		1SS254
OTHERS			
	PL5901	LAMP (DVD)	VEL1022

Mark	No.	Description	Part No.
I	**MOTHER ASSY**		
	SEMICONDUCTORS		
	IC5002		BA4558F-HT
	IC5701		BU1923F
	IC5004		BU4066BCF
	IC5501		PDG251A
	IC5601		TC7W04F
	IC5001		TC9164AF
	Q5505		2SA1037K
	Q5003, Q5004, Q5512, Q5513		2SC2412K
	Q5603, Q5604		2SC2412K
	Q5007–Q5009		2SD2114K
	Q5507, Q5510, Q5601		DTA124EK
	Q5504		DTA143EK
	Q5501–Q5503, Q5508, Q5509, Q5511		DTC124EK
	Q5602		DTC124EK
	D5502		11EQS06
	D5001, D5002, D5005, D5503, D5506		1SS254
	D5508, D5601, D5608, D5622, D5636		1SS254
	D5003, D5509, D5616, D5617		1SS355
	D5632, D5633, D5637, D5638		1SS355
	D5629, D5630		MTZJ5.1B/C
	D5602–D5607, D5619, D5620		MTZJ8.2B
	D5635		UDZS8.2B
	COILS AND FILTERS		
	L5501		LAU220J
	L5601		LAU2R2J
	CAPACITORS		
	C5520 (1F/16V)		ACH1246
	C5001–C5008, C5043–C5055		CCSQCH101J50
	C5057, C5058, C5502–C5504, C5507		CCSQCH221J50
	C5514, C5517, C5615, C5616		CCSQCH221J50
	C5704, C5705		CCSQCH270J50
	C5707		CCSQCH271J50
	C5011, C5012		CCSQCH330J50
	C5534–C5537		CCSQCH471J50
	C5706		CCSQCH561J50
	C5708		CEAT100M50
	C5510, C5605–C5607		CEAT101M10
	C5029, C5524		CEAT1R0M50
	C5032, C5522		CEAT220M25
	C5009, C5010		CEAT2R2M50
	C5033, C5034, C5702		CEAT330M16
	C5015, C5016		CEAT470M10
	C5056, C5501, C5511, C5519, C5525		CKSQYB102K50
	C5528, C5531–C5533, C5538, C5601		CKSQYB102K50
	C5622		CKSQYB102K50
	C5013, C5014, C5037–C5042		CKSQYF103Z50
	C5508, C5509, C5512, C5515, C5518		CKSQYF103Z50
	C5529, C5530, C5604, C5611–C5614		CKSQYF103Z50
	C5617, C5703		CKSQYF103Z50
	C5516		CKSQYF104Z50
	C5023, C5513, C5521, C5523, C5527		CKSQYF473Z50
	C5602		CKSQYF473Z50

Mark	No.	Description	Part No.
	RESISTORS		
	R5801		RA4T103J
	R5803		RA5T103J
	R5053, R5056		RD1/2VM431J
	R5522		RS1/10S1801F
	Other Resistors		RS1/10S□□□J
	OTHERS		
	CN5505	7P FFC CONNECTOR	52492–0720
	CN5503	17P FFC CONNECTOR	9604S–17C
	JA5508	PIN JACK (2P)	AKB7107
	JA5507, JA5509	PIN JACK (4P)	AKB7108
	CN5509	10P MINI DIN SOCKET	AKP7031
	X5701		ASS7004
	X5501	(16 MHz)	ASS7020
	CN5504	14P PLUG	KM200IA14
	JA5510	REMOTE CONTROL JACK	RKN1004
	CN5508	KR CONNECTOR	S2B–PH–K–S
	CN5506, CN5507	7P FFC CONNECTOR	VKN1211
	CN5501	12P FFC CONNECTOR	VKN1216
	CN5502	14P FFC CONNECTOR	VKN1274
J	**POWER MAIN ASSY**		
	SEMICONDUCTORS		
⚠	IC11 (4A/125V)		AEK7018
⚠	IC18 (200mA/125V)		AEK7023
⚠	IC14		NJM78M56FA
	Q17, Q19, Q25		2SA1037K
	Q16, Q18, Q24		2SC2412K
⚠	Q20		2SD2395
	Q11		DTC114EK
	D1		1SS254
⚠	D13		D2SBA20 (B)
⚠	D11, D12		D3SBA20 (B)
	D14, D16, D18		MTZJ15A
	D17		MTZJ8.2B
	SWITCHES AND RELAYS		
⚠	RY1		RSR1037
	CAPACITORS		
	C15, C19, C82, C83		CEAT101M10
	C27, C70		CEAT101M16
⚠	C12		CEAT103M10
	C30		CEAT221M16
	C14		CEAT331M25
⚠	C13		CEAT682M25
	C24, C29		CEJA101M10
	C51, C52		CFTLA223J50
	C16, C20, C23, C26, C28		CKSQYF103Z50
	C53, C55, C56		CKSQYF103Z50
	C99		CKSQYF105Z16
	C50		CQMA223K2E
⚠	C11 (6800 μF/16V)		VCH1060

Mark	No.	Description	Part No.
RESISTORS			
	Other Resistors		RS1/10S □□□J
OTHERS			
⚠	11	CABLE HOLDER (13P)	51063–1305
		SCREW	BBZ30P080FCC
	J12	JUMPER WIRE	D15A13–125–2651
	CN11	12P FFC CONNECTOR	VKN1188
	KN1, KN11	EARTH METAL FITTING	VNF1084

K POWER SUB ASSY

Mark	No.	Description	Part No.
SEMICONDUCTORS			
⚠	IC17 (500mA/125V)		AEK7005
⚠	IC16 (1A/125V)		AEK7009
⚠	Q13, Q15, Q21, Q23		2SB1566
	Q12, Q22		2SC2412K
RESISTORS			
	All Resistors		RS1/10S □□□J
OTHERS			
⚠	12	CABLE HOLDER (13P)	51063–1305

L AC ASSY

Mark	No.	Description	Part No.
COILS AND FILTERS			
⚠	L1		ATF–151
CAPACITORS			
⚠	C1, C2 (0.01 µF/250V)		ACG7010
OTHERS			
⚠	AN1	POWER SOCKET	BKP1046
	H1, H2	FUSE CLIP	AKR1003
	J1	LEAD WIRE UNIT	DB415NB2

F FM/AM TUNER MODULE

Mark	No.	Description	Part No.
SEMICONDUCTORS			
	IC6201		LA1832ML
	IC6202		LC72131MD
	Q6102		2SC2223
	Q6203		2SC2705
	Q6201, Q6202		2SC2712
	Q6103, Q6214, Q6601		2SC2714
	Q6104, Q6105		2SK302
	Q6101		3SK194
	Q6204		DTA124ES
	Q6205		DTC124EK
	D6202		1SS254
	D6101–D6104		1SV228
COILS AND FILTERS			
	L6106		ATC1003
	L6105		ATC1015
	L6101		ATC1016
	L6102		ATC1017
	L6103		ATC1018
	L6104		ATC1019
	F6203		ATF-119
	F6206		ATF7008
	F6601		ATF7009
	F6204		ATF7010
	F6202	(455kHz)	ATF7011
	L6107	(2.2µH)	ATH1043
	L6603		LAU220J
	L6206, L6208, L6605		LAU2R2J
	TRANSFORMERS		
	T6201		ATB7008
	T6101		ATE7002
CAPACITORS			
	C6113, C6212, C6274, C6275, C6611		CCSQCH101J50
	C6116, C6208, C6221		CCSQCH150J50
	C6222		CCSQCH180J50
	C6271		CCSQCH200J50
	C6117		CCSQCH330J50
	C6608		CCSQCH680J50
	C6118		CCSQCH8R0D50
	C6111, C6122		CCSQCK1R0C50
	C6112, C6127		CCSQCK2R0C50
	C6105		CCSQSL471J50
	C6101		CCSQTH110J50
	C6119		CCSQTH150J50
	C6109		CCSQTH270J50
	C6107, C6110		CCSQTH300J50
	C6106		CCSQTH330J50
	C6234, C6235		CEAL1R0M50
	C6245		CEAL470M16
	C6224		CEAS100M50
	C6243		CEAS101M16
	C6231		CEAS1R0M50
	C6227		CEAS220M16
	C6236		CEAS2R2M50
	C6216		CEAS330M16
	C6262		CEAS3R3M50
	C6219		CEAS470M10
	C6244		CEAS470M16
	C6249, C6250, C6265, C6266		CEAS4R7M50
	C6258		CEJA470M16
	C6215		CFTLA103J50
	C6214		CFTLA224J50
	C6115, C6125, C6126, C6211, C6254		CKSQYB102K50
	C6601		CKSQYB102K50
	C6102, C6114, C6121, C6123, C6124		CKSQYB103K50
	C6210, C6213, C6237, C6267, C6276		CKSQYB103K50
	C6279, C6281, C6604		CKSQYB103K50

Mark	No.	Description	Part No.
	C6251, C6252		CKSQYB123K50
	C6606, C6607		CKSQYB182K50
	C6203, C6259		CKSQYB223K50
	C6228		CKSQYB472K50
	C6209		CKSQYB473K50
	C6230		CKSQYB821K50
	C6218, C6223, C6255		CKSQYF103Z50
	C6220, C6226, C6242, C6256		CKSQYF223Z50
	C6225		CKSQYF473Z50
	C6610		CKSYB103K50

RESISTORS

	R6602		RD1/4PU221J
	R6115, R6119, R6123, R6127, R6129		RS1/8S0R0J
	R6906, R6909, R6911		RS1/8S0R0J
	R6112		RS1/8S473J
	VR6201 (10kΩ)		RCP1045
	Other Resistors		RS1/10S□□□ J

OTHERS

	BN6202	2P TERMINAL WITH PAL	AKA7001
	X6202	(456 kHz)	ASS1066
	X6201	(7.2000 MHz)	ASS1093
	CN6201	14P SOCKET	KP200IA14L

E DVDM ASSY

SEMICONDUCTORS

	IC171		BA10393F
	IC161		BA6195FP
	IC151		BA6797FP
	IC813		CY2081SL–611
	IC503		HD74HC573FP
	IC702		HM514800CJ–7
	IC101		LA9700M
	IC201		LC78650NE
	IC802		MB811171622A–100FN
	IC801		MB86371C
	IC815, IC816		MC14577CF
	IC271, IC302		NJM2100M
	IC203		NJM2107F
	IC601		PD3381A
	IC701		PD4833A
	IC501		PD4889A
	IC502		SRM2B256SLMX70
⚠	IC401		TA78M08F
	IC202, IC204, IC206		TC4W53F
	IC604		TC551001BFL–85
	IC804		TC74HCT541AF
	IC303		TC74HCU04AF
	IC807, IC808		TC74LCX245FT
	IC821		TC74VHC00FT
	IC814, IC820		TC74VHC02FT
	IC505, IC605		TC74VHC139FT
	IC504		TC74VHC20FT
	IC805, IC806, IC809		TC74VHC541FT
	IC506		TC74VHCT245AFT
	IC817		TC74VHCT541AFT
	IC811, IC818, IC819		TC7SHU04F
	IC810		TC7WU04F
	IC301		TLC5540INS
	IC603		VKH1012
	IC6003		VYW1632
⚠	Q401		2SB1260
	Q108		HN1K03FU
	Q455, Q831, Q832, Q851, Q852		IMT1A
	Q871, Q872		IMT1A
	Q103, Q402, Q873		IMX1
	Q102, Q104, Q291, Q301		IMZ1A
	Q106, Q603		PDTA114EK
	Q107, Q109, Q261, Q602		PDTC114EK
	Q601, Q771, Q772		PDTC114TK
	D301		KV1410
	D171, D172		MA152WK
	D601		RB501V–40

COILS AND FILTERS

	F771, F778, F779		DTF1067
	L941, L942, L945, L946		QTL1011
	F896		VTF1077
	F801 (6.0 MHz)		VTF1098
	F401–F406 (4700 pF)		VTH1037
	L301 (1.5 mH)		VTL1059
	L101, L302 (10 mH)		VTL1061
	L802, L803 (22 mH)		VTL1067
	L335, L340, L342		VTL1074
	L777, L780–L787, L895		VTL1075
	L897–L899		VTL1075

CAPACITORS

	C623		CCSRCH100D50
	C152, C208, C291, C612, C613		CCSRCH101J50
	C700, C735, C737, C739		CCSRCH101J50
	C897, C898		CCSRCH101J50
	C111, C139, C215, C231, C232		CCSRCH151J50
	C248		CCSRCH151J50
	C125, C148, C329		CCSRCH180J50
	C112, C118		CCSRCH220J50
	C121, C130, C199, C319, C324		CCSRCH330J50
	C120		CCSRCH331J50
	C310, C323, C327		CCSRCH470J50
	C230		CCSRCH471J50
	C126, C331, C838		CCSRCH560J50
	C127, C330, C863, C873, C882		CCSRCH5R0C50
	C160		CCSRCH680J50
	C401		CEV101M10
	C101, C104, C201, C325, C601		CEV101M6R3
	C701, C704, C706, C801		CEV101M6R3
	C803, C804, C813–C815, C826		CEV101M6R3
	C123, C158, C264, C412, C414		CEV220M16
	C835, C895		CEV221M4
	C131, C135, C205, C206, C301		CEV470M6R3
	C303, C404, C406, C408, C410		CEV470M6R3
	C501, C504, C832, C836, C841		CEV470M6R3
	C887		CEV470M6R3

Mark	No.	Description	Part No.
	C211		CKSQYB104K25
	C109, C124, C216, C220, C229		CKSQYB105K10
	C234, C261, C275, C308, C326		CKSQYB105K10
	C332, C333, C730, C731		CKSQYB105K10
	C818, C823, C828		CKSQYF105Z16
	C213, C292, C309, C321		CKSRYB102K50
	C105, C106, C108, C146, C147		CKSRYB103K50
	C151, C154–C157, C161, C207		CKSRYB103K50
	C217, C221, C247, C263, C265		CKSRYB103K50
	C276, C318, C320, C620, C705		CKSRYB103K50
	C722, C772, C859		CKSRYB103K50
	C143, C162–C165, C223, C224		CKSRYB104K16
	C242, C273, C274, C311, C312		CKSRYB104K16
	C315		CKSRYB104K16
	C141		CKSRYB222K50
	C328		CKSRYB223K25
	C262, C271		CKSRYB472K50
	C122		CKSRYB473K16
	C102, C103, C113, C129		CKSRYF104Z16
	C132–C134, C136, C137, C159		CKSRYF104Z16
	C166, C191, C202–C204, C209		CKSRYF104Z16
	C214, C218, C219, C222		CKSRYF104Z16
	C226–C228, C235, C237, C241		CKSRYF104Z16
	C246, C302, C304, C305, C317		CKSRYF104Z16
	C322, C402, C403, C405, C407		CKSRYF104Z16
	C409, C411, C413, C415		CKSRYF104Z16
	C502, C503, C505–C509		CKSRYF104Z16
	C602–C605, C608–C611		CKSRYF104Z16
	C614, C615, C617, C621, C622		CKSRYF104Z16
	C702, C703, C707–C721		CKSRYF104Z16
	C732–C734, C736, C738		CKSRYF104Z16
	C740–C742, C771, C791, C800		CKSRYF104Z16
	C802, C805–C812, C816, C817		CKSRYF104Z16
	C819–C822, C824, C825, C827		CKSRYF104Z16
	C829, C830, C833, C834, C837		CKSRYF104Z16
	C839, C840, C842–C848		CKSRYF104Z16
	C861, C862, C867, C871, C872		CKSRYF104Z16
	C876, C878, C881, C883		CKSRYF104Z16
	C888–C890		CKSRYF104Z16
	C852, C855, C857, C858 (2.2 µF/6.3V)		VCG1030
	C922–C924 (2.2 µF/6.3V)		VCG1030
	VC301 (40 pF)		VCM1010

RESISTORS

	R752		RA4C101J
	R507, R508, R624, R628, R633		RA4C103J
	R703, R704, R717, R718		RA4C103J
	R745, R746, R761, R762, R792		RA4C103J
	R812, R813		RA4C103J
	R137, R501, R502, R505, R506		RA4C220J
	R604–R607, R712, R713, R719		RA4C220J
	R724, R748, R749, R791		RA4C220J
	R802, R803, R808		RA4C220J
	R602, R603, R610, R613, R618		RA4C470J
	R100, R101, R11–R14, R141		RS1/10S0R0J
	R15–R17, R171, R18		RS1/10S0R0J
	R201–R203, R266, R300, R319		RS1/10S0R0J
	R333, R411–R413, R701		RS1/10S0R0J
	R775, R776, R891, R893		RS1/10S0R0J
	R920, R921, R935, R936		RS1/10S0R0J
	R205		RS1/10S101J
	R835, R839, R855, R859, R875		RS1/16S1001F
	R881		RS1/16S1001F
	R834, R854, R874		RS1/16S1201F
	R823–R825		RS1/16S1500F
	R117, R118		RS1/16S1501F
	R126		RS1/16S1502F
	R241, R247		RS1/16S2202F
	R110, R153, R155, R173, R174		RS1/16S2702F
	R213, R228, R229, R248		RS1/16S2702F
	R152, R156, R158–R164		RS1/16S4702F
	R167–R170, R172, R175, R194		RS1/16S4702F
	R227		RS1/16S4702F
	R836, R856, R879		RS1/16S5600F
	VR801 (1 kΩ)		VCP1125
	Other Resistors		RS1/16S □□□J

OTHERS

	CN101	PH CONNECTOR	S14B–PH–SM3
	CN801	PH CONNECTOR	S4B–PH–SM3
		FLEXIBLE CABLE 7P	VDA1681
	TP100, TP200, TP300, TP400	CHECKER CHIP	VKF1001
	CN201	B TO B CONNECTOR 14P	VKN1324
	CN106	7P FFC CONNECTOR	VKN1411
	CN107	12P FFC CONNECTOR	VKN1416
	CN105, CN803	14P FFC CONNECTOR	VKN1418
	CN802	17P FFC CONNECTOR	VKN1421
	CN102	20P FFC CONNECTOR	VKN1445
	KN1–KN3	EARTH METAL FITTING	VNF1109
		LABEL	VRW1634
	X602	(20.00MHz)	VSS1114
	X501	(10.00MHz)	VSS1115

C INSB ASSY

SWITCHES AND RELAYS

	S201		DSG1017

OTHERS

	CN201	KR CONNECTOR POST	B3B–PH–K–S
		PCB BINDER	DEF1012
	CN202	FFC CONNECTOR 8P	VKN1239

Mark	No.	Description	Part No.
D	**FGSB ASSY**		
	SEMICONDUCTORS		
	PC101		GP2S27 (B)
	RESISTOR		
	R101		RS1/10S681J
	OTHERS		
	CN101	KR CONNECTOR 3P	B3B–PH–K–S
B	**LOSB ASSY**		
	SWITCHES AND RELAYS		
	S301	REAF SWITCH	VSK1011
	OTHERS		
	CN303	KR CONNECTOR	B2B–PH–K–S
	CN302	FFC CONNECTOR 8P	VKN1268
	CN301	FFC CONNECTOR 12P	VKN1272
A	**LOMB ASSY**		
	OTHERS		
	CN401	KR CONNECTOR	B2B–PH–K–S

5.2 POWERED SUBWOOFER (HTZ-SW7)

LIST OF PCB ASSEMBLIES

NSP	SPAB ASSY	AWM7459
	├ CNB ASSY	AWU7172
	├ POWER SUPPLY ASSY	AWU7406
	├ AMP ASSY	AWU7407
	├ PRIMARY ASSY	AWU7418
	├ SWF ASSY	AWU7408
	├ IF ASSY	AWU7293
	├ FLDP ASSY	AWU7410
	└ HP ASSY	AWU7409
NSP	SMCB ASSY	AWM7460
	├ SECONDARY ASSY	AWU7417
	├ REG (1) ASSY	AWU7176
	└ MAIN ASSY	AWU7364
	DOLBY DIG 9624 ASSY	AWX7271

Mark	No.	Description	Part No.
Z	**CNB ASSY**		
	SEMICONDUCTORS		
	D8751		MTZJ2.0A
	D8752–D8755		MTZJ8.2B
	OTHERS		
	CN3037	10P MINI DIN SOCKET	AKP7015
	CN3036	10P PLUG	KM200TA10
W	**POWER SUPPLY ASSY**		
	SEMICONDUCTORS		
⚠	IC8001 (315mA/125V)		AEK7003
⚠	IC8002		NJM78M56FA
	D8005		1SS254
⚠	D8001–D8004		S5688G
	COILS AND FILTERS		
⚠	L8001		ATF1006
	SWITCHES AND RELAYS		
⚠	RY8001		ASR7018
	CAPACITORS		
⚠	C8001–C8003 (0.01 μF/250V)		ACG7010
	C8005		CEAT102M16
	C8503		CEAT1R0M50
	C8006		CEAT330M16
	C8004		CQMBA103J50
	RESISTOR		
	R8502		RS1/10S102J
	OTHERS		
	H8001, H8002	FUSE CLIP	AKR1003
	3002	4P CABLE HOLDER	51048–0400
⚠	AN3001	POWER SOCKET	BKP1046
⚠	T8002	POWER TRANSFORMER	ATT7027
	J3002	JUMPER WIRE 4P	D20PYY0425E

Mark	No.	Description	Part No.

T AMP ASSY

SEMICONDUCTORS

Mark	No.	Description	Part No.
⚠	IC3410,IC3411 (250mA/125V)		AEK7002
⚠	IC3401		STK407-040
⚠	IC3402		STK407-240
	Q3425–Q3429		2SA1037K
	Q3410		2SA1145
	Q3414		2SA1837
⚠	Q3416		2SA1941(P)
	Q3405		2SA933S
	Q3408, Q3409		2SA970
	Q3412		2SC1740S
	Q3417		2SC2240
	Q3406, Q3407, Q3430		2SC2412K
	Q3411		2SC2705
	Q3419–Q3422		2SC2878
	Q3413		2SC4793
⚠	Q3415		2SC5198(P)
	Q3021–Q3032		2SD2114K
	Q3423, Q3424		DTC143EK
	D3411–D3414, D3419–D3423		1SS254
	D3012–D3019		1SS355
	D3416, D3418		MTZJ24B

COILS AND FILTERS

Mark	No.	Description	Part No.
	L3401–L3406 (5.3 µH)		ATH-059

SWITCHES AND RELAYS

Mark	No.	Description	Part No.
	RY3401-RY3403		ASR7014

CAPACITORS

Mark	No.	Description	Part No.
	C3446, C3447		CCCSL101K2H
	C3445		CCCSL181K2H
	C3432, C3435		CCCSL220J50
	C3422, C3425, C3428, C3431, C3434		CCSQCH100D50
	C3437		CCSQCH331J50
	C3496–C3500		CCSQCH470J50
	C3407, C3408, C3411, C3412, C3414		CCSQCH560J50
	C3478, C3479		CCSQCH680J50
	C3448		CEANP2R2M50
	C3417, C3419, C3442, C3481		CEAT100M50
	C3402, C3404, C3418, C3420		CEAT101M50
	C3436		CEAT221M6R3
	C3421, C3424, C3427, C3430, C3433		CEAT330M16
	C3443		CEAT330M16
	C3401, C3403		CEAT470M50
	C3415		CEATR47M50
	C3405, C3406, C3409, C3410, C3413		CECA2R2M50
	C3456, C3457, C3460, C3461		CFTYA224J50
	C3464, C3465, C3468, C3469		CFTYA224J50
	C3472, C3473, C3476, C3477		CFTYA224J50
	C3416		CKCYB272K50
	C3453, C3454, C3491–C3495		CKSQYB102K50
	C3455		CKSQYB473K25
	C3459, C3463, C3467, C3471, C3475		CKSQYF103Z50
	C3552, C9998, C9999		CKSQYF103Z50
	C3557		CKSQYF334Z25

RESISTORS

Mark	No.	Description	Part No.
	R3470 (0.22 Ω /5W)		ACN7026
	R3511–R3515 (0.1 Ω /1W)		ACN7032
⚠	R3457		RD1/2PMF563J
	R3401, R3402, R3412, R3413, R3484		RD1/4LMF101J
	R3488, R3493, R3498, R3502, R3507		RD1/4LMF101J
	R3483		RD1/4LMF151J
	R3492		RD1/4LMF750J
⚠	R3464, R3465, R3467, R3468		RD1/4PMF101J
⚠	R3459		RD1/4PMF563J
	R3455		RD1/4PU222J
	R3473		RD1/4PU821J
⚠	R3452, R3453, R3466, R3469		RFA1/4PS4R7J
	R3477, R3482		RS1LMF331J
	Other Resistors		RS1/10S□□□ J

OTHERS

Mark	No.	Description	Part No.
	3033	6P CABLE HOLDER	51063-0605
	CN3030	SPEAKER TERMINAL 6–P	AKE7020
	J3033	JUMPER WIRE	D15A06-350-2651
	CN3015	11P SOCKET	KP200IB11L
	CN3022	19P SOCKET	KP200IB19L
	CN3027	3P JUMPER CONNECTOR	KPD3
	JA3029	4P SPEAKER TERMINAL	RKE1003
	CN3017	B TO B CONNECTOR 10P	RKP1822
	KN3401,KN3551	EARTH METAL FITTING	VNF1084

Y PRIMARY ASSY

PRIMARY ASSY has no service part.

V SWF ASSY

CAPACITORS

Mark	No.	Description	Part No.
	C3551		CKSQYB332K50
	C3556		CKSQYF103Z50

OTHERS

Mark	No.	Description	Part No.
		CABLE HOLDER (3P)	51052–0300
	CN3028	2P CONNECTOR	5569–02A1
	J3027	JUMPER WIRE	DXUY0310E
	3027	PCB BINDER	VEF1040

P IF ASSY

SEMICONDUCTORS

Mark	No.	Description	Part No.
	IC8701		TC7W04F
	D8701–D8711		MTZJ8.2B

CAPACITORS

Mark	No.	Description	Part No.
	C8702		CKSQYF103Z50

RESISTOR

Mark	No.	Description	Part No.
	R8701		RS1/10S0R0J

OTHERS

Mark	No.	Description	Part No.
	3026	PIN JACK (1P)	AKB7035
	CN3024	10P MINI DIN SOCKET	AKP7015
	CN3023	10P MINI DIN SOCKET	AKP7031
	CN3011	18P SOCKET	KP200TA18L

Mark	No.	Description	Part No.
A A	**FLDP ASSY**		
	SEMICONDUCTORS		
	IC8601		LC75712E
	Q8601, Q8602, Q8604		2SC2412K
	Q8603, Q8605		DTC124EK
	D8604, D8605		1SS254
	D8603		MTZJ39D
	D8602		MTZJ8.2B
	D8606		SLP9118C51H
	COILS AND FILTERS		
	L8603		ATX1012
	L8602		LAU100J
	L8601		LAU220J
	CAPACITORS		
	C8611		CCSQCH300J50
	C8618, C8620		CEAL1R0M50
	C8616		CEAL470M16
	C8602		CEAT101M6R3
	C8613		CEJA100M35
	C8605		CEJA101M6R3
	C8604, C8606, C8607, C8615, C8619		CKSQYB473K50
	C8621–C8623		CKSQYB473K50
	C8614		CKSQYF103Z50
	C8603		CKSQYF104Z50
	RESISTORS		
	R8622		RA11T473J
	R8619		RA13T473J
	R8620, R8621		RA14T473J
	Other Resistors		RS1/10S□□□J
	OTHERS		
	V8601	FL TUBE	AAV7061
	8602, 8603	FL SPACER	AEB7122
	8601	REMOTE RECEIVER UNIT	GP1U27X
	CN3035	10P SOCKET	KP200TA10L
U	**HP ASSY**		
	CAPACITORS		
	C3903, C3904		CKSQYB223K50
	RESISTORS		
	All Resistors		RS1/10S□□□J
	OTHERS		
	CN3034	HEADPHONE JACK	AKN1028
	CN3033		KPE6
X	**SECONDARY ASSY**		
	SEMICONDUCTORS		
⚠	IC8003, IC8004		AEK7021
	CAPACITORS		
	C8126		CQMA104J50

Mark	No.	Description	Part No.
	OTHERS		
⚠		CABLE HOLDER (12P)	51052–1200
	J3008	JUMPER WIRE	DXUY1215E
R	**REG (1) ASSY**		
	SEMICONDUCTORS		
	IC8203		NJM78M15FA
	IC8204		NJM79M15FA
	IC8201, IC8202		PQ20RV1E
	D8201, D8202		1SS254
	CAPACITORS		
	C8205, C8206		CEAT1R0M50
	C8207, C8208		CEAT330M16
	C8201, C8203		CEJA1R0M50
	C8202, C8204		CEJA330M16
	RESISTORS		
	R8203		RS1/10S1201F
	R8202, R8204		RS1/10S3900F
	R8201		RS1/10S6200F
	OTHERS		
⚠		CABLE HOLDER (11P)	51063–1105
	J3009	JUMPER WIRE	D15A11–200–2651
Q	**MAIN ASSY**		
	SEMICONDUCTORS		
⚠	IC8103,IC8104 (1A/125V)		AEK7009
⚠	IC8105,IC8110 (1.5A/125V)		AEK7011
⚠	IC8111 (2A/125V)		AEK7013
⚠	IC8101,IC8102,IC8112 (4A/125V)		AEK7018
	IC8113,IC8114 (10A/125V)		AEK7022
	IC3001-IC3006,IC3009-IC3012		BA4558F-HT
	IC3019,IC3020		BA4558F-HT
	IC3013-IC3015		LC7535
	IC8106		NJM78L06A
	IC8107		NJM79L06A
	IC8501		PDG250A
	Q8101		2SB1566
	Q3015–Q3020, Q3031, Q8501–Q8503		2SC2412K
	Q8512		2SD2114K
	Q3001–Q3004		2SK208
	Q3006, Q3027, Q3034, Q3039, Q8513		DTA124EK
	Q3418		DTA143EK
	Q8506		DTC114EK
	Q8505, Q8507–Q8511		DTC114TK
	Q3005, Q8504		DTC124EK
	D3005–D3008, D8501, D8503–D8506		1SS355
⚠	D8101, D8103		D3SBA20(B)
⚠	D8102		D5SBA20(B)
	D8205, D8206		MTZJ18C
	D8108		MTZJ39A
	D8203		MTZJ5.6B
	D8115		MTZJ6.8B
	D8204		MTZJ7.5C
	D8118, D8119		MTZJ8.2C
	D8104–D8107, D8109, D8110		S5688G

Mark	No.	Description	Part No.
COILS AND FILTERS			
	L8502		ATX1012
	L8501		LAU220J
CAPACITORS			
	C8103, C8106, C8109, C8112 (1µF/100V)		ACH1237
	C8101, C8102 (4700 µF/50V)		ACH7097
	C8104, C8105 (3300 µF/50V)		ACH7098
	C3003, C3004, C3009, C3010		CCSQCH101J50
	C3015, C3016, C8501		CCSQCH101J50
	C3005, C3006, C3011, C3012		CCSQCH221J50
	C3017, C3018, C3028, C3038, C3048		CCSQCH221J50
	C8504		CCSQCH221J50
	C3061, C3062, C3081, C3082		CCSQCH331J50
	C3113, C8519		CEANP4R7M50
	C3023, C3024, C3033, C3034		CEAT100M50
	C3043, C3044, C3049, C3050		CEAT100M50
	C3069, C3070, C3089, C3090, C3092		CEAT100M50
	C3104, C3119–C3122, C3125		CEAT100M50
	C3147–C3151, C8113, C8122, C8123		CEAT100M50
	C8505		CEAT101M10
	C8114		CEAT101M2A
	C3021, C3022, C3031, C3032		CEAT1R0M50
	C3041, C3042, C8118, C8119, C8502		CEAT1R0M50
	C8510		CEAT1R0M50
	C8512		CEAT220M50
	C8116, C8117		CEAT330M16
	C8115		CEAT331M35
	C8108		CEAT471M16
	C8110, C8111		CEAT471M35
	C8107		CEAT472M16
	C3063, C3064, C3083, C3084, C3103		CECAR10M50
	C8127–C8135, C8137		CKSQYB102K50
	C8506, C8507, C8513, C8517, C8518		CKSQYB103K50
	C8520, C8521, C8523		CKSQYB103K50
	C3115–C3118		CKSQYB154K16
	C3096		CKSQYB184K16
	C3059, C3060, C3079, C3080		CKSQYB222K50
	C3106		CKSQYB223K25
	C3099		CKSQYB223K50
	C3102		CKSQYB274K16
	C3101		CKSQYB562K50
	C3100		CKSQYB564K16
	C3019, C3020, C3025–C3027		CKSQYF104Z25
	C3029, C3030, C3035–C3037		CKSQYF104Z25
	C3039, C3040, C3045–C3047		CKSQYF104Z25
	C3055, C3056, C3067, C3068		CKSQYF104Z25
	C3075, C3076, C3087, C3088		CKSQYF104Z25
	C3093, C3094, C3107, C3108, C3127		CKSQYF104Z25
	C3129, C3131, C3133, C3135, C3137		CKSQYF104Z25
	C8511		CKSQYF104Z50
	C3123		CKSQYF153Z50
	C3124		CKSQYF333Z50
	C3126, C3128, C3130		CKSQYF473Z50

Mark	No.	Description	Part No.
RESISTORS			
	R8520		RA15T472J
⚠	R8103		RD1/4LMF220J
⚠	R8101, R8102, R8104		RD1/4LMF470J
	R3027–R3029		RD1/4PU102J
	R3193, R3194		RD1/4PU105J
	R3015, R3016, R8525, R8535		RD1/4PU221J
	R8116		RD1/4PU472J
⚠	R8105		RD1/4VM103J
⚠	R8199		RFA1/4PS4R7J
	Other Resistors		RS1/10S□□□ J
OTHERS			
	CN3002	4P JUMPER CONNECTOR	52151–0410
	CN3018	10P JUMPER CONNECTOR	AKP7047
	X8501	(7.70 MHz)	ASS1055
	CN3014, CN3019	11P PLUG	KM200IB11
	CN3020	15P PLUG	KM200IB15
	CN3021	19P PLUG	KM200IB19
	CN3010	18P PLUG	KM200TA18
⚠	CN3008	L–CONNECTOR (12P)	KPD12L
⚠	CN3016	B TO B CONNECTOR 10P	RKP1784
	KN8101, KN8102	EARTH METAL FITTING	VNF1084

S DOLBY DIG 9624 ASSY

Mark	No.	Description	Part No.
SEMICONDUCTORS			
	IC9741,IC9761,IC9781		AK4324-VF
	IC9411,IC9441,IC9471,IC9601,IC9621		BA4558F-HT
	IC9641		BA4558F-HT
	IC9121		CD0015AF
	IC9361		KM62V256CLG-7L
	IC9301		MB86342B
	IC9501		PA4025A
	IC9371		TC74HCT244AF
	IC9103		TC74HCU04AF
	IC9381		TC74LVX244FS
	IC9192		TC74VHC00FT
	IC9182,IC9721		TC74VHC157FT
	IC9171		TC74VHC393FT
	IC9172,IC9173,IC9181		TC74VHC74FT
	IC9174		TC7S04FU
	IC9183		TC7S08F
	IC9191		TC7S86FU
	IC9193,IC9902		TC7W08FU
	IC9901		TC7WU04FU
	Q9401, Q9431, Q9461		2PB709A
	Q9402, Q9432, Q9462		2PD601A
	Q9601, Q9611, Q9621, Q9631, Q9641		2SC3326
	Q9651, Q9831, Q9832, Q9841, Q9842 2		SC3326
	Q9833, Q9834, Q9843, Q9844		2SK208
	Q9304, Q9741, Q9822, Q9823, Q9901		PDTA124EK
	Q9181, Q9191, Q9301–Q9303, Q9821		PDTC124EK
	D9101, D9193, D9401, D9431, D9461		1SS181
	D9192		1SS184
	D9191, D9402, D9432, D9831, D9832		1SS355
	D9841, D9842		1SS355

Mark	No.	Description	Part No.
COILS AND FILTERS			
	F9911		ATF7013
	L9301, L9801–L9811	(100 MHz)	ATL7001
	L9171, L9181, L9601, L9611, L9621	(100 MHz)	OTL1040
	L9631, L9641, L9651, L9721	(100 MHz)	OTL1040
	L9741, L9742, L9761, L9762	(100 MHz)	OTL1040
	L9781, L9782	(100 MHz)	OTL1040
	L9103, L9121, L9361, L9371, L9380	(100 MHz)	VTL1019
CAPACITORS			
	C9125		CCSQCH100D50
	C9105, C9122, C9126, C9159, C9302		CCSQCH101J50
	C9309, C9312, C9315, C9318, C9321		CCSQCH101J50
	C9361, C9381, C9624, C9634, C9905		CCSQCH101J50
	C9192, C9832, C9842, C9911		CCSQCH102J50
	C9644		CCSQCH151J50
	C9413, C9414, C9423, C9424, C9512		CCSQCH181J50
	C9522		CCSQCH181J50
	C9901, C9902		CCSQCH220J50
	C9604, C9614		CCSQCH221J50
	C9151, C9152, C9173, C9175, C9182		CCSQCH271J50
	C9184, C9443, C9444, C9453, C9454		CCSQCH271J50
	C9473, C9474, C9542, C9552, C9572		CCSQCH271J50
	C9702, C9704, C9709, C9723, C9743		CCSQCH271J50
	C9746, C9763, C9766, C9783, C9786		CCSQCH271J50
	C9904		CCSQCH271J50
	C9326, C9387, C9388, C9511, C9521		CCSQCH471J50
	C9912		CCSQCH560J50
	C9412, C9422		CCSQCH561J50
	C9442, C9452, C9472, C9541, C9551		CCSQCH681J50
	C9571		CCSQCH681J50
	C9301		CEAT471M6R3
	C9107, C9128, C9502, C9504, C9605		CEV100M16
	C9615, C9625, C9635, C9645, C9741		CEV100M16
	C9744, C9761, C9764, C9781, C9784		CEV100M16
	C9171		CEV101M6R3
	C9655		CEV2R2M50
	C9801, C9802		CEV330M25
	C9186, C9242, C9363, C9373, C9383		CEV470M6R3
	C9721		CEV470M6R3
	C9371		CKSQYB102K50
	C9101, C9172, C9183, C9185		CKSQYB103K50
	C9483, C9484, C9606, C9616, C9656		CKSQYB103K50
	C9701, C9703, C9706–C9708, C9722		CKSQYB103K50
	C9903		CKSQYB103K50
	C9121, C9153, C9154, C9179		CKSQYB104K25
	C9194, C9195		CKSQYB104K25
	C9831, C9841		CKSQYB222K50
	C9482, C9582		CKSQYB223K25
	C9581		CKSQYB473K25
	C9626, C9636, C9646		CKSQYB822K50
	C9043, C9058, C9106, C9127, C9130		CKSQYF104Z25
	C9177, C9178, C9188, C9191, C9193		CKSQYF104Z25
	C9196, C9204, C9224, C9303, C9310		CKSQYF104Z25
	C9313, C9316, C9319, C9322, C9362		CKSQYF104Z25
	C9372, C9382, C9409, C9411, C9421		CKSQYF104Z25
	C9439, C9441, C9451, C9469, C9471		CKSQYF104Z25
	C9481, C9501, C9503, C9601, C9611		CKSQYF104Z25
	C9621, C9631, C9641, C9651, C9742		CKSQYF104Z25
	C9745, C9762, C9765, C9782, C9785		CKSQYF104Z25
RESISTORS			
	Other Resistors		RS1/10S□□□J
OTHERS			
	X9901	(18.432 MHz)	ASS1035
		DOLBY DIGITAL PCB	ANP7271
	CN9801	11P SOCKET	KP200IB11L
	CN9661	15P SOCKET	KP200IB15L
	CN9301	10P JUMPER CONNECTOR	KPE10
	JA9000	PIN JACK (1P)	VKB1077

6. ADJUSTMENT

6.1 DVD SECTION

6.1.1 ADJUSTMENT ITEMS AND LOCATION

■ Adjustment Points (PCB Part)

DVDM ASSY

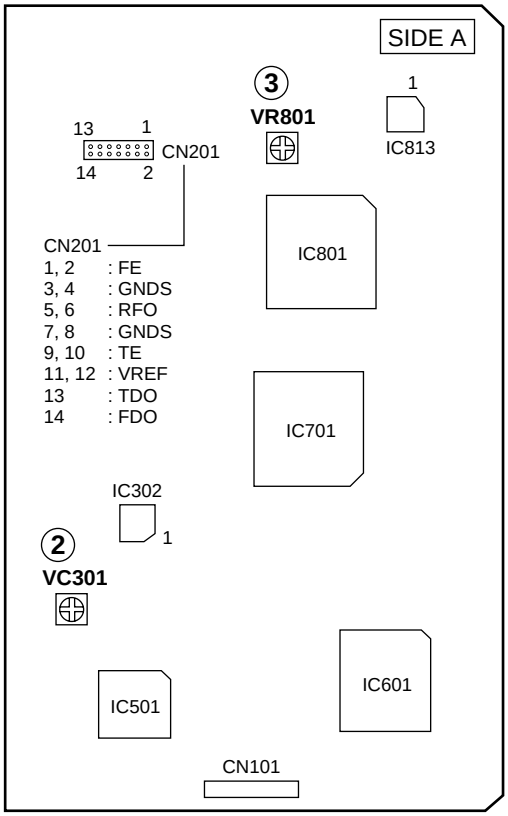

SVIDEO ASSY

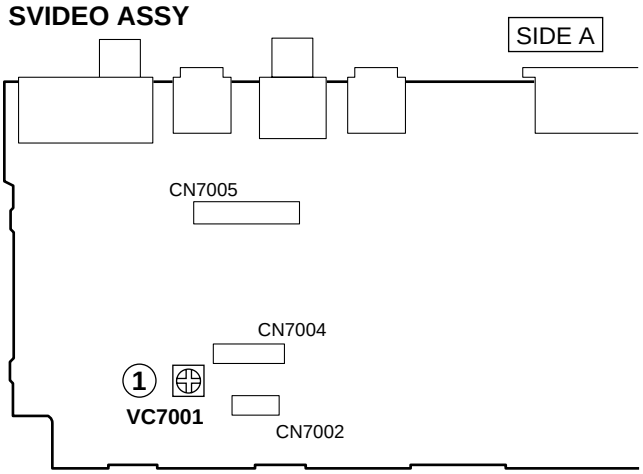

■ Adjustment Items

[Mechanical Part]

❶ Tangential Skew and Radial Skew Coarse Adjustment

❷ DVD Jitter Adjustment

[Electrical Part]

① 18 MHz Master Clock Adjustment

② VCO Offset Adjustment

③ Video Output Level Adjustment

■ Adjustment Points (Mechanical Part)

Note 1:
Remove the tray when adjusting the tangential and radial adjustment screws.

Note 2:
After the adjustment, stabilize the screw with an adhesive.

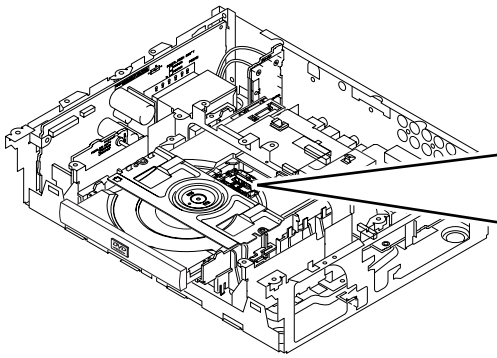

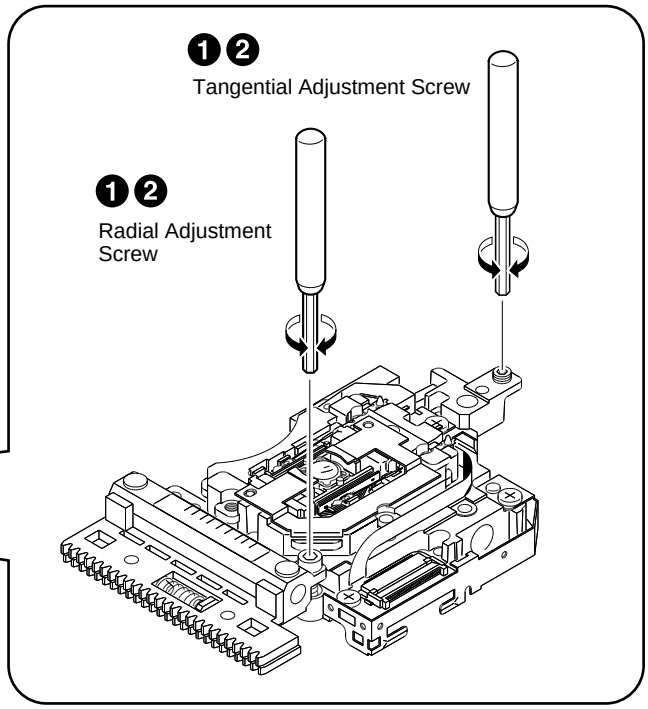

6.1.2 JIGS AND MEASURING INSTRUMENTS

CD test disc (ABEX–784)	DVD test disc (DVD–MJK1)	⊖ Screwdriver (medium)	⊖ Screwdriver (small)
⊖ Precise screwdriver	⊕ Screwdriver (large)	⊕ Screwdriver (medium)	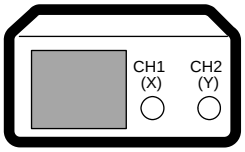 Dual-trace oscilloscope (with delay) Frequency band ≧ 40 MHz
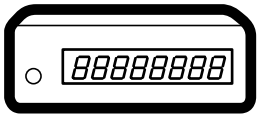 Frequency counter Display digit ≧ 8-digit	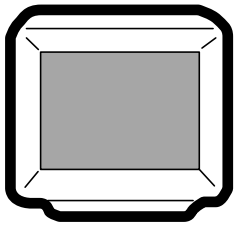 TV monitor	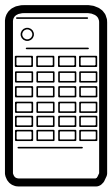 Test mode remote control unit (GGF1067)	Hexagonal screwdriver
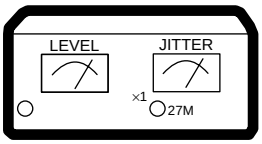 Jitter Meter	Equalizer Unit		

6.1.3 TEST MODE

TEST MODE: ON

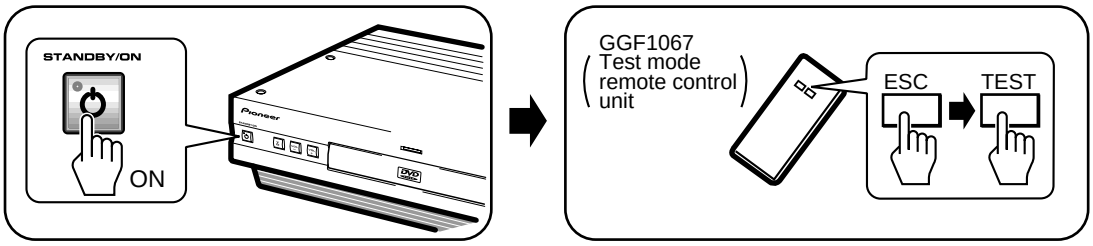

TEST MODE: DISC SET

● **With TRAY**

<TRAY OPEN>

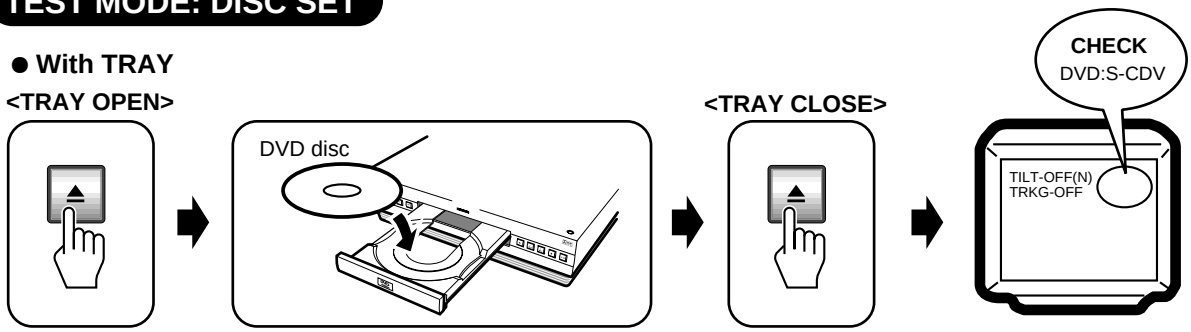

<TRAY CLOSE>

TEST MODE: PLAY

<TRACKING OFF PLAY>

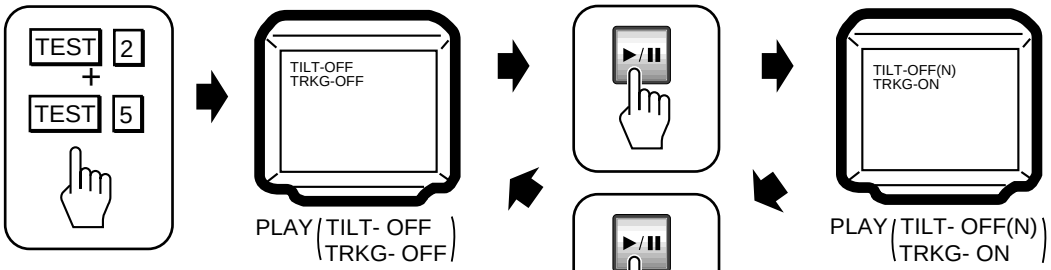

<TRACKING ON PLAY>

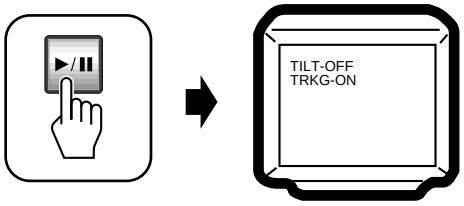

TEST MODE: OFF

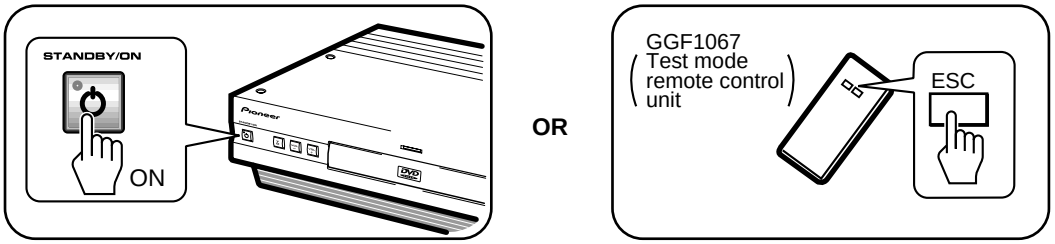

6.1.4 NECESSARY ADJUSTMENT POINTS

When		Adjustment Points	
■ EXCHANGE MECHANISM ASSY PARTS			
Exchange pickup	➡	Mechanical point	❶,❷
		Electric point	———
Exchange spindle motor	➡	Mechanical point	———
		Electric point	———
■ EXCHANGE PCB ASSY			
Exchange board SVIDEO ASSY	➡	Mechanical point	———
		Electric point	———
		Note: ① is adjusted already.	
Exchange board DVDM ASSY	➡	Mechanical point	———
		Electric point	———
		Note: ② and ③ are adjusted already.	

6.1.5 MECHANICAL ADJUSTMENT

❶ Tangential Skew and Radial Skew Coarse Adjustment

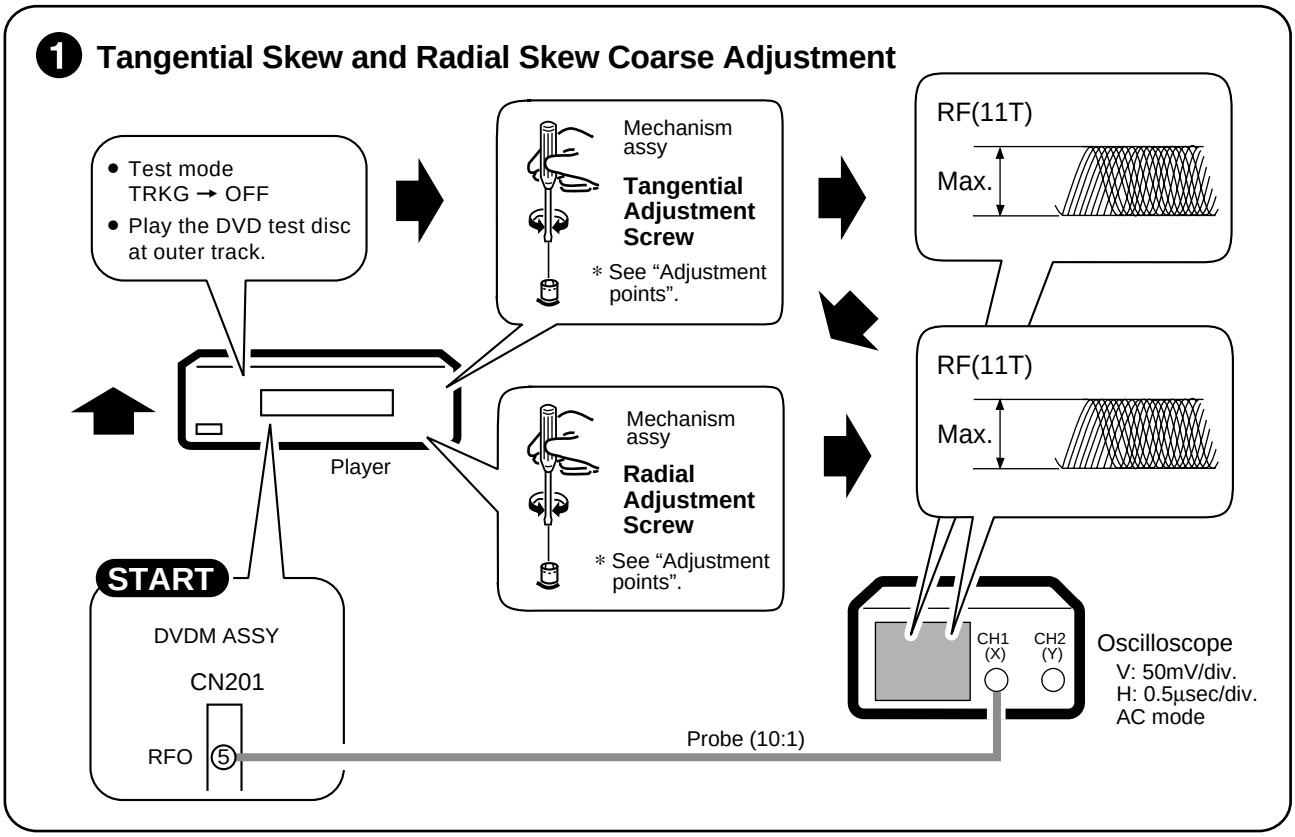

❷ DVD Jitter Adjustment

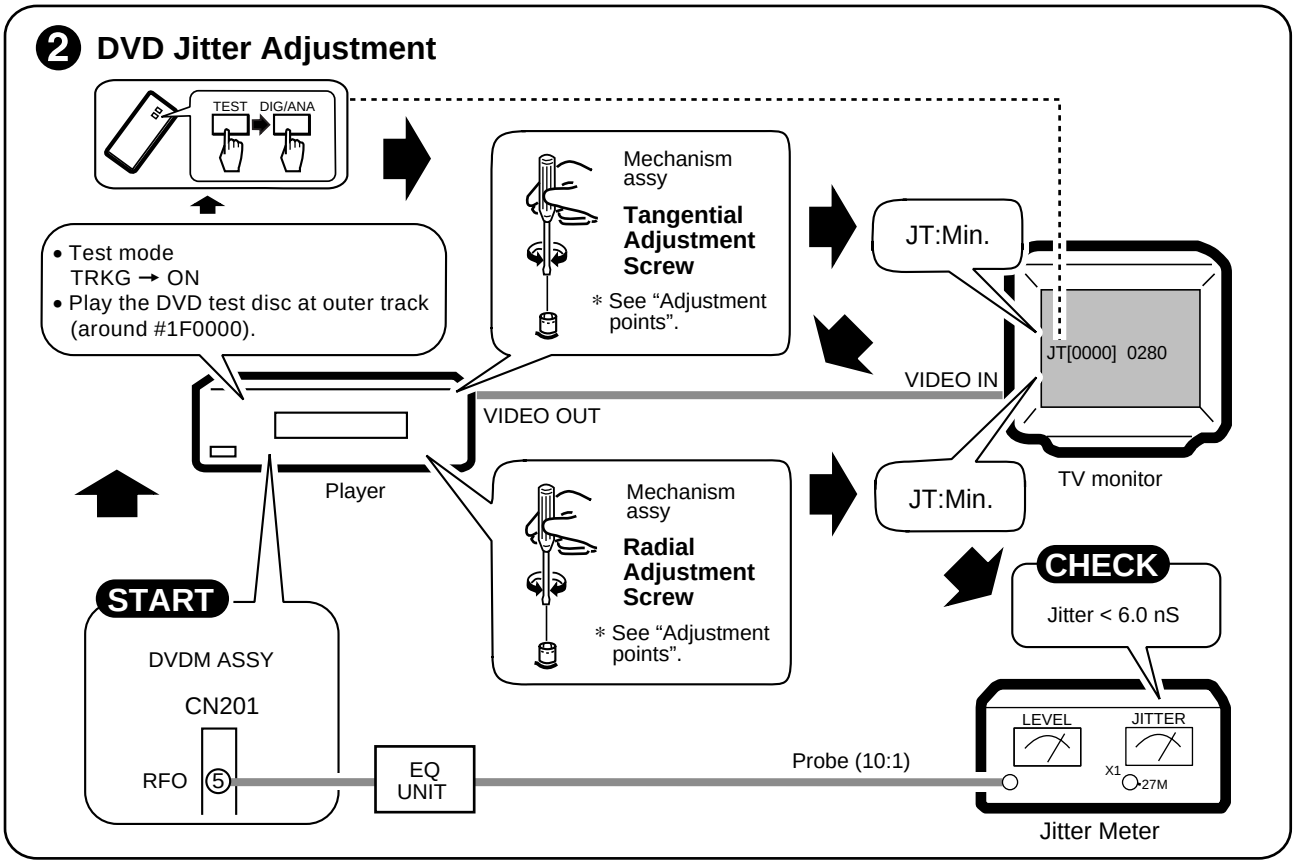

6.1.6 ELECTRICAL ADJUSTMENT

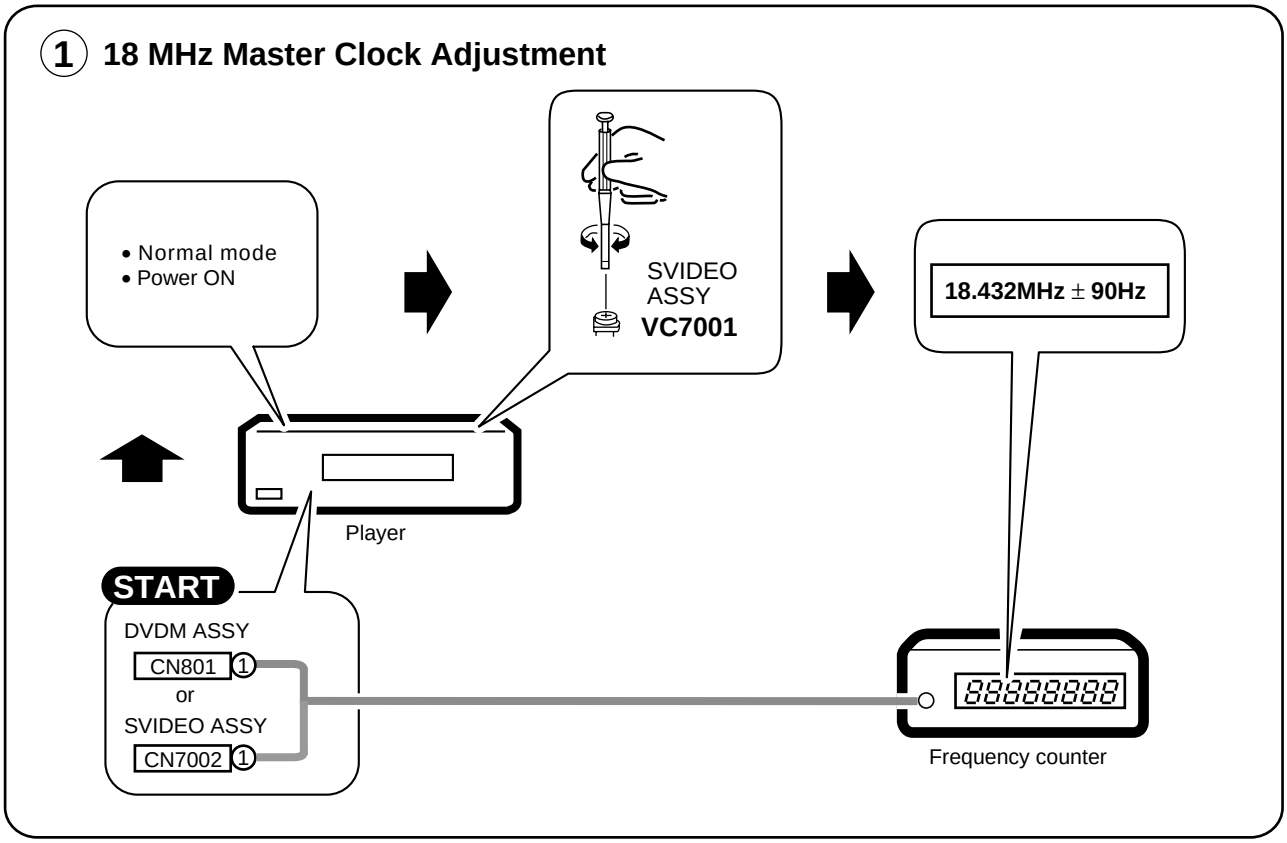

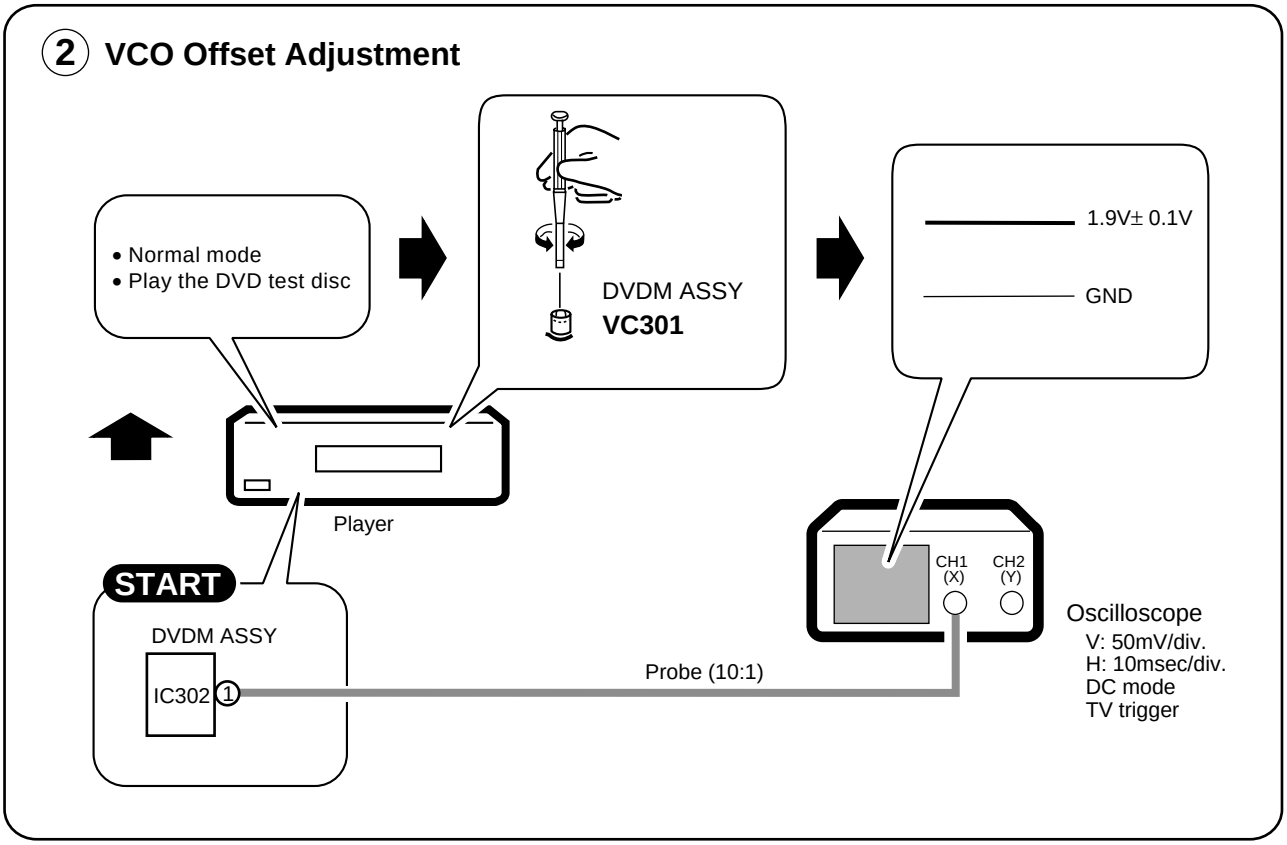

③ Video Output Level Adjustment

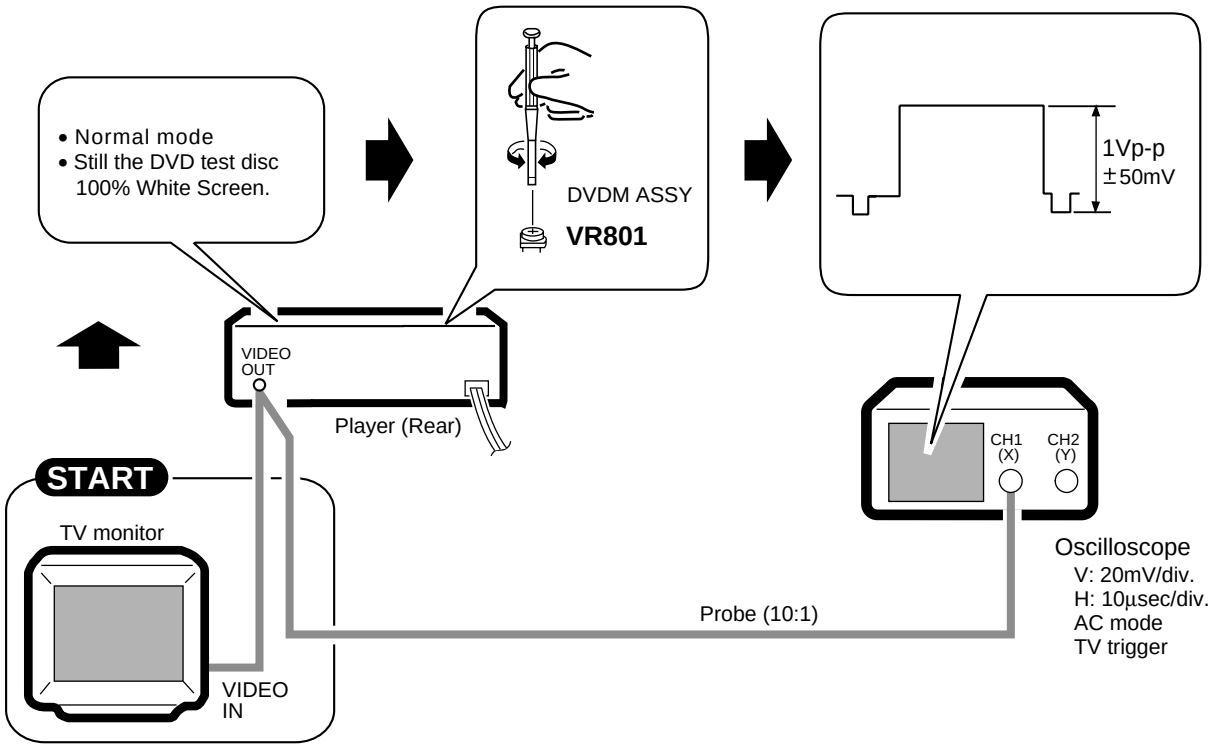

6.1.7 OPERATIONS IN THE TEST MODE

■ Test Mode Remote Control Unit (GGF1067)

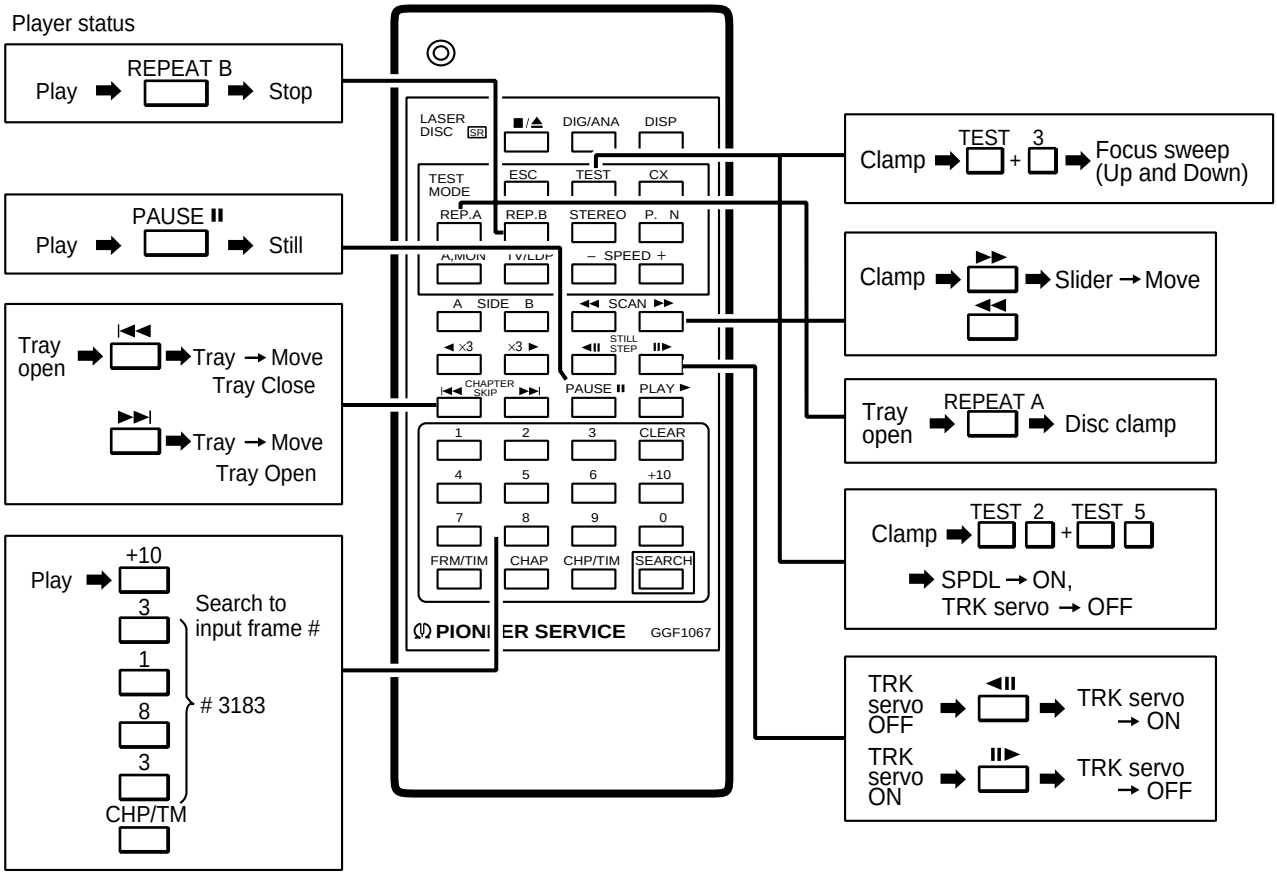

■ TV Monitor Display

Character in bold: Item name
□: Information display

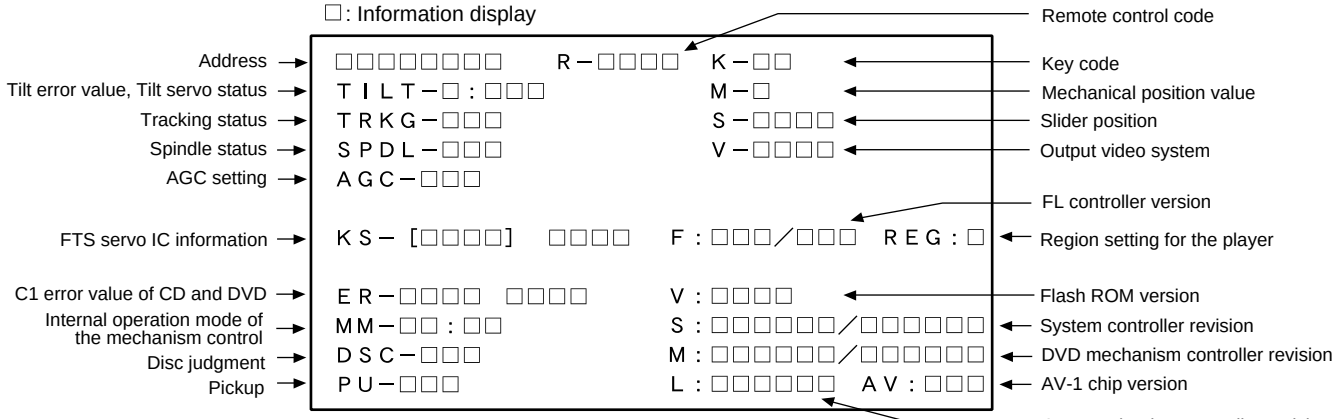

First screen display

Note: Switch the first and second screen by pressing the [DISPLAY] key on the remote control unit.

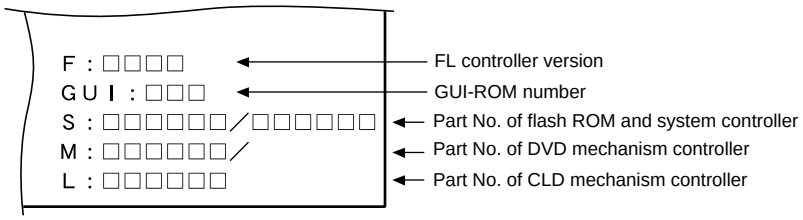

Second screen display (at lower right portion of the screen)

6.2 TUNER SECTION

6.2.1 FM TUNER SECTION

- Set the mode selector to FM BAND.
- Connect the wiring as shown in Fig. 1.

Step No.	Adjustment Title	FM SG (1kHz, ±75kHz dev.)		Reception Frequency Display	Adjustment Location	Specifications
		Frequency (MHz)	Level (dBμV)			
1	Front End Sensitivity	106	0 – 30	106 MHz	L6104 L6105 L6102 T6101	Adjust so that the DC voltage between the IC6201-Pin 20 and GND becomes at maximum level.
2	Stereo Distortion	98 (ON STEREO)	80	98 MHz	T6101	Minimize the distortion with 1/8 rotation of the core.
3	TUNED IND. Lighting Level	98	18 ± 2	98 MHz	VR6201	Adjust so that the indicator of TUNED IND. starts to light up.

Note: Before adjusting, make sure there is no gap between L6101 and L6102 as well as between L6103 and L6104. If there is a gap between them, bring them into contact with each other first, and then make adjustments.

6.2.2 AM TUNER SECTION

- Set the mode selector to AM BAND.
- Connect the wiring as shown in Fig. 1.

Step No.	Adjustment Title	AM SG (400Hz, 30% Mod.)		Reception Frequency Display	Adjustment Location	Specifications
		Frequency (kHz)	Level (dBμV/m)			
1	Front End Sensitivity	999*1	35 – 45	999 kHz*1	T6201	Adjust so that the DC voltage between the IC6201-Pin 20 and GND becomes at maximum level.

*1: For the area using 10 kHz step, frequencies should be 1000 kHz.

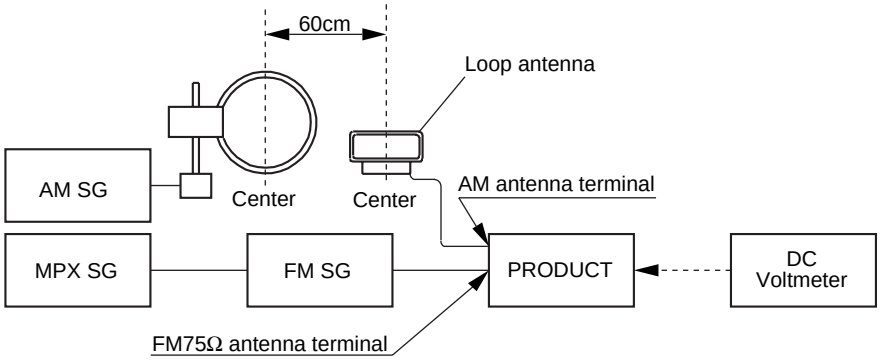

Fig. 1 AM and FM Adjustment Wiring Diagram

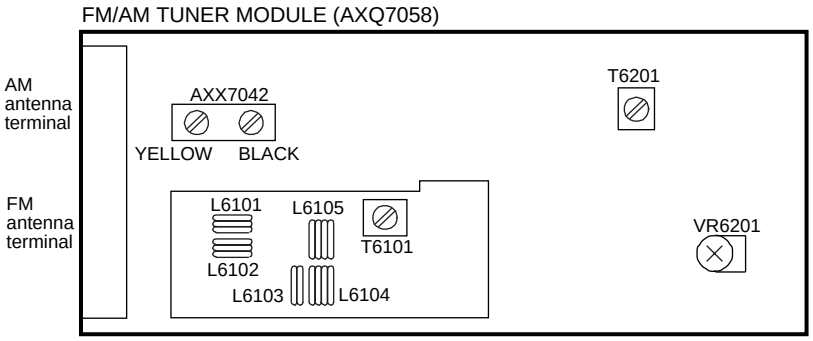

Fig. 2 Adjustment Point

7. GENERAL INFORMATION

7.1 PARTS

- The information shown in the list is basic information and may not correspond exactly to that shown in the schematic diagrams.

7.1.1 IC

■ TC9271F (IC7008: SVIDEO ASSY)

● Digital Audio Interface Modulation and Transmission IC

● Block Diagram

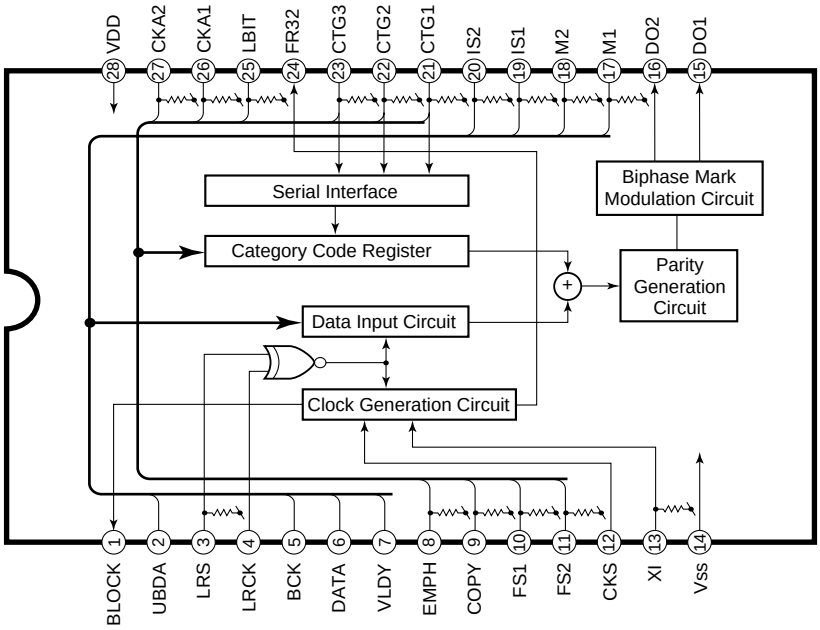

● Pin Function

No.	Name	I/O	Description
1	BLOCK	O	Block leading head position detection terminal
2	UBDA	I	User bit data input terminal
3	LRS	I	LRCK polarity selection terminal LRS: L Level → L ch Data, R ch Data; L Level → R ch Data, L ch Data
4	LRCK	I	LR clock input terminal
5	BCK	I	Bit clock input terminal
6	DATA	I	2-channel mode: Data input terminal 4-channel mode: Data input terminal 1
7	VLDY	I	2-channel mode: Compensation flag input terminal 4-channel mode: Data input terminal 2
8	EMPH	I	Emphasis flag setting terminal
9	COPY	I	Parallel setting mode: Copy flag setting terminal Serial setting mode: Fixed to “H”
10	FS1	I	Sampling frequency setting terminal 1
11	FS2	I	Sampling frequency setting terminal 2
12	CKS	I	Clock division selection terminal
13	XI	I	Clock input terminal
14	Vss	—	GND terminal
15	DO1	O	Digital data output terminal 1
16	DO2	O	Digital data output terminal 2
17	M1	I	Channel mode setting terminal 1
18	M2	I	Channel mode setting terminal 2
19	IS1	I	Data input mode setting terminal 1
20	IS2	I	Data input mode setting terminal 2
21	CTG1	I	Parallel setting mode: Category code setting terminal 1 Serial setting mode: Data input terminal
22	CTG2	I	Parallel setting mode: Category code setting terminal 2 Serial setting mode: Clock input terminal
23	CTG3	I	Parallel setting mode: Category code setting terminal 3 Serial setting mode: Latch pulse input terminal
24	FR32	O	FR32 output terminal
25	LBIT	I	Parallel setting mode: LBIT input terminal 1 Serial setting mode: 32/192 bit switching terminal
26	CKA1	I	Parallel setting mode: Clock accuracy setting terminal 1 Serial setting mode: Fixed to “H”
27	CKA2	I	Parallel setting mode: Clock accuracy setting terminal 2 Serial setting mode: Output prohibited, fixed to “H”
28	VDD	—	Power supply voltage terminal

■ PDG251A (IC5501: MOTHER ASSY)

● System Micro-computer (for AV center)

● Pin Function

No.	Symbol	Name	I/O	Description
1	G1/A1	———	OUT	————————
2	G0/A0	———	OUT	————————
3	NC	———	—	————————
4	PE0/INT0/EC0	———	IN	————————
5	PE1/INT1/EC1	———	IN	————————
6	PE2/INT2	———	IN	————————
7	PE3/INT3/NM1	———	IN	————————
8	PE4/RMC	SR_IN	IN	SR input
9	PE5	TEST_MODE	IN	Test mode when this port is “L” at the time of power ON
10	PE6/PWM	AUDIOSW_STAT3	OUT	AV switching strobe 3 (DIGITAL system)
11	PE7/TO/ADJ	AUDIOSW_STAT1	OUT	AV switching strobe (AUDIO system)
12	PC0/KR0	AUDIOSW_STAT2	OUT	AV switching strobe 2 (VIDEO system)
13	PC1/KR1	AUDIOSW_DATA	OUT	Function switching IC data
14	PC2/KR2	AUDIOSW_CLK	OUT	Function switching IC clock
15	PC3/KR3	———	OUT	————————
16	PC4/KR4	SYSBUS_DI	IN	System bus data input [for ID (priority) confirmation]
17	PC5/KR5	SYSBUS_DO	IN/OUT	System bus data I/O (input except at the time of transmission)
18	PC6/KR6	SYSBUS_REQ	IN/OUT	System bus REQ I/O (input except at the time of transmission)
19	PC7/KR7	SYSBUS_CLK	OUT	System bus CLK output (always communication master)
20	PB0/CINT	DVD_XRDY	OUT	DVD-READY
21	PB1/CS0	DVD_LT1	IN	DVD latch
22	PB2/SCK0	DVD_XSCK	OUT	DVD serial data CLK
23	PB3/SI0	DVD_SI	IN	DVD serial data IN
24	PB4/SO0	DVD_SO	OUT	DVD serial data OUT
25	PB5/SCK1	DISP_CLK	OUT	Display communication transmission clock output
26	PB6/SI1	DISP_REQ_MD	OUT	Display communication REQ to MD
27	PB7/SO1	DISP_DATA	OUT	Display communication transmission data output
28	PI0	———	IN	————————
29	PA0/AN0	KEY_IN	IN	AD input for main unit key input
30	PA1/AN1	SLEEP	IN	AD input for confirmation of microcomputer power supply 5.6 V DOWN (for backup)
31	PA2/AN2	FAN DET	IN	AD input for confirmation of heat dissipation fan operation
32	PA3/AN3	3.3V DET	IN	AD input for confirmation of DVD power supply 3.3 V DOWN (for sag correspondence)
33	PA4/AN4	MS1	IN	AD input for destination switching, 0: J/1: KU
34	PA5/AN5	AD_OVL	IN	AD input overload detection AD input
35	PA6/AN6	AV_5.6V	IN	AD input for confirmation of AV center 5.0 V power supply DOWN
36	PA7/AN7	XSTEREO/TUNED	IN	ADL for TUNER stereo reception OK/reception OK
37	PI1	———	—	GND
38	RST	———	—	Reset
39	EXTAL	———	—	Oscillator 16 MHz
40	XTAL	———	—	Oscillator 16 MHz
41	Vss	———	—	GND
42	PI2/TX	———	—	GND
43	PI3/TEX	———	—	GND
44	VDD	———	—	5V
45	Vfdp	———	—	GND
46	PD0/A55	TX_DI (OUT)	OUT	TUNER data output
47	PD1/A54	TX_CLOCK	OUT	TUNER clock output
48	PD2/A53	TX_CE	OUT	TUNER CE output
49	PD3/A52	TX_MUTE	OUT	TUNER mute output

No.	Symbol	Name	I/O	Description
50	PD4/A51	TX_DO (IN)	OUT	TUNER data input
51	PD5/A50	———	OUT	————
52	PD6/A49	DVD_RESET	OUT	DVD player reset output
53	PD7/A48	———	OUT	————
54	PF0/A47	———	OUT	————
55	PF1/A46	———	OUT	————
56	PF2/A45	DISP_REQ	OUT	Display reception REQ to powered subwoofer
57	PF3/A44	———	OUT	————
58	PF4/A43	———	OUT	————
59	PF5/A42	———	OUT	————
60	PF6/A41	———	OUT	————
61	PF7/A40	———	OUT	————
62	PG0/A39	xAUDIO1_MUTE	OUT	AUDIO1 REC out mute (LOW active)
63	PG1/A38	———	OUT	————
64	PG2/A37	———	OUT	————
65	PG3/A36	xAUDIO_MUTE	IN	Audio mute (LOW active)
66	PG4/A35	———	OUT	————
67	PG5/A34	———	OUT	————
68	PG6/A33	FUNC_NO_CLOCK	OUT	At the time of data transmission to TC9162, TC9164, “L” . Coupled with IC strobe 1
69	PG7/A32	AUDIO_REC_CTL	OUT	AUDIO REC out switching
70	PH0/A31	———	OUT	————
71	PH1/A30	———	OUT	————
72	PH2/A29	———	OUT	————
73	PH3/A28	XLED_POWER	OUT	POWER LED control, “H”: Lit
74	PH4/A27	XLED_DVD	OUT	DVD LED control, “H”: Lit
75	PH5/A26	xLED_PLAY	OUT	PLAY LED control, “H”: Lit
76	PH6/A25	XPW_TUNER	OUT	Tuner power ON/OFF
77	PH7/A24	XPW_DVD	OUT	DVD power ON/OFF
78	A23	———	OUT	————
79	A22	———	OUT	————
80	A21	———	OUT	————
81	A20	———	OUT	————
82	A19	———	OUT	————
83	A18	———	OUT	————
84	A17	———	OUT	————
85	A16	———	OUT	————
86	G15/A15	———	OUT	————
87	G14/A14	———	OUT	————
88	G13/A13	———	OUT	————
89	VDD	———	—	5V
90	G12/A12	———	OUT	————
91	G11/A11	———	OUT	————
92	G10/A10	———	OUT	————
93	G9/A9	———	OUT	————
94	G8/A8	———	OUT	————
95	G7/A7	———	OUT	————
96	G6/A6	———	OUT	————
97	G5/A5	———	OUT	————
98	G4/A4	———	OUT	————
99	G3/A3	———	OUT	————
100	G2/A2	———	OUT	————

■ PDG250A (IC8501: MAIN ASSY)

● System Micro-computer (for Subwoofer)

● Pin Function

No.	Symbol	Name	I/O	Description
1	G1/A1	———	OUT	————————
2	G0/A0	———	OUT	————————
3	NC	———	—	5V
4	PE0/INT0/EC0	———	IN	5V
5	PE1/INT1/EC1	AC_PULSE	IN	AC pulse input (interrupt use)
6	PE2/INT2	SYSBUS_CLOCK	IN	System bus clock input (interrupt use)
7	PE3/INT3/NM1	AC3_REQ	IN	Communication request from the AC3 board, “L”: Communication request (interrupt use)
8	PE4/RMC	REM_IN	IN	Remote control input
9	PE5	TEST_MODE	IN	Test mode when L at the time of power ON
10	PE6/PWM	———	OUT	————————
11	PE7/TO/ADJ	———	OUT	————————
12	PC0/KR0	———	OUT	————————
13	PC1/KR1	FL_DATA	OUT	FL driver data
14	PC2/KR2	DEM_LOCK	IN	When the modulator IC is locked to the RF signal, “L” Input
15	PC3/KR3	DIR_LOCK	IN	When DIR is locked to the digital input signal, “L” Input
16	PC4/KR4	SYSBUS_DI	IN	System bus data input [for ID (priority) confirmation]
17	PC5/KR5	SYSBUS_DO	IN/OUT	System bus data output
18	PC6/KR6	SYSBUS_REQ	IN/OUT	System bus REQ I/O (input except at the time of transmission)
19	PC7/KR7	FL_CLK	OUT	FL diver clock
20	PB0/CINT	FL_CE	OUT	FL driver address/data status
21	PB1/CS0	AC3_CS	OUT	Chip selection for AC-3 board communication
22	PB2/SCK0	AC3_CLK	OUT	Serial clock for AC-3 board communication
23	PB3/SI0	AC3_OUT	IN	Serial data input for AC-3 board communication
24	PB4/SO0	AC3_DATA	OUT	Serial data output for AC-3 board communication
25	PB5/SCK1	DISP_CLOCK	IN	Clock input for display communication
26	PB6/SI1	DISP_DATA	IN	Data input for display communication
27	PB7/SO1	DISP_REQ	IN	REQ output for display communication
28	AVref	———	—	5V
29	PA0/AN0	HP_SW	IN	Headphone insertion detection
30	PA1/AN1	DC DETECT	IN	Power supply trouble detection AD
31	PA2/AN2	TEMP_HI1	IN	Temperature rise detection, amplifier 1
32	PA3/AN3	TEMP_HI2	IN	Temperature rise detection, amplifier 2
33	PA4/AN4	———	OUT	————————
34	PA5/AN5	———	OUT	————————
35	PA6/AN6	———	OUT	————————
36	PA7/AN7	OL_DET	IN	Overcurrent detection
37	AVss	GND	—	————————
38	RST	RESET	—	————————
39	EXTAL	———	—	Oscillator 7.70MHz
40	XTAL	———	—	Oscillator 7.70MHz
41	Vss	GND	—	————————
42	TX	OPEN_GND	—	————————
43	TEX	GND	—	————————
44	VDD	———	—	5V
45	Vfdp	———	—	————————
46	PD0/A55	AD/DIR	OUT	Master/Slave selection, “L”: Analog, “H”: Digital
47	PD1/A54	———	OUT	————————
48	PD2/A53	AC3_RST	OUT	AC-3 board: Reset
49	PD3/A52	AC3_BST	OUT	AC-3 board: Bootstrap

No.	Symbol	Name	I/O	Description
50	PD4/A51	———	OUT	————
51	PD5/A50	———	OUT	————
52	PD6/A49	———	OUT	————
53	PD7/A48	———	OUT	————
54	PF0/A47	———	OUT	————
55	PF1/A46	———	OUT	————
56	PF2/A45	———	OUT	————
57	PF3/A44	———	OUT	————
58	PF4/	———	OUT	————
59	PF5/A42	———	OUT	————
60	PF6/A41	SW ATT	OUT	Subwoofer ATT control, L: DOLBY/Through, “H”: SFC ON
61	PF7/A40	48/96	OUT	48/96 kHz switching FET switch control, “H”: 48 kHz, “L”: 96 kHz
62	PG0/A39	A_CLK1	OUT	Electronic volume 1, clock output
63	PG1/A38	A_DATA1	OUT	Electronic volume 1, data output
64	PG2/A37	A_CE1	OUT	Electronic volume 1, CE output
65	PG3/A36	A_CLK2	OUT	Electronic volume 2, clock output
66	PG4/A35	A_DATA2	OUT	Electronic volume 2, data output
67	PG5/A34	A_CE2	OUT	Electronic volume 2, CE output
68	PG6/A33	AUDIO_MUTE	OUT	AUDIO mute
69	PG7/A32	HP_MUTE	OUT	Headphone mute
70	PH0/A31	RELAY_FRONT	OUT	Relay, front
71	PH1/A30	RELAY_SUB	OUT	Relay, subwoofer
72	PH2/A29	VOL_ATT	OUT	Volume ATT switching, “H”: 0 to 17, “L”: 18 to 35
73	PH3/A28	RELAY_AC1	OUT	Relay AC1
74	PH4/A27	RELAY_AC2	OUT	Relay AC2
75	PH5/A26	———	OUT	————
76	PH6/A25	———	OUT	————
77	PH7/A24	———	OUT	————
78	A23	———	OUT	————
79	A22	———	OUT	————
80	A21	———	OUT	————
81	A20	———	OUT	————
82	A19	———	OUT	————
83	A18	———	OUT	————
84	A17	———	OUT	————
85	A16	———	OUT	————
86	G15/A15	———	OUT	————
87	G14/A14	———	OUT	————
88	G13/A13	———	OUT	————
89	VDD	———	—	5V
90	G12/A12	———	OUT	————
91	G11/A11	———	OUT	————
92	G10/A10	———	OUT	————
93	G9/A9	———	OUT	————
94	G8/A8	———	OUT	————
95	G7/A7	———	OUT	————
96	G6/A6	———	OUT	————
97	G5/A5	———	OUT	————
98	G4/A4	———	OUT	————
99	G3/A3	———	OUT	————
100	G2/A2	———	OUT	————

■ MM1112XF (IC7801: VIDEO ASSY)

● Video Switch

● Block Diagram

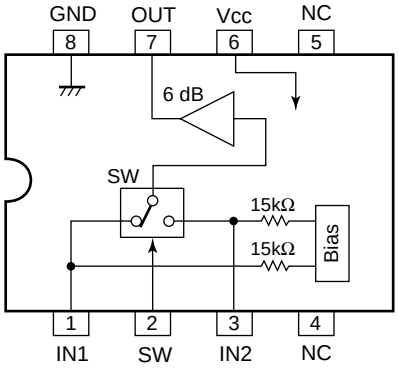

■ NJM2534M (IC7505: SVIDEO ASSY)

● 3-input Signal Video Switch

● Block Diagram

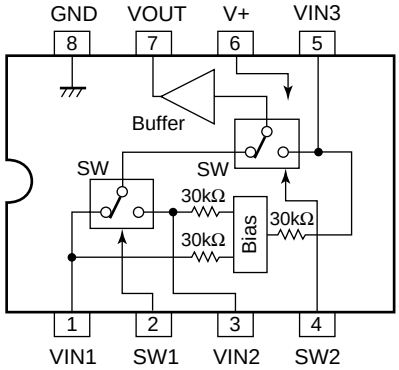

■ NJM2535M (IC7504: SVIDEO ASSY)
(IC7802: VIDEO ASSY)

● 3-input Signal Video Switch

● Block Diagram

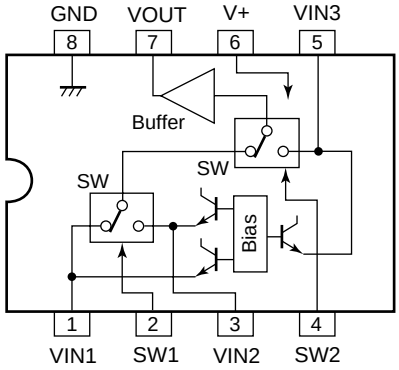

■ STK407-240 (IC3402: AMP ASSY)

● 3-channel AF Power Amplifier

● Block Diagram

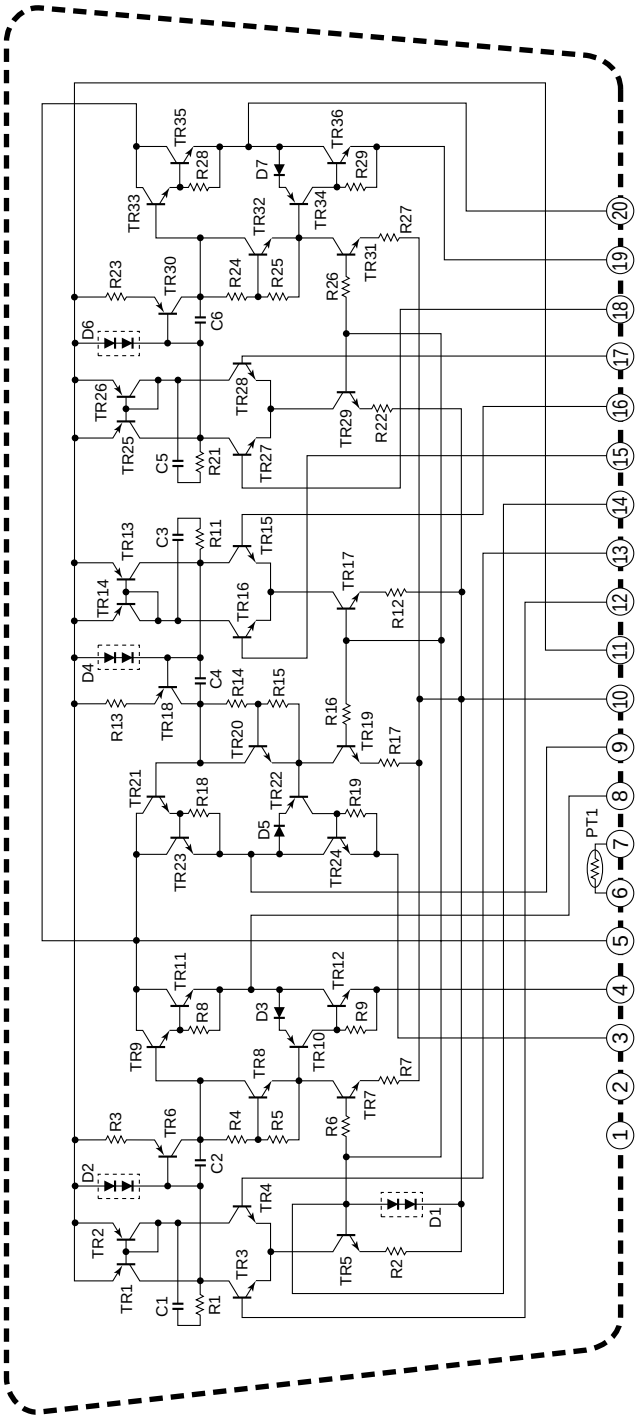

7.1.2 DISPLAY

■ AAV7061 (V8601: FLDP ASSY)

● FL Tube

● Pin Assignment

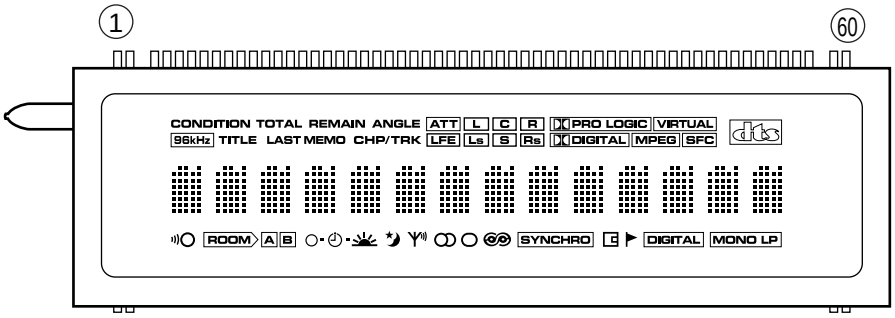

● Pin Connection

Note) F1, F2: Filament G1 to G11: Grid
S1 to S38: Anode NP: No pin

Pin No.	1	2	3	4	5	6	7	8	9	10	11	12	13	14	15	16	17	18	19	20	21	22	23	24	25	26	27	28	29	30
Assignment	NL	F1	NP	G8	G7	G6	G5	G4	G3	G2	G1	S1	S2	S3	S4	S5	S6	S7	S8	S9	S10	S11	S12	S13	S14	S15	S16	S17	S18	S19
Pin No.	31	32	33	34	35	36	37	38	39	40	41	42	43	44	45	46	47	48	49	50	51	52	53	54	55	56	57	58	59	60
Assignment	S20	S21	S22	S23	S24	S25	S26	S27	S28	S29	S30	S31	S32	S33	S34	S35	S36	S37	S38	G16	G15	G14	G13	G12	G11	G10	G9	NP	F2	NL

● Anode and Grid Assignment (1/2)

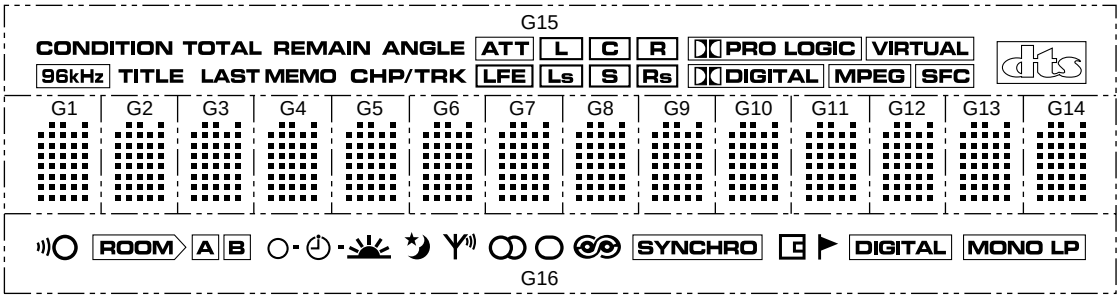

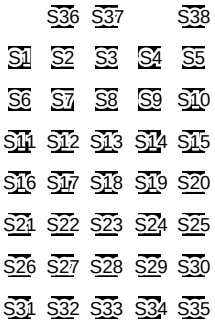

G1 – G14

● Anode and Grid Assignment (2/2)

	G1 – G14	G15	G16
S1	S1		
S2	S2		
S3	S3		
S4	S4		
S5	S5		
S6	S6		
S7	S7		
S8	S8		
S9	S9	96kHz	
S10	S10	TITLE	
S11	S11	CONDITION	
S12	S12	ANGLE	
S13	S13	LAST MEMO	
S14	S14	TOTAL	
S15	S15	REMAIN	
S16	S16	CHP/TRK	MONO LP
S17	S17		DIGITAL
S18	S18		▶
S19	S19		

	G1 – G14	G15	G16
S20	S20	ATT	
S21	S21	LFE	
S22	S22	(LFE)	
S23	S23	L	B
S24	S24	Ls	A
S25	S25	C	ROOM
S26	S26	S	SYNCHRO
S27	S27	R	
S28	S28	Rs	
S29	S29	DIGITAL	
S30	S30	MPEG	
S31	S31	DSP	
S32	S32		
S33	S33	VIRTUAL	
S34	S34	PRO LOGIC	
S35	S35		
S36	S36		
S37	S37		
S38	S38		

7.2 DIAGNOSIS

7.2.1 FAIL-SAFE

■ DVD Center Unit (HTZ-C7)

1. System Reset after Detection

■ Check of the power supply line (3.3 V line) (AD3: Pin 32)

Fail-safe for prevention of crashing of the DVD microcomputer (system controller) with occurrence of power supply ripples. (ADC read value for the power supply voltage of the player section at the time of power ON)
System reset is applied when the threshold value is not reached six times in a row during power ON.

● Operation explanation

The power supplied to the DVD assembly is composed of the three types +12 V, +5 V, and +3.3 V, and of these, the 3.3 V system is detected at all times.
In the following diagram, dropping of the +3.3 V system to 3 V or less because of power supply trouble is detected, and the power supply is switched off.

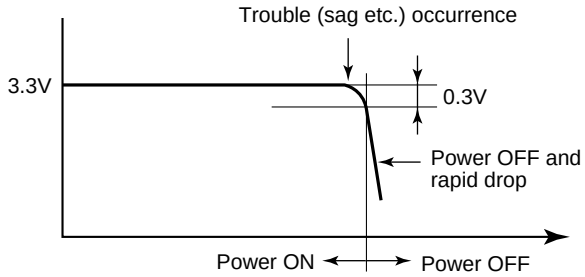

3.3 V system Trouble Detection

■ Check of the power supply line (5 V line) (AD6: Pin 35)

Fail-safe at the time of disconnection from the power outlet. As the power for the AV controller is supplied from the powered subwoofer section, this kind of fail-safe becomes necessary. A system reset is applied when the ADC read value for the power supply voltage of the DVD center unit twice in a row drops below the threshold value.

■ Cooling fan trouble detection (AD2: Pin 31)

When the cooling fan stops to run because of a defect, entry of foreign matter, etc. and energization is continued, there is the possibility of burning, so that a circuit for detection of this condition is included. A system reset is applied when the ADC read value for the cooling fan operation detection port twice in a row drops below the threshold value.

● Operation explanation

When the fan is operating in the fan detection circuit, a current flows, so that a potential difference occurs at R5056 and Q5515 becomes ON. In this case, the anode potential of D5509 is – (minus), so that the potential becomes a reverse maximum voltage and D5509 does not open. Accordingly, Q5512 is OFF and pin ③ of the microcomputer reaches high level. When the fan rotation stops, Q5513 becomes OFF and the potential at C becomes +. Then D5509 becomes ON, and as the result, Q5512 becomes ON.
Then pin ㉛ of the microcomputer becomes low level.

The microcomputer at all times monitors pin ㉛, and when this becomes low level, forced entry into standby mode is performed and the power supply of the set is switched off.

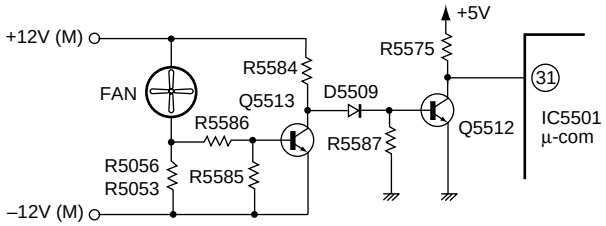

Fan Detection Circuit

■ Communication error with the DVD system controller

A system reset is applied when serial communication with the DVD system controller fails 32 times in a row.

2. Stop Mode after Detection (The appearance is a simple system reset.)

■ Check of the AV control power supply line (5.6 [V] line) from the powered subwoofer unit (AD1: Pin 30)

When the power supply for the AV controller drops off, the AV controller enters stop mode and memory backup is performed.
When the ADC read value for the power supply voltage twice in a row drops below the threshold value, stop mode (power saving mode) is entered and the memory contents are backed up.

■ Powered subwoofer (HTZ-SW7)

1. Power OFF after Detection

■ DVD center display communication interruption

Power OFF is performed when the REQ edge of the DVD center display communication is interrupted for 1.5 sec. (The count value of the internal 1 ms timer is used for the judgment.)

■ Overcurrent detection

Power OFF is performed when the overcurrent detection port (always “H” while the power is ON) becomes “L”. (Judgment is performed once with the main loop.)

■ Abnormal temperature detection

An abnormal temperature is judged to exist when one of the abnormal temperature detection ports (A/D input, 2 ports) becomes 4.3 V or higher, and then the power is switched off. (Judgment is performed once with the main loop.)

■ Overvoltage detection

An overvoltage is judged to exist when the overvoltage detection port (A/D input port) drops to 3.5 V or less, and then the power is switched off. (Judgment is performed once with the main loop.)

2. System Reset after Detection

■ Abnormal AC pulse

When the AC pulses have been interrupted for 2 pulses, reset start is performed. (Judgment is performed once with the main loop.)

7.2.2 SINGLE UNIT OPERATION METHODS

■ Single unit operation method for the DVD center unit (HTZ-C7)

For the items (2) and (3) of the following three items, there are two methods.

(1) Supply of +5.6 V

This is always required, as it is the power supply for the microcomputer. Please supply this from an external power supply.

(2) Supply of +12 V

This is for operation of the relay for supply of the AC of the DVD center unit.
(2-1) Please supply this from an external power supply. (Fig. 1)
(2-2) Substitution is possible by directly short-circuiting the relay. (Fig. 2)

(3) IR supply

This is for supply of IR. This is not required for servicing only with the keys of the main unit.
(3-1) Please connect the “remote control light reception jig GGF1270”. (Please supply +5 V from the external power supply of the above item (1). (Fig. 1)
(3-2) Substitution is possible by wired input from “equipment with SR-OUT” to “SR-OUT” of the DVD center unit. (This is “SR-OUT”, but the circuit also functions as “SR-IN”. For normal SR operation, GND of AUDIO or VIDEO must be connected.)

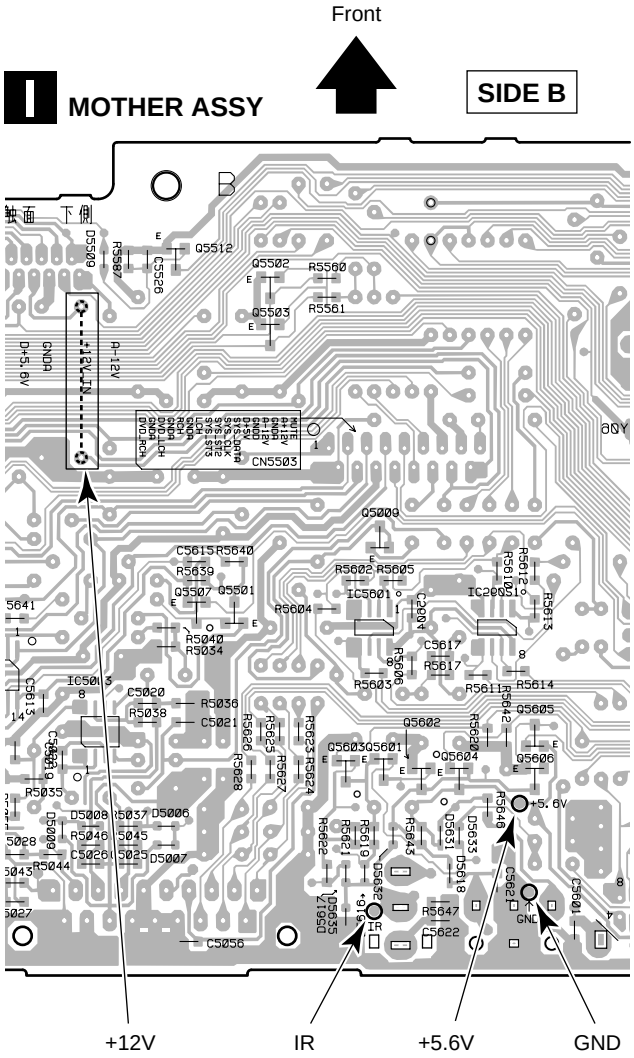

Fig. 1 MOTHER Assy (seen from the solder side)

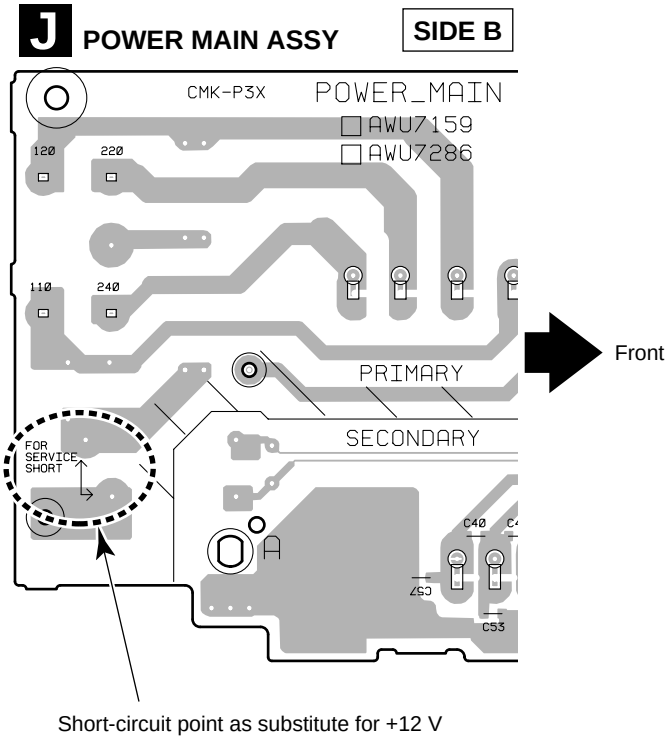

Fig. 2 POWER MAIN Assy (seen from the solder side)

■ Single unit operation of the powered subwoofer unit (HTZ-SW7)

(1) When the display unit is connected

When the display unit is connected, there are no other special connections.
The display unit has a remote control light receiver.

(2) When the display unit is not connected

When the display unit is not connected, the “remote control light reception jig GGF1270” must be connected. Please connect it to the point shown in Fig. 3.

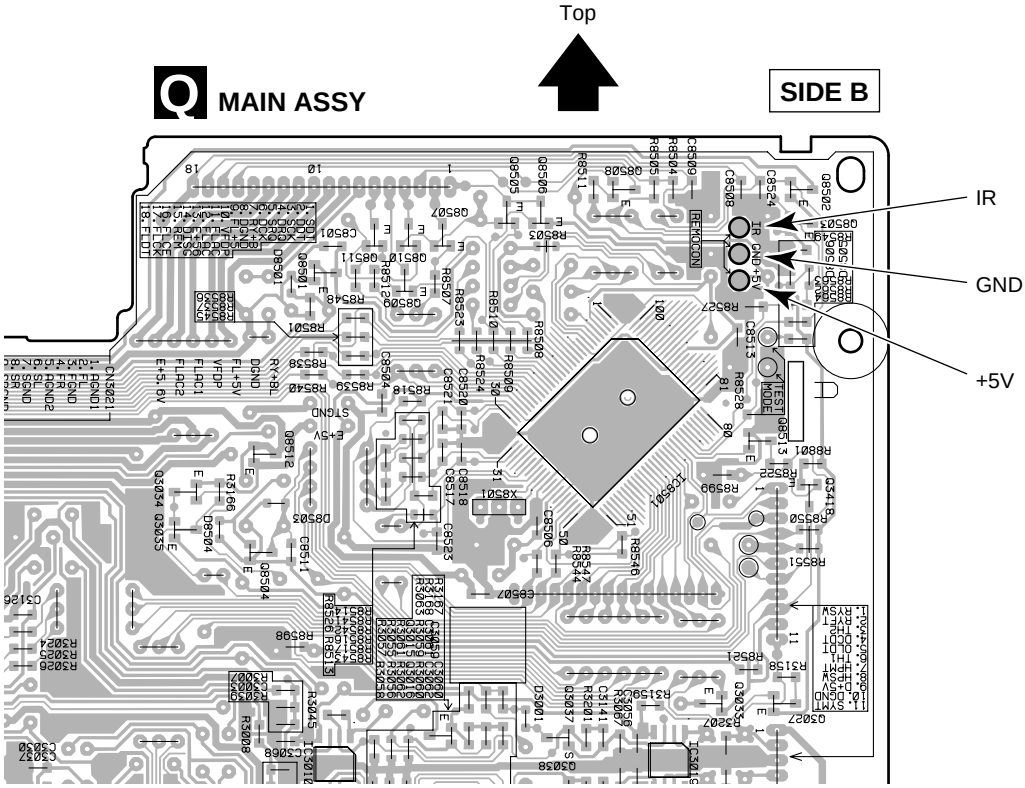

Fig. 3 Main assembly (seen from the solder side)

Cautions for making service connections

When power is to be supplied from an external power supply and when the relay is to be short-circuited forcibly, always disconnect the system cable between the DVD center unit and the subwoofer to prevent equipment breakage.
When the DVD center unit and the subwoofer both are present at the time of servicing, servicing in normal mode (user used condition) is recommended except for DVD test mode. (Test modes other than the DVD test mode are not supported when both units are connected.)

7.2.3 DISASSEMBLY

■ DVD Center Unit (HTZ-C7)

<< PRECAUTIONS >>

Be sure to disconnect the power cable from the AC outlet whenever removing the card flexible cable from the connector for maintenance, etc. Hold the both sides of the card flexible cable with both hands to disconnect the cable straight. (Even if the power has been switched OFF, previously charged voltage may remain in the capacitor, etc. If the electrodes of the card flexible cable and those of the connector come in contact by accident, a malfunction may occur.)

Special tools to be prepared

Hexagon key wrench
(2 mm across flats)

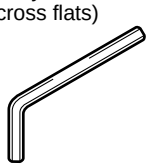

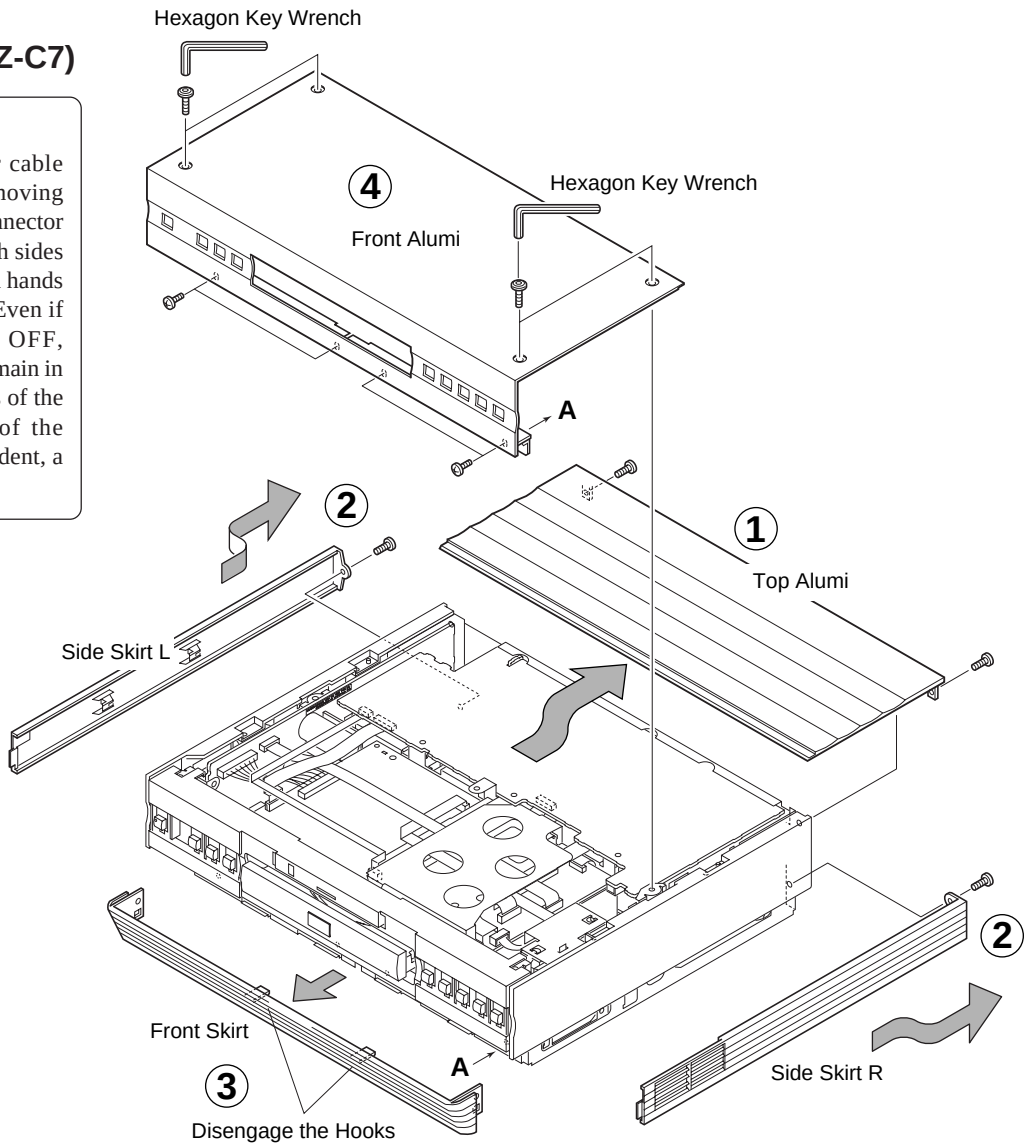

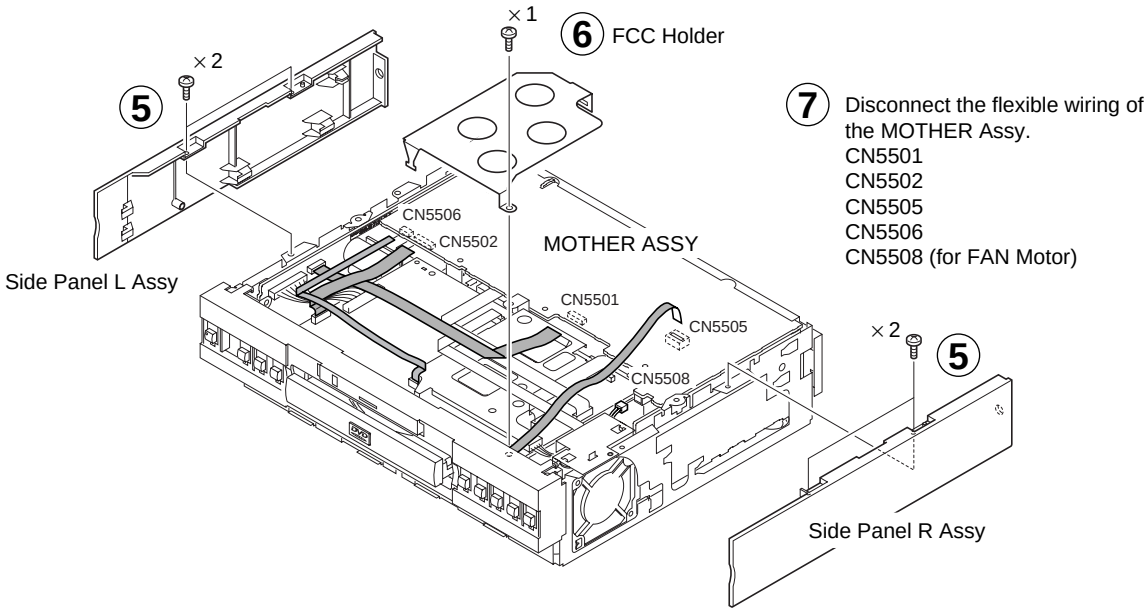

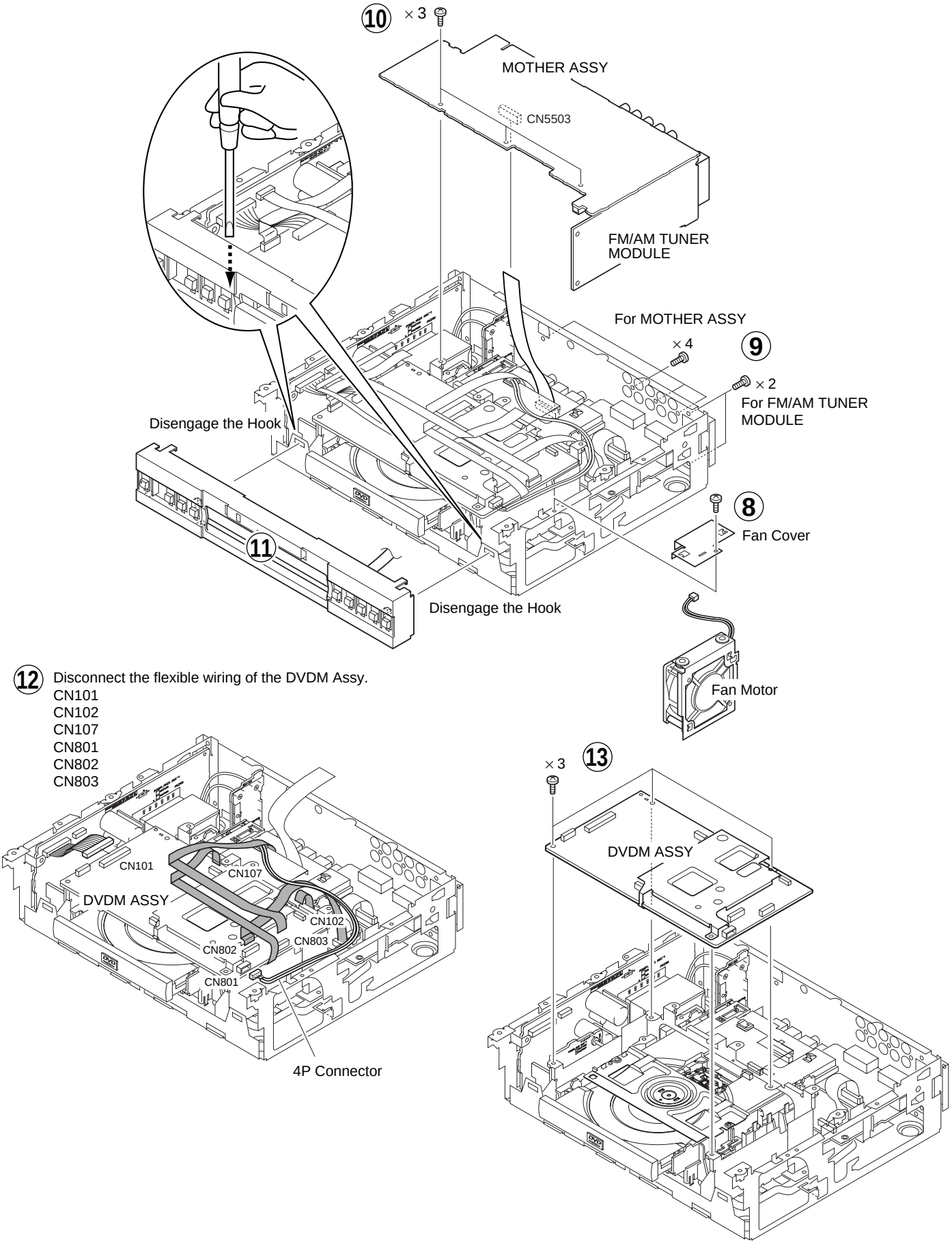
10
× 3
MOTHER ASSY
CN5503
FM/AM TUNER MODULE
For MOTHER ASSY
× 4
9
× 2
For FM/AM TUNER MODULE
Disengage the Hook
8
Fan Cover
11
Disengage the Hook
Fan Motor
12
Disconnect the flexible wiring of the DVDM Assy.
CN101
CN102
CN107
CN801
CN802
CN803
CN101
CN107
DVDM ASSY
CN102
CN803
CN802
CN801
4P Connector
× 3
13
DVDM ASSY

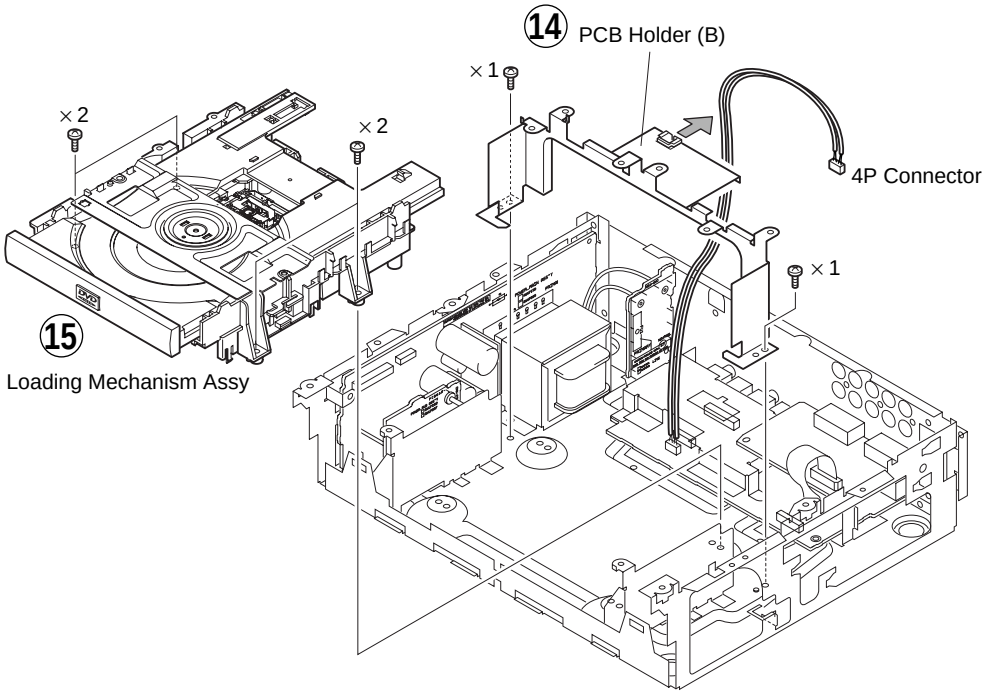
14 PCB Holder (B)
× 1
× 2
× 2
4P Connector
× 1
15
Loading Mechanism Assy

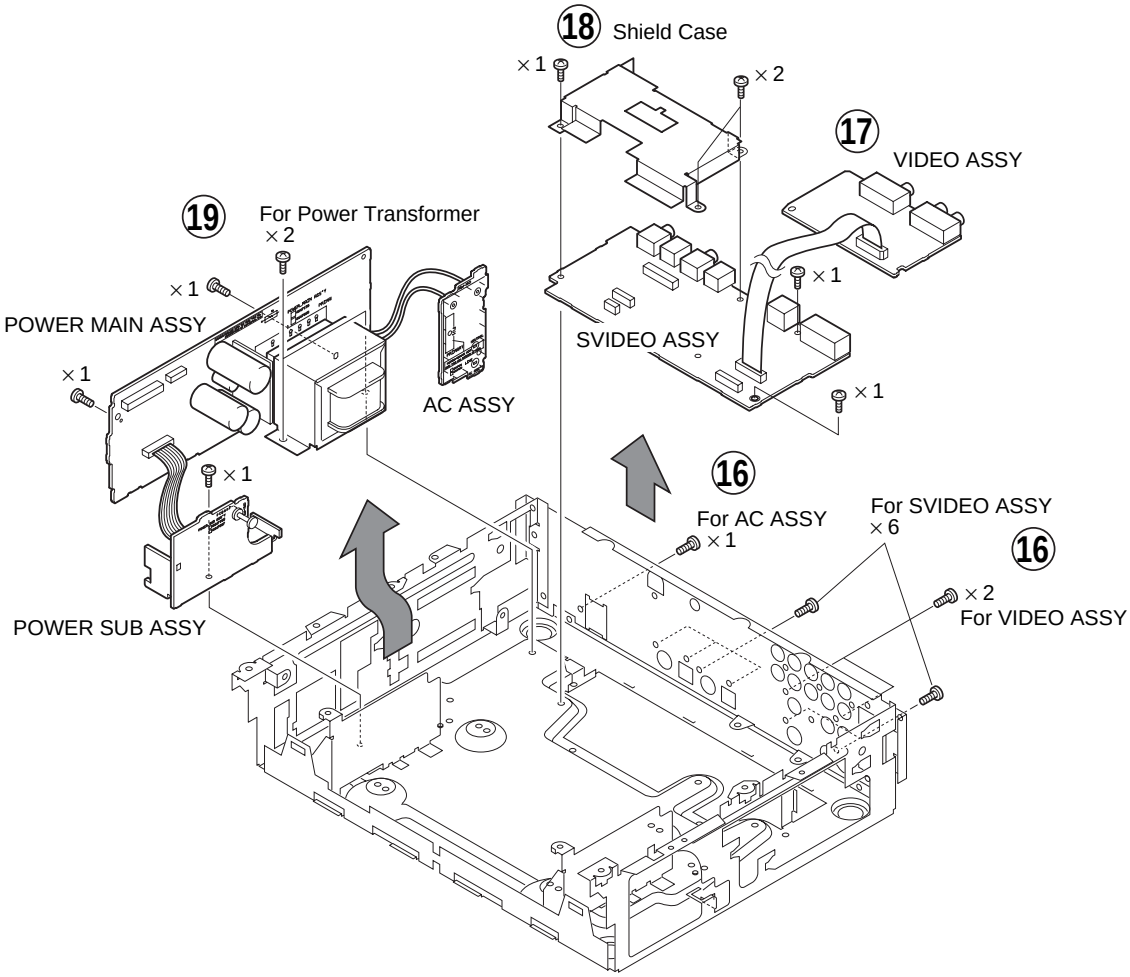
18 Shield Case
× 1
× 2
17
VIDEO ASSY
19
For Power Transformer
× 2
× 1
POWER MAIN ASSY
× 1
SVIDEO ASSY
× 1
AC ASSY
× 1
16
For AC ASSY
× 1
For SVIDEO ASSY
× 6
16
× 2
For VIDEO ASSY
POWER SUB ASSY

■ Powered Subwoofer (HTZ-SW7)

Special tools to be prepared

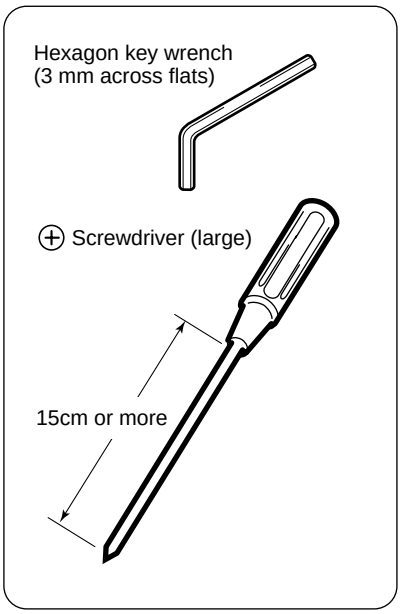

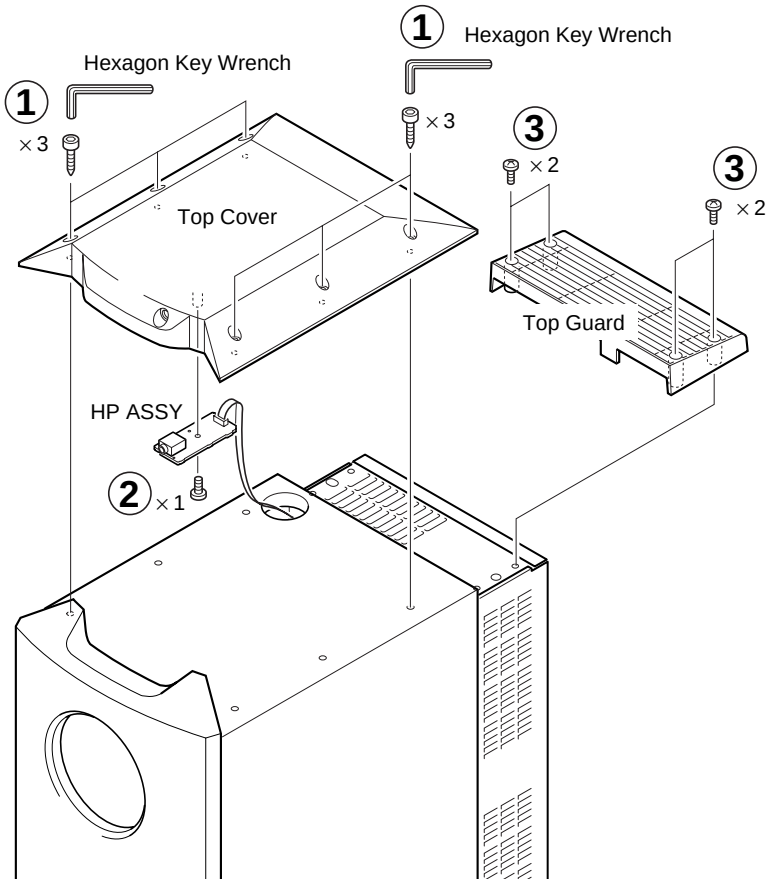

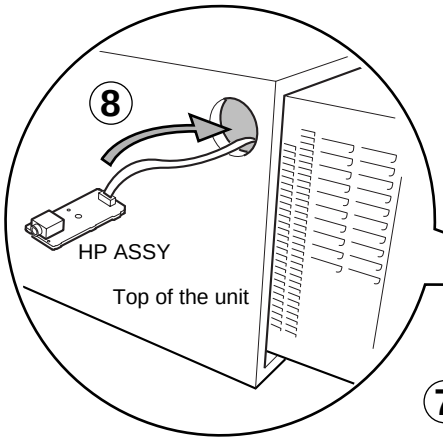

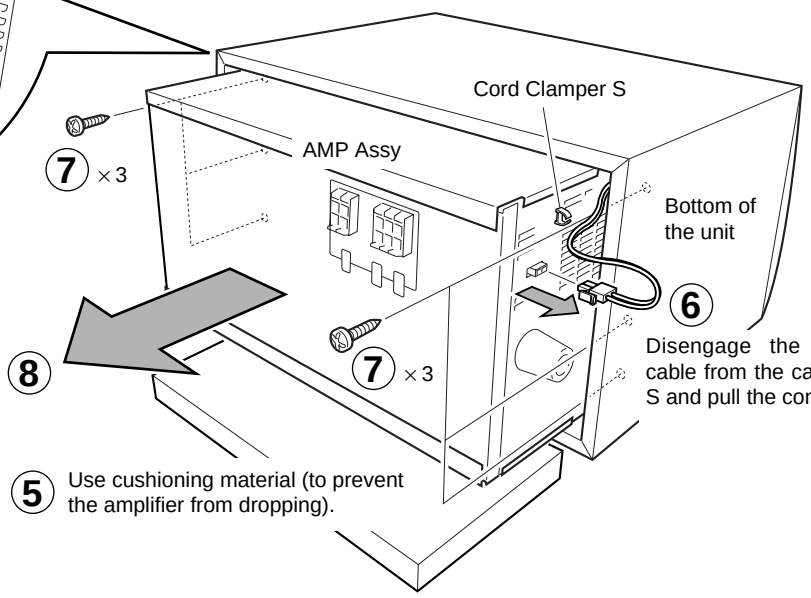

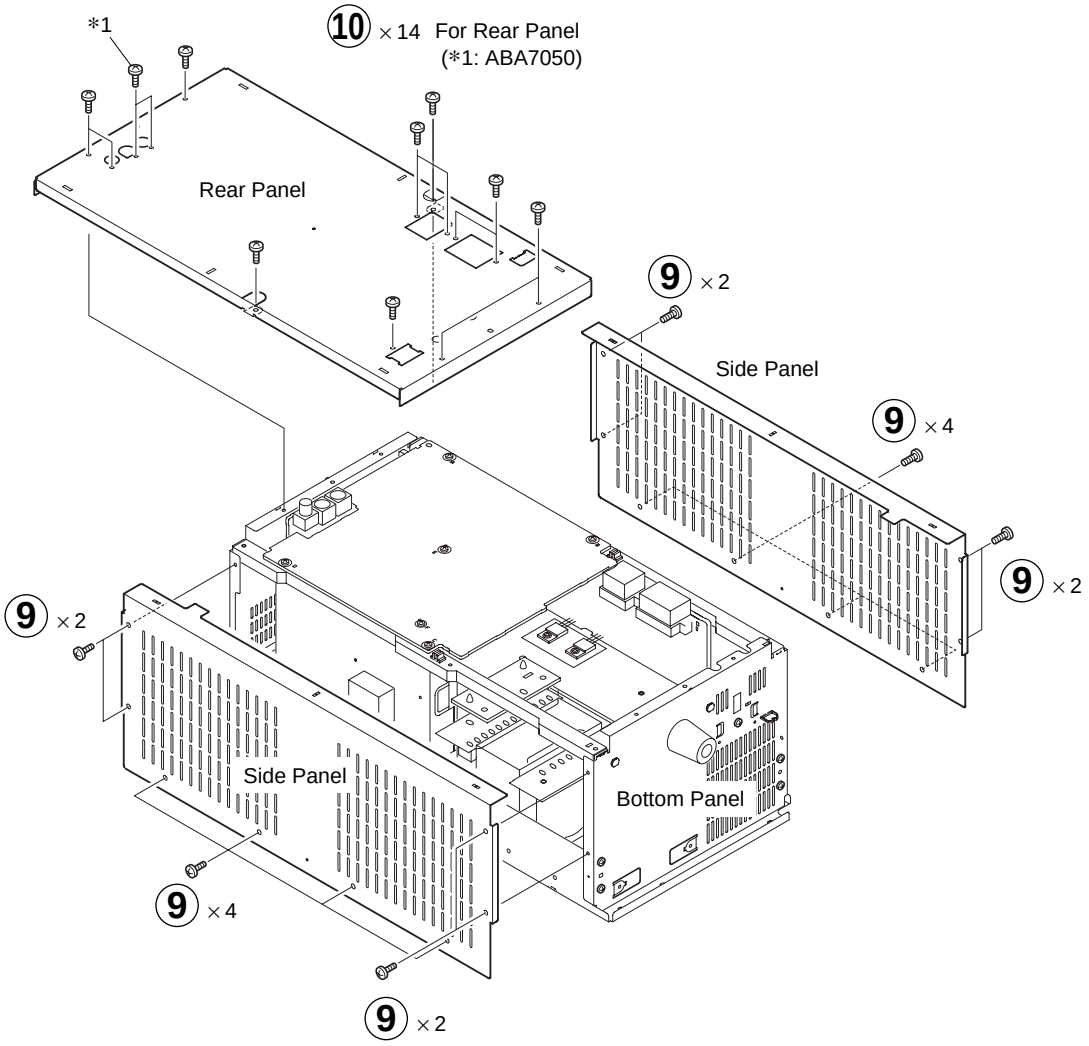

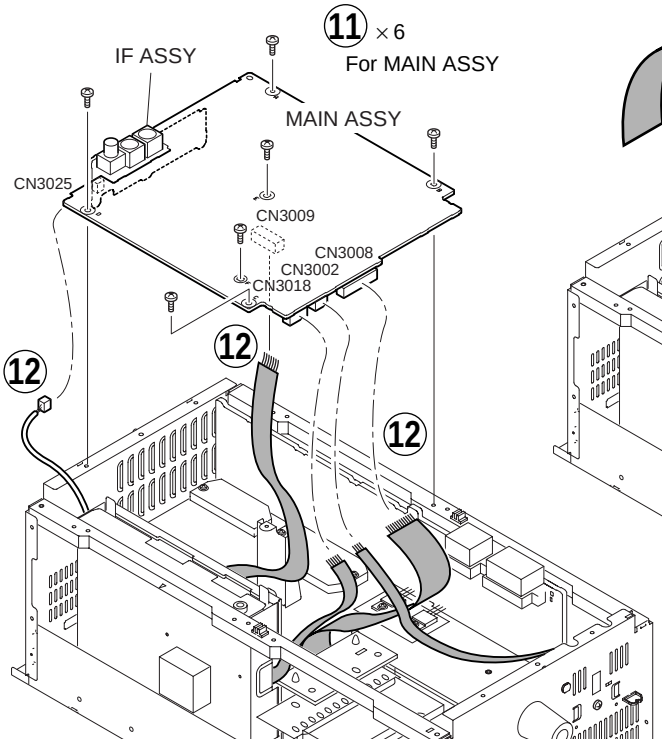

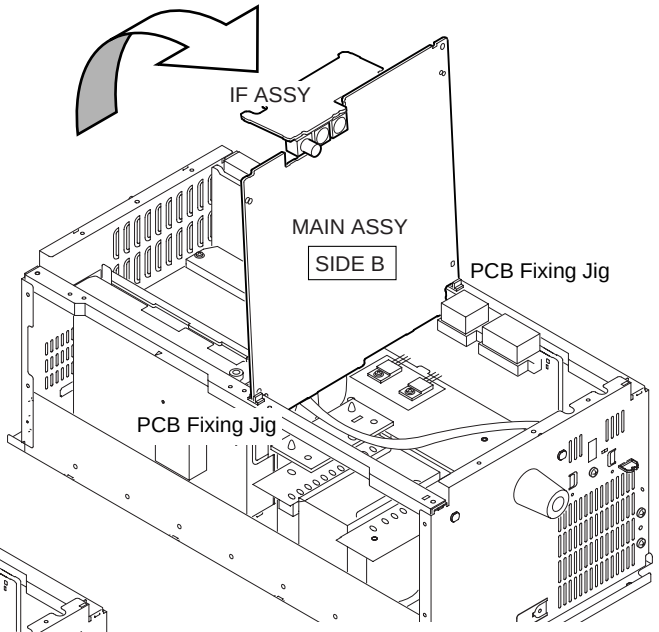

Before disconnecting the connector, insert the MAIN assy into the PCB fixing jig, so that the parts on the PCB can be exchanged.

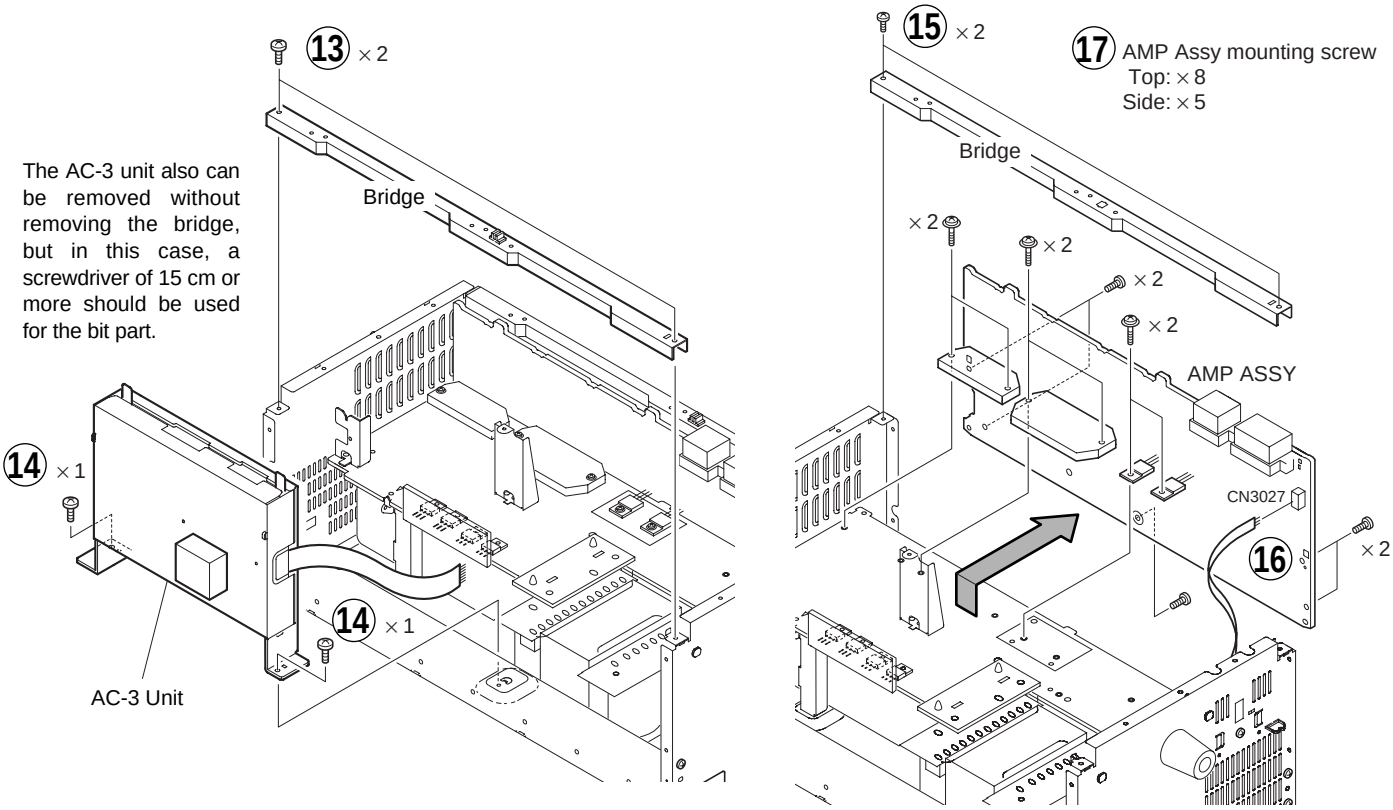

7.2.4 TEST MODE

■ DVD Center Unit (HTZ-C7)

1. Entry into test mode

Perform power ON after short-circuiting the "TEST MODE" pin of the MOTHER assy during power OFF or transmit "ESC+TEST" with the test mode remote control unit (GGF1067).
The power will be switched on and AV controller test mode will be entered. The standby LED of the main unit flashes during AV controller test mode. (Refer to Fig. 1.)

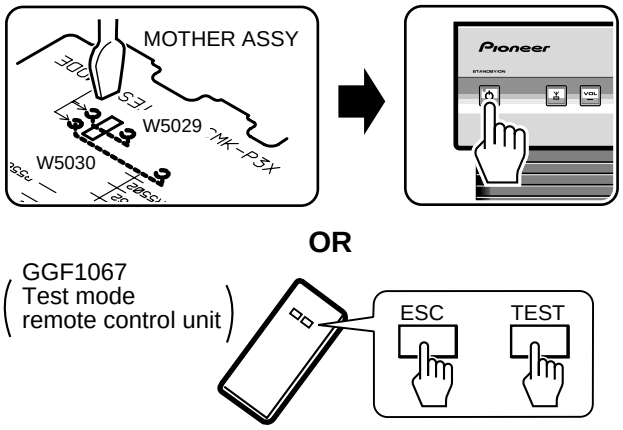

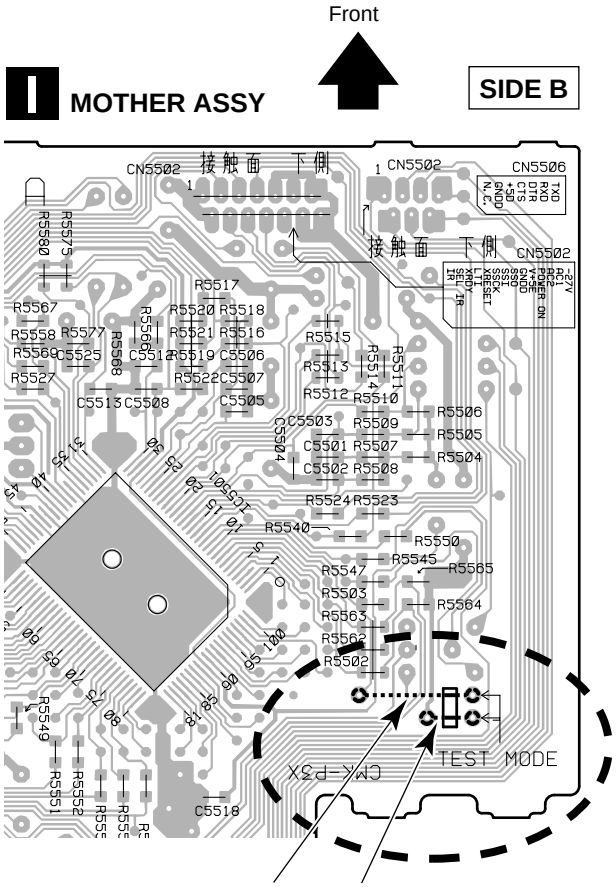

Fig. 1 Entry into test mode

2. Special Operations during Test Mode

■ Special operations during test mode

During AV controller test mode, the DVD player section can be operated with the single unit DVD remote control (component code $A3), which normally does not function. Also, when "ESC + TEST" is transmitted during AV controller test mode with the LD servicing test remote control, DVD test mode will be entered.
The operation is equivalent to the operation for the single unit player DV-505. Power OFF is performed when "ESC" is transmitted with the LD servicing test remote control during DVD test mode.

■ Function switching during test mode

As this unit has no function keys on the unit body, "VOL +" and "VOL –" on the unit body are used for function switching during AV controller test mode.

■ Switching of DVD, tuner, MD, audio 1, and audio 2

The DVD function is active at the time of test mode ON. When "VOL +" on the unit body is pressed, the function can be switched in the sequence of DVD → tuner → MD → audio 1→ audio 2.
When "VOL –" on the unit body is pressed, the function can be switched in the sequence of audio 2 → audio 1 → MD → tuner → DVD. Here, several seconds may be required for switching from DVD to tuner, tuner to DVD, tuner to MD, and MD to tuner. As key input is not accepted during switching, the function switching key should be pressed slowly and with slightly longer intervals. As there is no function indication, provide video or audio input and confirm that the function has been switched.

■ Automatic presetting of tuner and station memory

The contents of the station memory preset automatically when entering into test mode are shown below.

ST1, FM	88.5 MHz
ST2, FM	89.5 MHz
ST3, AM	954 kHz
ST4, AM	1062 kHz
ST5, FM	88.0 MHz

■ DVD remote operation

The DVD player operates with the single unit DVD remote control (component code $A3). In the same way as at the time of normal operation, "ESC + TEST" from the LD service remote control can be used to enter into the same test mode as with the single unit DVD player. In this case, power OFF will occur with the next reception of "ESC".

Note 1
DVD → TUNER → MD → AUDIO1 → AUDIO2 → .....
At the time of the above switching, several seconds are required to switch from DVD to TUNER. When "VOL +/–" is switched during this time, the function will not be switched. Please wait several seconds before switching.

Notes 2

● How to select "VIDEO1 ANALOG"
AUDIO2 – (VOL+) → VIDEO1 ANALOG

● How to select "VIDEO1 DIGITAL"
(Switch once to VIDEO2 and then use VOL- to return to VIDEO1.)
AUDIO2 – (VOL+) → VIDEO1 ANALOG – (VOL+) → VIDEO1 ANALOG – (VOL+) → VIDEO2 ANALOG – (VOL-) → VIDEO1 DIGITAL

● How to select "VIDEO2 ANALOG"
AUDIO2 – (VOL+) → VIDEO1 ANALOG – (VOL+) → VIDEO1 ANALOG – (VOL+) → VIDEO2 ANALOG

● How to select "VIDEO2 DIGITAL"
(Perform power OFF/ON after setting to the second of VIDEO2. At the time of power ON, "ESC+TEST" must be used to enter into test mode.)
AUDIO2 – (VOL+) → VIDEO1 ANALOG – (VOL+) → VIDEO1 ANALOG – (VOL+) → VIDEO2 ANALOG – (VOL+) → VIDEO2 ANALOG

When this setting has been made, VIDEO2 DIGITAL will be obtained by power OFF with the POWER button and power ON in test mode by "ESC+TEST".

● Switching between video 1 and video 2
Audio analog input and digital input for video 1 and 2 can be switched with "VOL +" and "VOL –" on the main unit and power ON/OFF.

● How to select video 1 analog audio input
Press "VOL +" on the main unit once at the time of audio 2 selection.

● How to select video 1 digital audio input
Press "VOL +" on the main unit three times at the time of audio 2 selection.

● How to select video 2 analog audio input
Press "VOL +" on the main unit three times at the time of audio 2 selection.

● How to select video 2 digital audio input
At the time of audio 2 selection, press "VOL +" on the main unit four times, use the POWER switch on the main unit for power OFF (power OFF can be confirmed by the standby LED on the main unit changing from flashing to steady lighting), and transmit "ESC+TEST" from the test mode remote control for LD servicing for power ON in AV controller test mode, to switch to video 2 digital audio input. Video 2 analog audio input is selected at the time of power OFF.)

■ Powered Subwoofer (HTZ-SW7)

1. Test Mode Use Conditions

Use of the test mode with connected DVD center unit is not possible. In that case, do not use test mode, but normal operation.

■ When there is a display unit

When there is a display unit, use is possible simply by connection to an outlet.

■ When there is no display unit

The remote control light reception jig (GGF1270) must be connected. Display at the time of operation is not possible.

2. How to enter into test mode

With connection to an outlet and a display unit (or the remote control light reception jig), the power will be switched on and SF controller test mode will be entered when "ESC+TEST" is transmitted from the test mode remote control for LD servicing.

■ Display during test mode

After power ON, all FL are lit. Afterwards, TEST MODE is displayed except at the time of operation. The display at the time of operation is the same as during normal operation.

■ How to leave test mode

When "ESC" is transmitted from the test mode remote control for LD servicing (GGF1067), the power is switched off. The same effect can be obtained when the plug is pulled from the outlet.

■ Initial values of the set values for each mode and their adjustment ranges

Shown in Fig. 2.

Function	Initial Value	Adjustment Range
VOLUME	0	0 to 35
BASS	0	–6 to +6
TREBLE	0	–6 to +6
FRONT L LEVEL	0	–10dB to +10dB
FRONT R LEVEL	0	–10dB to +10dB
REAR L LEVEL	0	–10dB to +10dB
REAR R LEVEL	0	–10dB to +10dB
SUB WOOFER LEVEL	0	–10dB to +10dB
CENTER LEVEL	0	–10dB to +10dB
REAR L DELAY	0	0, 5, 10, 15 ms (15, 20, 25, 30 ms with Prologic)
REAR R DELAY	0	0, 5, 10, 15 ms (15, 20, 25, 30 ms with Prologic)
CENTER DELAY	0	0, 1, 2, 3, 4, 5 ms
MIDNIGHT	OFF	ON/OFF
DSP MODE	OFF	GAME, SPORT, MUSIC, MOVIE
ONE-TOUCH SURROUND	CENTER	FRONT +2 to REAR +2
DOLBY PRO-LOGIC	OFF	ON/OFF

Fig. 2 Initial Values for Each Mode
(Setting to the above initial values has been done at the time of power ON.)

■ Operation during test mode

During test mode, all operations can be performed with the test remote control for LD servicing (GGF1067). The operation is shown in Fig. 3.

■ Key layout diagram for the servicing remote control unit (GGF1067)

	■/▲ A816 VOL –	DIG/ANA A80C VOL +	DISP A843 DRC ON/OFF
	ESC A85F ESC	TEST A85E TEST MODE	CX A80E TEST TONE ON/OFF
REP. A A848 LEVEL SW –	REP. B A844 LEVEL SW +	STEREO A84A LEVEL REAR –	P. RUN A856 LEVEL REAR +
A. MON A81E BASS –	TV/LDP A80F BASS +	SPEED – A846 TREBLE –	SPEED + A847 TREBLE +
SIDE. A A84D DOLBY PRO-LOGIC ON/OFF	SIDE. B A84E ONE-TOUCH SURROUND FRONT	R. SCAN A811 ONE-TOUCH SURROUND CENTER	F. SCAN A810 ONE-TOUCH SURROUND FRONT
R. ×3 A859 DSP MODE TOGGLE	F. ×3 A851 DSP MODE OFF	R. STEP A850 DSP MODE EFFECT –	F. STEP A854 DSP MODE EFFECT +
R. SKIP A853 LEVEL LEFT –	F. SKIP A852 LEVEL LEFT +	PAUSE A818 LEVEL RIGHT –	PLAY A817 LEVEL RIGHT +
1 A801 LEVEL SW –	2 A802 LEVEL SW +	3 A803 	CLEAR A845 DEFAULT
4 A804 LEVEL Ls –	5 A805 LEVEL Ls +	6 A806 LEVEL Rs –	+ 10 A81F LEVEL Rs +
7 A807 DELAY CENTER –	8 A808 DELAY CENTER +	9 A809 LEVEL CENTER –	0 A800 LEVEL CENTER +
FRM/TIM A841 DELAY Ls –	CHAP A840 DELAY Ls +	CHP/TIM A813 DELAY Rs –	SEARCH A842 DELAY Rs +

Fig. 3 Operation method for the powered subwoofer of the LD test mode remote control unit
(Drawn up according to the key layout for the test mode remote control unit for LD servicing)

7.3 BLOCK DIAGRAM

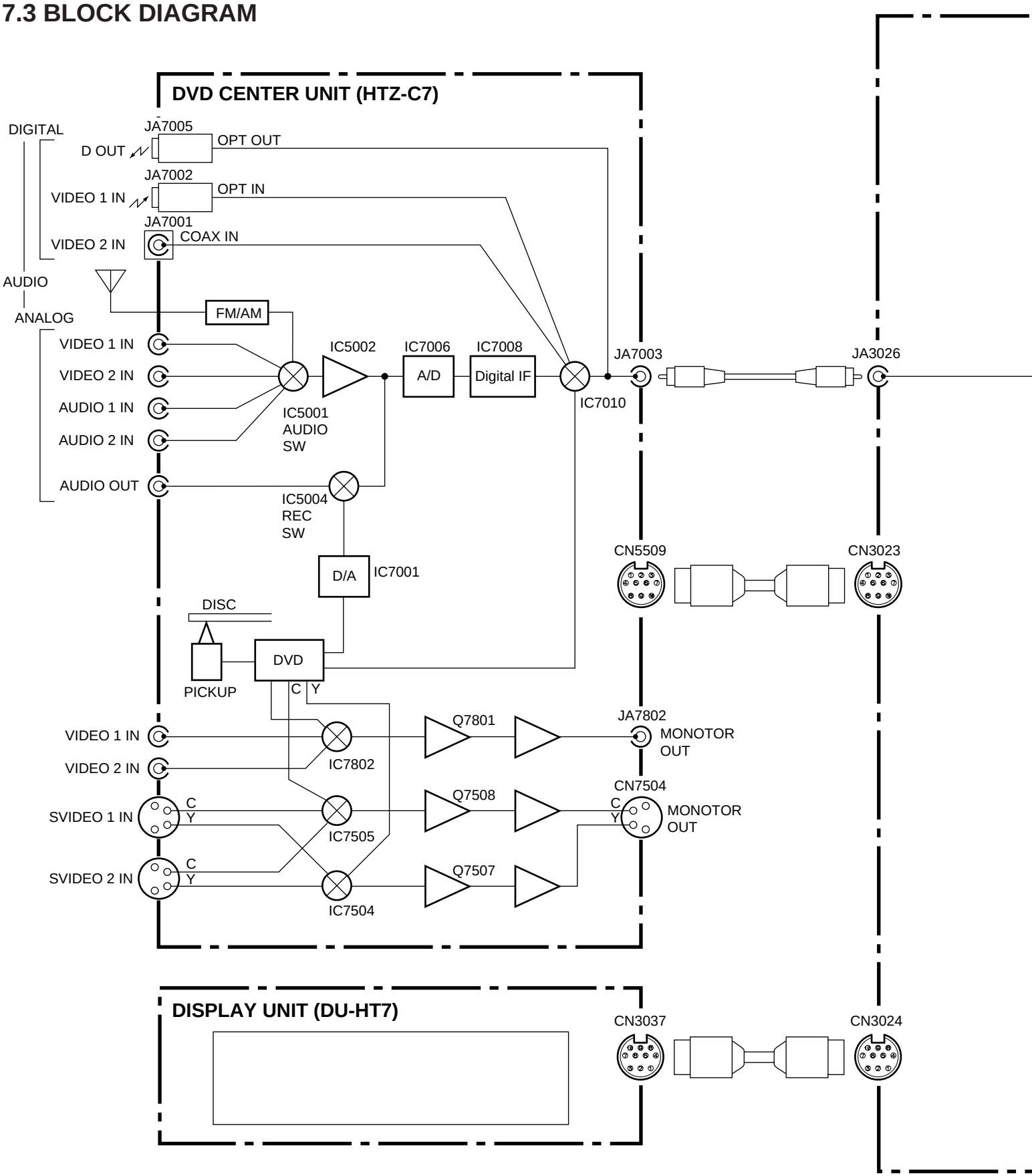

POWERED SUBWOOFER (HTZ-SW7)

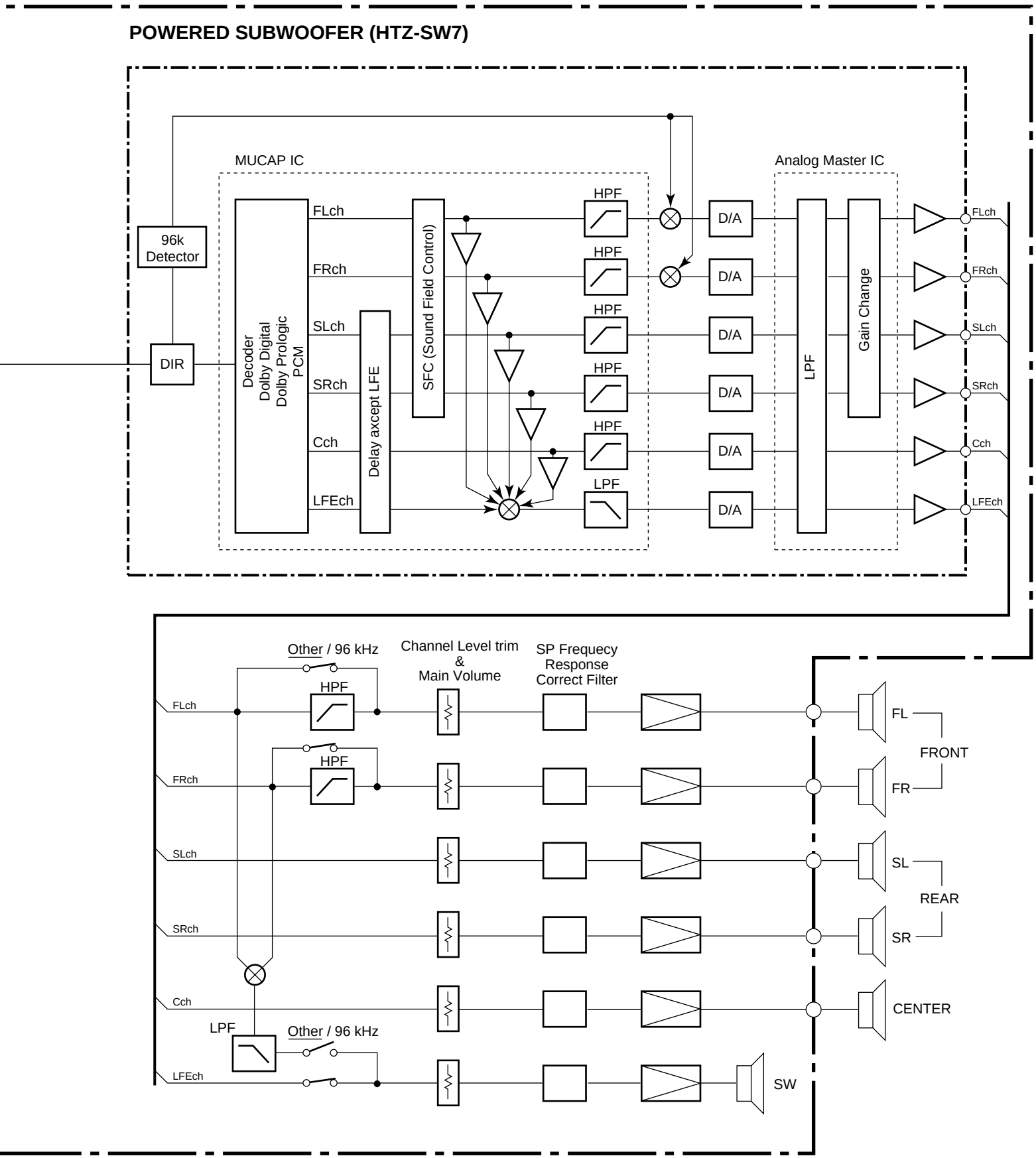

7.4 REMOTE CONTROL UNIT [CU-HT005 (AXD7232)]

7.4.1 EXPLODED VIEWS AND PARTS LIST

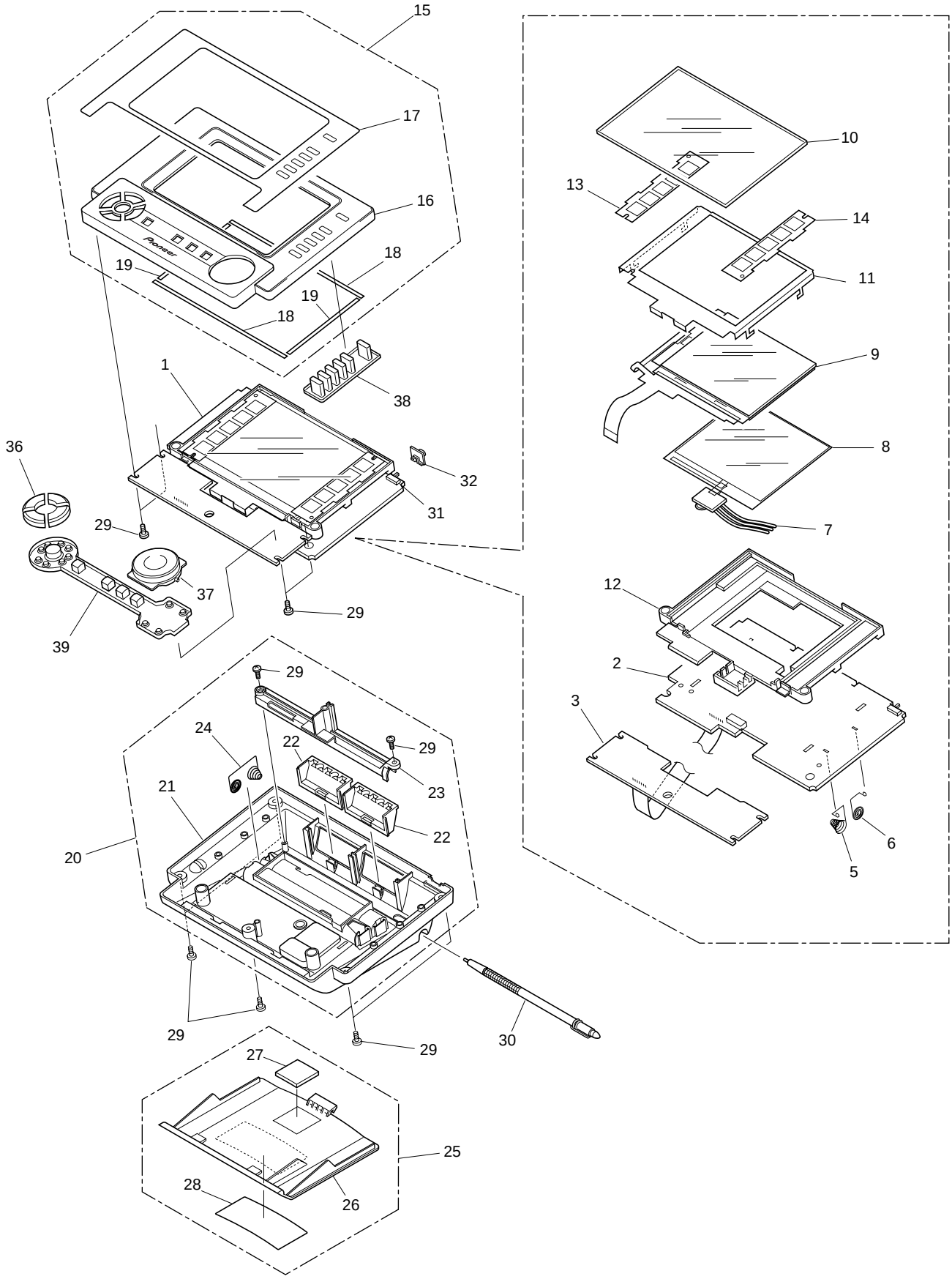

NOTES :
- *Parts marked by "* NSP *" are generally unavailable because they are not in our Master Spare Parts List.*
- *The ⚠ mark found on some component parts indicates the importance of the safety factor of the part. Therefore, when replacing, be sure to use parts of identical designation.*
- *Screw adjacent to ▼ mark on the product are used for disassembly.*

■ REMOTE CONTROL UNIT PARTS LIST

Mark	No.	Description	Part No.
	1	PWB Assy	RRC4–7251–01
	2	P. W. Board A	401RRC19301R
	3	P. W. Board B	401RRC19401R
	4	• • • • •	
	5	Terminal A	411RRC15801R
	6	Terminal B	411RRC15901R
	7	Jumper Cable	E–AA1446–001
	8	EL Module	E–AA1457–001
	9	LCD Module	E–EC1026–001
	10	Touch Panel	NTX01005701R
	11	Frame	501RRC01901R
	12	LCD Holder	501RRC01701R
	13	Seal A	204RRC10301R
	14	Seal B	204RRC10302R
	15	Upper Case Assy	RRC4–7251–02
	16	Case A	102RRC24301R
	17	Name Plate	201RRC27001R
	18	Cushion A	701RRC04801R
	19	Cushion B	701RRC04901R
	20	Bottom Case Assy	RRC4–7251–03
	21	Case B	102RRC24401R
	22	Filter	811RRC08001R
	23	Pen Holder	501RRC01801R
	24	Terminal	413RRC11201R
	25	Battery Cover Assy	RRC4–7251–04
	26	Battery Cover	103RRC14701R
	27	Cushion C	701RRC03501R
	28	Label	204RRC10604R
	29	Screw	ABA2005022#2
	30	Touch Pen	E–AA1445–001
	31	Slide Switch	JSB1220–0111
	32	Slide Knob	301RRC07801R
	33	• • • • •	
	34	• • • • •	
	35	• • • • •	
	36	Key Top A	302RRC09901R
	37	Key Top B	302RRC10001R
	38	Rubber Sheet A	421RRC20701R
	39	Rubber Sheet B	421RRC20801R

7.4.2 SCHEMATIC DIAGRAM (REFERENCE DOCUMENTATION)

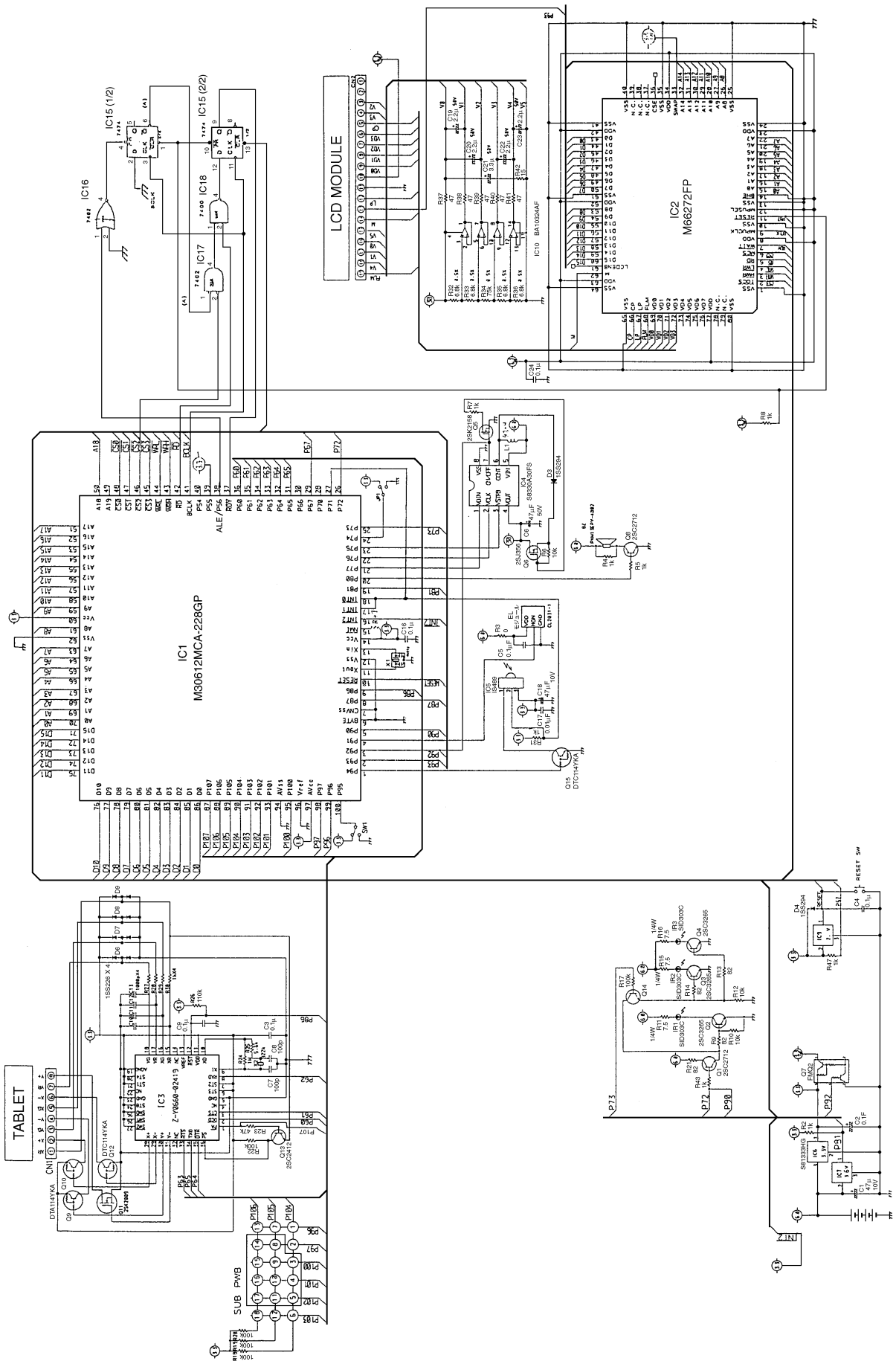

8. PANEL FACILITIES AND SPECIFICATIONS

■ PANEL FACILITIES

■ DVD Center Unit (HTZ-C7)

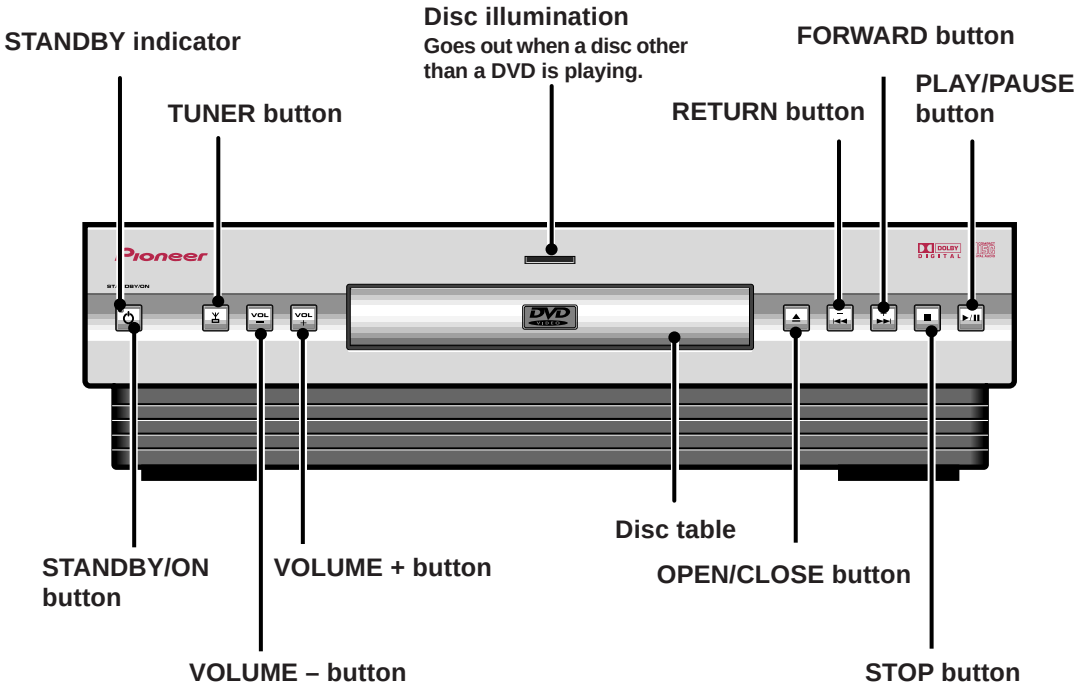

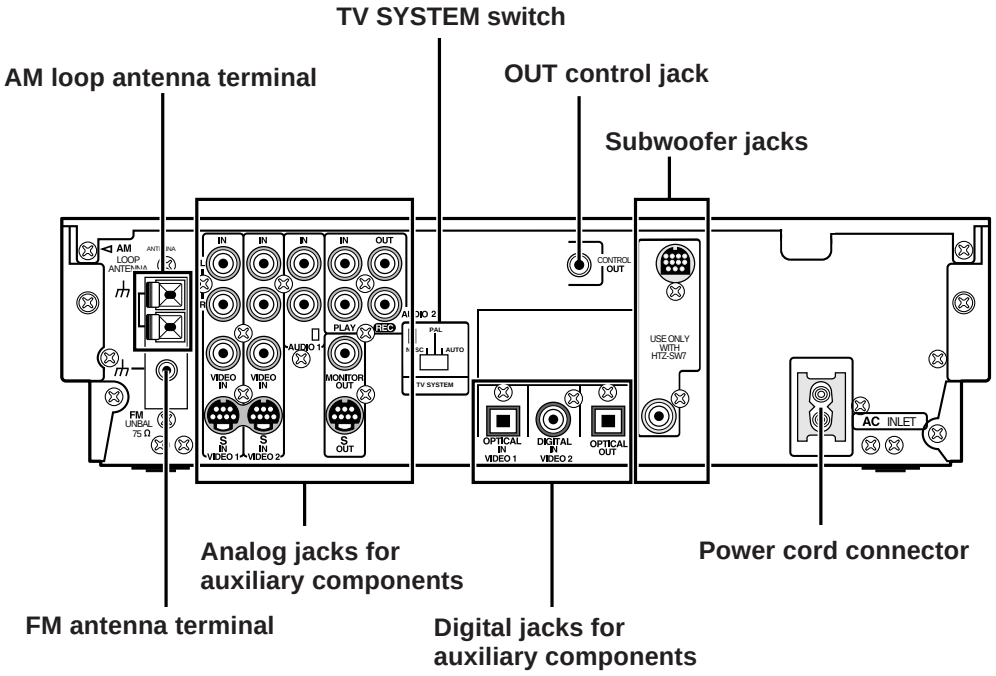

■ Powered Subwoofer (HTZ-SW7)

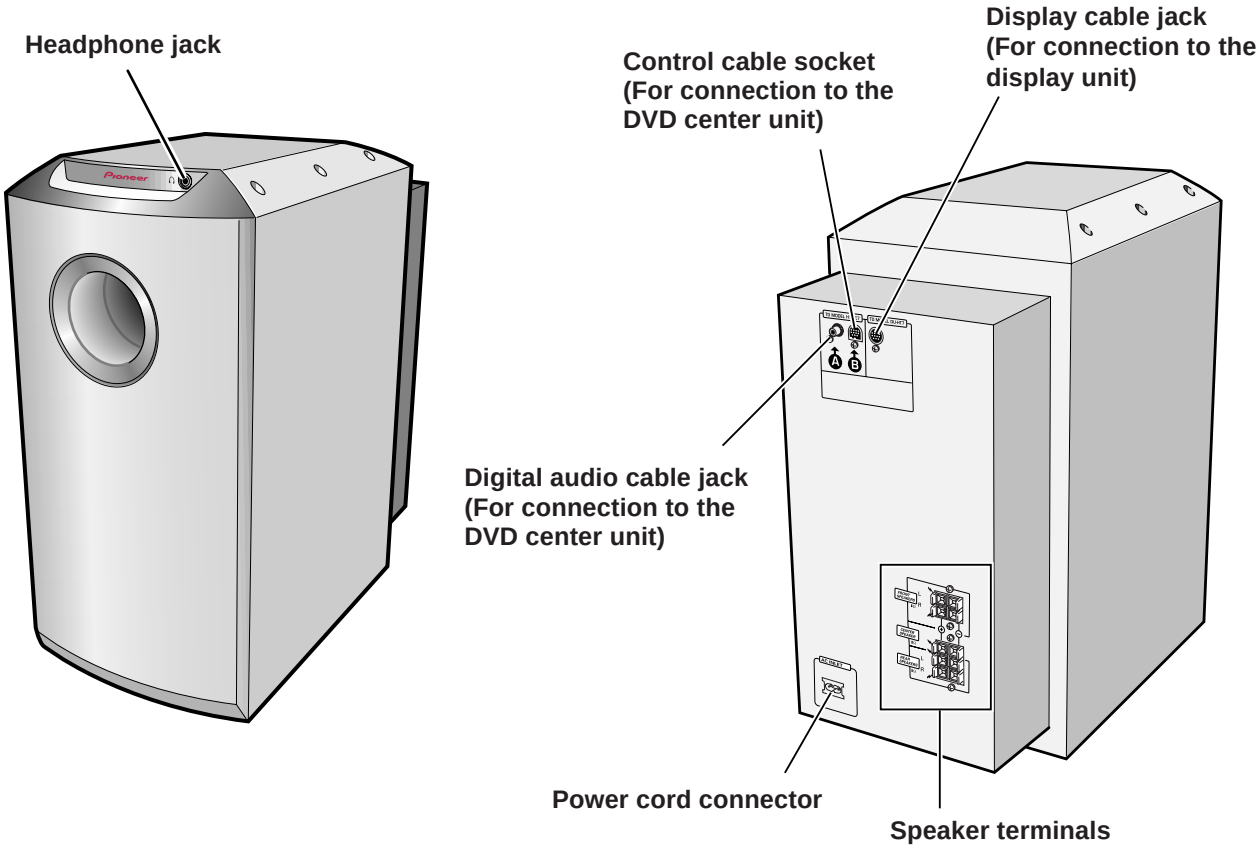

■ Display Unit (DU-HT7)

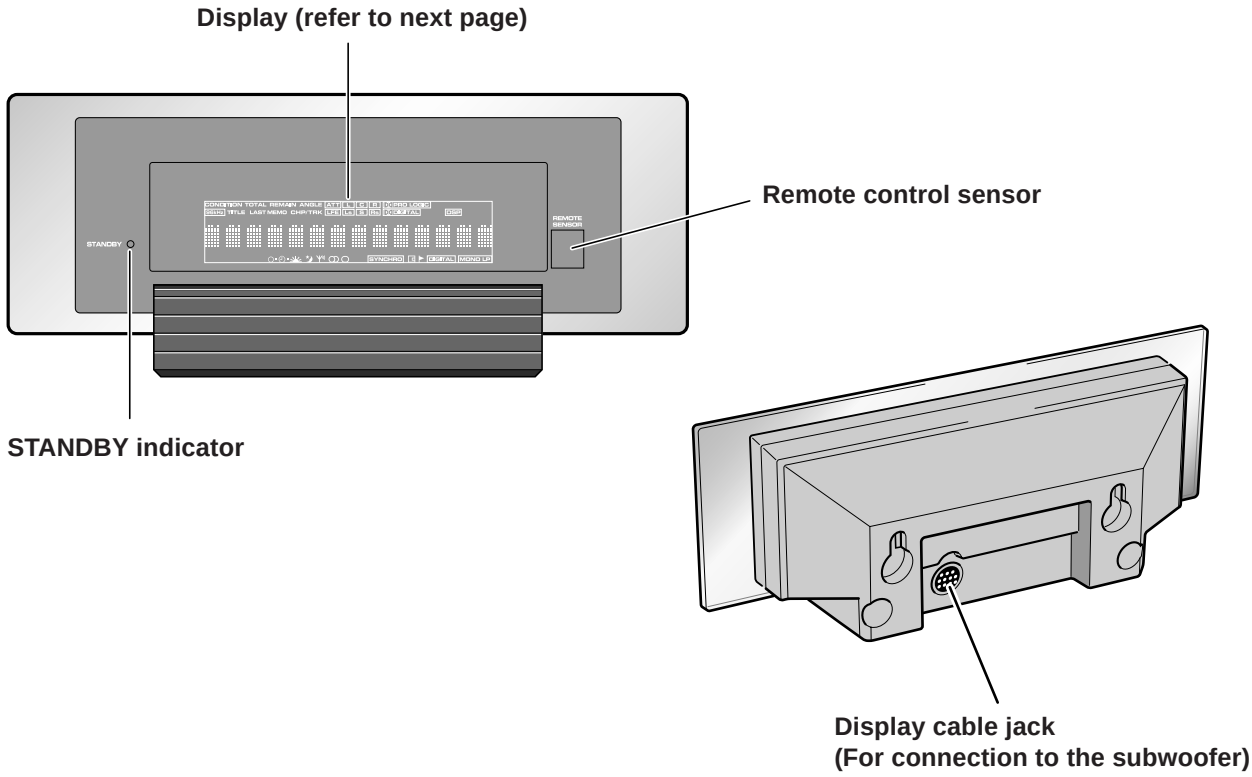

● Display

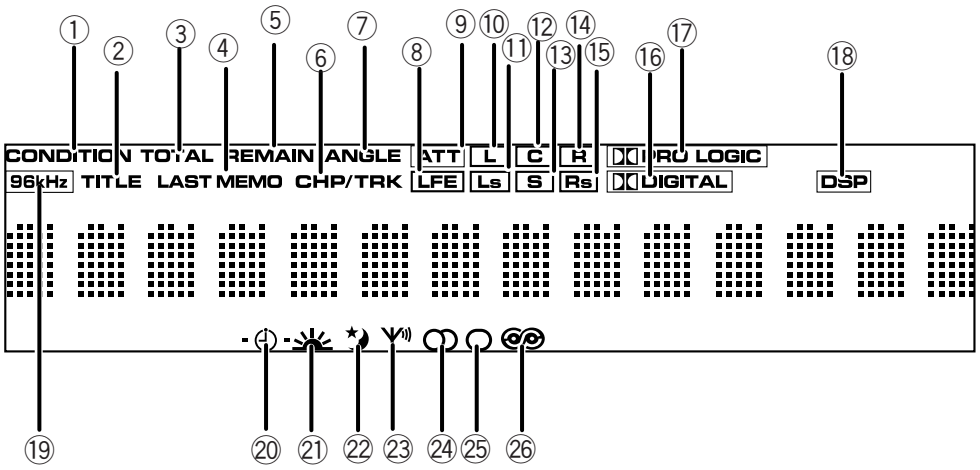

① **CONDITION**
Indicates playback settings (condition) are memorized.

② **TITLE**
Indicates a title playback.

③ **TOTAL**
Indicates total playback time of disc side currently playing.

④ **LAST MEMO**
Indicates that the location on disc where you last stopped watching is memorized.

⑤ **REMAIN**
Indicates remaining playback time.

⑥ **CHP/TRK**
Indicates playback of a chapter or track.

⑦ **ANGLE**
Indicates multi-angle playback.

⑧ **LFE**
LFE lights when the unit is set for Dolby Digital playback and there's a source channel set for LFE (Low Frequency Effect) reproduction. During actual playback, [LFE] lights.

⑨ **ATT**
Lights when the attenuator is ON.

⑩ **L** ⑪ **Ls** ⑫ **C** ⑬ **S** ⑭ **R** ⑮ **Rs**
Set channels light.

⑯ **DIGITAL**
Indicates Dolby Digital playback is in progress.

⑰ **PRO LOGIC**
Indicates Dolby PRO LOGIC playback is in progress.
* When Digital and PRO LOGIC light simultaneously
Indicates Dolby Digital playback of a Dolby Pro Logic encoded source is in progress.

⑱ **DSP**
Lights during DSP mode selection.

⑲ **96 kHz**
Lights during playback of a disc with a sampling frequency of 96kHz.

⑳ **Timer ON**
Lights during Wake-up Timer setting/operation.

㉑ **Wake-up Timer**
Lights when the Wake-up Timer is ON, and flashes during Wake-up Timer operation.

㉒ **Sleep Timer**
Lights when the Sleep Timer is ON and during Sleep Timer operation.

㉓ **Station Reception**
Lights during broadcast station reception.

㉔ **Stereo Station Reception**
Lights during stereo broadcast station reception.

㉕ **Mono**
Lights when the Monaural mode is selected.

㉖ **RDS**
Lights when this unit is set to display RDS information.

■ Remote Control Unit

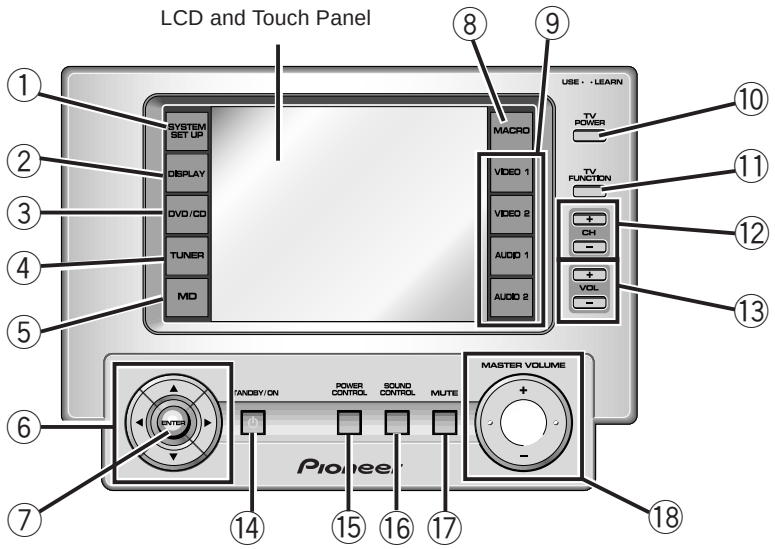

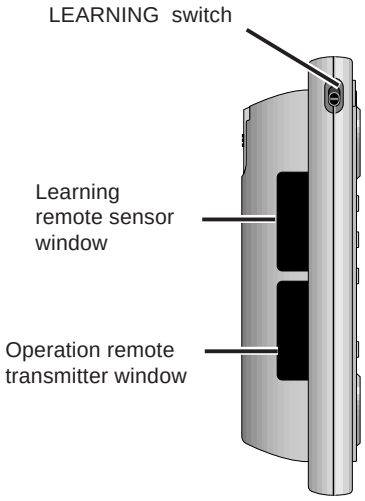

Top View

System Buttons

① **SYSTEM SET UP button**
Displays the Set Up menu.

② **DISPLAY button**
Displays the Timer menu.

Function Buttons

③ **DVD/CD button**
Displays the DVD/CD menu and switches DVD/CD functions.

④ **TUNER button**
Displays the Tuner menu and switches tuner functions.

⑤ **MD button**
Displays the MD menu.

Cursor Buttons

⑥ **Cursor buttons**
Function differs depending on the selected function.

⑦ **ENTER button**
Function differs depending on the selected function.

Macro Button

⑧ **MACRO button**
Displays the Macro menu.

Auxiliary Function Buttons

⑨ **VIDEO 1, VIDEO 2, AUDIO 1, AUDIO 2 buttons**
Displays menus for components preset in the VIDEO 1, VIDEO 2, AUDIO 1, and AUDIO 2 buttons, and switches between these functions.

LCD and Touch Panel

Provides function displays and a touch panel.

TV Buttons

⑩ **TV POWER button**
Switches TV power ON/OFF.

⑪ **TV FUNCTION button**
Displays a TV operation menu, and switch TV input ON/OFF.

⑫ **CH buttons +/–**
Change the TV channel.

⑬ **VOL button +/–**
Change TV volume level.

System Control Buttons

⑭ **STANDBY/ON button**
Switches power to the system ON/OFF.

⑮ **POWER CONTROL button**
Displays the Power Control menu.

⑯ **SOUND CONTROL button**
Displays the Sound Control menu.

⑰ **MUTE button**
Temporarily cuts volume level.

⑱ **MASTER VOLUME button**
Changes system volume level. (There are no LCD indications.)

LEARNING Switch

Use for the Learning and Macro functions.

Learning Remote Sensor Window

Use for the Learning and Macro functions. Use while pointing it at the remote transmitter window of another component's remote control.

Operation Remote Transmitter Window

Point at the display unit when using the remote control to operate this system.

SPECIFICATIONS

Amplifier Section

Continuous Power Output

SURROUND

(RMS) Front, Center, Rear ..... 30 W, per channel (1 kHz, 0.8% T.H.D., 8 Ω)
(RMS) Sub woofer ..... 45 W (100 kHz, 0.8% T.H.D., 8 Ω)
(DIN) Front, Center, Rear ..... 30 W, per channel (100 kHz, 1% T.H.D., 8 Ω)
(DIN) Sub woofer ..... 43 W (100 kHz, 1% T.H.D., 8 Ω)

Speakers Section

Satellite speakers HTZ-ST7

Type ..... Sealed, antimagnetic (EIAJ)•
Speaker ..... 7cm (cone type)
Nominal impedance ..... 8 Ω
Frequency range ..... 110 to 20,000 Hz
Max. input ..... 30 W (EIAJ)

Powered subwoofer HTZ-SW7

Type ..... 20 cm (8 in.) bass reflex floor type, antimagnetic (EIAJ)•
Speaker
Woofer ..... 20 cm (cone type)
Nominal impedance ..... 8 Ω
Frequency range ..... 30 Hz to 350 Hz
Max. input ..... 50 W (EIAJ)

DVD Player (Audio) Section

S/N ratio ..... 115 dB (EIAJ)
Dynamic range ..... 97 dB (EIAJ)
Distortion 0.003%
Frequency response
48 kHz sampling ..... 4 Hz to 22 kHz
96 kHz sampling ..... 4 Hz to 44 kHz
Wow & flutter ..... Below measurable levels (±0.001% W.PEAK)

DVD Player (Video) Section

Output level ..... 1 Vp-p (75 Ω)
Video Y output level ..... 1 Vp-p (75 Ω)
Video C output level ..... 286 mVp-p (75 Ω)

DVD (Other jacks) Section

Digital optical output (PCM/ DD (optical)) ..... Optical connector
Control output ..... Minijack

Tuner Section

FM tuner

Frequency range ..... 87.5 MHz to 108.0 MHz
Antenna ..... 75 Ω unbalanced
Usable sensitivity ..... 14.3 dBf (1.4µV,75Ω)

AM tuner

Frequency range ..... 522 kHz to 1.602 kHz (9 kHz step)
Antenna ..... loop antenna (supplied)

Power Supply Section

Power requirements ..... AC 220 V to 230V, 50/60 Hz

DVD center

Power consumption ..... 37 W
Standby power consumption ..... 0 W

Powered subwoofer

Power consumption ..... 143 W
Standby power consumption ..... 2 W

Miscellaneous

DVD center unit

Dimensions ..... 320 (W) x 274 (D) x 89 (H) mm
Weight ..... 4.0 kg (8.8 lbs)

Powered subwoofer

Dimensions ..... 240 (W) x 445 (D) x 482 (H) mm
Weight ..... 15.2 kg

Satellite speakers

Dimensions ..... 150 (W) x 70 (D) x 90 (H) mm
Weight ..... 0.50 kg

Display

Dimensions ..... 210 (W) x 62 (D) x 86 (H) mm
Weight ..... 0.23 kg

Remote control

Dimensions ..... 168 (W) x 123 (D) x 42 (H) mm
Weight ..... 0.30 kg

Operating conditions:
Temperature ..... +5°C to +35°C
Humidity ..... 5% to 85% (without condensation)

Supplied Items

Remote control 1
Touch pen 1
Display unit 1
AM loop antenna 1
FM antenna 1
Feet 5
Digital audio cable 1
Video cable 1
Alkaline batteries (AA/LR6) 4
Power cord 1
Display cable 1
Control cable 1
Mini stands 5
Speaker cords (5 m) 3
Speaker cords (10 m) 2
Mounting screws (M4 x 12) 5
Bolts for covering holes (M4 x 6)(for sound quality ajustment) . 10
Cord labels 1
Non-skid pads 1
Operating instructions (Setting up the HTZ-7) 1
Operating instructions 1
Warranty 1

* ***Measured by Audio Spectrum Analyzer.***
* ***Design and specifications are subject to change without notice.***

● **Antimagnetic design (EIAJ) speaker system conforms to the basic EIAJ standards.**

NOTE:
Specification and design subject to possible modifications without notice due to improvements.

Accessories

HTZ-C7

- Remote control (CU-HT005) (AXD7232)

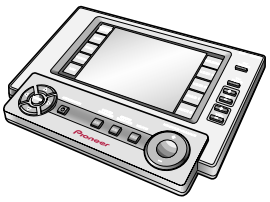

- AM loop antenna (ATB7009)

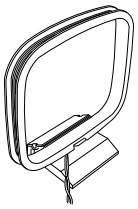

- Alkaline batteries (size AA/LR6) × 4

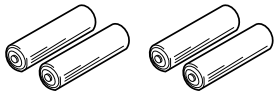

- Touch pen (EAA1445-001)

(Attached to the top part of the remote control on the rear.)

- FM antenna (ADH7005)

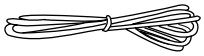

- Operating instructions (Setting up the HTZ-7)
- Operating instructions (Basic/Detailed)
- Warranty

HTZ-SW7

- Display unit (DU-HT7)

- Feet × 5 (SXK1046)

- Digital audio cable (ADE7028) (L= 3 m)

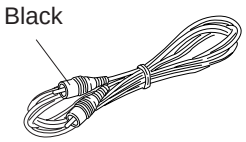

- Video cable (ADE7036) (L= 3 m)

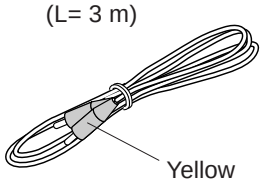

- Display cable (ADE7027) (L= 3 m)

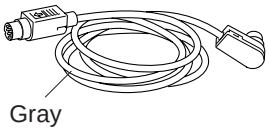

- Control cable (ADE7031) (L= 3 m)

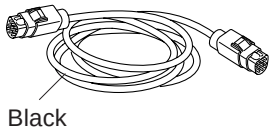

- Power cords × 2 (ADG1127)

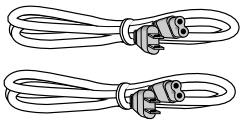

- Satellite speakers × 5 (HTZ-ST7/MY)

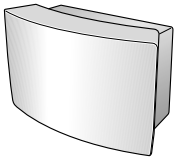

- Speaker cords
  5m (16 ft. 3 in.) × 3 (for center, front L-R speakers) (SDS1053) (L= 5 m)
  10m (32 ft. 6 in.) × 2 (for rear L-R speakers) (SDS1054) (L= 10 m)

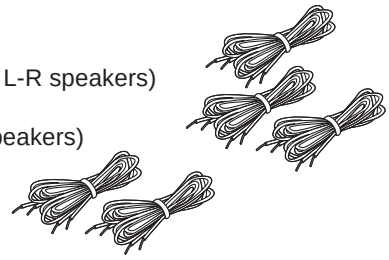

- Mini stands × 5 (SNK2312)

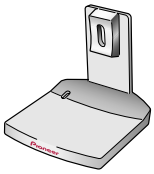

- Cord labels (SRW1066)

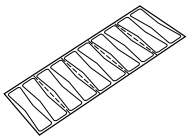

- Non-skid pads (SEP1189)

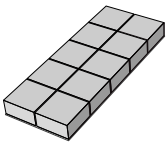

- Installation screws × 5 (BMZ40P120FMC)

- Sound quality adustment screws ×10 (BMZ40P060FMC)