LW/MW/FM STEREO RECEIVER

LX-434

www.hifiengine.com

Power supply ass'y AWR-062

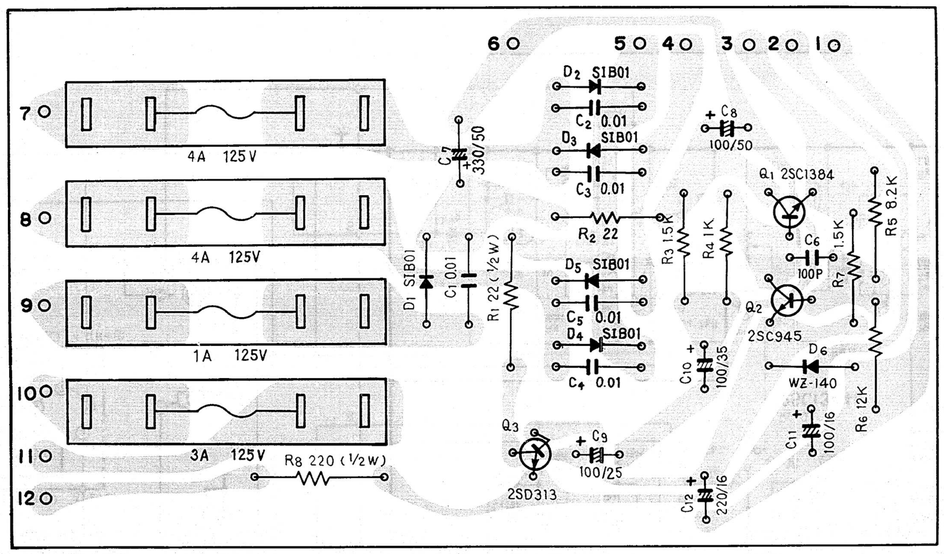

Tuner ass'y AWE-050

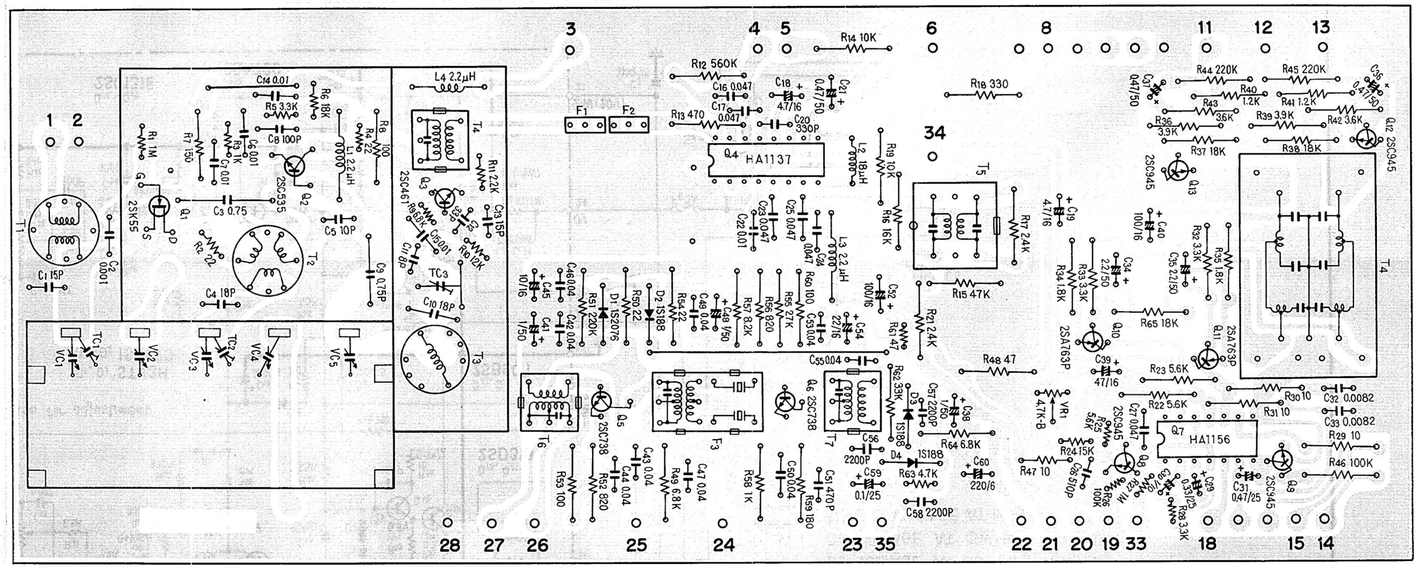

AM front end ass'y AWA-006

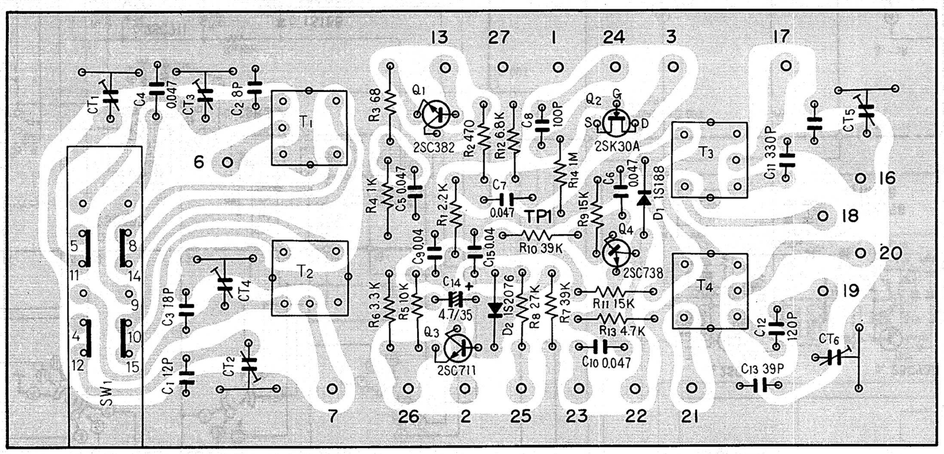

AF amp ass'y AWK-034

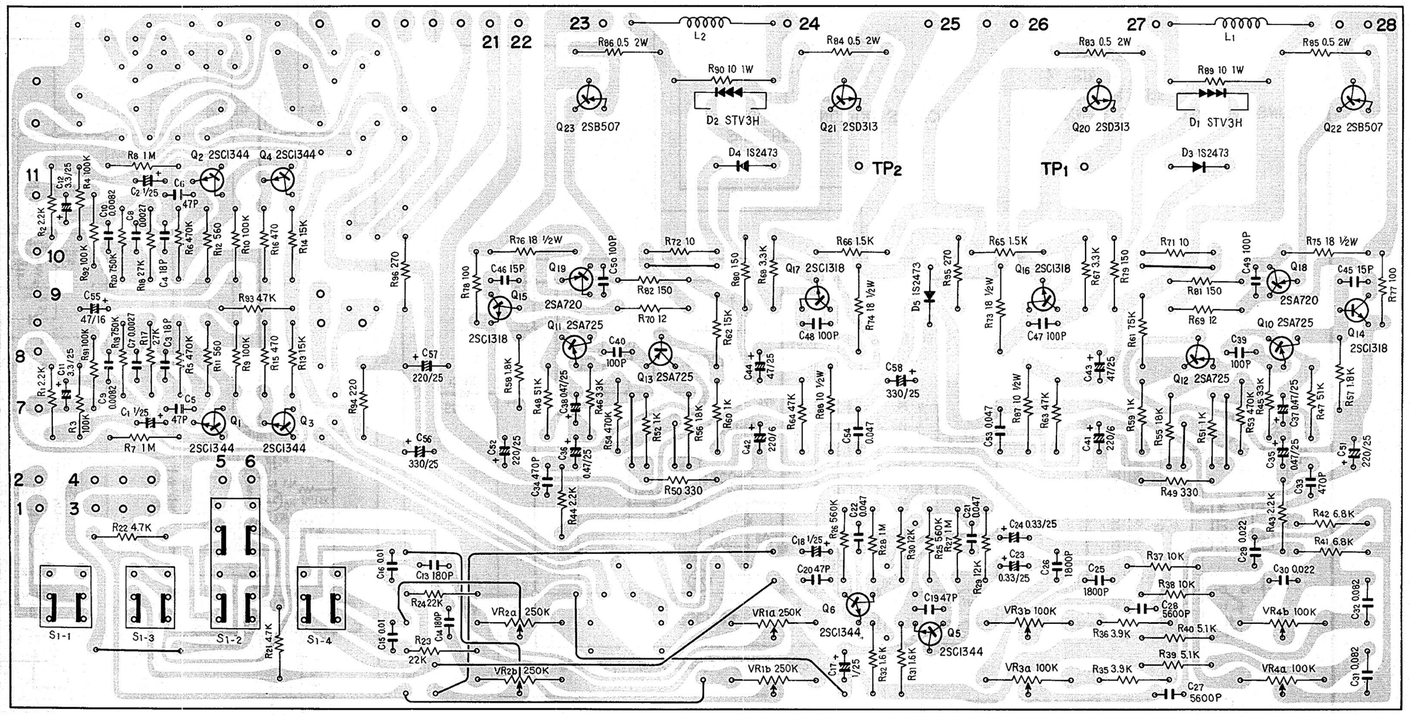

LX-434

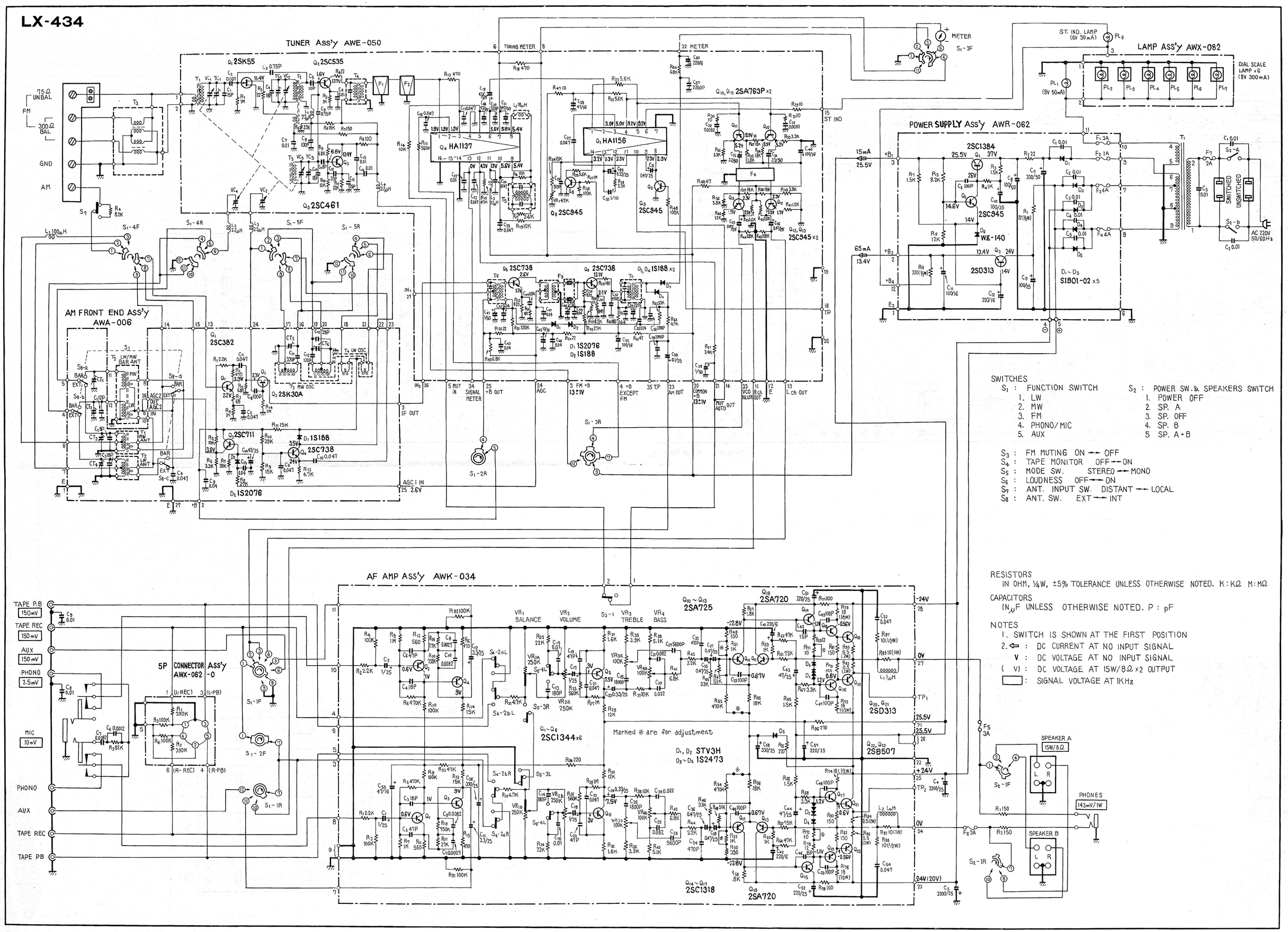
TUNER Ass'y AWE-050
AM FRONT END Ass'y AWA-006
AF AMP Ass'y AWK-034
POWER SUPPLY Ass'y AWR-062
LAMP Ass'y AWX-082
5P CONNECTOR Ass'y AWX-062-0
METER
S1-3F
ST. IND. LAMP (6V 30mA)
DIAL SCALE LAMP ×6 (8V 300mA)
75Ω UNBAL
FM
300Ω BAL
GND
AM
TAPE P.B 150mV
TAPE REC 150mV
AUX 150mV
PHONO 2.5mV
MIC 10mV
PHONO
AUX
TAPE REC
TAPE PB
SPEAKER A 15W/8Ω
SPEAKER B
PHONES 143mV/1W
AC 220V 50/60Hz
SWITCHES
S1 : FUNCTION SWITCH
1. LW
2. MW
3. FM
4. PHONO/MIC
5. AUX
S2 : POWER SW. & SPEAKERS SWITCH
1. POWER OFF
2. SP. A
3. SP. OFF
4. SP. B
5 SP. A+B
S3 : FM MUTING ON ⟷ OFF
S4 : TAPE MONITOR OFF ⟷ ON
S5 : MODE SW. STEREO ⟷ MONO
S6 : LOUDNESS OFF ⟷ ON
S7 : ANT. INPUT SW. DISTANT ⟷ LOCAL
S8 : ANT. SW. EXT ⟷ INT
RESISTORS
IN OHM, ¼W, ±5% TOLERANCE UNLESS OTHERWISE NOTED. K:KΩ M:MΩ
CAPACITORS
IN μF UNLESS OTHERWISE NOTED. P : pF
NOTES
1. SWITCH IS SHOWN AT THE FIRST POSITION
2. ⇦ : DC CURRENT AT NO INPUT SIGNAL
V : DC VOLTAGE AT NO INPUT SIGNAL
(V) : DC VOLTAGE AT 15W/8Ω×2 OUTPUT
▭ : SIGNAL VOLTAGE AT 1KHz
Marked ※ are for adjustment
D1, D2 STV3H
D3~D5 1S2473