QC-800A FVW

PIONEER

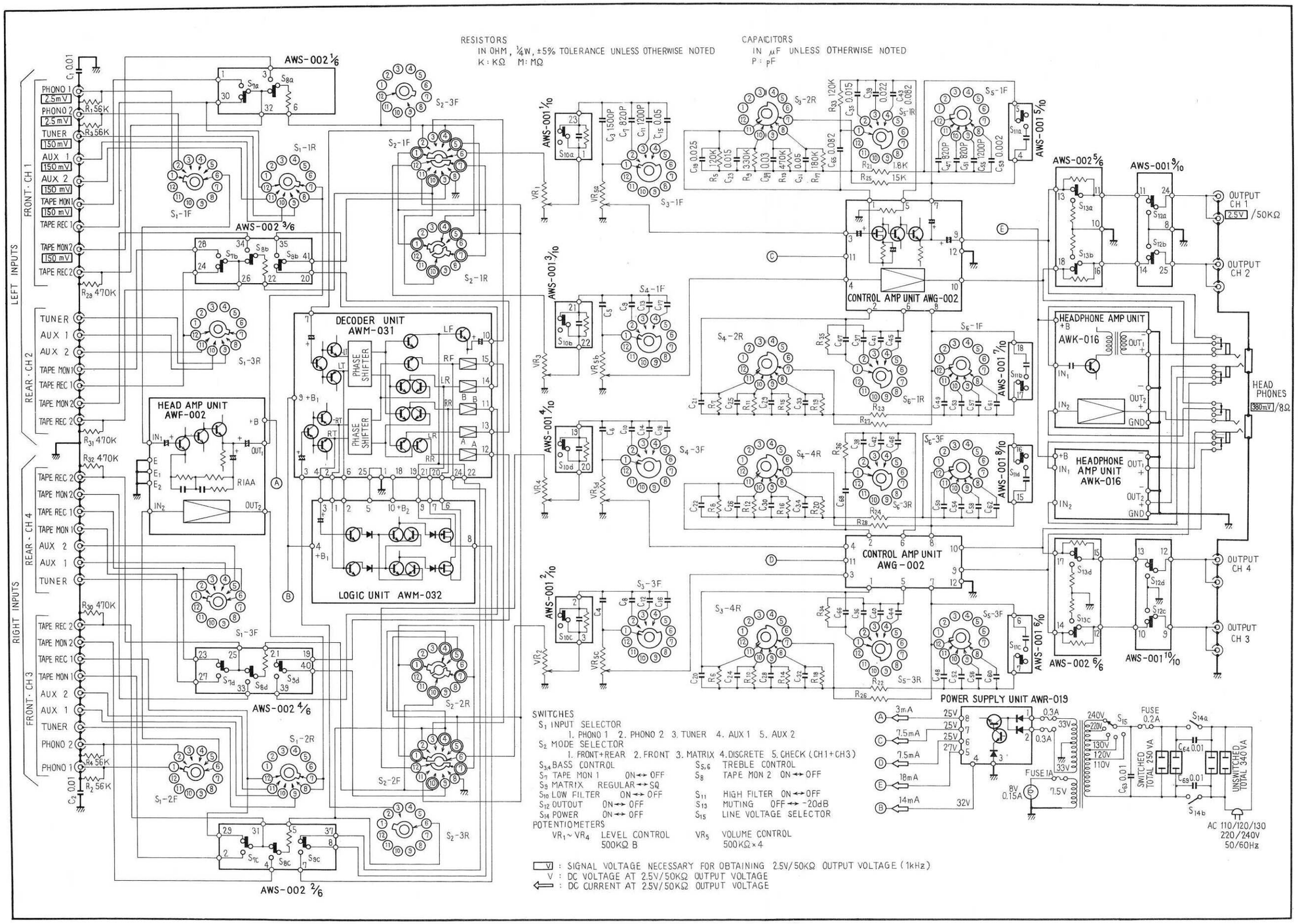

DECODER UNIT

AWM-031

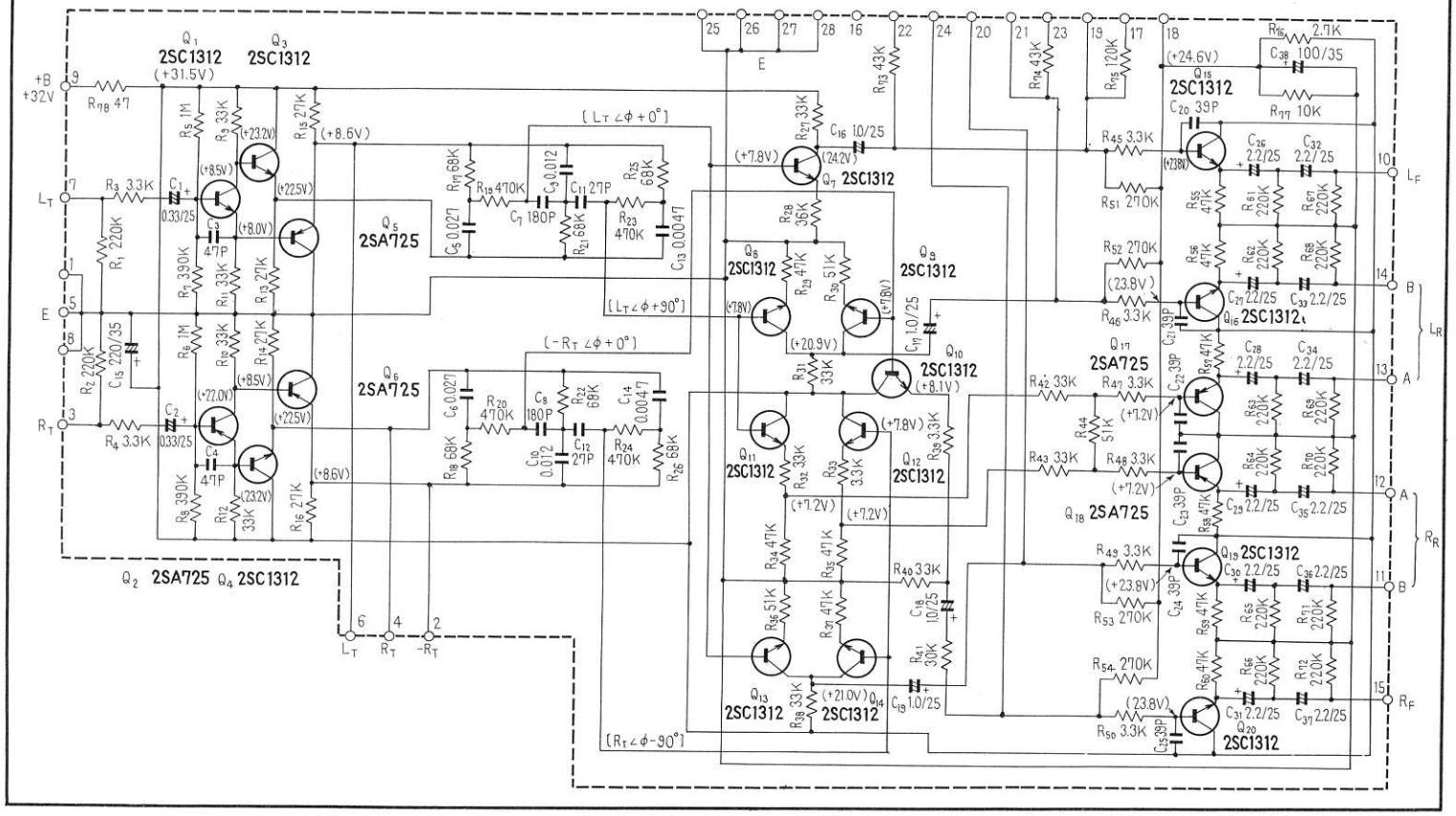

HEAD AMP UNIT

AWF-002

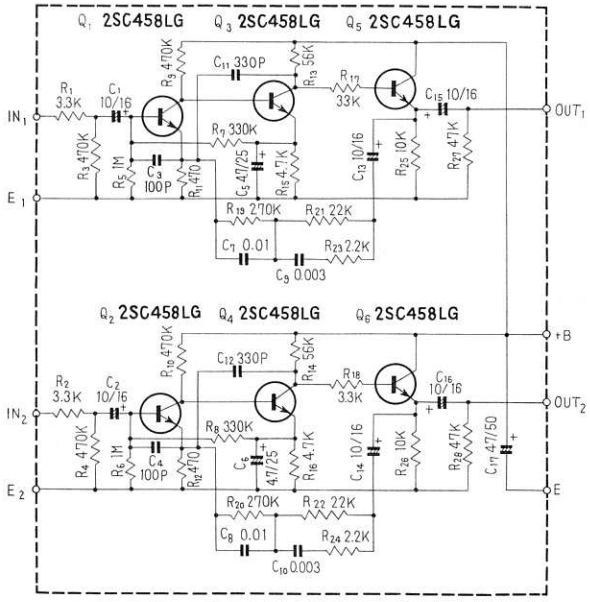

CONTROL AMP UNIT

AWG-002

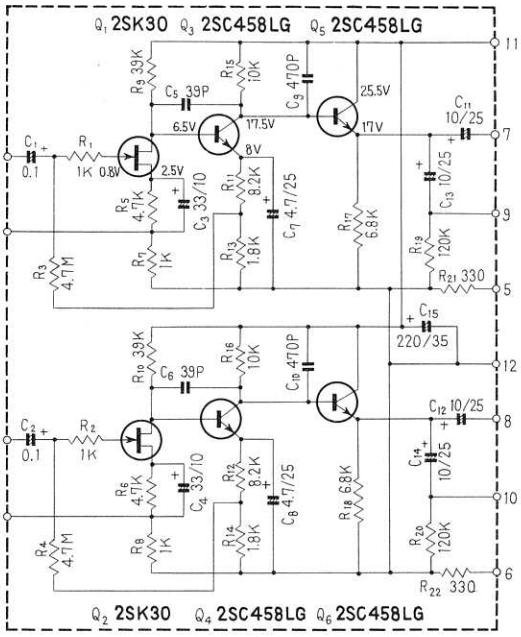

LOGIC UNIT

AWM-032

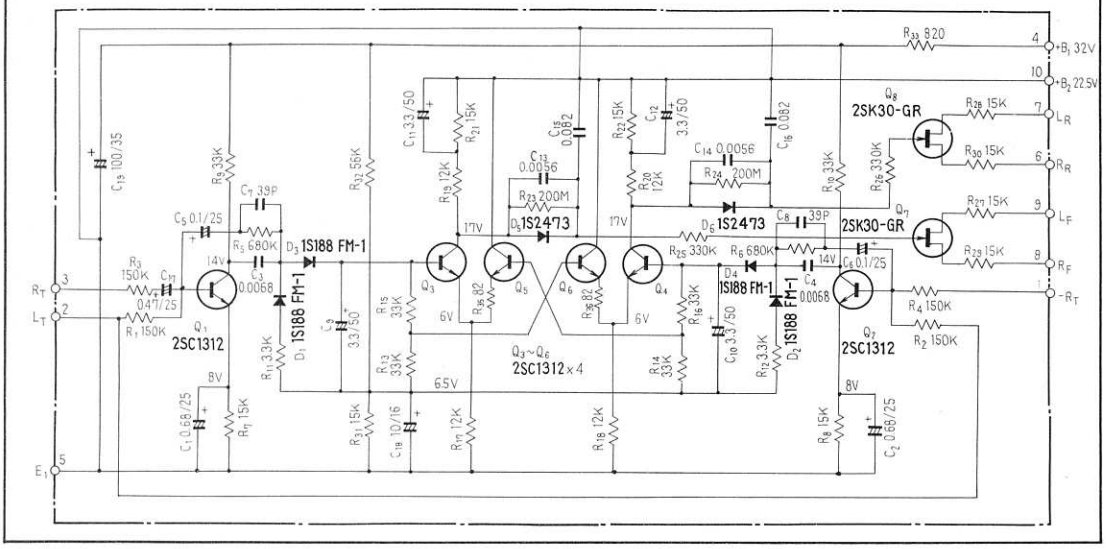

SWITCH UNIT

AWS-001

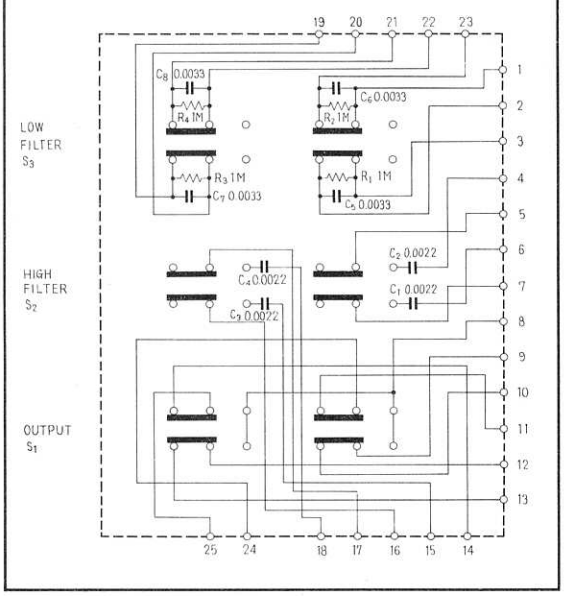

SWITCH UNIT

AWS-002

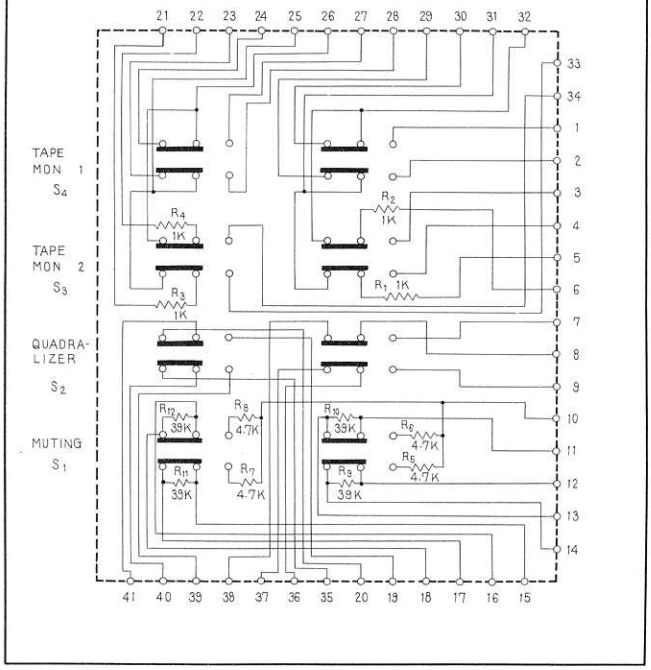

HEADPHONE AMP UNIT

AWK-016

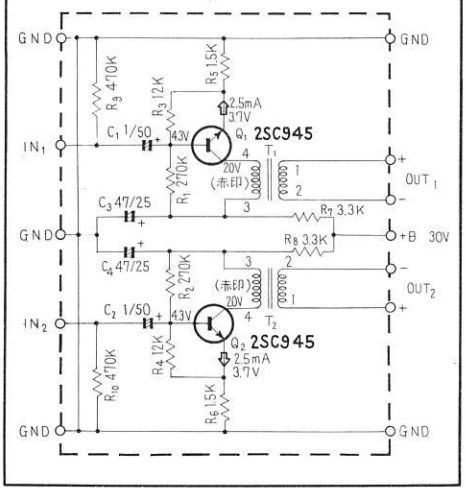

POWER SUPPLY UNIT
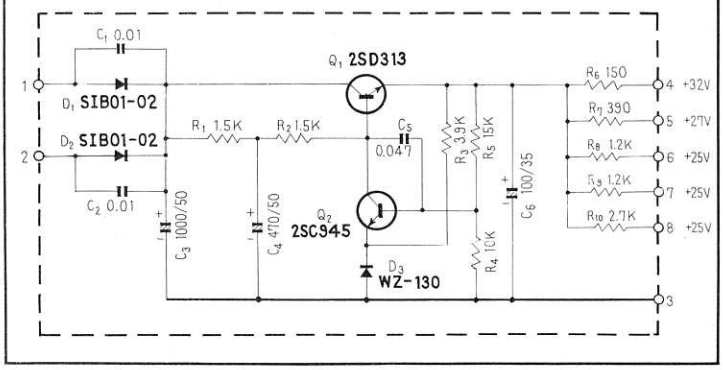
AWR-019