PIONEER®

SERVICE INFORMATION

No. SI-A35014
Date: November, 1984

MODEL: SA-1050 & 1040

SUJECT: Change of transistors in AF Ass'y (GWK-228)

REASON: Convenience on procurement

Q531, Q532	2SA1294	⇨	2SA1294Z
Q525, Q526	2SC3263		2SC3263Z

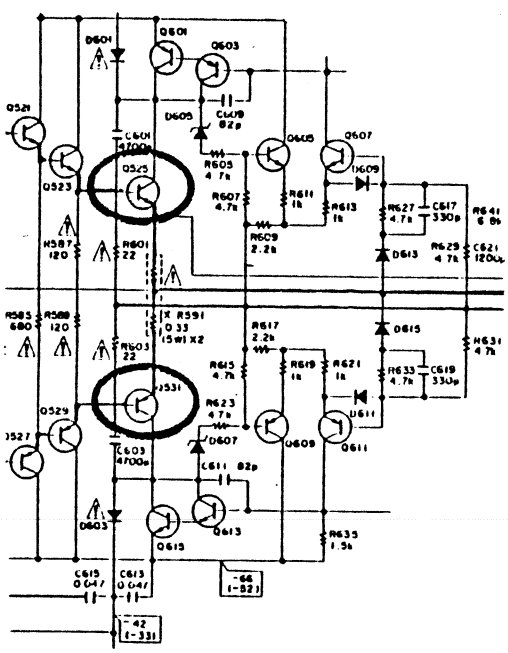

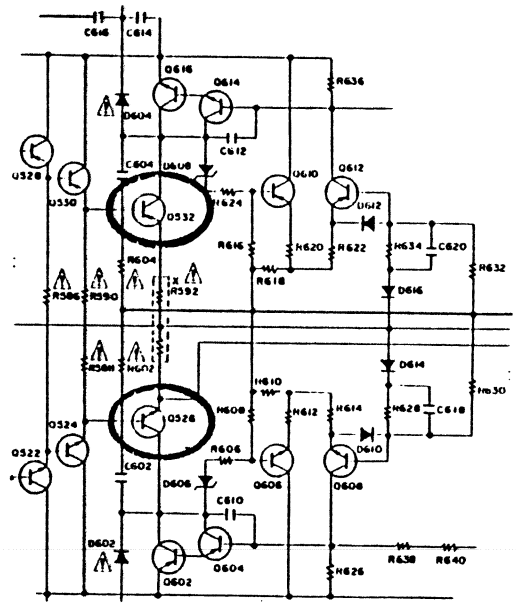

SERVICE MANUAL: ARP-296 --- P. 17

APPLICABLE SER. NO.:

SA-1050/KU	From 3624001	SA-1040/S	From 2602501
SA-1050/S	2600801	SA-1040/KU	3619101
SA-1050/YPO	5500201	SA-1040/YPO	5500201
SA-1050/S/G	2902001	SA-1040/S/G	2903901
SA-1050/KC	3400001		

POST OFFICE BOX 1760
LONG BEACH, CALIFORNIA 90801-1760
PHONE 213/420-5700 FAX (213)420-5902

(J-W-C)

PIONEER ELECTRONICS (USA) INC.
TECHNICAL INFORMATION CENTER