STEREO AMPLIFIER Model SA-400

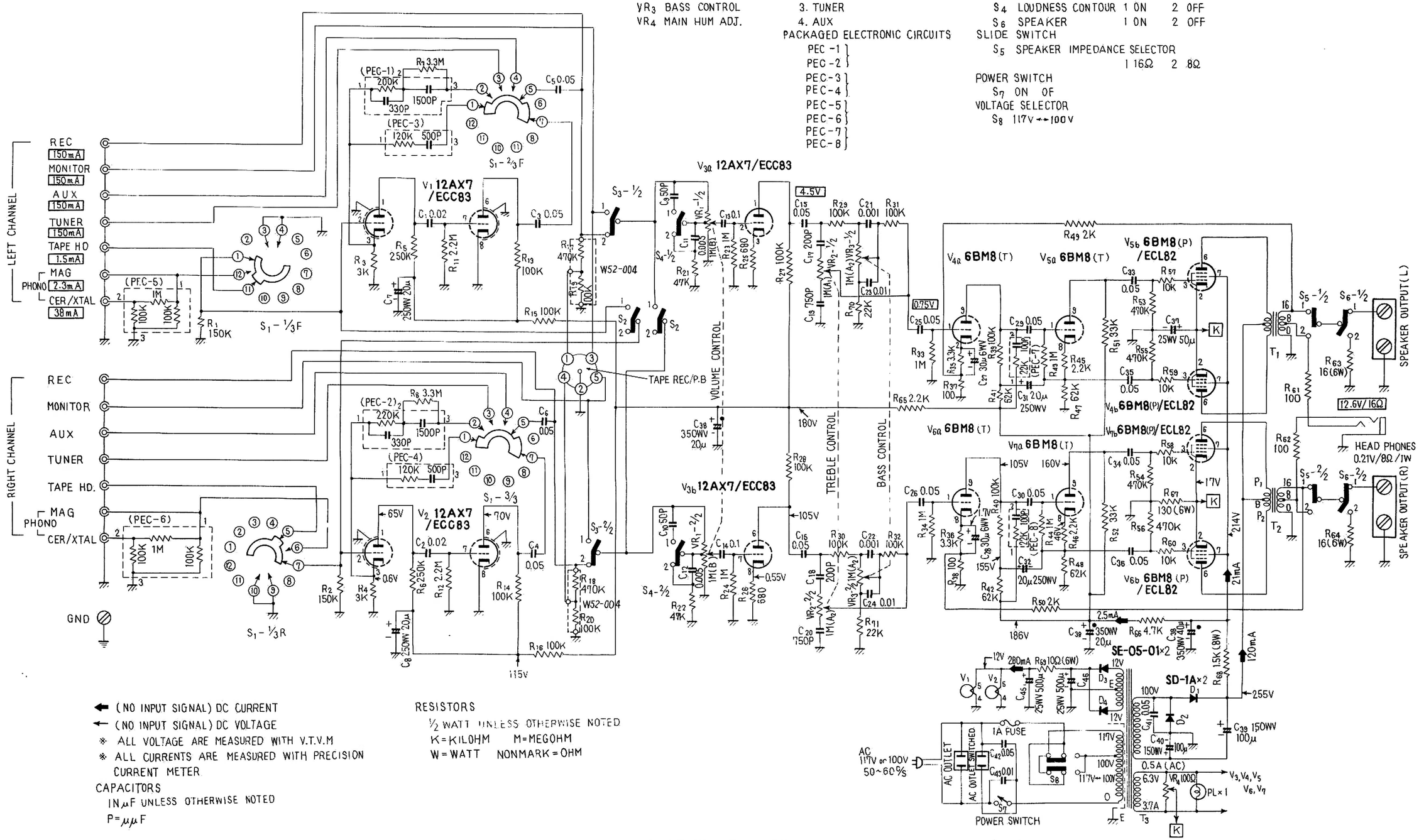

POTENTIOMETERS
- VR_1 VOLUME CONTROL
- VR_2 TREBLE CONTROL
- VR_3 BASS CONTROL
- VR_4 MAIN HUM ADJ.

S_1 INPUT SELECTOR
1. TAPE HD.
2. PHONO
3. TUNER
4. AUX

PACKAGED ELECTRONIC CIRCUITS
- PEC-1, PEC-2
- PEC-3, PEC-4
- PEC-5, PEC-6
- PEC-7, PEC-8

TOGGLE SWITCHES

S_2	MODE SELECTOR	1 MONO	2 STEREO
S_3	TAPE MONITOR	1 ON	2 OFF
S_4	LOUDNESS CONTOUR	1 ON	2 OFF
S_6	SPEAKER	1 ON	2 OFF

SLIDE SWITCH
S_5 SPEAKER IMPEDANCE SELECTOR 1 16Ω 2 8Ω

POWER SWITCH
S_7 ON OF

VOLTAGE SELECTOR
S_8 117V ↔ 100V

- ⬅ (NO INPUT SIGNAL) DC CURRENT
- ← (NO INPUT SIGNAL) DC VOLTAGE
- ※ ALL VOLTAGE ARE MEASURED WITH V.T.V.M
- ※ ALL CURRENTS ARE MEASURED WITH PRECISION CURRENT METER

CAPACITORS
1N μF UNLESS OTHERWISE NOTED
P = μμF

RESISTORS
½ WATT UNLESS OTHERWISE NOTED
K = KILOHM M = MEGOHM
W = WATT NONMARK = OHM

ITEM NO.	VACANT
R_1 ~ R_{71}	R_9, R_{10}
C_1 ~ C_{46}	C_{47}