# SPECIFICATIONS

## Semiconductors

ICs . . . . . 3
FETs . . . . . 2
Transistors . . . . . 41
Diodes . . . . . 31

## Amplifier Section

**Continuous Power Output of 65 watts* per channel, min., at 8 ohms from 20 Hertz to 20,000 Hertz with no more than 0.02 % total harmonic distortion or 65 watts per channel at 4 ohms from 20 Hertz to 20,000 Hertz with no more than 0.03% total harmonic distortion.**

Continuous Power Output at 1kHz (both channels driven)
T.H.D. 0.02%, 8 ohms . . . . . 70 watts per channel
Total Harmonic Distortion (20 Hertz to 20,000Hertz, 8 ohms, from AUX)
continuous rated power output . . No more than 0.02%
32.5 watts per channel power output . . . . . No more than 0.02%
1 watt per channel power output . No more than 0.02%
Intermodulation Distortion (50 Hertz: 7,000 Hertz = 4:1, 8 ohms, from AUX)
continuous rated power output . . No more than 0.02%
32.5 watts per channel power output . . . . . No more than 0.02%
1 watt per channel power output . No more than 0.02%
Damping Factor
(20 Hertz to 20,000 Hertz, 8 ohms) . . . . . 35
Input (Sensitivity/Impedance)
PHONO . . . . . 2.5mV/50kilohms
TUNER . . . . . 150mV/50kilohms
AUX . . . . . 150mV/50kilohms
TAPE PLAY 1, 2 . . . . . 150mV/50kilohms
TAPE PLAY 2 (DIN connector) . . . 150mV/50kilohms
Phono Overload Level (T.H.D. 0.01%, 1kHz)
PHONO . . . . . 200mV
Output (Level/Impedance)
TAPE REC 1 . . . . . 150mV/1kilohm
TAPE REC 2 . . . . . 150mV/1kilohm
TAPE REC 2 (DIN connector) . . . . 30mV/80kilohms
Speaker . . . . . A, B, A+B (4 – 16ohms)
Frequency Response
PHONO (RIAA Equalization)
. . . . . 20Hz to 20,000Hz ±0.2dB
TUNER, AUX, TAPE PLAY
. . . . . 10Hz to 50,000Hz ±1dB
Tone Control
BASS . . . . . +7.5dB, –7.5dB (100Hz)
TREBLE . . . . . +7.5dB, –7.5dB (10,000Hz)
Subsonic Filter . . . . . 15Hz (–6dB/oct)
Loudness Contour (Volume control set at –40dB position) . . . . . +6dB (100Hz), +3dB (10,000Hz)
Hum and Noise (IHF, short-circuited, A network)
PHONO . . . . . 86dB
TUNER, AUX, TAPE PLAY . . . . . 100dB
Hum and Noise (DIN continuous power/50mW)
PHONO . . . . . 70dB/60dB
TUNER, AUX, TAPE PLAY . . . . . 86dB/61dB
Muting . . . . . –20dB

## Miscellaneous

Power Requirements
HA model . . . . . 220V, 50/60Hz
HR model . . . . . 240V, 50/60Hz
S, S/G models . . . . 110V/120V/220V/240V, 50/60Hz
Power Consumption
HA, HR models . . . . . 600W
S, S/G models . . . . . 190W
Dimensions . . . . . 420(W) x 150(H) x 337(D) mm
16-9/16(W) x 5-7/8(H) x 13-1/4(D) in
Weight (without package) . . . . . 9.7kg (21 lb. 6 oz)

## Furnished Parts

Operating instructions . . . . . 1
Fuse 2.5A (S, S/G models only) . . . . . 1
Fuse 5A (S, S/G models only) . . . . . 1

*NOTE:*
*Specifications and the design subject to possible modifications without notice due to improvements.*

* *Measured pursuant to the Federanl Trade Commision's Trade Regulation rule on Power Output Claims for Amplifiers.*

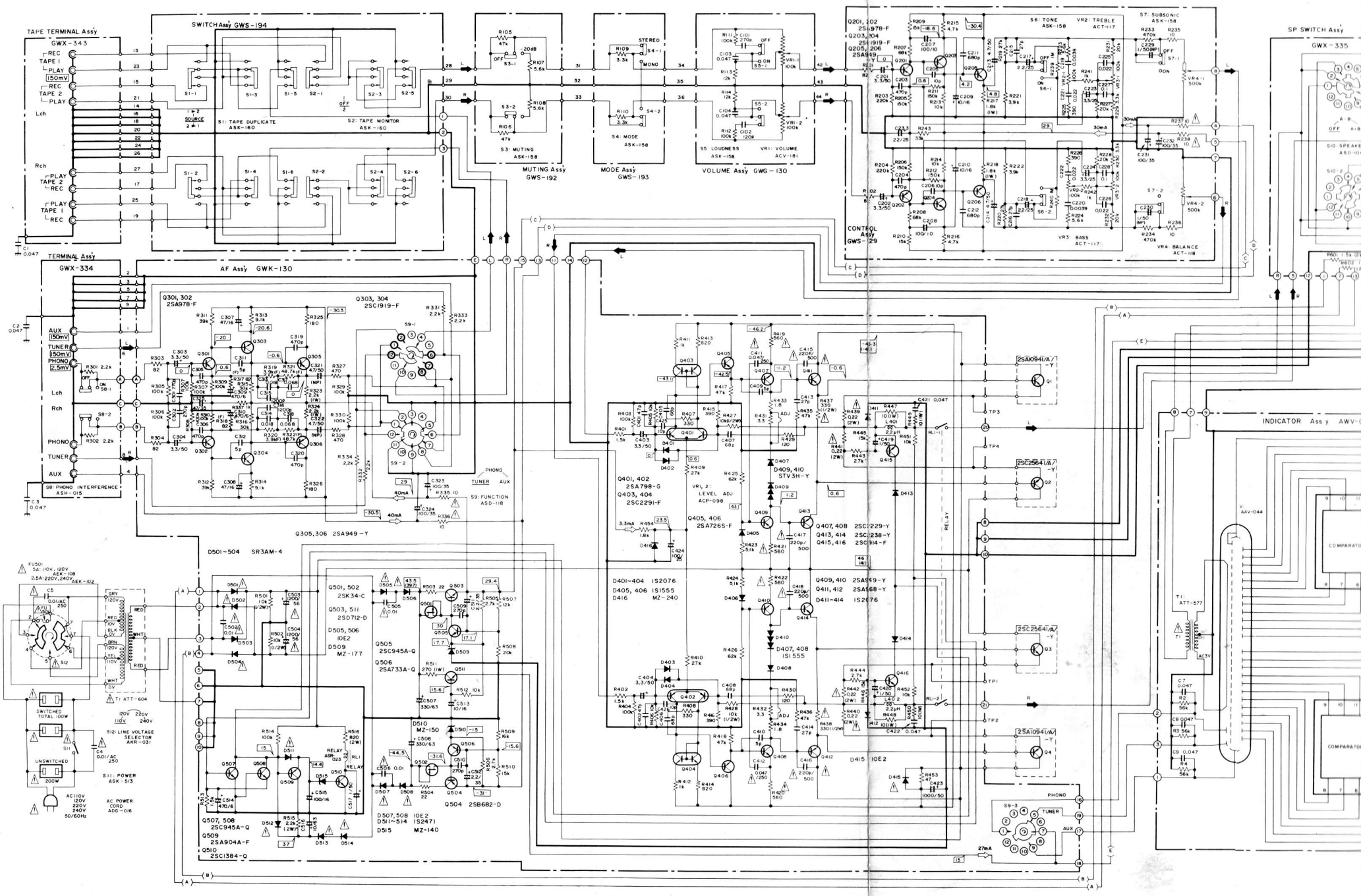
TAPE TERMINAL Assy
GWX-343
SWITCH Assy GWS-194
S1: TAPE DUPLICATE ASK-160
S2: TAPE MONITOR ASK-160
MUTING Assy GWS-192
S3: MUTING ASK-158
MODE Assy GWS-193
S4: MODE ASK-158
VOLUME Assy GWG-130
S5: LOUDNESS ASK-158
VR1: VOLUME ACV-181
CONTROL Assy GWS-29
S6: TONE ASK-158
VR2: TREBLE ACT-117
S7: SUBSONIC ASK-158
VR3: BASS ACT-117
VR4: BALANCE ACT-118
SP SWITCH Assy
GWX-335
TERMINAL Assy
GWX-334
AF Assy GWK-130
S8: PHONO INTERFERENCE ASH-015
S9: FUNCTION ASD-118
Q301, 302 2SA978-F
Q303, 304 2SC1919-F
Q305,306 2SA949-Y
Q401, 402 2SA798-G
Q403, 404 2SC2291-F
Q405, 406 2SA726S-F
Q407, 408 2SC1229-Y
Q409, 410 2SA949-Y
Q501, 502 2SK34-C
Q503, 511 2SD712-D
Q505 2SC945A-Q
Q506 2SA733A-Q
Q504 2SB682-D
Q507, 508 2SC945A-Q
Q509 2SA904A-F
Q510 2SC1384-Q
D501~504 SR3AM-4
D401~404 1S2076
D405, 406 1S1555
D416 MZ-240
D409, 410 STV3H-Y
D407, 408 1S1555
D415 1OE2
D507,508 1OE2
D511~514 1S2471
D515 MZ-140
D510 MZ-150
D505, 506 1OE2
D509 MZ-177
VR1, 2: LEVEL ADJ ACP-098
INDICATOR Assy AWV-044
T1: ATT-577
T1: ATT-604
S11: POWER ASK-513
S12: LINE VOLTAGE SELECTOR AKR-031
AC POWER CORD ADG-016
SWITCHED TOTAL 100W
UNSWITCHED 200W
AC110V 120V 220V 240V 50/60Hz
RELAY

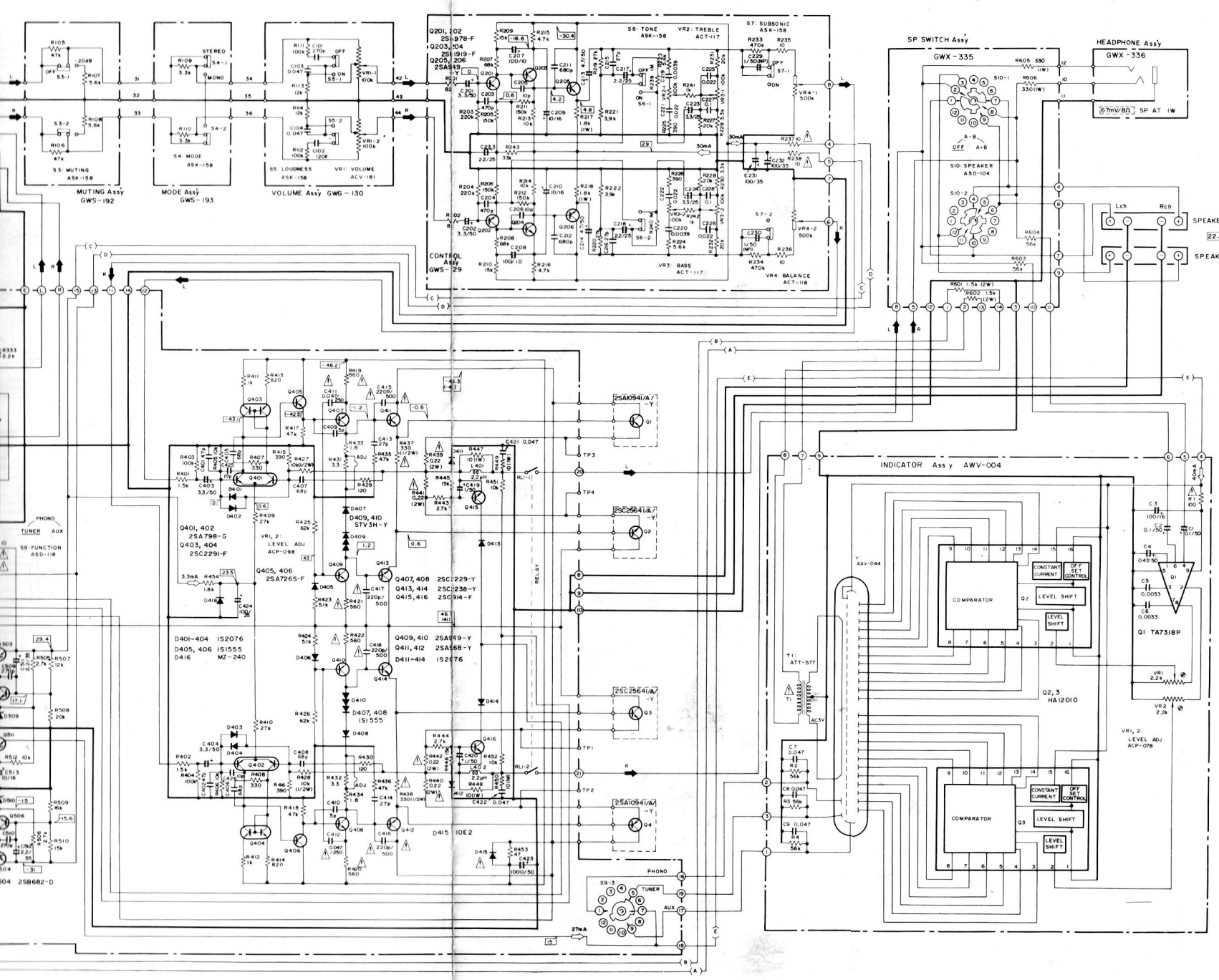


1. RESISTORS;
   Indicated in Ω, 1/4W, ±5% tolerance unless otherwise noted
   k;kΩ, M;MΩ, (F);±1%, (G);±2%, (K);±10% tolerance
2. CAPACITORS;
   Indicated in capacity(μF)/voltage(V) unless otherwise noted p;pF
   Indication without voltage is 50V except electrolytic capacitor.
3. VOLTAGE, CURRENT;
   [V] ; Signal voltage at 65W + 65W 8Ω output(1kHz)
   [ ] ; DC voltage(V) at no input signal
   Value in ( ) is DC voltage at rated power.
   ⇦mA ; DC current at no input signal
4. OTHERS;
   ➡ ; Signal route
   ⊘ ; Adjusting point

The ⚠ mark found on some component parts indicates the importance of the safety factor of the part. Therefore, when replacing, be sure to use parts of identical designation.

This is the basic schematic diagram, but the actual circuit may vary due to improvements in design.

SWITCHES

| | | |
|---|---|---|
| S1 | TAPE DUPLICATE | 1▸2-SOURCE-2▸1 |
| S2 | TAPE MONITOR | 1-OFF-2 |
| S3 | MUTING | OFF- -20dB |
| S4 | MODE | STEREO-MONO |
| S5 | LOUDNESS | OFF-ON |
| S6 | TONE | OFF-ON |
| S7 | SUBSONIC | OFF-ON |
| S8 | PHONO INTERFERENCE | OFF-ON |
| S9 | FUNCTION | TUNER-PHONO-AUX |
| S10 | SPEAKERS | OFF-A-B-A+B |
| S11 | POWER | OFF-ON |
| S12 | LINE VOLTAGE SELECTOR | 110V-120V-220V-240V |

The underlined indicates the switch position.

# SCHEMATIC DIAGRAM

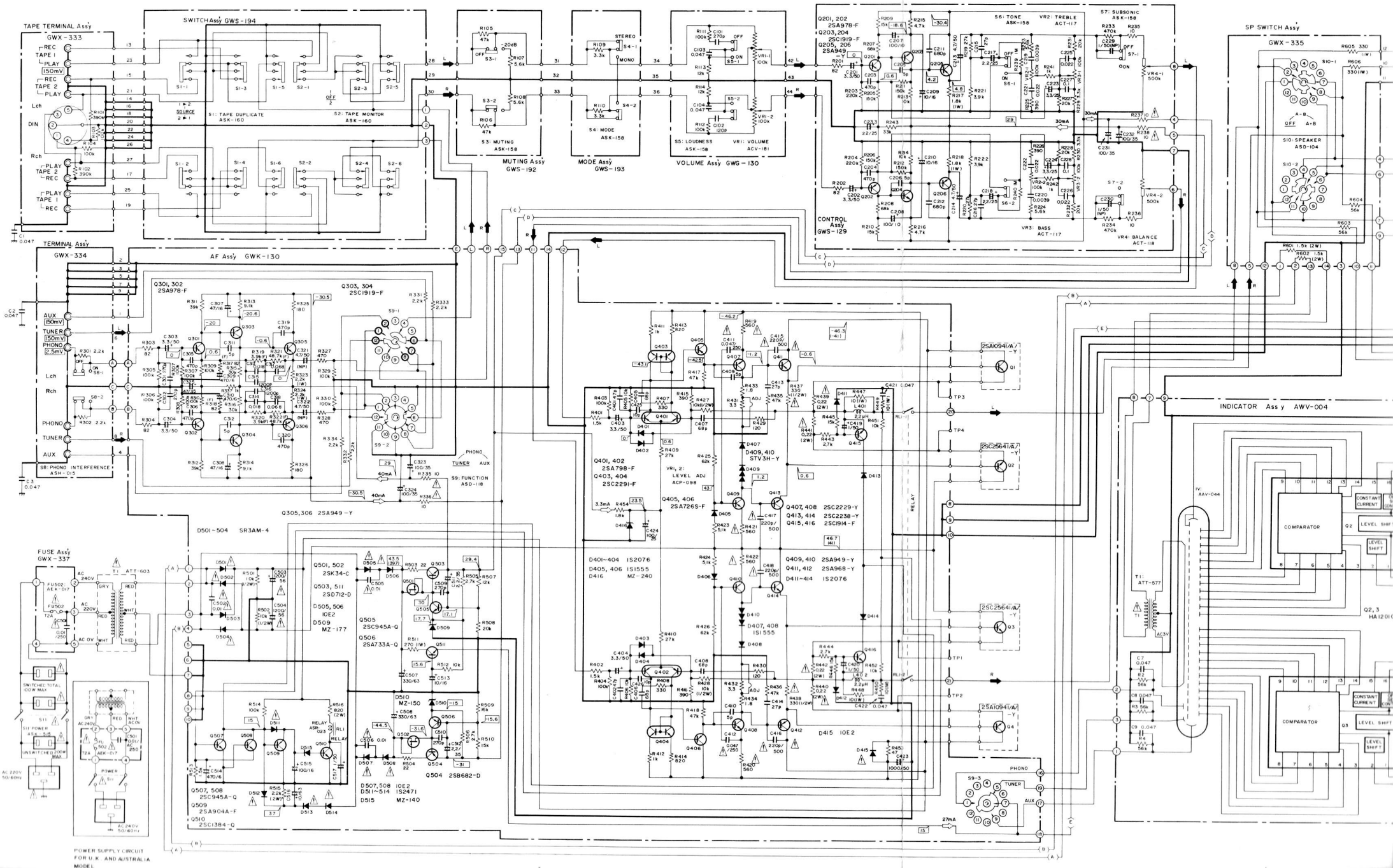

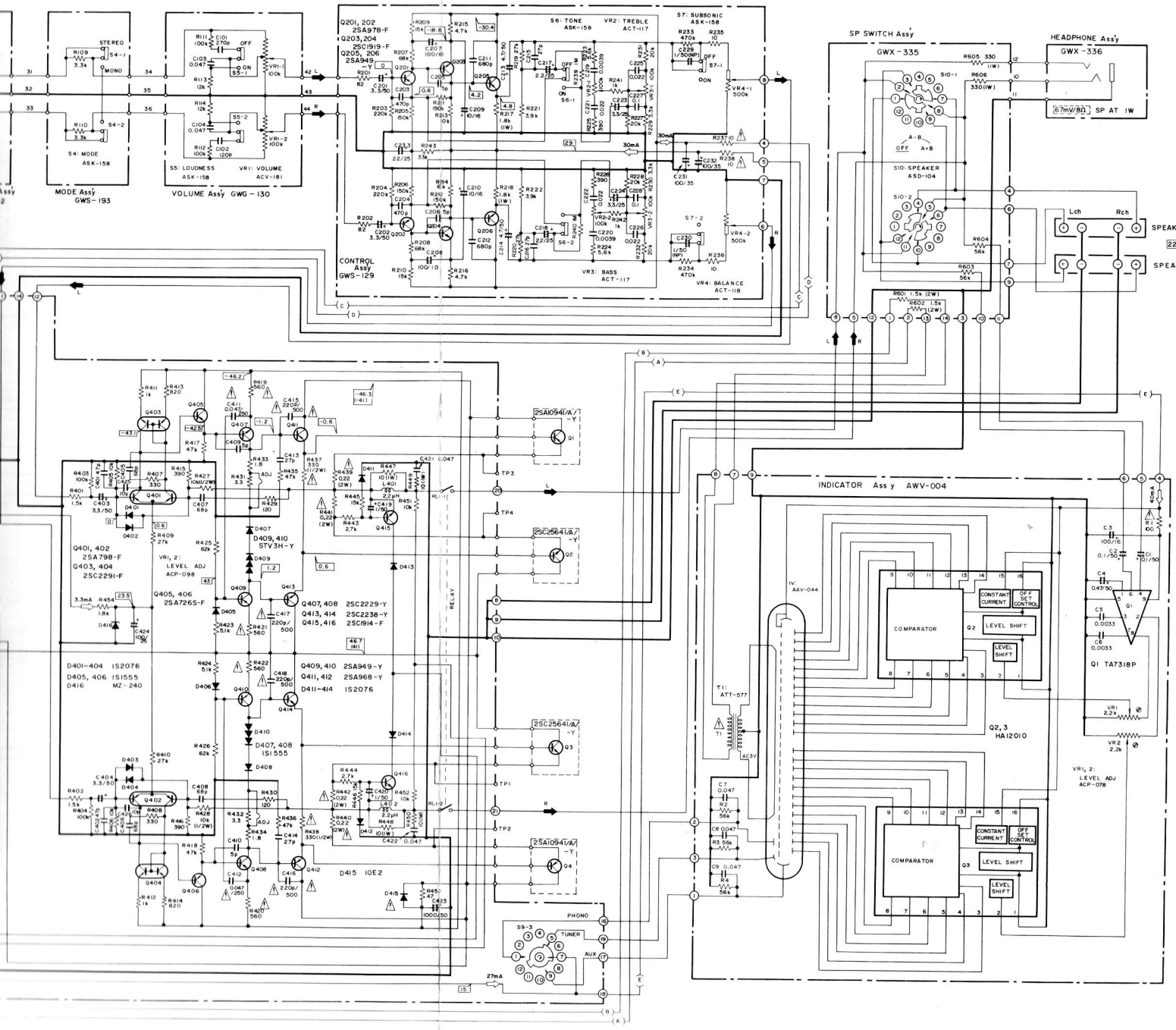


1. RESISTORS;
   Indicated in Ω, 1/4W, ±5% tolerance unless otherwise noted
   k;kΩ, M;MΩ, (F);±1%, (G);±2%, (K);±10% tolerance
2. CAPACITORS;
   Indicated in capacity(μF)/voltage(V) unless otherwise noted p;pF
   Indication without voltage is 50V except electrolytic capacitor.
3. VOLTAGE, CURRENT;
   V ; Signal voltage at 65W + 65W 8Ω output(1kHz)
   ; DC voltage(V) at no input signal
   Value in ( ) is DC voltage at rated power.
   ⇦ mA ; DC current at no input signal
4. OTHERS;
   ➡ ; Signal route
   ⊘ ; Adjusting point
   The ⚠ mark found on some component parts indicates the importance of the safety factor of the part. Therefore, when replacing, be sure to use parts of identical designation.

This is the basic schematic diagram, but the actual circuit may vary due to improvements in design.

SWITCHES

| | | |
|---|---|---|
| S1 | TAPE DUPLICATE | 1•2-SOURCE-2•1 |
| S2 | TAPE MONITOR | 1-OFF-2 |
| S3 | MUTING | OFF- -20dB |
| S4 | MODE | STEREO-MONO |
| S5 | LOUDNESS | OFF-ON |
| S6 | TONE | OFF-ON |
| S7 | SUBSONIC | OFF-ON |
| S8 | PHONO INTERFERENCE | OFF-ON |
| S9 | FUNCTION | TUNER-PHONO-AUX |
| S10 | SPEAKERS | OFF-A-B-A+B |
| S11 | POWER | OFF-ON |

The underlined indicates the switch position.