SCHEMATIC DIAGRAM

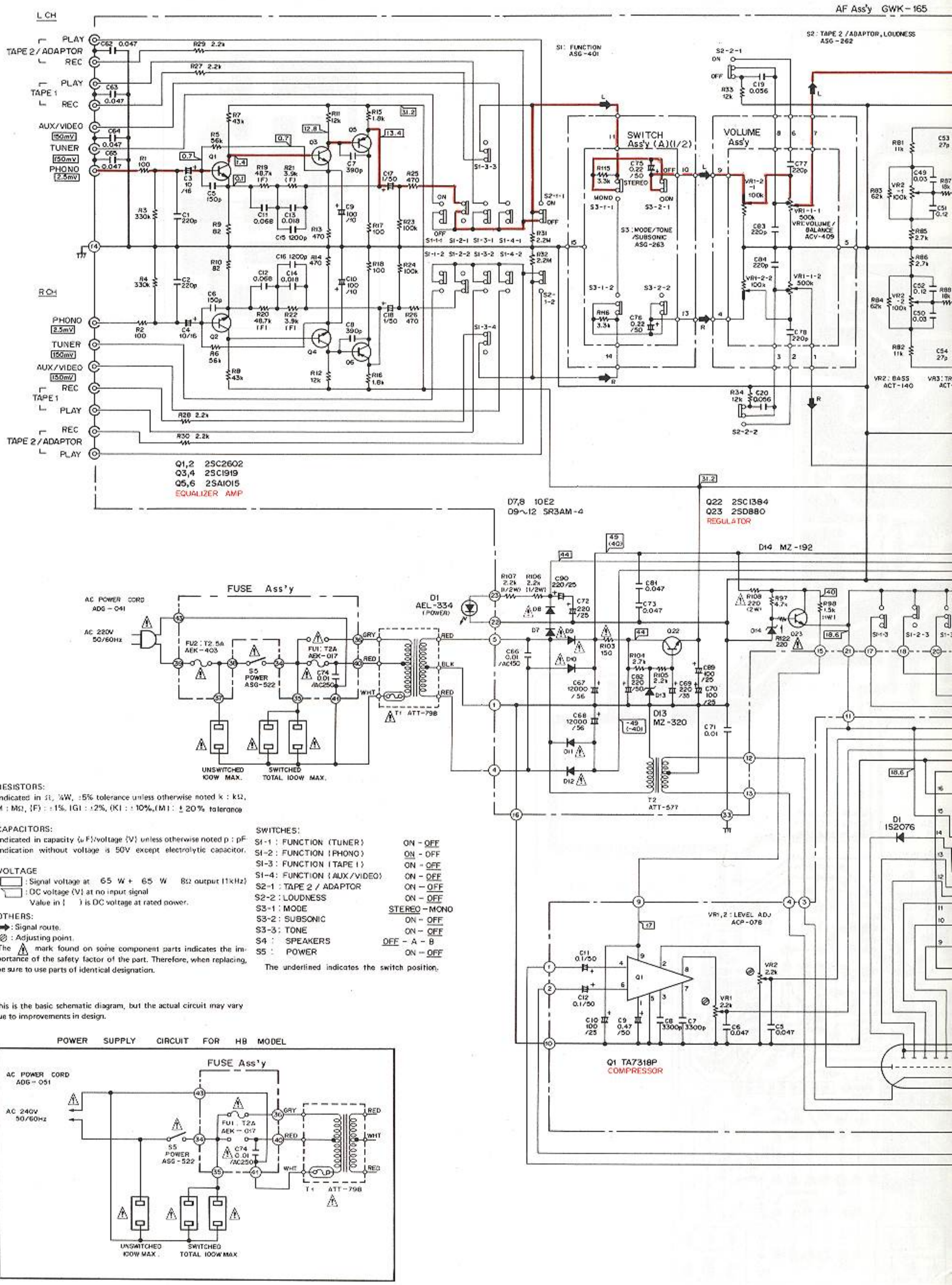

1. RESISTORS:
Indicated in Ω, ¼W, ±5% tolerance unless otherwise noted k : kΩ, M : MΩ, (F) : ±1%, (G) : ±2%, (K) : ±10%, (M) : ±20% tolerance

2. CAPACITORS:
Indicated in capacity (μF)/voltage (V) unless otherwise noted p : pF. Indication without voltage is 50V except electrolytic capacitor.

3. VOLTAGE
: Signal voltage at 65 W + 65 W 8Ω output (1kHz)
: DC voltage (V) at no input signal
Value in ( ) is DC voltage at rated power.

4. OTHERS:
➡ : Signal route.
⊘ : Adjusting point.
The ⚠ mark found on some component parts indicates the importance of the safety factor of the part. Therefore, when replacing, be sure to use parts of identical designation.

SWITCHES:

S1-1 :	FUNCTION (TUNER)	ON - OFF
S1-2 :	FUNCTION (PHONO)	ON - OFF
S1-3 :	FUNCTION (TAPE 1)	ON - OFF
S1-4 :	FUNCTION (AUX/VIDEO)	ON - OFF
S2-1 :	TAPE 2 / ADAPTOR	ON - OFF
S2-2 :	LOUDNESS	ON - OFF
S3-1 :	MODE	STEREO - MONO
S3-2 :	SUBSONIC	ON - OFF
S3-3 :	TONE	ON - OFF
S4 :	SPEAKERS	OFF - A - B
S5 :	POWER	ON - OFF

The underlined indicates the switch position.

This is the basic schematic diagram, but the actual circuit may vary due to improvements in design.

POWER SUPPLY CIRCUIT FOR HB MODEL

NOTE:
The indicated semiconductors are representative ones only. Other alternative semiconductors may be used and are listed in the parts list.

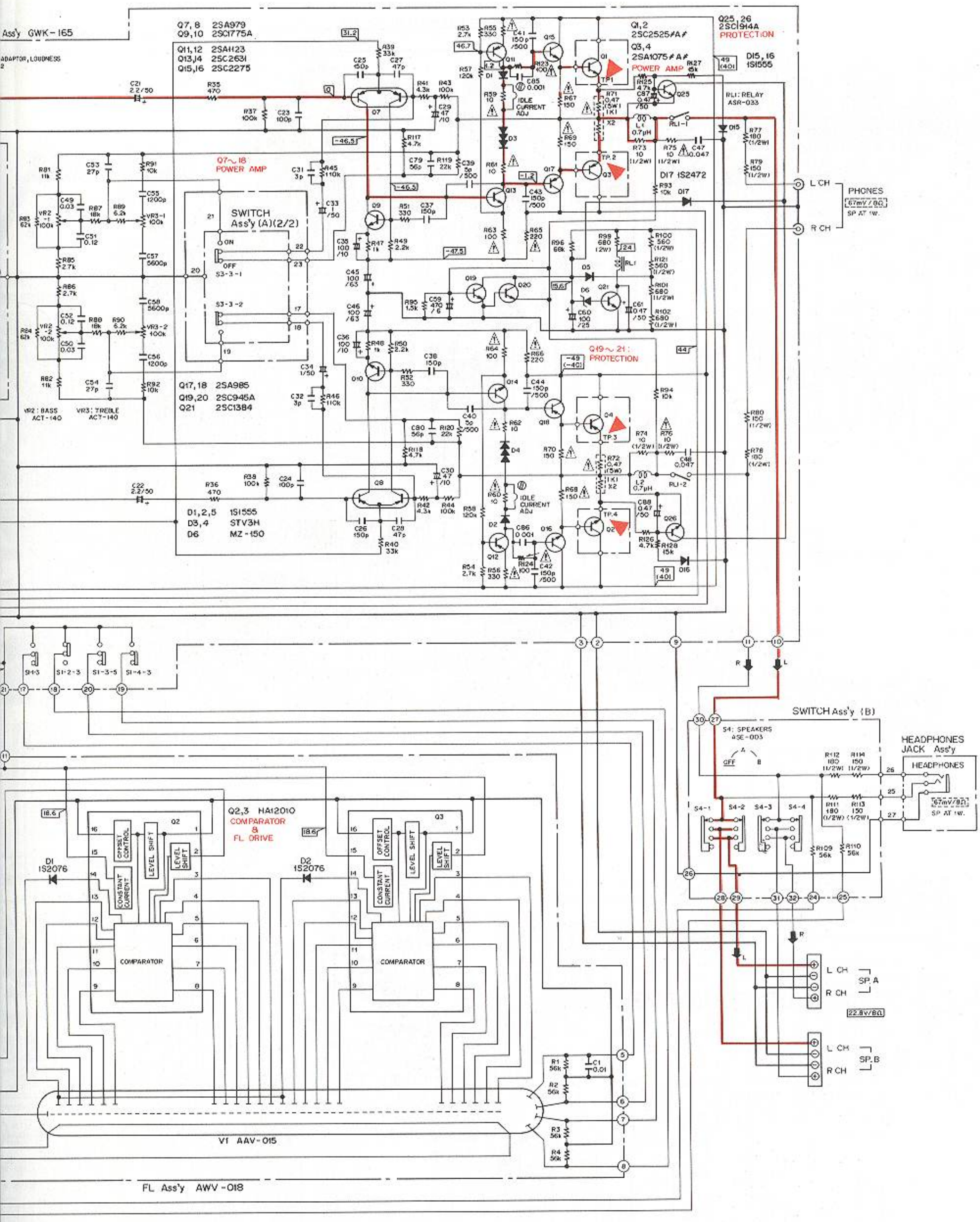

SCHEMATIC DIAGRAM

NOTE:
The indicated semiconductors are representative ones only. Other alternative semiconductors may be used and are listed in the parts list.

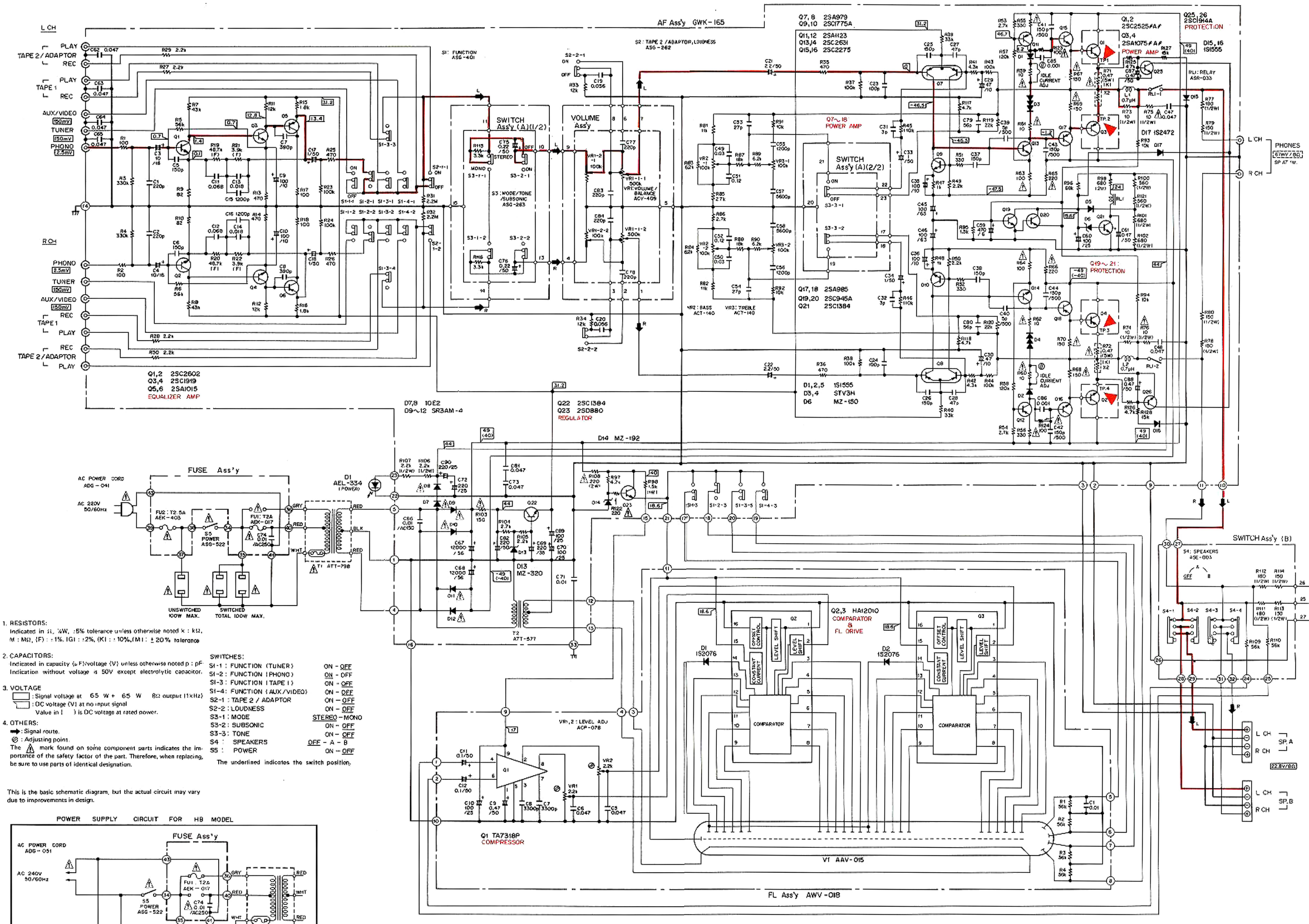

1. RESISTORS:
Indicated in Ω, ¼W, ±5% tolerance unless otherwise noted k : kΩ, M : MΩ, (F) : ±1%, (G) : ±2%, (K) : ±10%, (M) : ±20% tolerance

2. CAPACITORS:
Indicated in capacity (μF)/voltage (V) unless otherwise noted p : pF
Indication without voltage is 50V except electrolytic capacitor.

3. VOLTAGE
: Signal voltage at 65 W + 65 W 8Ω output (1kHz)
: DC voltage (V) at no input signal
Value in ( ) is DC voltage at rated power.

4. OTHERS:
➡ : Signal route.
⊘ : Adjusting point.
The ⚠ mark found on some component parts indicates the importance of the safety factor of the part. Therefore, when replacing, be sure to use parts of identical designation.

SWITCHES:

S1-1 : FUNCTION (TUNER)	ON - OFF
S1-2 : FUNCTION (PHONO)	ON - OFF
S1-3 : FUNCTION (TAPE 1)	ON - OFF
S1-4 : FUNCTION (AUX/VIDEO)	ON - OFF
S2-1 : TAPE 2 / ADAPTOR	ON - OFF
S2-2 : LOUDNESS	ON - OFF
S3-1 : MODE	STEREO - MONO
S3-2 : SUBSONIC	ON - OFF
S3-3 : TONE	ON - OFF
S4 : SPEAKERS	OFF - A - B
S5 : POWER	ON - OFF

The underlined indicates the switch position.

This is the basic schematic diagram, but the actual circuit may vary due to improvements in design.
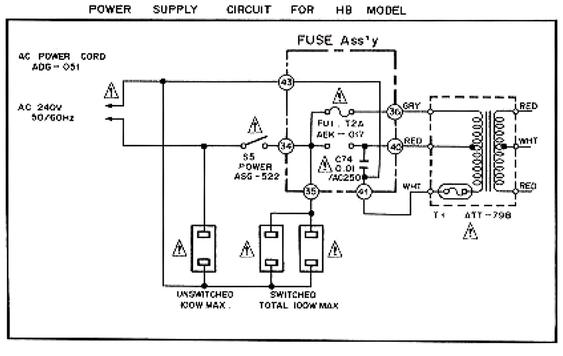
POWER SUPPLY CIRCUIT FOR HB MODEL