PIONEER

Service Manual

CIRCUIT DESCRIPTIONS
REPAIR & ADJUSTMENTS

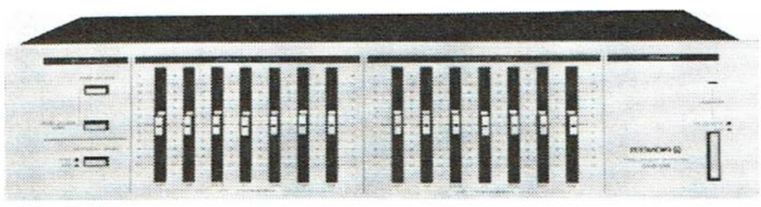

ORDER NO.
ARP-330-0

GRAPHIC EQUALIZER

SG-540

MODEL SG-540 COMES IN SIX VERSIONS DISTINGUISHED AS FOLLOWS:

Type	Voltage	Remarks
KU	AC120V only	U. S. A. model
WE	AC220 – 240V	European continent model
WB	AC220 – 240V	United Kingdom model
WP	AC220 – 240V	Australia model
R	AC110 – 120V, 220 – 240V (switchable)	General export model
R/G	AC110 – 120V, 220 – 240V (switchable)	U. S. Military model

- **This service manual is applicable to the WE type. For servicing of the other types, please refer to the Additional Service Manual.**

CONTENTS

1. FRONT PANEL FACILITIES 2
2. SPECIFICATIONS 3
3. BLOCK DIAGRAM 3
4. CIRCUIT DESCRIPTIONS 4
5. PARTS LOCATION 5
6. PARTS LIST 7
7. P.C.BOARDS CONNECTION DIAGRAM 9
8. SCHEMATIC DIAGRAM 11
9. EXPLODED VIEW 13
10. PACKING 15
11. SAFETY INFORMATION 15

PIONEER ELECTRONIC CORPORATION 4-1, Meguro 1-Chome, Meguro-ku, Tokyo 153, Japan
PIONEER ELECTRONICS [USA] INC. 1925 E. Dominguez St., Long Beach, California 90810 U.S.A.
PIONEER ELECTRONIC [EUROPE] N.V. Luithagen-Haven 9, 2030 Antwerp, Belgium
PIONEER ELECTRONICS AUSTRALIA PTY. LTD. 178-184 Boundary Road, Braeside, Victoria 3195, Australia
1983 **Printed in Japan**

www.hifiengine.com

1. FRONT PANEL FACILITIES

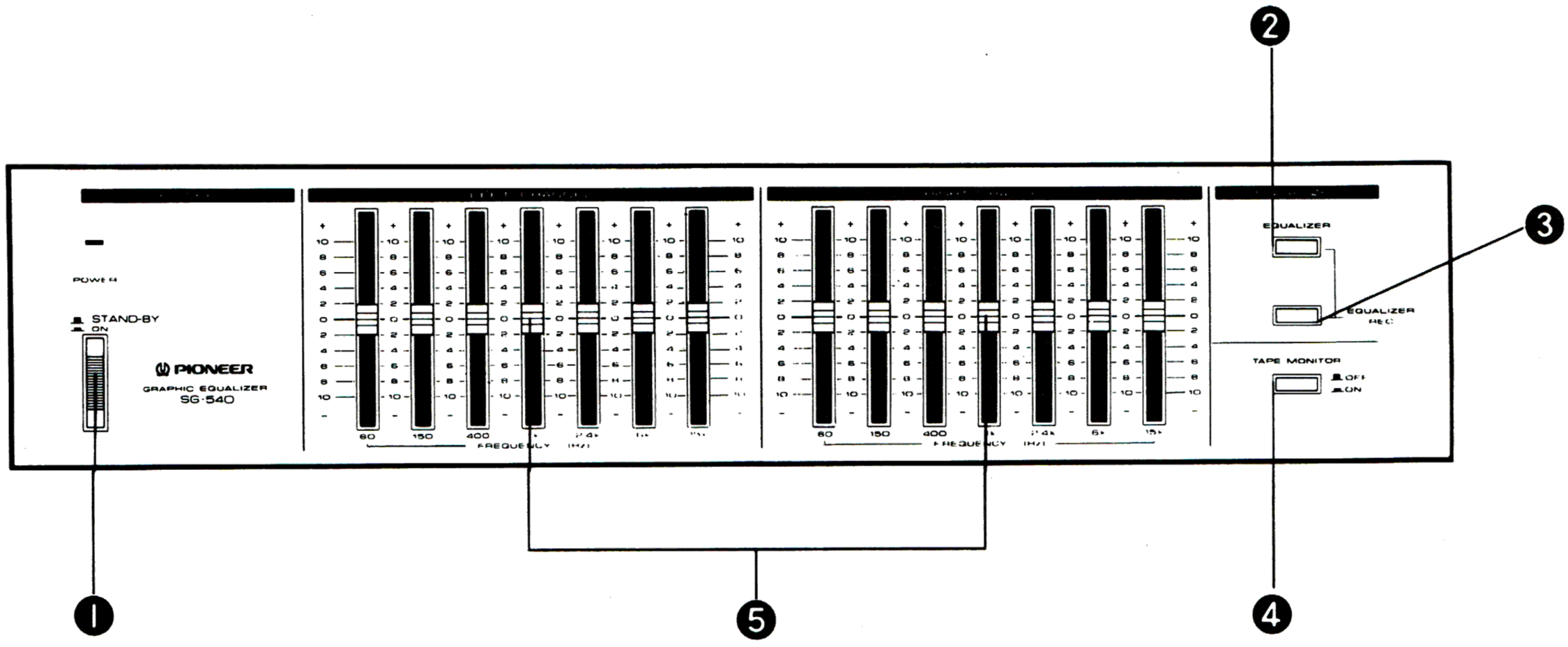

❶ POWER SWITCH (POWER)/INDICATOR

When this switch is set to the ON position, power is supplied to the unit's main circuits and the indicator lights. The unit's power switch is geared to selecting the transformer's secondary and so even at the STAND-BY position, the unit's circuitry will work as long as the power cord is connected to the power outlet.
Disconnect the power cord from the power outlet when you do not plan to use the unit for a long period of time.

❷ EQUALIZER SWITCH

This switch is pressed to compensate for the frequency response of the signals entering the EQUALIZER INPUT terminals. The compensated signals are then output as the output signals from the EQUALIZER OUTPUT terminals.

❸ EQUALIZER RECORD SWITCH

Press this switch to record the signals which have been compensated for by the SG-540. The compensated signals are output from both the EQUALIZER OUTPUT terminals and ADAPTOR/TAPE REC terminals.

❹ TAPE MONITOR SWITCH

Press this switch when using a stereo component connected to the rear panel ADAPTOR/TAPE terminals. At all other times, ensure that the switch is at the released position.

❺ OCTAVE CONTROLS

Move these controls above or below the center (zero) position to boost or attenuate the corresponding frequency band. The seven frequency bands are centered at 60 Hz, 150 Hz, 400 Hz, 1 kHz, 2.4 kHz, 6 kHz and 15 kHz.
The indicator of each control serves as a guideline for the changes in the frequency response. It lights when the EQUALIZER switch is pressed.

www.hifiengine.com

2. SPECIFICATIONS

Graphic Equalizer Section

Equalizer Range
- Individual channel controls ..... ±10 dB
- Center frequencies
  ..... 60 Hz, 150 Hz, 400 Hz, 1 kHz, 2.4 kHz, 6 kHz, 15 kHz

Total Harmonic Distortion
- (1kHz, all controls at flat position, 1 V output) 0.005%

Gain (all controls at flat position) ..... 0 dB

Maximum Output Voltage
- 1 kHz, 0.01% THD, 50 kΩ RL ..... 6 V

Frequency Response ..... 5 Hz - 70 kHz $^{+0}_{-1}$ dB

Signal-to-Noise Ratio
- (IHF A network, short-circuited, 1 V output) ..... 100 dB

Input Impedance ..... 50 kΩ

Output Impedance ..... 600 Ω

Power Supply Section/Miscellaneous

Power Requirements .....a.c. 220~240 V, 50/60 Hz

Power Consumption 10W

Dimensions .....420(W) x 97(H) x 216(D) mm
16-9/16(W) x 3-13/16(H) x 8-1/2(D) in.

Weight ..... 2.8kg(6 lb 3 oz)

Furnished Parts

Connection cord with pin plugs 2

Operating Instructions 1

NOTE:
Specifications and design subject to possible modification without notice due to improvements.

3. BLOCK DIAGRAM

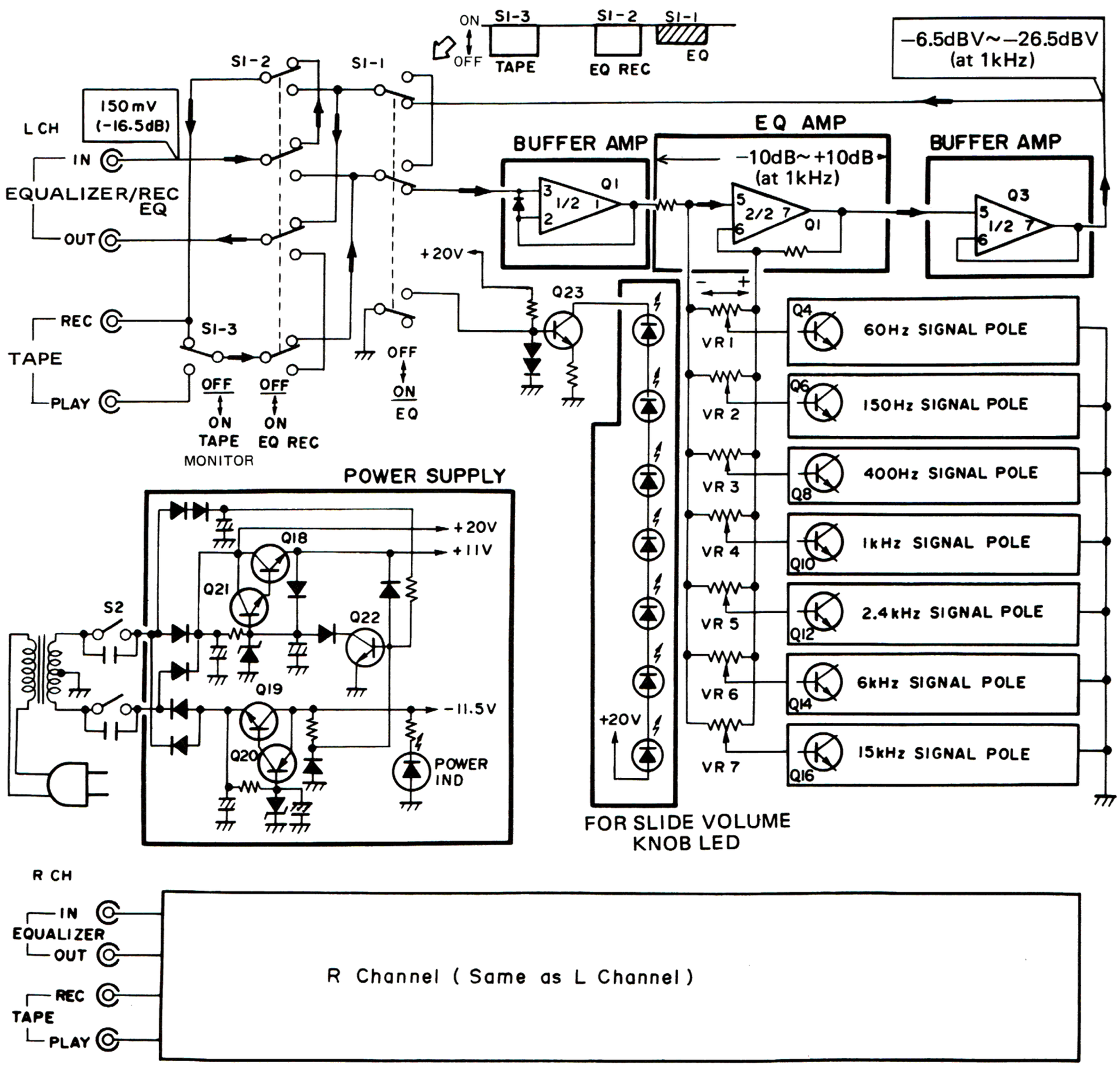

NOTE:
Push-button switches S1-1, S1-2 and S1-3 are locked independently.

www.hifiengine.com

4. CIRCUIT DESCRIPTIONS

GRAPHIC EQUALIZER SECTION

A graphic equalizer is a device which divides the audio frequency band into several segments called octaves so that the level of each individual octave can be increased or reduced. The SG-540 divides reproduced frequencies into 7 octaves with center frequencies of 60 Hz, 150 Hz, 400 Hz, 1 kHz, 2.4 kHz, 6 kHz and 15 kHz. The level of each octave can be varied throughout a range of ±10 dB, and the left channel and the right channel can be adjusted independently.

Further, when the equalizer switch (EQ SW) is ON, the LEDs built into the level controls (sliding variable resistor knobs) light to allow the frequency response of each octave to be determined visually. The equalizer element is an LC series resonance circuit in which the active element is an inductor equivalent. This resonance circuit is connected to the variable resistor linking the positive and negative input terminals. (See Figure 4-1.)

This causes the impedance of the resonance circuit and the resistance of the variable resistor to act as constants for the input circuit and the feedback circuit. Further, buffer amplifiers are located before and after the EQ AMP so that the frequency response of the equalizer element are not affected by the impedance of audio equipment connected to the SG-540.

Figure 4-1 shows the equivalent circuit for the graphic equalizer section. In the area surrounded by the dotted line, the circuit on the Q1 side of point A is equivalent to an inductance and a resistance connected in series. Any required resonant frequency can be obtained by changing the inductance and capacitance of the series resonance circuit by varying C_1, C_2, R_3 and R_4. With the SG-540, 7 equalizer elements with different resonance frequencies are included in one EQ AMP, and each frequency segment can be adjusted independently. The frequency response of each octave is boosted when the slider of the variable resistor is moved toward the minus input side (the feedback input side) of EQ AMP IC1; conversely, it is reduced when the slider is moved to the plus side.

POWER SUPPLY CIRCUIT

As is shown in Figure 4-2, two voltages(+11 V and -11.5 V) are supplied by the regulated power supply of the graphic equalizer section. The LED set in the knob of each sliding resistor is supplied with stable current by Q23, so the light emitted by the LED is steady. Further, the load on Q18 and Q21 is light because the LED current is obtained after full wave rectification. Q23 goes ON when the EQ switch is turned ON to release GND on the base side, and the LED lights when Q23 goes ON.

SWITCH SECTION

- **TAPE MONITOR switch (S1-3)**

This switch selects between a program source or a tape playback (or REC monitor) signal.

- **EQ REC switch (S1-2)**

Turning this switch on causes an equalized program source signal to be output to the REC terminals.

- **EQUALIZER switch (S1-1)**

This switch determines whether or not a signal is to be equalized; when this switch is OFF, the equalizing circuit is by-passed and the input signal is connected directly to the output terminals.

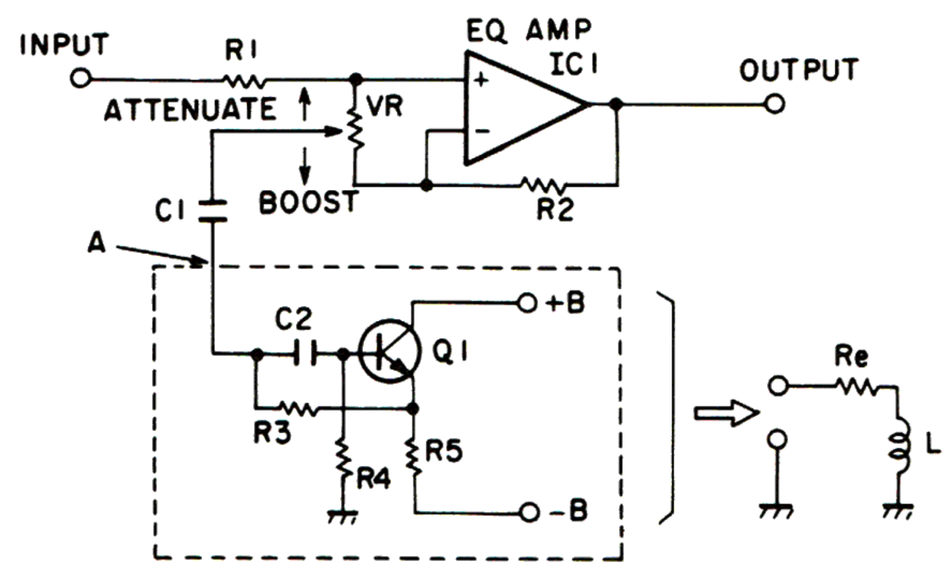

Fig. 4-1 Graphic equalizer

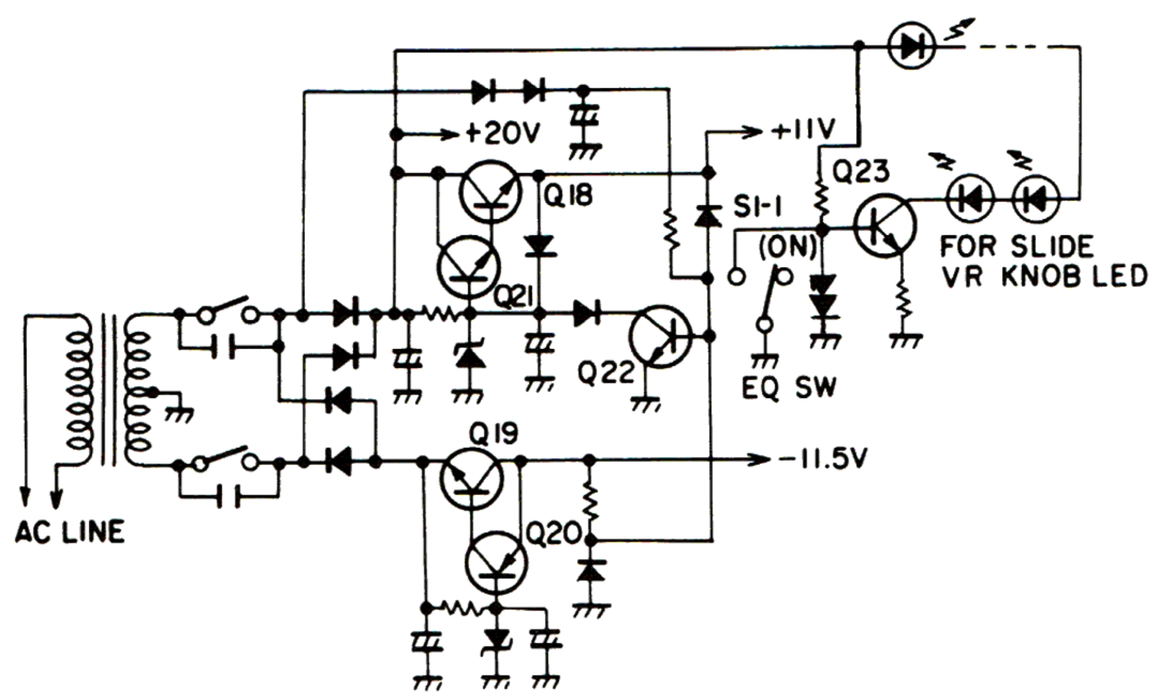

Fig. 4-2 Power supply circuit

www.hifiengine.com

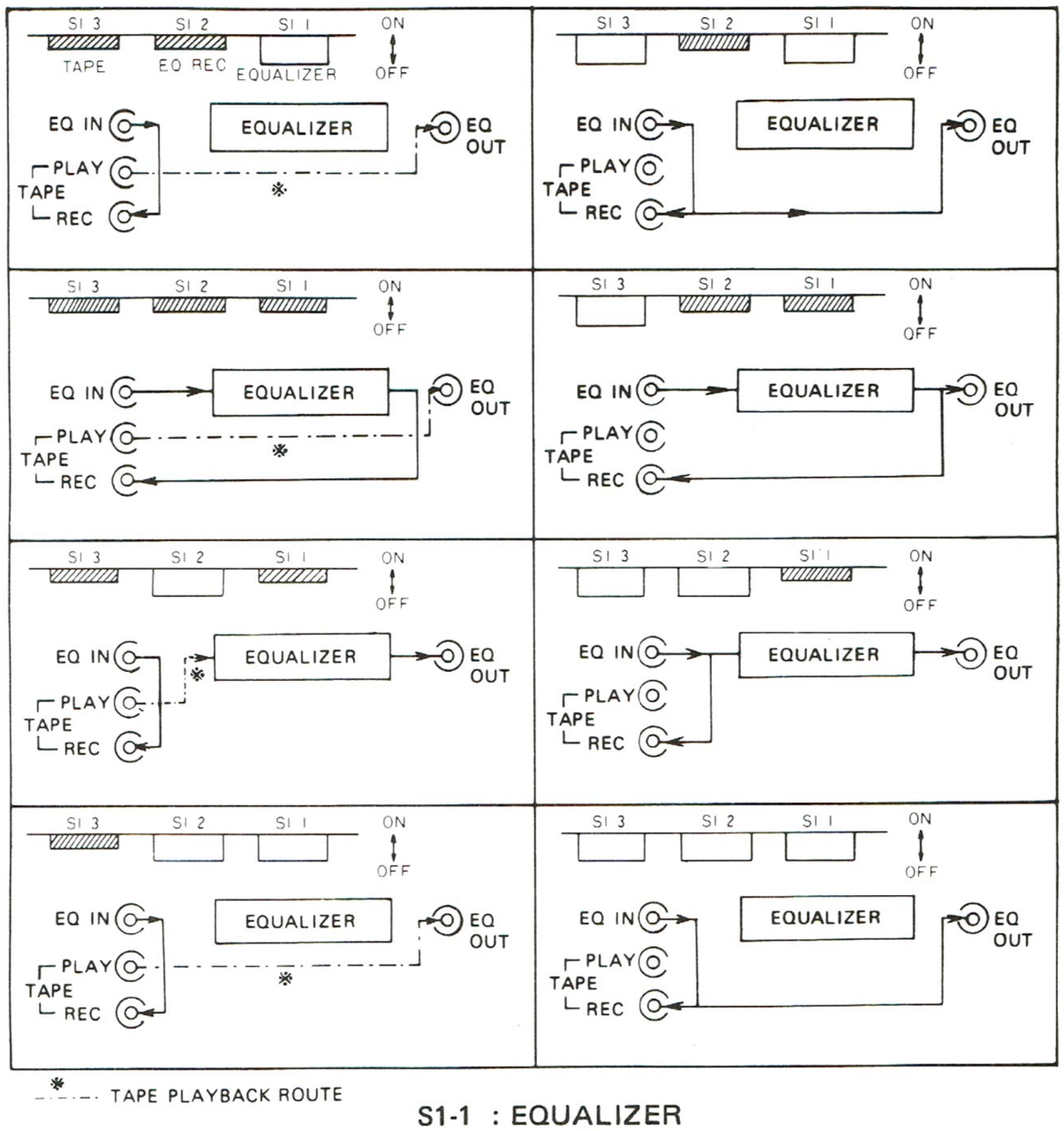

S1-1 : EQUALIZER
S1-2 : EQ REC
S1-3 : TAPE MONITOR

5. PARTS LOCATION

NOTES:

- *The ⚠ mark found on some component parts indicates the importance of the safety factor of the part. Therefore, when replacing, be sure to use parts of identical designation.*
- *For your Parts Stock Control, the fast moving items are indicated with the marks ★★ and ★ .*
  ★★ GENERALLY MOVES FASTER THAN ★
  This classification shall be adjusted by each distributor because it depends on model number, temperature, humidity, etc.

Front Panel View

Rear Panel View

Front View with Panel Removed

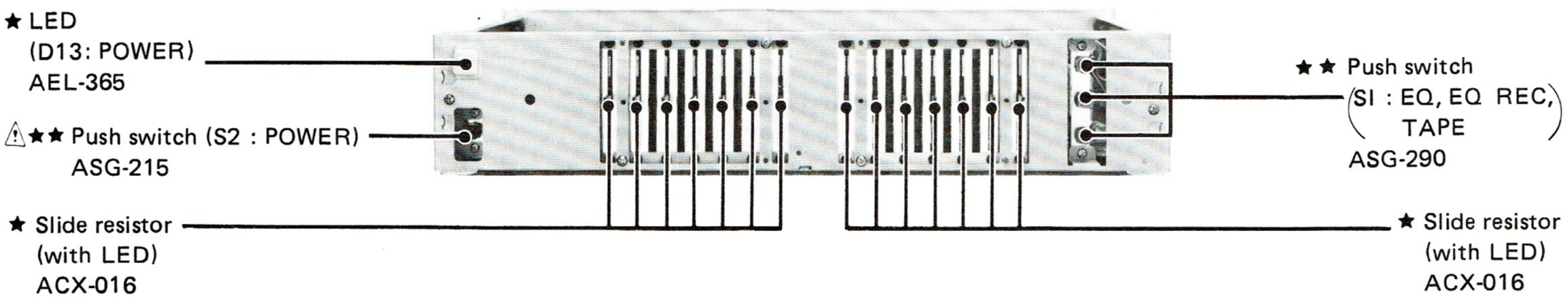

Top View with Bonnet Case Removed

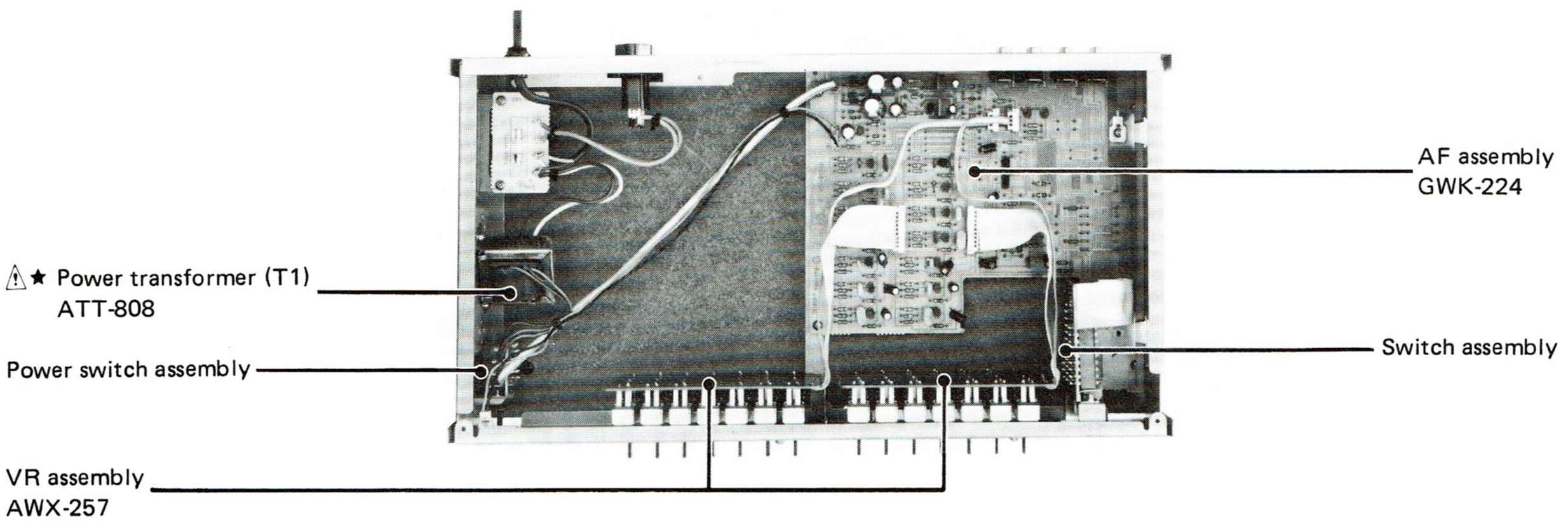

www.hifiengine.com

6. PARTS LIST

NOTES:

- *When ordering resistors, first convert resistance values into code form as shown in the following examples.*

  Ex. 1 When there are 2 effective digits (any digit apart from 0), such as 560 ohm and 47k ohm (tolerance is shown by J=5%, and K=10%).

560Ω	*56 × 10¹*	*561 ..... RD¼PS* 5 6 1 *J*
47kΩ	*47 × 10³*	*473 ..... RD¼PS* 4 7 3 *J*
0.5Ω	*0R5*	*..... RN2H* 0 R 5 *K*
1Ω	*010*	*..... RS1P* 0 1 0 *K*

  Ex. 2 When there are 3 effective digits (such as in high precision metal film resistors).

5.62kΩ	*562 × 10¹*	*5621 .... RN¼SR* 5 6 2 1 *F*

- *The ⚠ mark found on some component parts indicates the importance of the safety factor of the part. Therefore, when replacing, be sure to use parts of identical designation.*
- *For your Parts Stock Control, the fast moving items are indicated with the marks ★★ and ★ .*

  ★★ GENERALLY MOVES FASTER THAN ★

  This classification shall be adjusted by each distributor because it depends on model number, temperature, humidity, etc.

Miscellaneous Parts

P. C. BOARD ASSEMBLIES

Mark	Part No.	Symbol & Description
	GWK-224	AF assembly
	Not supply	Switch assembly
	Not supply	Power switch assembly
	Not supply	Fuse assembly
	AWX-257	VR assembly

OTHERS

Mark	Part No.	Symbol & Description
⚠ ★	ATT-808	T1 Power transformer (220/240V)
	AEL-365	D13 LED
⚠ ★★	AEK-403	FU1 Fuse T2.5A
⚠	AKP-026	AC socket (AC OUTLETS)
⚠	ADG-071	AC power cord

AF Assembly (GWK-224)

SEMICONDUCTORS

Mark	Part No.	Symbol & Description
★★	M5218L (NJM4558DX)	Q1 – Q3
★★	2SC1815 (2SC1919)	Q4 – Q17
★★	2SD313 (2SD880)	Q18, Q19
★★	2SA733A (2SA1115)	Q20
★★	2SC1815 (2SC945A) (JC501)	Q21 – Q24
★	10E2 (SIB01-02)	D1 – D4
★	KZL120	D5, D6
★	1S1555 (1S2076)	D7 – D14
★	STV3H	D15

CAPACITORS

Mark	Part No.	Symbol & Description
	CEA 100M 50L	C1, C2, C5, C6
	CEA R33M 50L	C15, C16
	CEA R68M 50L	C17, C18
	CEA 1R5M 50L	C19, C20
	CEA 101M 25L	C37 – C39
	CEA 220M 25L	C40, C41
	CEA 471M 25L	C35, C36
	CQMA 124K 50	C13, C14, C33, C34
	CQMA 153K 50	C29, C30
	CQMA 223K 50	C9, C10
	CQMA 393K 50	C31, C32
	CQMA 563K 50	C11, C12
	CKDYB 102K 50	C23, C24
	CKDYB 222K 50	C25, C26
	CKDYB 391K 50	C21, C22
	CKDYB 562K 50	C27, C28
	CKDYB 822K 50	C7, C8
	CCDSL 221J 50	C3, C4

RESISTORS

NOTE: When ordering resistors, convert the resistance value into code form, and then rewrite the part no. as before.

Mark	Part No.	Symbol & Description
	RD1/4PM □□□J	All resistors

OTHERS

Mark	Part No.	Symbol & Description
	AKB-094	Terminal 4P (TAPE, EQUALIZER)

www.hifiengine.com

Switch Assembly

Mark	Part No.	Symbol & Description
★★	ASG-290	S1 Push switch (EQUALIZER, EQ REC / TAPE MONITOR)

Power Switch Assembly

Mark	Part No.	Symbol & Description
★★	ASG-215	S2 Push switch (POWER)
	ACG-019	C42, C43 Ceramic 0.01/AC250

VR Assembly (AWX-257)

Mark	Part No.	Symbol & Description
★	ACX-016	VR1 –VR7 Slide resistor (with LED)

External Apearance of Transistor and ICs

M5218L

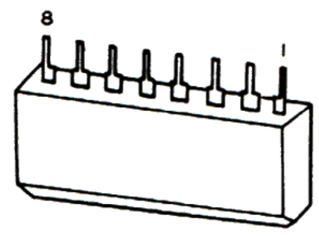

NJM4558DX

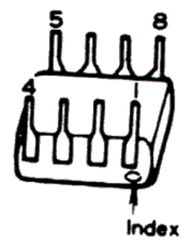

2SC1815

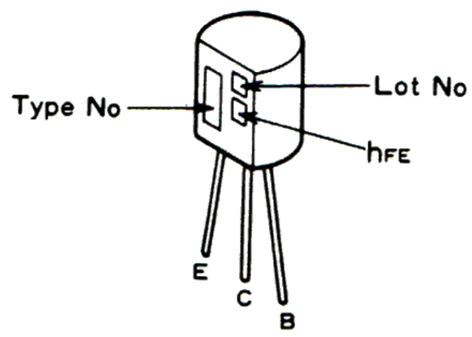

2SC1919

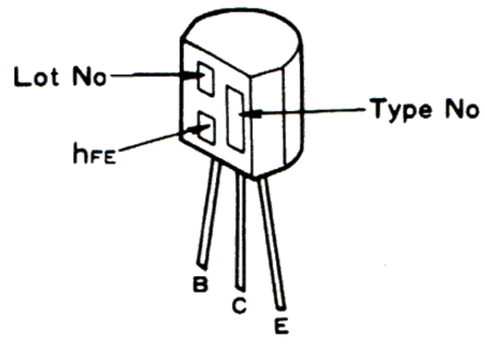

2SC945A
2SA733A

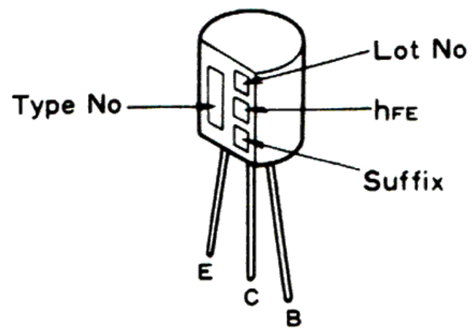

2SA1115

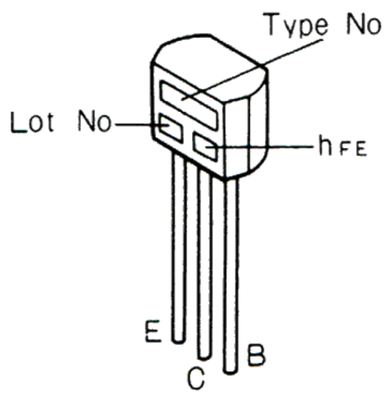

2SD313
2SD880

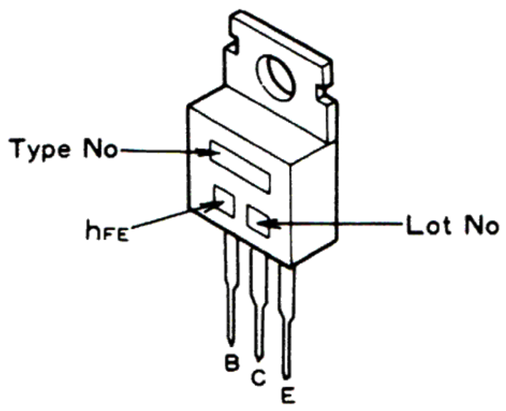

JC501

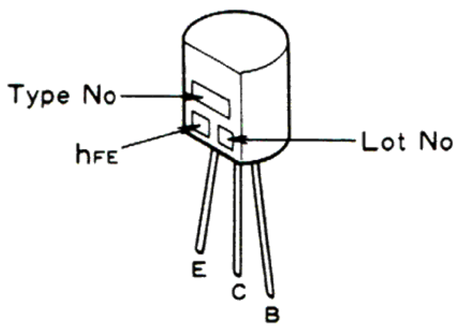

www.hifiengine.com

7. P.C.BOARDS CONNECTION DIAGRAM

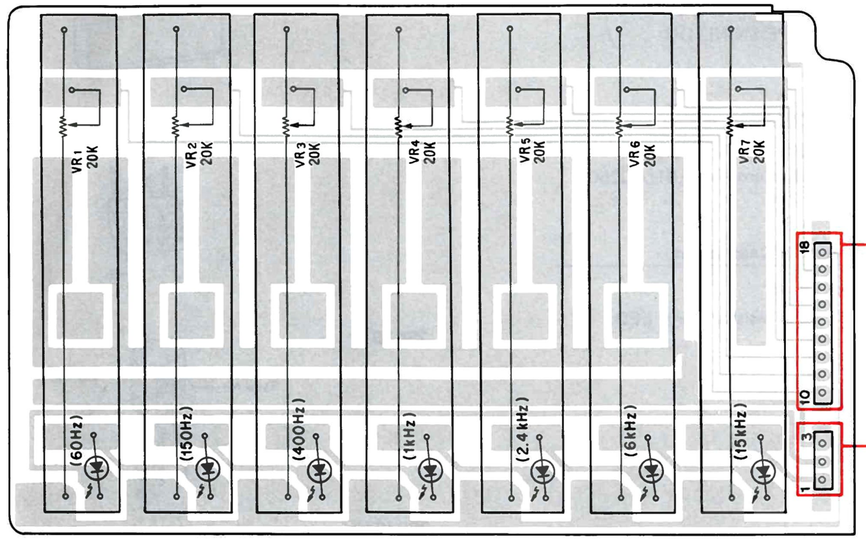

VOLUME Ass'y (AWX-257)

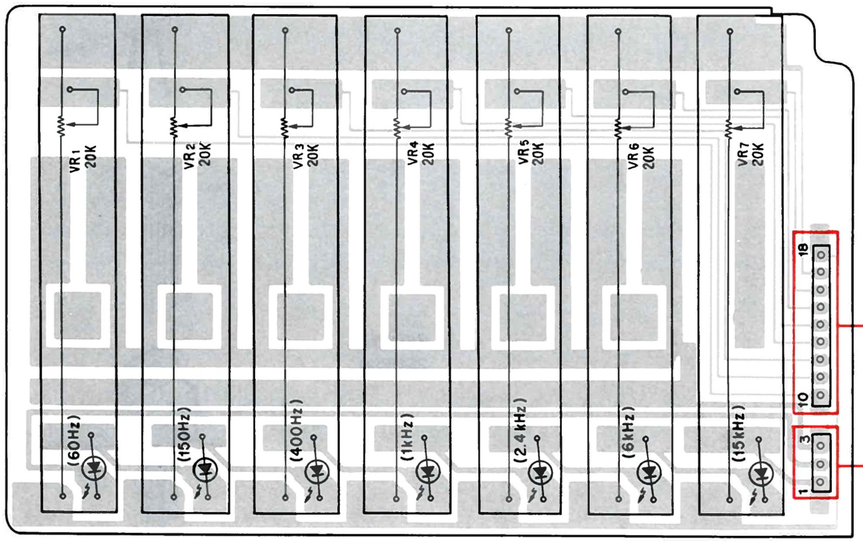

VOLUME Ass'y(AWX-257)

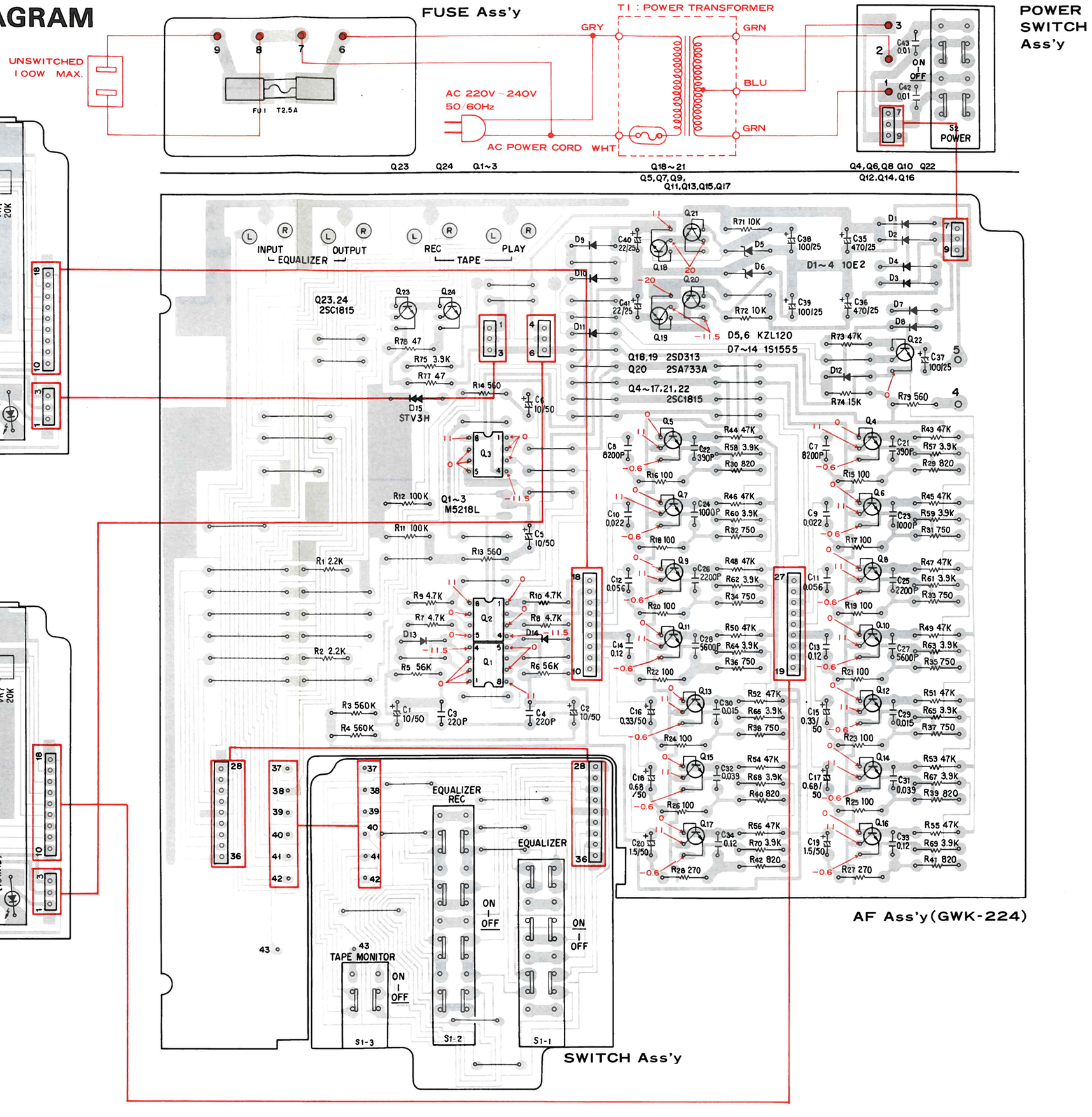

8. SCHEMATIC DIAGRAM

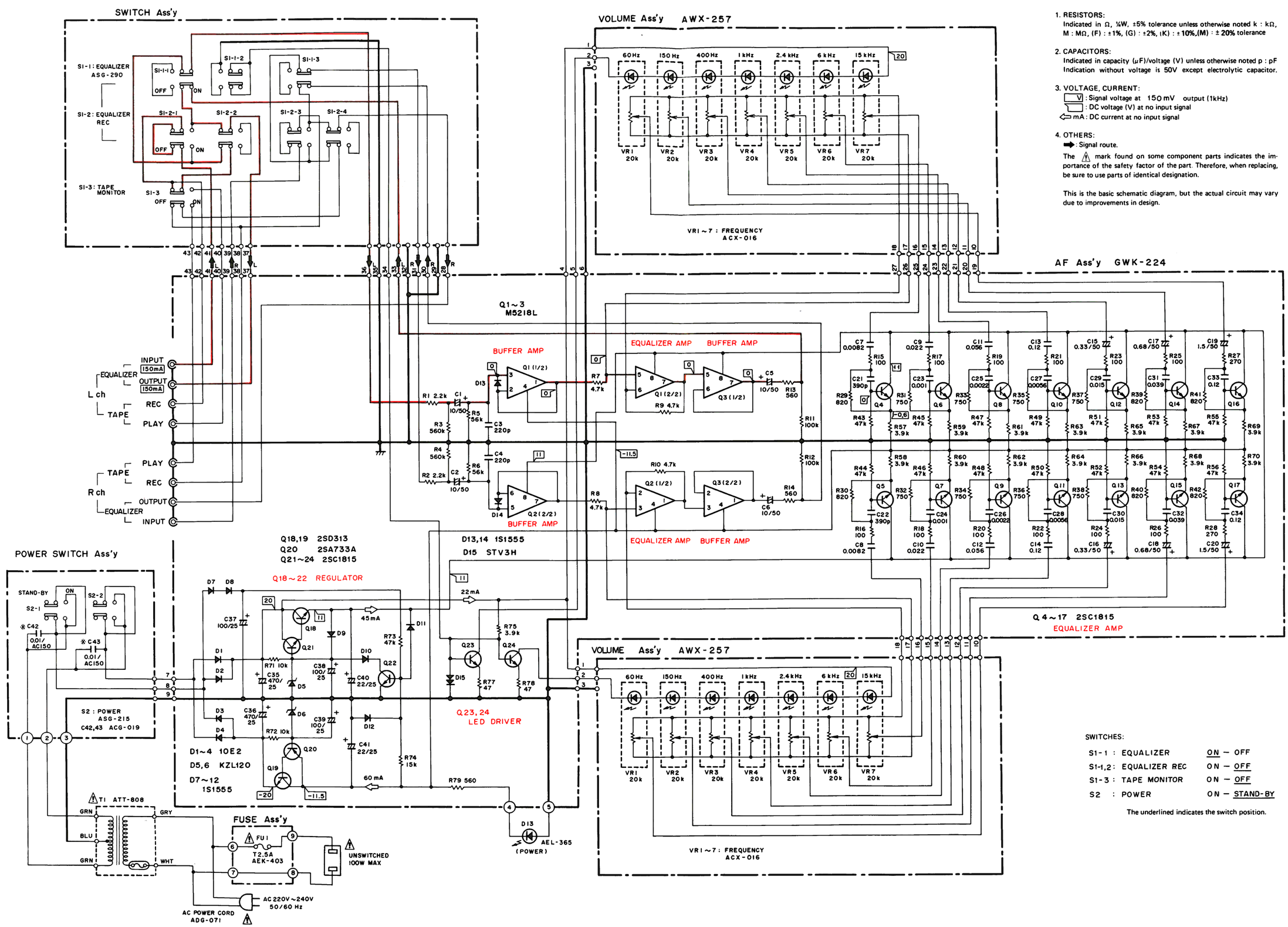

1. RESISTORS:
Indicated in Ω, ¼W, ±5% tolerance unless otherwise noted k : kΩ, M : MΩ, (F) : ±1%, (G) : ±2%, (K) : ±10%, (M) : ±20% tolerance

2. CAPACITORS:
Indicated in capacity (μF)/voltage (V) unless otherwise noted p : pF
Indication without voltage is 50V except electrolytic capacitor.

3. VOLTAGE, CURRENT:
V : Signal voltage at 150 mV output (1kHz)
: DC voltage (V) at no input signal
mA : DC current at no input signal

4. OTHERS:
: Signal route.
The ⚠ mark found on some component parts indicates the importance of the safety factor of the part. Therefore, when replacing, be sure to use parts of identical designation.

This is the basic schematic diagram, but the actual circuit may vary due to improvements in design.

SWITCHES:

S1-1 :	EQUALIZER	ON – OFF
S1-1,2 :	EQUALIZER REC	ON – OFF
S1-3 :	TAPE MONITOR	ON – OFF
S2 :	POWER	ON – STAND-BY

The underlined indicates the switch position.

9. EXPLODED VIEW

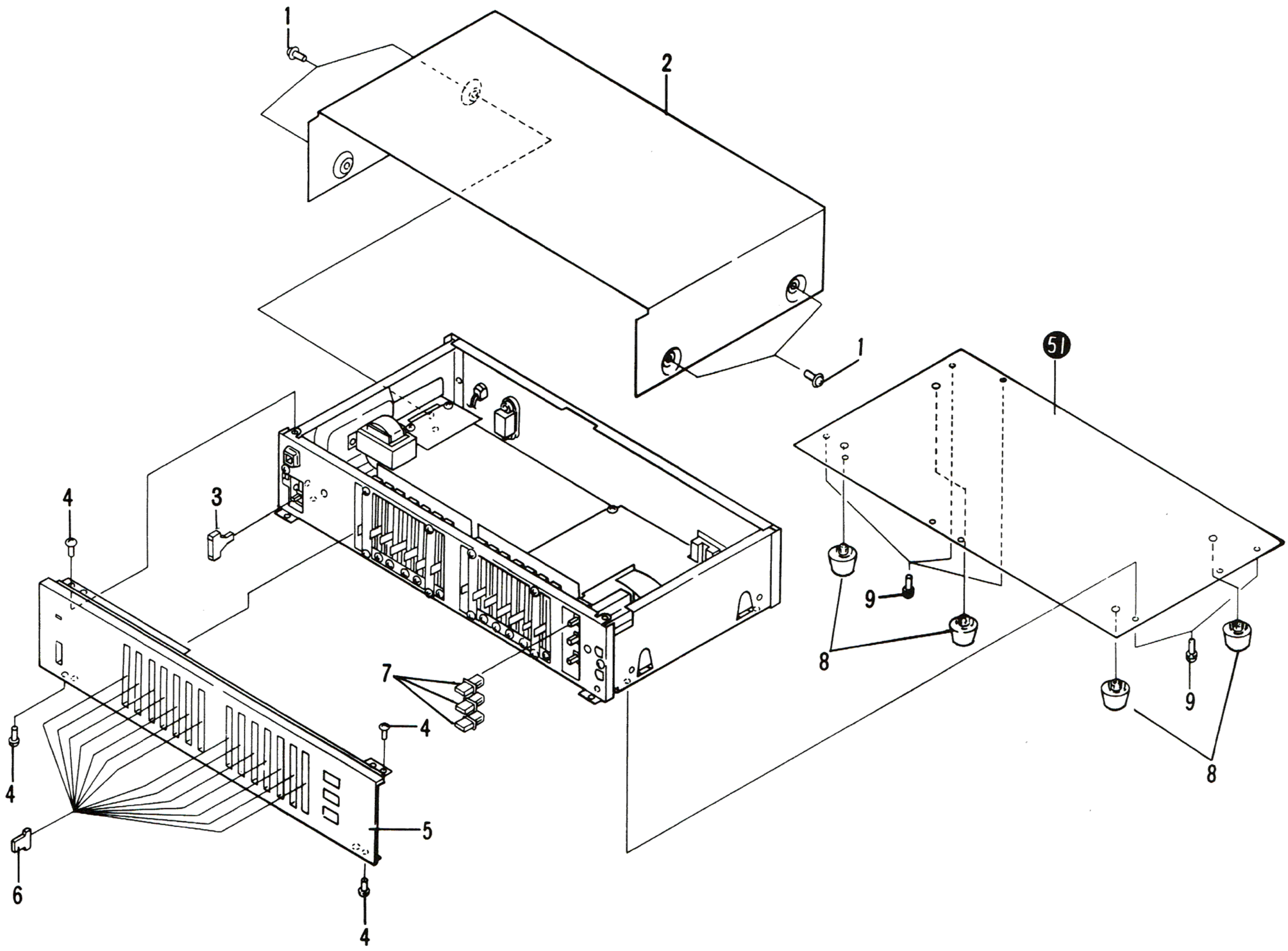

NOTES:

- *Parts without part number cannot be supplied.*
- *The ⚠ mark found on some component parts indicates the importance of the safety factor of the part. Therefore, when replacing, be sure to use parts of identical designation.*
- *For your Parts Stock Control, the fast moving items are indicated with the marks ★★ and ★ .*
  ★★ GENERALLY MOVES FASTER THAN ★
  This classification shall be adjusted by each distributor because it depends on model number, temperature, humidity, etc.

Parts List

Mark	No.	Part No.	Description	Mark	No.	Part No.	Description
	1.	FBT40P080FZK	Screw		6.	AAD-665	Slide knob (EQUALIZER)
	2.	ANE-290	Bonnet case		7.	AAD-396	Push knob (EQ, EQ REC, TAPE)
	3.	AAD-664	Power knob (POWER)				
	4.	VBZ30P060FMC	Screw		8.	AEP-039	Foot assembly
	5.	ANM-409	Front panel assembly		9.	ABA-252	Screw M3 x 8
					51.		Bottom plate

www.hifiengine.com

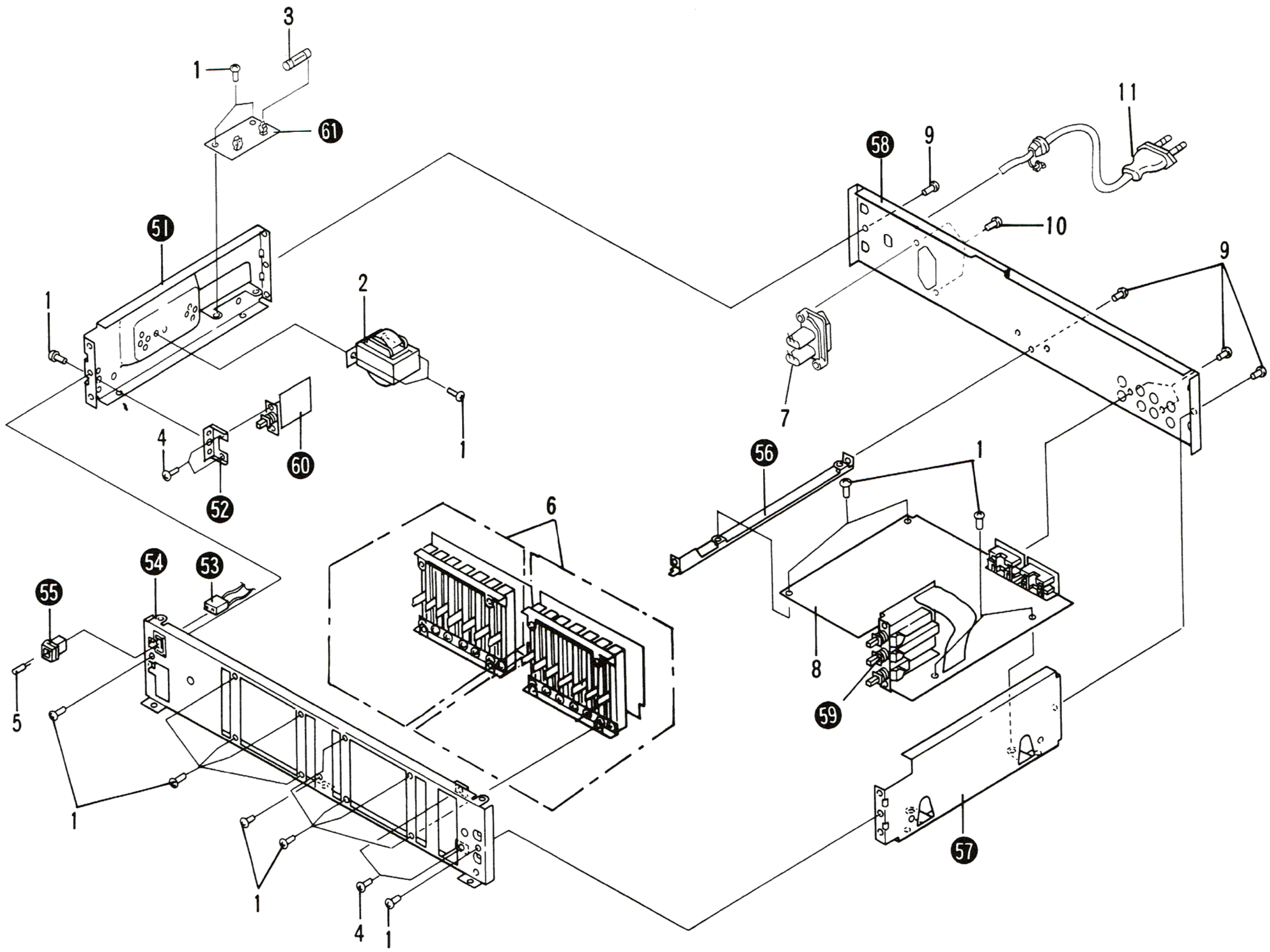

Parts List

Mark	No.	Part No.	Description	Mark	No.	Part No.	Description
	1.	VBZ30P060FMC	Screw		51.		Side frame L
⚠ ★	2.	ATT-808	Power transformer		52.		Switch mounting palte
⚠ ★★	3.	AEK-403	Fuse T2.5A		53.		LED socket
	4.	PMZ30P060FMC	Screw		54.		Front stay
	5.	AEL-365	LED D13		55.		LED holder
	6.	AWX-257	VR assembly		56.		Center frame
⚠	7.	AKP-026	AC socket		57.		Side frame R
	8.	GWK-224	AF assembly		58.		Rear panel
	9.		BBT30P080FZK		59.		Switch assembly
	10.	MTZ30P100FZK	Screw		60.		Power switch assembly
⚠	11.	ADG-071	AC power cord		61.		Fuse assembly

www.hifiengine.com

10. PACKING

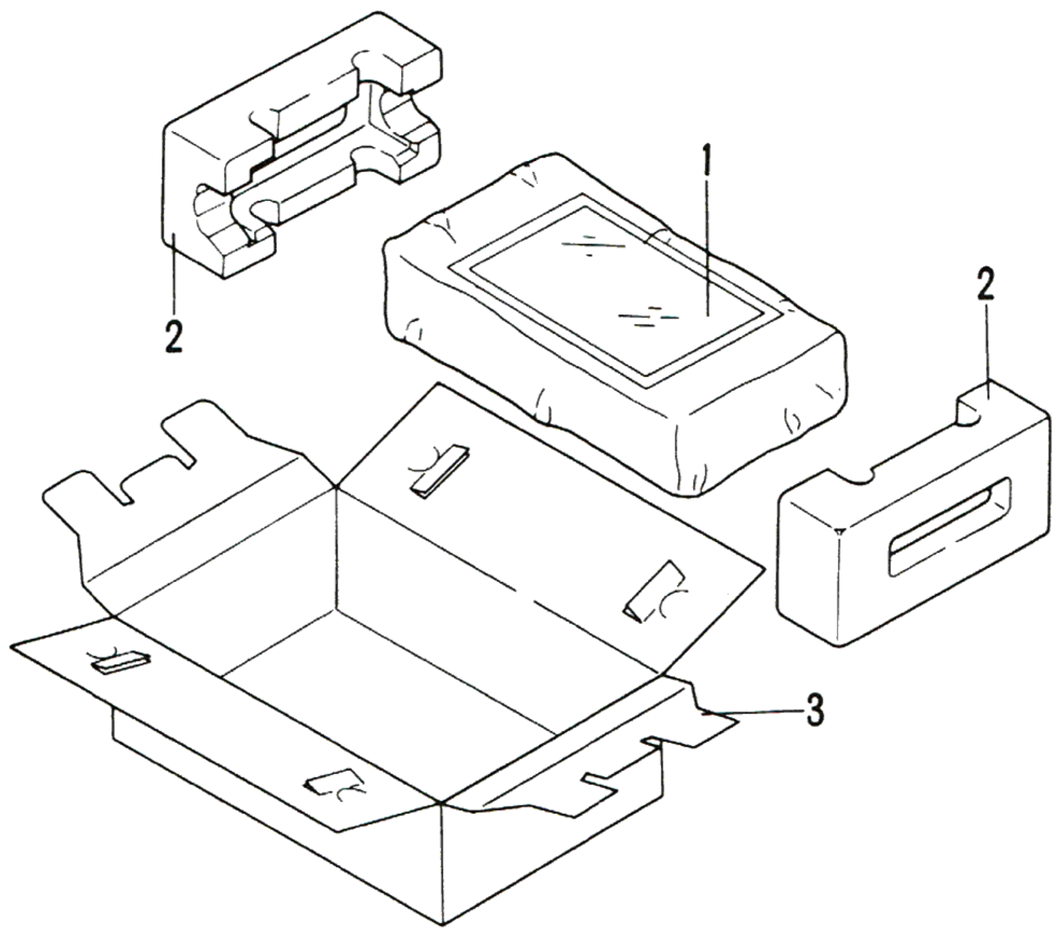

Parts List

Mark	No.	Part No.	Description
	1.	ARE-071	Operating instructions
	2.	AHA-290	Side pad
	3.	AHE-196	Packing case
		ADE-055	Connection cord

11. SAFETY INFORMATION

1. SAFETY PRECAUTIONS

The following check should be performed for the continued protection of the customer and service tecnician.

LEAKAGE CURRENT CHECK

Measure leakage current to a known earth ground (water pipe, conduit, etc.) by connecting a leakage current tester such as Simpson Model 229-2 or equivalent between the earth ground and all exposed metal parts of the appliance (input/output terminals, screwheads, metal overlays, control shaft, etc.). Plug the AC line cord of the appliance directly into a 120V AC 60Hz outlet and turn the AC power switch on. Any current measured must not exceed 0.5mA.

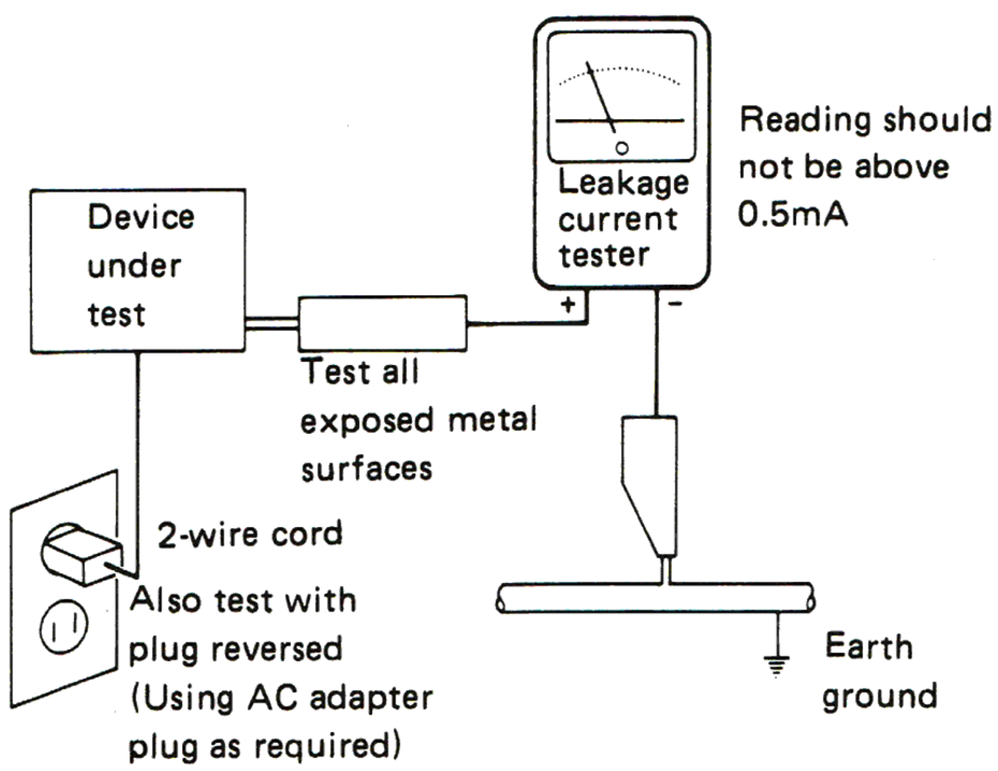

AC Leakage Test

ANY MEASUREMENTS NOT WITHIN THE LIMITS OUTLINED ABOVE ARE INDICATIVE OF A POTENTIAL SHOCK HAZARD AND MUST BE CORRECTED BEFORE RETURNING THE APPLIANCE TO THE CUSTOMER.

2. PRODUCT SAFETY NOTICE

Many electrical and mechanical parts in the appliance have special safety related characteristics. These are often not evident from visual inspection nor the protection afforded by them necessarily can be obtained by using replacement components rated for voltage, wattage, etc. Replacement parts which have these special safety characteristics are identified in this Service Manual.

Electrical components having such features are identified by marking with a ⚠ on the schematics and on the parts list in this Service Manual.

The use of a substitute replacement component which dose not have the same safety characteristics as the PIONEER recommended replacement one, shown in the parts list in this Service Manual, may create shock, fire, or other hazards.

Product Safety is continuously under review and new instructions are issued from time to time. For the latest information, always consult the current PIONEER Service Manual. A subscription to, or additional copies of, PIONEER Service Manual may be obtained at a nominal charge from PIONEER.

www.hifiengine.com