ADDITIONAL

Service Manual

PIONEER®

ORDER NO.
ARP-331-0

GRAPHIC EQUALIZER

SG-540

WB,
KU, R/G

- **The basic performance of the WB, KU and R/G types are the same as the WE type. Please refer to the SG-540 service manual (ARP-330-0) with the exception of this service manual.**

CONTRAST OF MISCELLANEOUS PARTS

NOTES:
- *Parts without part number cannot be supplied.*
- *The ⚠ mark found on some component parts indicates the importance of the safety factor of the part. Therefore, when replacing, be sure to use parts of identical designation.*
- *For your Parts Stock Control, the fast moving items are indicated with the marks ★★ and ★ .*
  ★★ GENERALLY MOVES FASTER THAN ★
  This classification shall be adjusted by each distributor because it depends on model number, temperature, humidity, etc.

Mark	Symbol & Description	Part No.				Remarks
		WE type	WB type	KU type	R/G type	
	VR assembly → Slide resistor	AWX-257 →ACX-302	ACX-302	ACX-302	ACX-302	
	Fuse assembly	No supply	No supply	. . .	. . .	
⚠ ★	T1 Power transformer (220/240V)	ATT-808	ATT-808	. . .	. . .	
	T1 Power transformer (120V)	. . .	. . .	ATT-806	. . .	
	T1 Power transformer (110 – 120/220 – 240V)	. . .	. . .	. . .	ATT-807	
⚠	AC socket	AKP-026	AKP-509	AKP-038	AKP-038	
⚠	AC power cord	ADG-071	ADG-078	ADG-052	ADG-072	
	Strain reliet	. . .	. . .	AEC-327	. . .	
⚠ ★★	FU1 Fuse T2,5A	AEK-403	AEK-403	. . .	. . .	
⚠	Line voltage selector	. . .	. . .	. . .	AKX-501	
	Screw	. . .	. . .	. . .	VTZ30P100FZK	For line voltage selector switch
	Operating instructions (English/German/French/ Italian)	ARE-071	. . .	. . .	. . .	
	Operating instructions (English)	. . .	ARB-552	ARB-552	ARB-552	
	Packing case	AHE-196	AHE-196	AHE-241	AHE-196	

PIONEER ELECTRONIC CORPORATION 4-1, Meguro 1-Chome, Meguro-ku, Tokyo 153, Japan
PIONEER ELECTRONICS [USA] INC. 1925 E. Dominguez St., Long Beach, California 90810 U.S.A.
PIONEER ELECTRONIC [EUROPE] N.V. Keetberglaan 1, 2740 Beveren, Belgium
PIONEER ELECTRONICS AUSTRALIA PTY. LTD. 178-184 Boundary Road, Braeside, Victoria 3195, Australia

1983 Printed in Japan

www.hifiengine.com

SCHEMATIC DIAGRAM

NOTE:
The indicated semiconductors are representative ones only. Other alternative semiconductors may be used and are listed in the parts list.

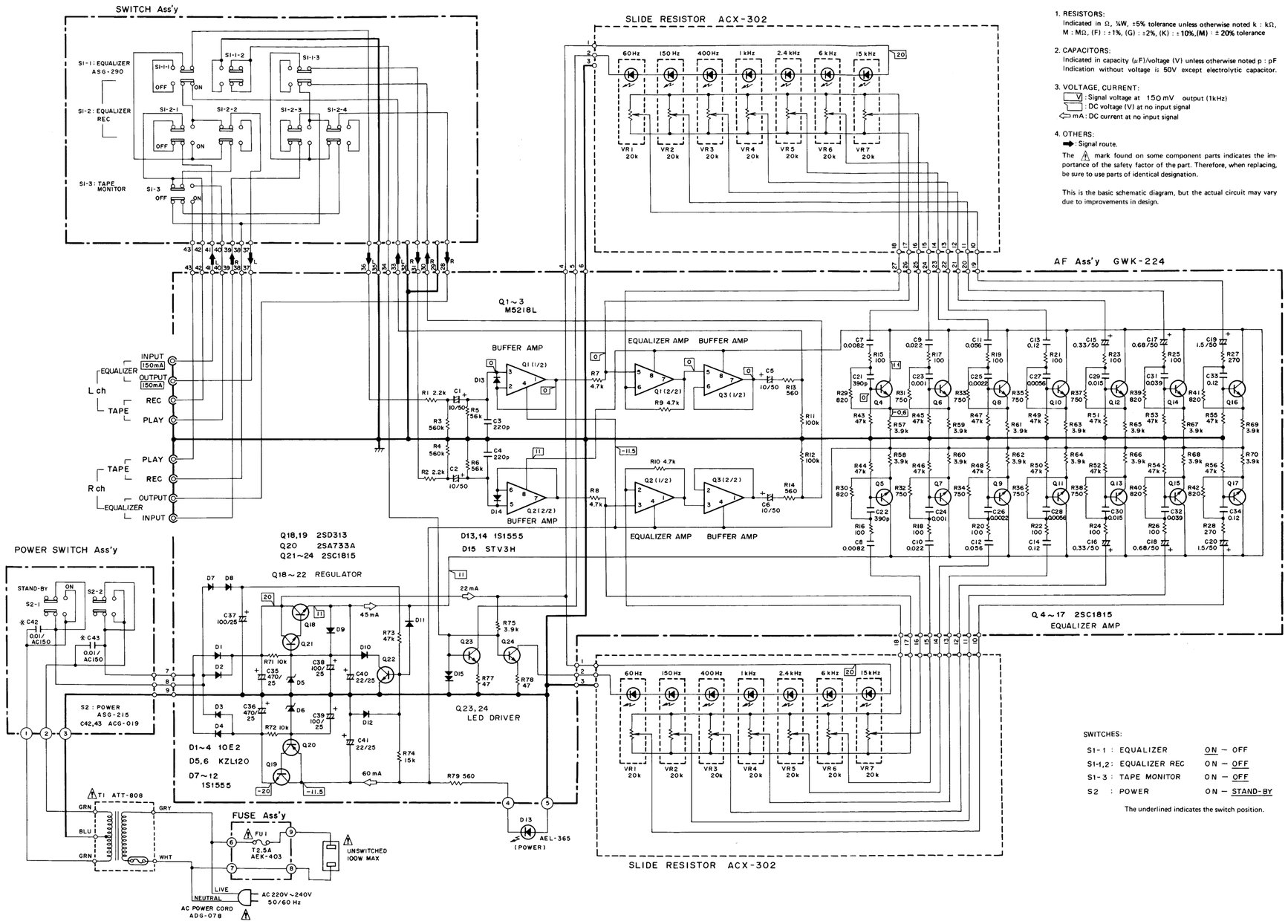

1. RESISTORS:
Indicated in Ω, ¼W, ±5% tolerance unless otherwise noted k : kΩ, M : MΩ, (F) : ±1%, (G) : ±2%, (K) : ±10%,(M) : ±20% tolerance

2. CAPACITORS:
Indicated in capacity (μF)/voltage (V) unless otherwise noted p : pF
Indication without voltage is 50V except electrolytic capacitor.

3. VOLTAGE, CURRENT:
V : Signal voltage at 150mV output (1kHz)
: DC voltage (V) at no input signal
mA : DC current at no input signal

4. OTHERS:
: Signal route.
The ⚠ mark found on some component parts indicates the importance of the safety factor of the part. Therefore, when replacing, be sure to use parts of identical designation.

This is the basic schematic diagram, but the actual circuit may vary due to improvements in design.

SWITCHES:

S1-1 :	EQUALIZER	ON – OFF
S1-1,2 :	EQUALIZER REC	ON – OFF
S1-3 :	TAPE MONITOR	ON – OFF
S2 :	POWER	ON – STAND-BY

The underlined indicates the switch position.

POWER SUPPLY CIRCUIT FOR R/G TYPE

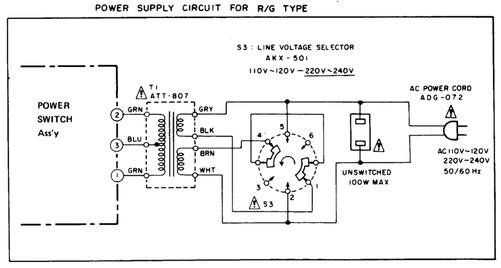

POWER SUPPLY CIRCUIT FOR KU TYPE

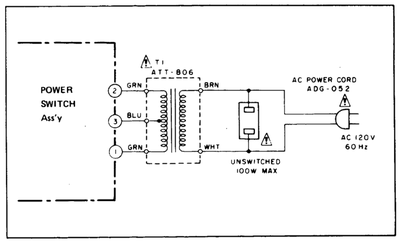

SPECIFICATIONS

The specifications for WB, KU and R/G are the same as the WE type except for following section:

Power Supply Section/Miscellaneous

Power Requirements
KU model . . . . . AC 120 Volts, 60 Hz
R/G model
~ AC 110V – 120V/220V–240V switchable, 50/60Hz
WB model . . . . . a.c. 220 – 240 Volts, 50/60Hz
Power Consumption 10W
Dimensions . . . . . 420(W) x 98(H) x 241(D)mm
16-9/16(W) x 3-7/8(H) x 9-1/2(D)mm
Weight . . . . . .3kg (6 lb 10 oz)

www.hifiengine.com