Pioneer

Service Manual

SX-20-K

ORDER NO.
RRV4392

STEREO RECEIVER

SX-20-K
SX-20-S

THIS MANUAL IS APPLICABLE TO THE FOLLOWING MODEL(S) AND TYPE(S).

Model	Type	Power Requirement	Remarks
SX-20-K	YXE8	AC 220 V to 230 V	
SX-20-S	YXE8	AC 220 V to 230 V	

PIONEER CORPORATION 1-1, Shin-ogura, Saiwai-ku, Kawasaki-shi, Kanagawa 212-0031, Japan
PIONEER ELECTRONICS (USA) INC. P.O. Box 1760, Long Beach, CA 90801-1760, U.S.A.
PIONEER EUROPE NV Haven 1087, Keetberglaan 1, 9120 Melsele, Belgium
PIONEER ELECTRONICS ASIACENTRE PTE. LTD. 253 Alexandra Road, #04-01, Singapore 159936
ⒸPIONEER CORPORATION 2012

K-ZZZ OCT. 2012 Printed in Japan

SAFETY INFORMATION

This service manual is intended for qualified service technicians; it is not meant for the casual do-it-yourselfer. Qualified technicians have the necessary test equipment and tools, and have been trained to properly and safely repair complex products such as those covered by this manual.
Improperly performed repairs can adversely affect the safety and reliability of the product and may void the warranty. If you are not qualified to perform the repair of this product properly and safely, you should not risk trying to do so and refer the repair to a qualified service technician.

CONTENTS

SAFETY INFORMATION....2
1. SERVICE PRECAUTIONS....3
1.1 NOTES ON SOLDERING....3
1.2 SERVICE NOTICE....3
2. SPECIFICATIONS....4
3. BASIC ITEMS FOR SERVICE....5
3.1 CHECK POINTS AFTER SERVICING....5
3.2 PCB LOCATIONS....6
4. BLOCK DIAGRAM....8
4.1 OVERALL WIRING DIAGRAM....8
4.2 SIGNAL BLOCK DIAGRAM....10
4.3 LEVEL and POWER SUPPLY BLOCK DIAGRAM....12
4.4 GND MAP DIAGRAM....14
5. DIAGNOSIS....16
5.1 TROUBLESHOOTING....16
5.2 DETECTION CIRCUIT....22
5.3 IC INFORMATION....23
6. SERVICE MODE....33
6.1 SERVICE MODE....33
6.2 FACTORY DEFAULT SETTINGS....36
7. DISASSEMBLY....37
8. EACH SETTING AND ADJUSTMENT....43
9. EXPLODED VIEWS AND PARTS LIST....44
9.1 PACKING SECTION....44
9.2 EXTERIOR SECTION....46
10. SCHEMATIC DIAGRAM....50
10.1 MAIN ASSY (1/2)....50
10.2 MAIN ASSY (2/2)....52
10.3 FRONT, LED, POWER SW. SPK SW AB, RMC and HP ASSYS....54
11. PCB CONNECTION DIAGRAM....56
11.1 MAIN ASSY....56
11.2 FRONT, POWER SW, HP, LED, RMC, SPK SW AB, GUIDE C and GUIDE R ASSYS....60
12. PCB PARTS LIST....64

1. SERVICE PRECAUTIONS

1.1 NOTES ON SOLDERING

- For environmental protection, lead-free solder is used on the printed circuit boards mounted in this unit.
  Be sure to use lead-free solder and a soldering iron that can meet specifications for use with lead-free solders for repairs accompanied by reworking of soldering.

- Compared with conventional eutectic solders, lead-free solders have higher melting points, by approximately 40 ºC.
  Therefore, for lead-free soldering, the tip temperature of a soldering iron must be set to around 373 ºC in general, although the temperature depends on the heat capacity of the PC board on which reworking is required and the weight of the tip of the soldering iron.

Do NOT use a soldering iron whose tip temperature cannot be controlled.

Compared with eutectic solders, lead-free solders have higher bond strengths but slower wetting times and higher melting temperatures (hard to melt/easy to harden).

The following lead-free solders are available as service parts:
- Parts numbers of lead-free solder:
  GYP1006 1.0 in dia.
  GYP1007 0.6 in dia.
  GYP1008 0.3 in dia.

1.2 SERVICE NOTICE

- **Discharging**
  For more detail, please refer to "7. DISASSEMBLY - 1. Discharging".

2. SPECIFICATIONS

Amplifier section

Power output specification is for when power supply is 230 V.

- **Continuous power output (both channels driven at 20 Hz to 20 kHz)**
  100 W+100 W (THD 1 %, 8 Ω)

Audio section

- **Input (Sensitivity/Impedance)**
  SACD/CD . . . . . 400 mV/47 kΩ
  PHONO (MM) . . . . . 5.5 mV/47 kΩ
- **Output (Level/Impedance)**
  RECORDER OUT . . . . . 400 mV/2.0 kΩ
- **Frequency response**
  SACD/CD, NETWORK, RECORDER
  . . . . . 5 Hz to 100 kHz $^{+0}_{-3}$ dB
  PHONO (MM) . . . . . 20 Hz to 20 kHz ±0.5 dB
- **Tone control (When VOLUME is set to –30 dB)**
  Bass . . . . . ± 14 dB (100 Hz)
  Treble . . . . . ± 14 dB (10 kHz)
- **Signal-to-Noise Ratio (IHF SHORTED, A-NETWORK)**
  SACD/CD, NETWORK, RECORDER . . . . . 100 dB
  PHONO (MM, 5.5 mV input) . . . . . 80 dB
- **Total Harmonic Distortion**
  SACD/CD, NETWORK, RECORDER . . . . . 0.01 % or less (1 kHz, 50 W, 8 Ω)
- **Speaker load impedance**
  A, B . . . . . 4 Ω to 16 Ω
  A+B . . . . . 8 Ω to 16 Ω

Tuner Section

Frequency Range (FM) . . . . . 87.5 MHz to 108 MHz
Antenna Input (FM) . . . . . 75 Ω unbalanced
Frequency Range (AM) . . . . . 531 kHz to 1602 kHz
Antenna (AM) . . . . . Loop antenna

Miscellaneous

Power requirements . . . . AC 220 V to 230 V, 50 Hz/60 Hz
Power consumption . . . . . 210 W
In standby . . . . . 0.3 W
Dimensions
. . . . . 435 mm (W) x 142.5 mm (H) x 364 mm (D)
Weight (without package) . . . . . 8.3 kg

Accessories

Remote control 1
AAA/IEC R03 dry cell batteries 2
AM loop antenna 1
FM wire antenna 1
Power cord
Warranty card
Quick start guide
Safety Brochure
Operating instructions (CD-ROM)

Note

- Specifications and the design are subject to possible modifications without notice, due to improvements.
- Corporation and product names mentioned herein are trademarks or registered trademarks of the respective corporations.

• Accessories

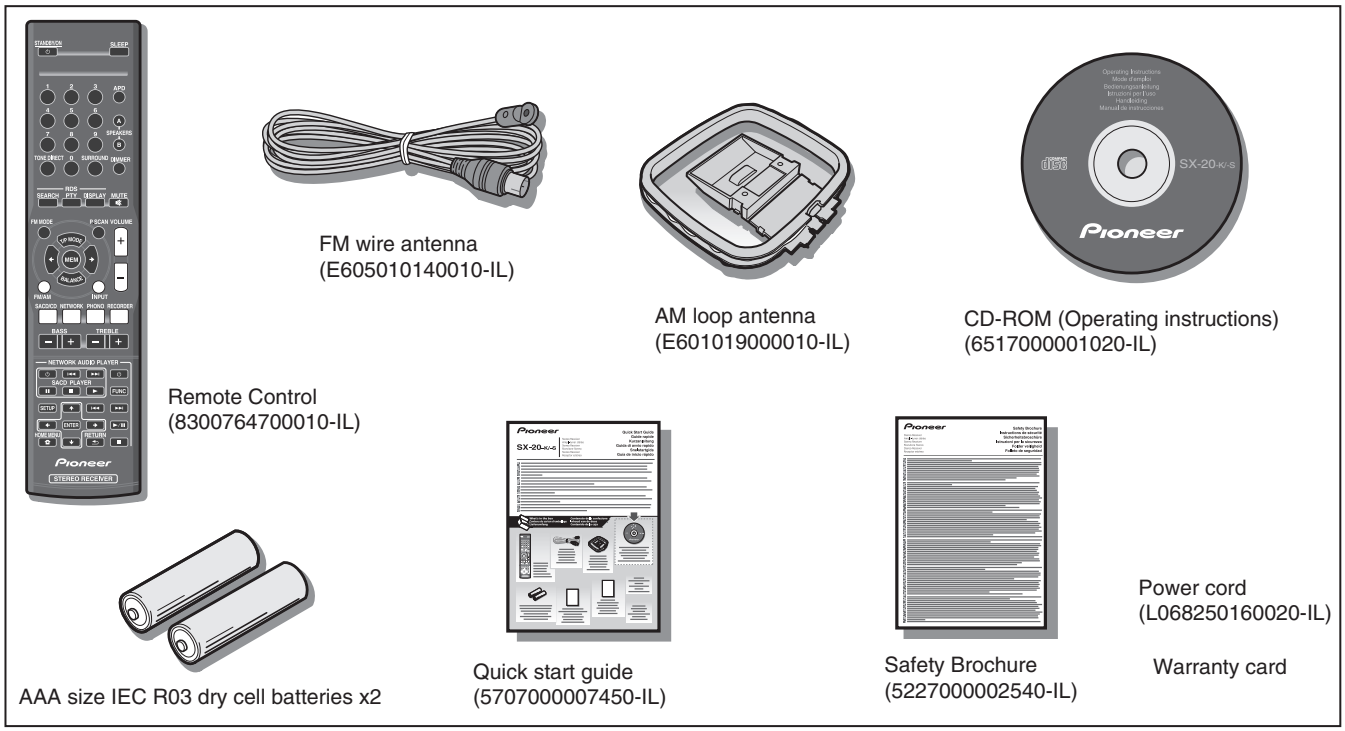

3. BASIC ITEMS FOR SERVICE
3.1 CHECK POINTS AFTER SERVICING

To keep the product quality after servicing, confirm recommended check points shown below.

No.	Procedures	Check points
1	Check the symptom pointed out by a customer	The pointed content should not reoccur Sound and operation should not be defective
2	Check each input and main VOL (check the operation of selector)	The sound is output by selecting an analog-connected input with a selector and the sound volume should change by rotating main VOL knob
3	Check the tone control, balance, and function	The sound quality or right and left balances should change by rotating each VOL knob
4	Check DIRECT functions	The tone control should be disabled by setting DIRECT function to ON.
5	Check the tuner (AM and FM) operations	Audio and operations must be normal.
6	Check SPEAKER A/B and headphone terminal	There should not be defect in sound such as noise
7	Check the external package	Check scratch or taint is not generated after accepting the repair

See the table below for the items to be checked regarding audio.

Item to be checked regarding audio
Distortion
Noise
Volume too low
Volume too high
Volume fluctuating
Sound interrupted

3.2 PCB LOCATIONS

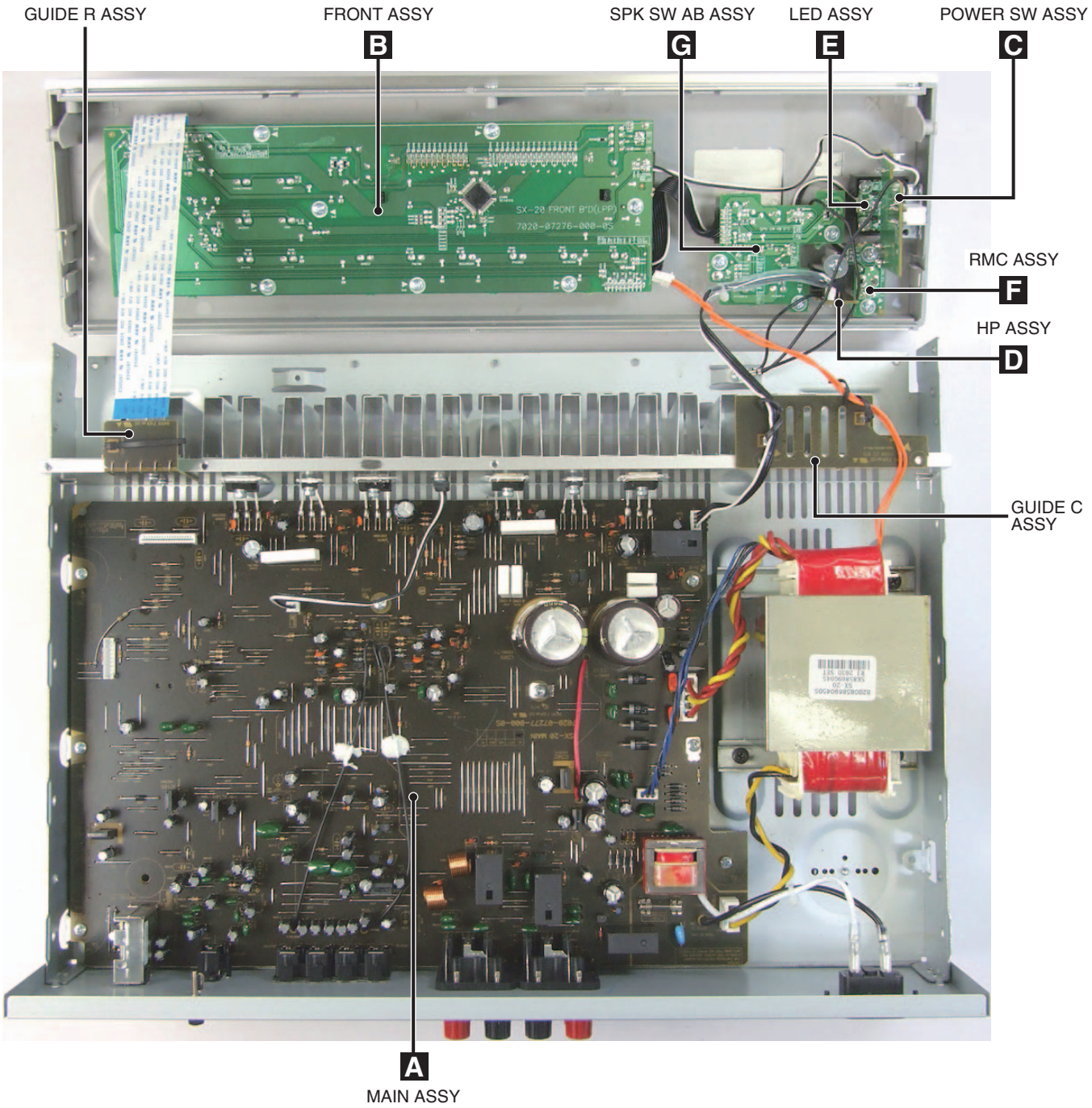

NOTES: ● *Parts marked by "NSP" are generally unavailable because they are not in our Master Spare Parts List.*
● *The ⚠ mark found on some component parts indicates the importance of the safety factor of the part. Therefore, when replacing, be sure to use parts of identical designation.*

LIST OF ASSEMBLIES

Mark	No.	Description	Part No.
NSP	1..	PCB TTL ASSY MAIN	7025HK1204010-IL
	2..	MAIN ASSY	7028072771010-IL

Mark	No.	Description	Part No.
NSP	1..	PCB TTL ASSY FRONT	7025HK1204011-IL
	2..	FRONT ASSY	7028072761010-IL
	2..	LED ASSY	7028072762010-IL
	2..	POWER SW ASSY	7028072763010-IL
	2..	SPK SW AB ASSY	7028072764010-IL
	2..	RMC ASSY	7028072765010-IL
	2..	HP ASSY	7028072766010-IL
	2..	GUIDE C ASSY	7028072767010-IL
	2..	GUIDE R ASSY	7028072768010-IL

A

B

C

D

E

F

4. BLOCK DIAGRAM
4.1 OVERALL WIRING DIAGRAM

SX−20 WIRING DIAGRAM

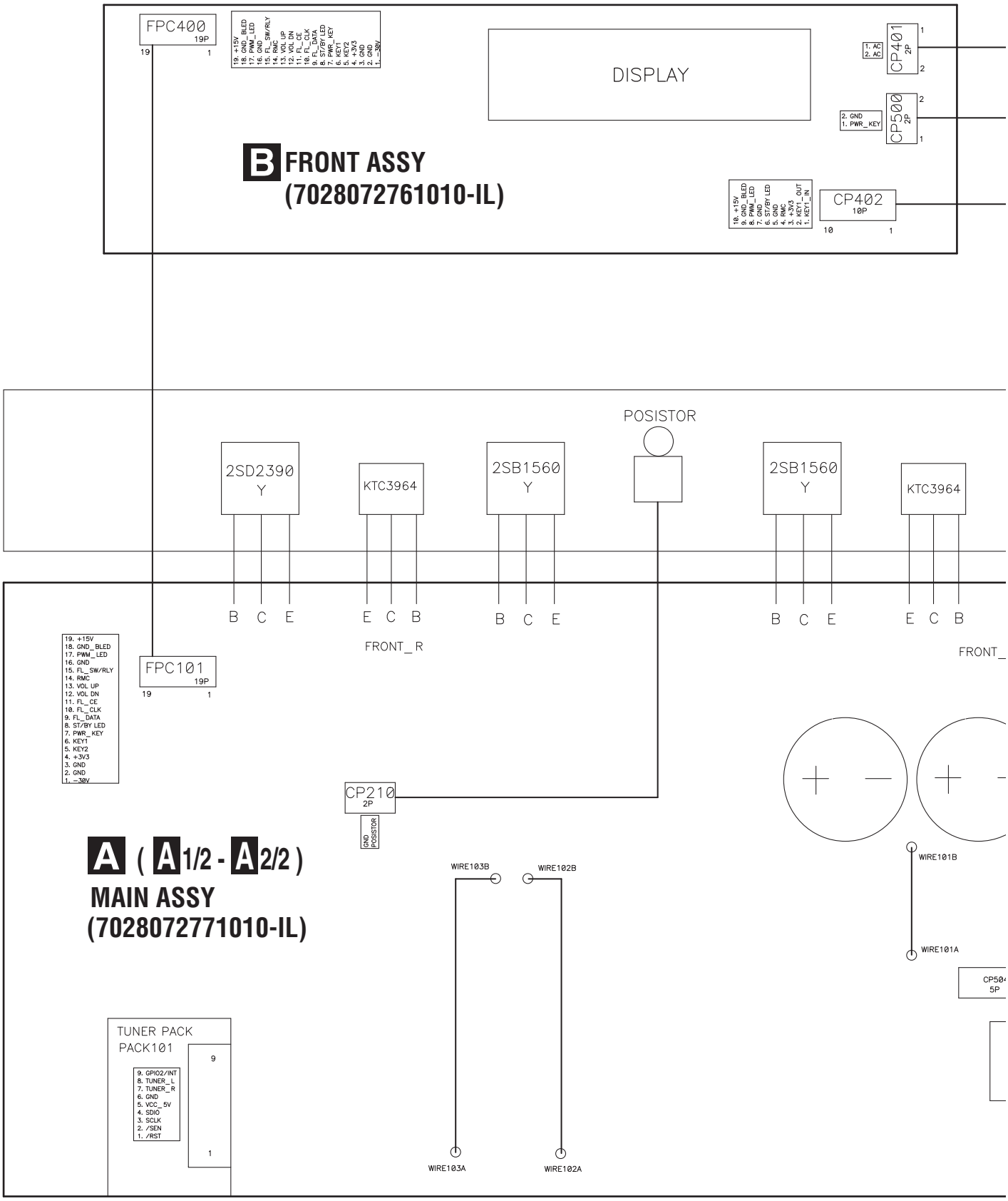

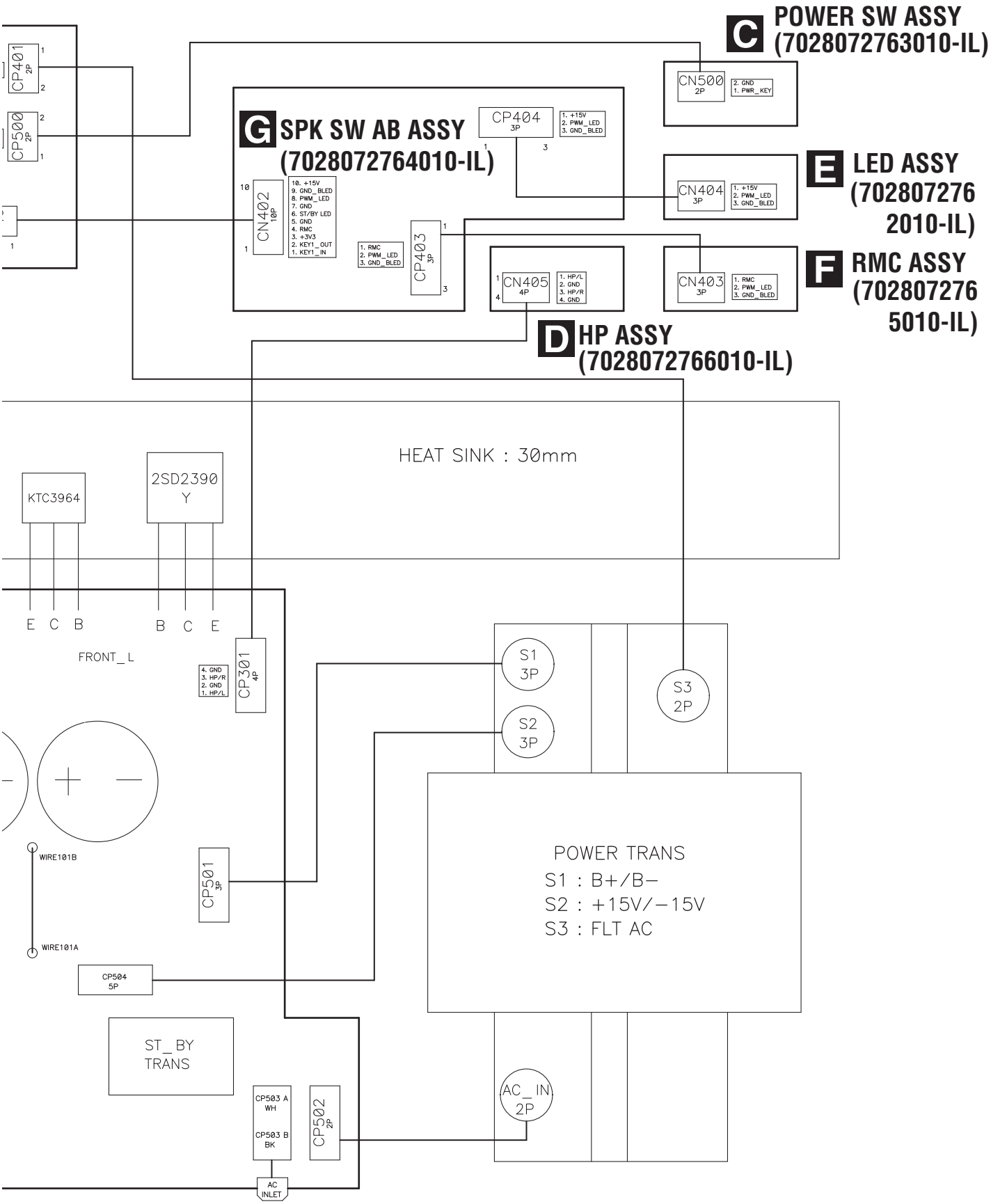
C POWER SW ASSY (7028072763010-IL)
CN500 2P
2. GND
1. PWR_KEY
G SPK SW AB ASSY (7028072764010-IL)
CP404 3P
1. +15V
2. PWM_LED
3. GND_BLED
CN402 10P
10. +15V
9. GND_BLED
8. PWM_LED
7. GND
6. ST/BY LED
5. GND
4. RMC
3. +3V3
2. KEY1_OUT
1. KEY1_IN
1. RMC
2. PWM_LED
3. GND_BLED
CP403 3P
CN405 4P
1. HP/L
2. GND
3. HP/R
4. GND
CN404 3P
1. +15V
2. PWM_LED
3. GND_BLED
E LED ASSY (702807276 2010-IL)
CN403 3P
1. RMC
2. PWM_LED
3. GND_BLED
F RMC ASSY (702807276 5010-IL)
D HP ASSY (7028072766010-IL)
CP401 2P
CP500 2P
HEAT SINK : 30mm
KTC3964
2SD2390 Y
E C B
B C E
FRONT_L
4. GND
3. HP/R
2. GND
1. HP/L
CP301 4P
S1 3P
S2 3P
S3 2P
WIRE101B
WIRE101A
CP501 3P
POWER TRANS
S1 : B+/B−
S2 : +15V/−15V
S3 : FLT AC
CP504 5P
ST_BY TRANS
CP503 A WH
CP503 B BK
CP502 2P
AC_IN 2P
AC INLET

4.2 SIGNAL BLOCK DIAGRAM

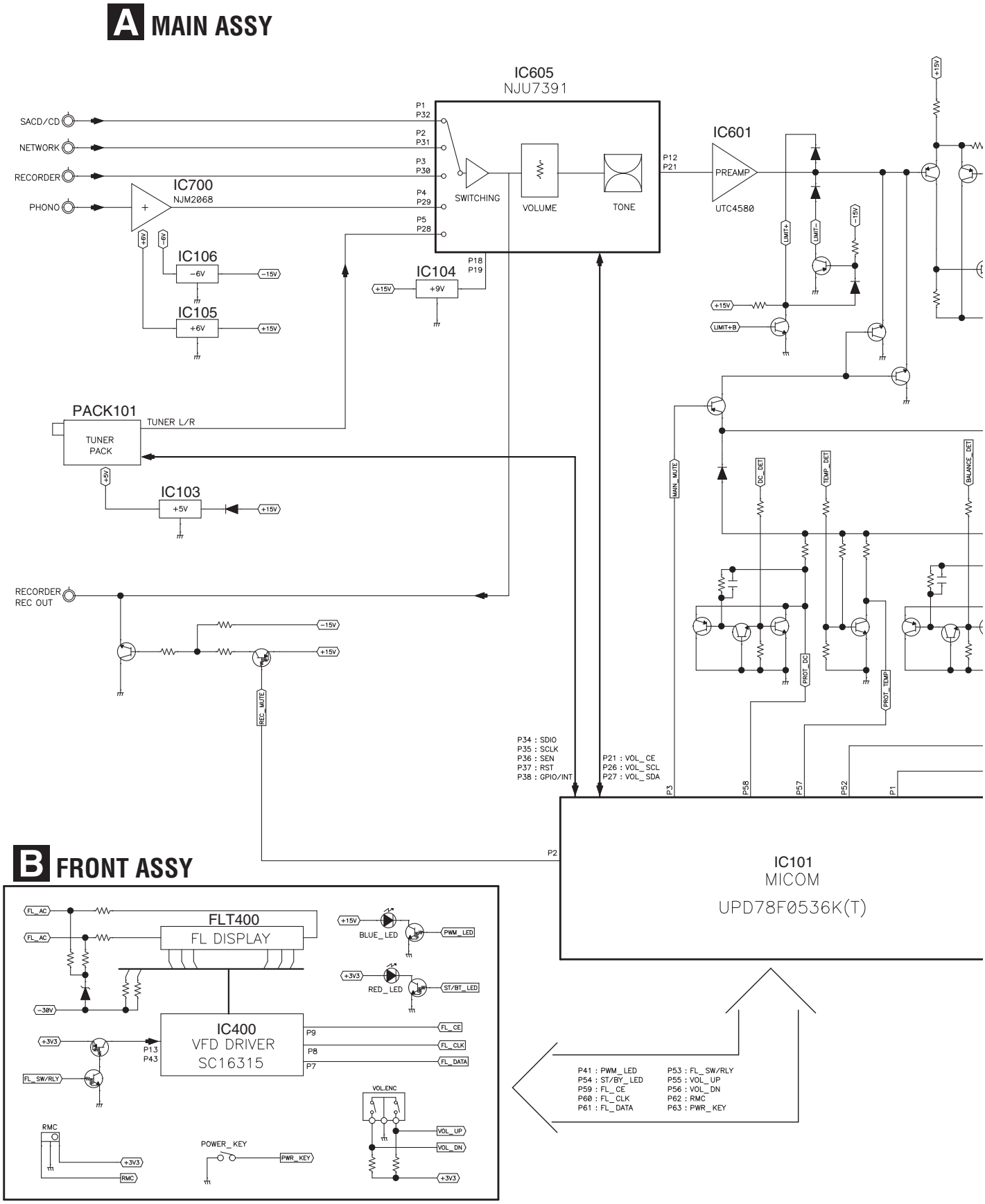

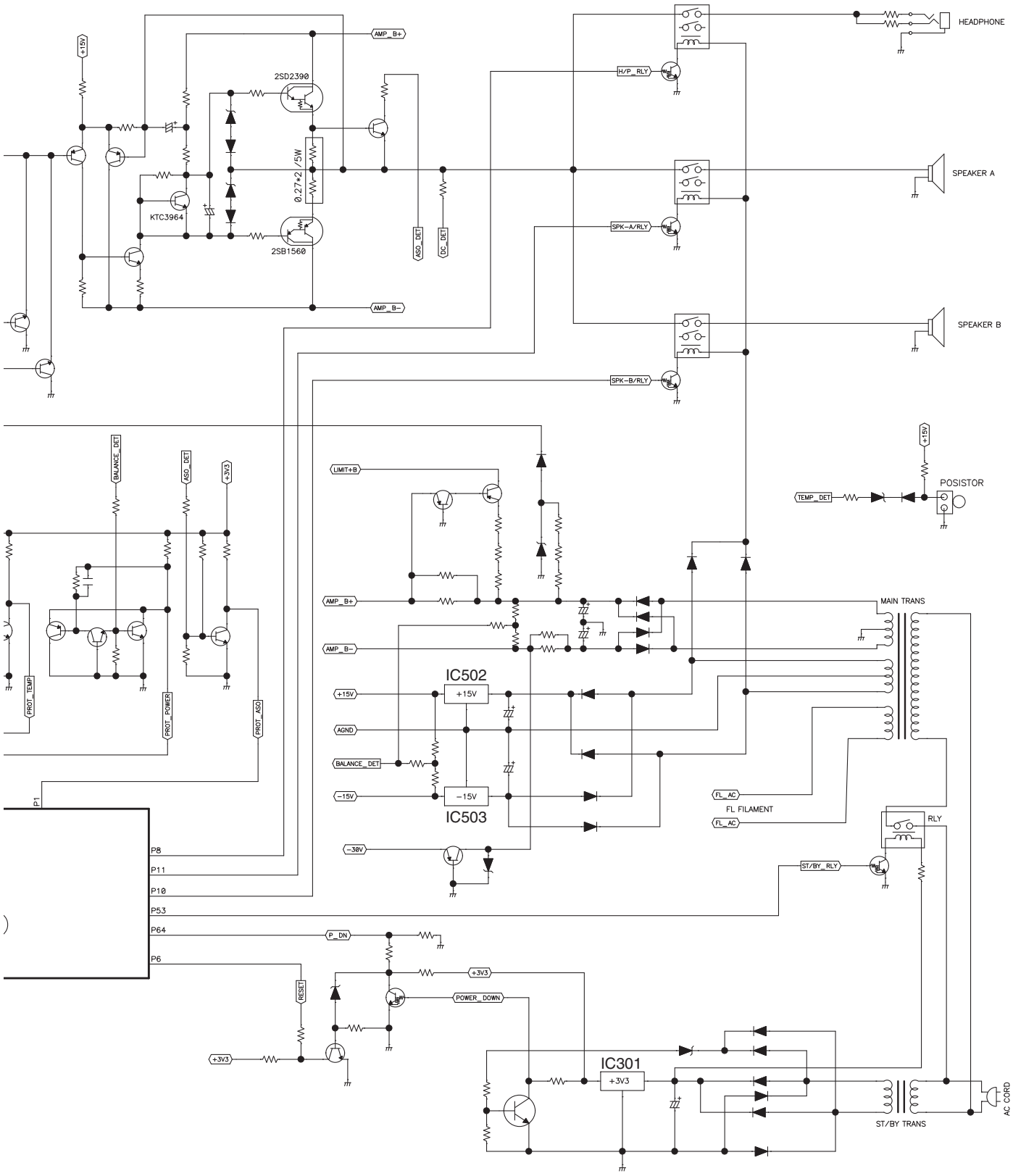
HEADPHONE
SPEAKER A
SPEAKER B
2SD2390
2SB1560
KTC3964
0.27+2 /5W
AMP_B+
AMP_B−
+15V
H/P_RLY
SPK−A/RLY
SPK−B/RLY
ASO_DET
DC_DET
BALANCE_DET
+3V3
PROT_TEMP
PROT_POWER
PROT_ASO
LIMIT+B
TEMP_DET
POSISTOR
MAIN TRANS
IC502
IC503
AGND
−15V
−30V
FL_AC
FL FILAMENT
RLY
ST/BY_RLY
P1
P8
P11
P10
P53
P64
P6
P_DN
RESET
POWER_DOWN
IC301
ST/BY TRANS
AC CORD

4.3 LEVEL and POWER SUPPLY BLOCK DIAGRAM

● LEVEL DIAGRAM

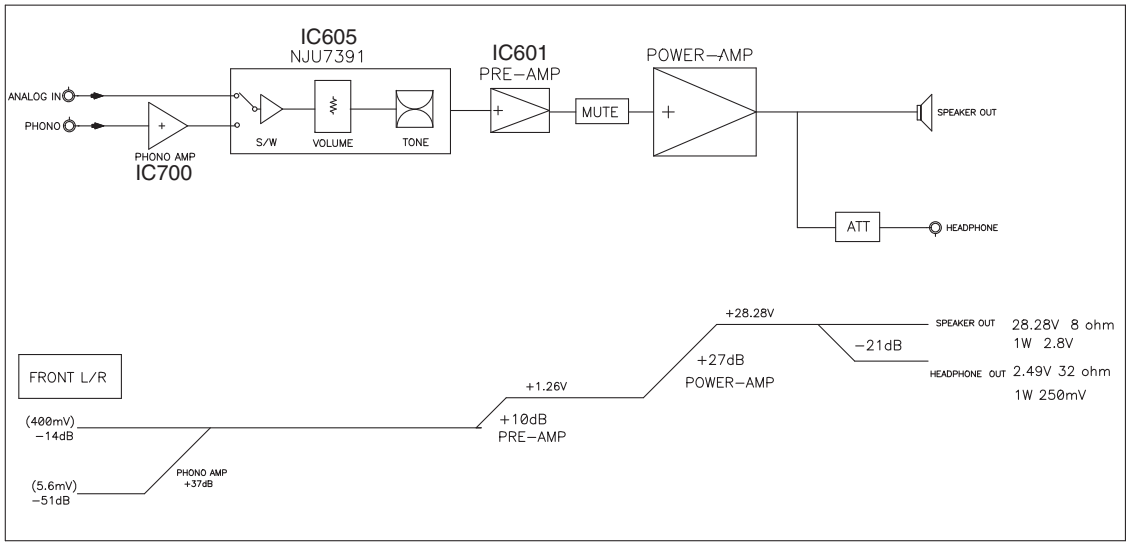

● POWER DIAGRA

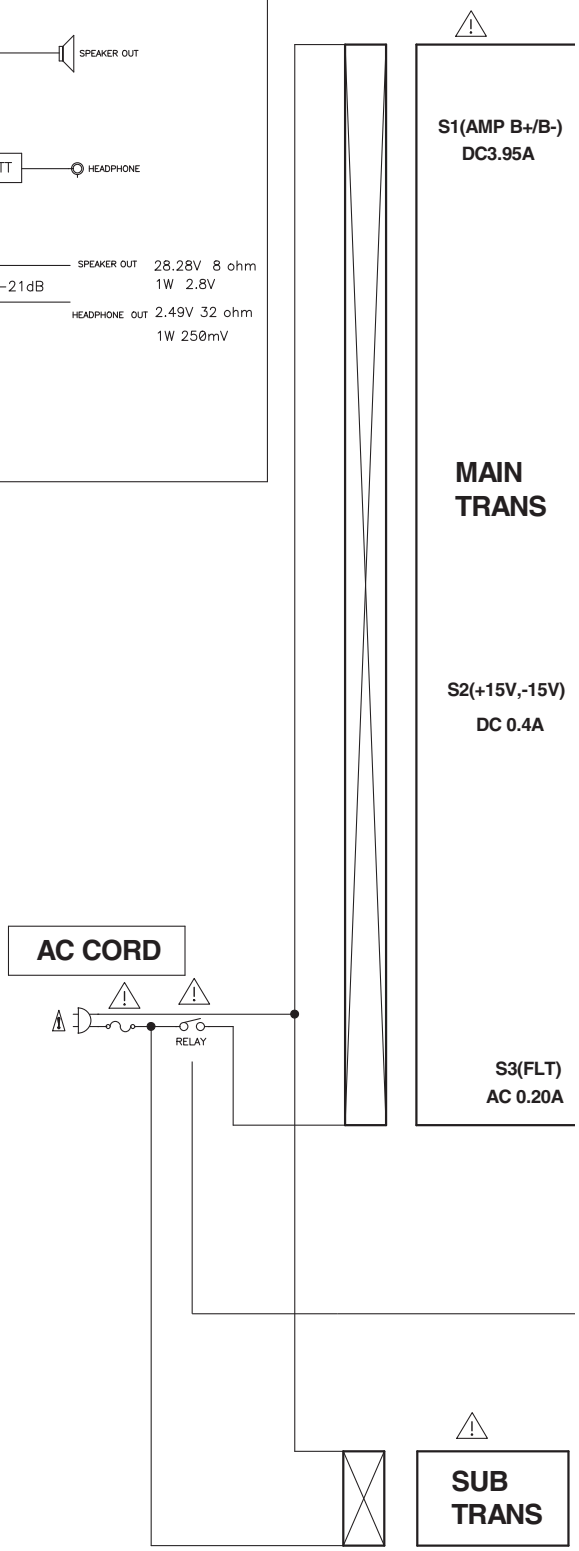

/ER DIAGRAM

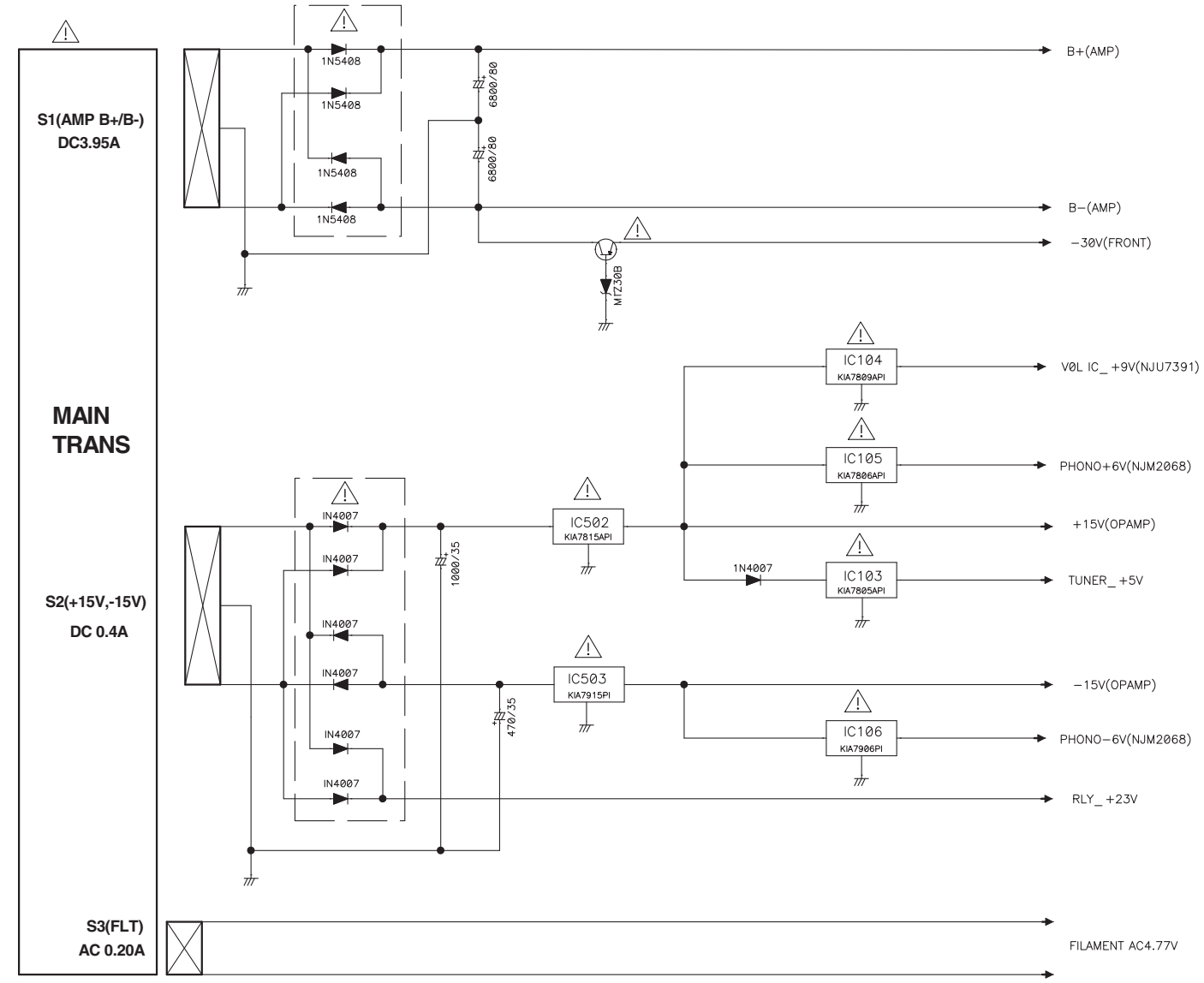
S1(AMP B+/B-)
DC3.95A
MAIN
TRANS
S2(+15V,-15V)
DC 0.4A
S3(FLT)
AC 0.20A
1N5408
6800/80
B+(AMP)
B−(AMP)
−30V(FRONT)
MTZ30B
IC104
KIA7809API
V0L IC_ +9V(NJU7391)
IC105
KIA7806API
PHONO+6V(NJM2068)
IN4007
1000/35
IC502
KIA7815API
+15V(OPAMP)
1N4007
IC103
KIA7805API
TUNER_ +5V
IC503
KIA7915PI
−15V(OPAMP)
470/35
IC106
KIA7906PI
PHONO−6V(NJM2068)
RLY_ +23V
FILAMENT AC4.77V

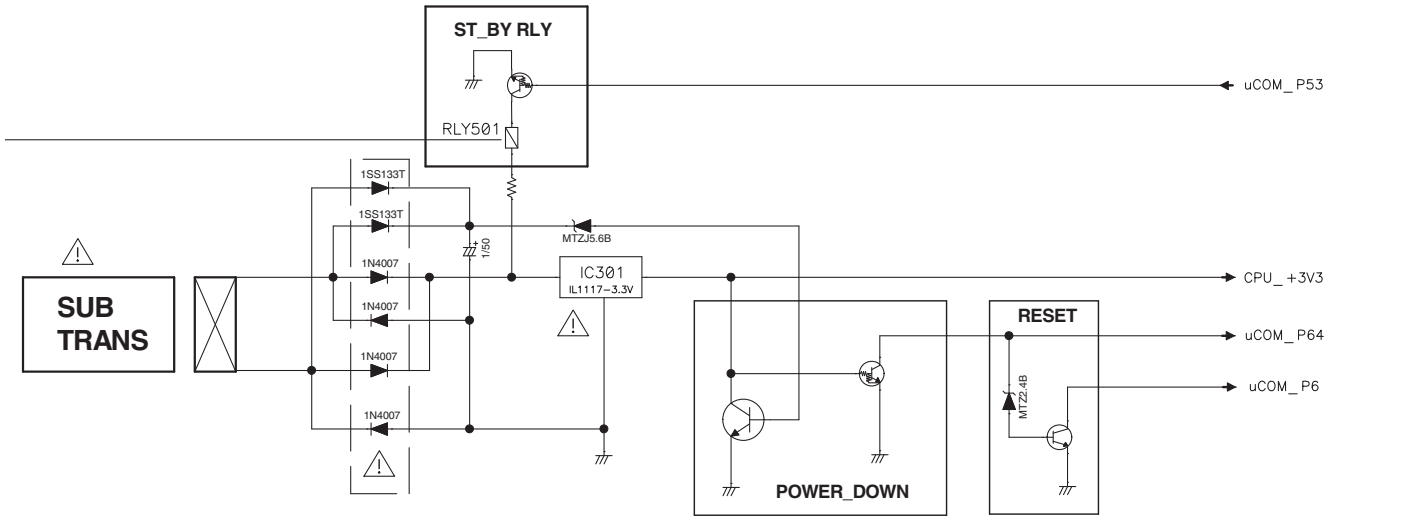
ST_BY RLY
RLY501
uCOM_ P53
1SS133T
1N4007
1/50
MTZJ5.6B
IC301
IL1117−3.3V
CPU_ +3V3
SUB
TRANS
RESET
uCOM_ P64
uCOM_ P6
MTZ2.4B
POWER_DOWN

4.4 GND MAP DIAGRAM

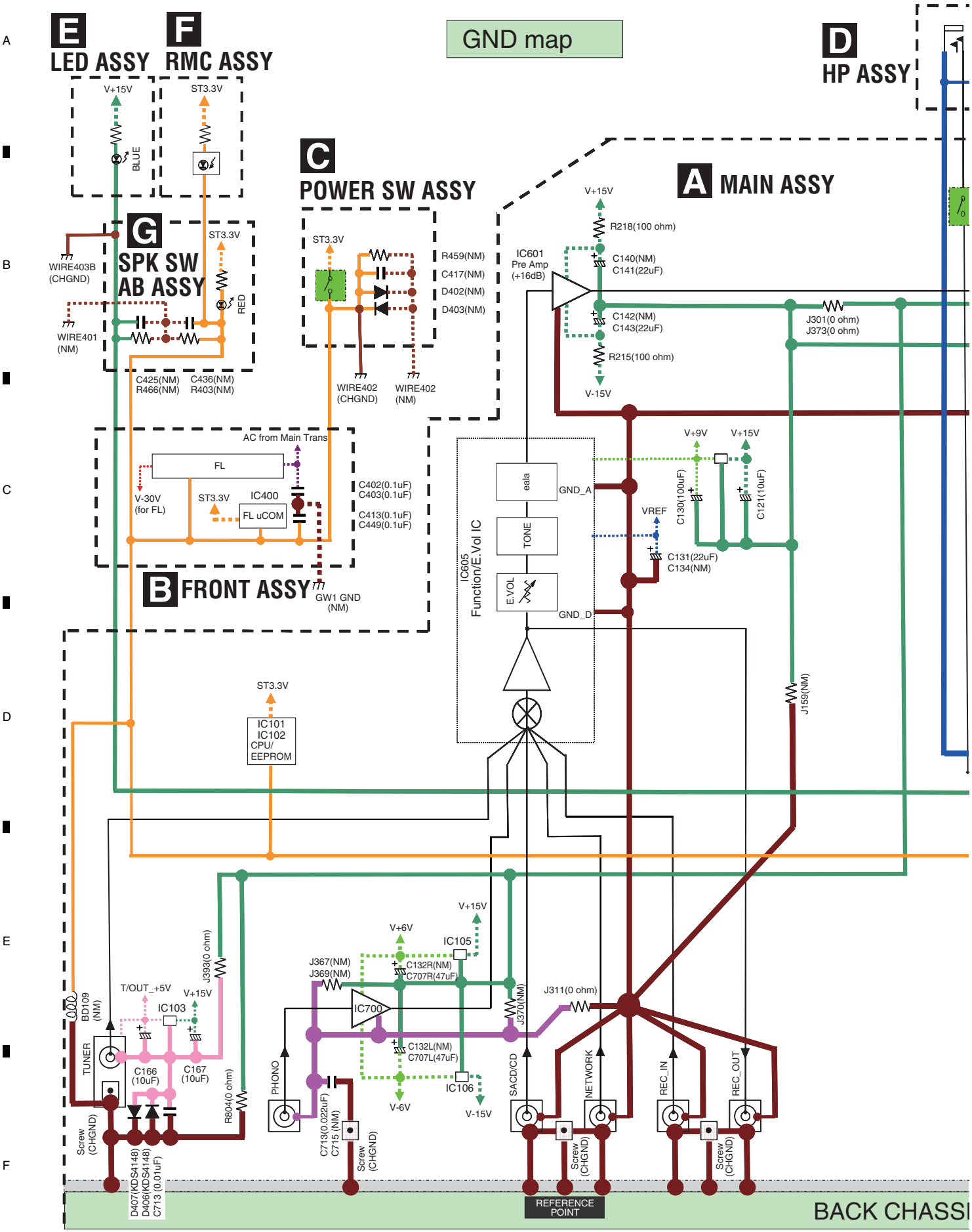

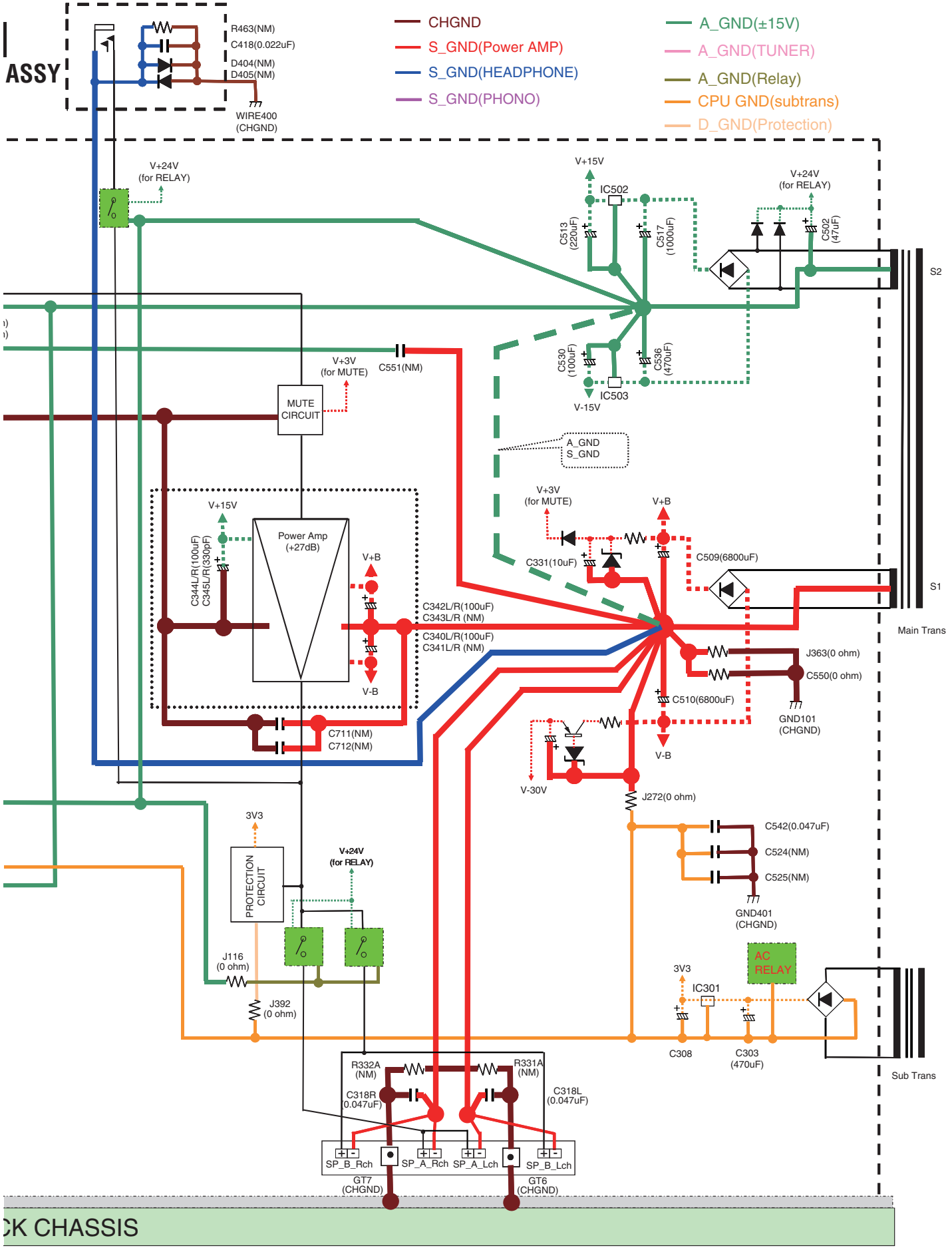
ASSY
R463(NM)
C418(0.022uF)
D404(NM)
D405(NM)
WIRE400
(CHGND)
CHGND
S_GND(Power AMP)
S_GND(HEADPHONE)
S_GND(PHONO)
A_GND(±15V)
A_GND(TUNER)
A_GND(Relay)
CPU GND(subtrans)
D_GND(Protection)
V+24V
(for RELAY)
V+15V
IC502
C513
(220uF)
C517
(1000uF)
C502
(47uF)
S2
C530
(100uF)
C536
(470uF)
IC503
V-15V
V+3V
(for MUTE)
C551(NM)
MUTE
CIRCUIT
A_GND
S_GND
Power Amp
(+27dB)
C344L/R(100uF)
C345L/R(330pF)
V+B
V-B
C342L/R(100uF)
C343L/R (NM)
C340L/R(100uF)
C341L/R (NM)
C711(NM)
C712(NM)
C331(10uF)
C509(6800uF)
S1
Main Trans
J363(0 ohm)
C550(0 ohm)
GND101
(CHGND)
C510(6800uF)
V-30V
J272(0 ohm)
C542(0.047uF)
C524(NM)
C525(NM)
GND401
(CHGND)
3V3
PROTECTION
CIRCUIT
J116
(0 ohm)
J392
(0 ohm)
AC
RELAY
IC301
C308
C303
(470uF)
Sub Trans
R332A
(NM)
R331A
(NM)
C318R
(0.047uF)
C318L
(0.047uF)
SP_B_Rch
SP_A_Rch
SP_A_Lch
SP_B_Lch
GT7
(CHGND)
GT6
(CHGND)

CK CHASSIS

5. DIAGNOSIS
5.1 TROUBLESHOOTING

Speaker_A No sound

[Product state]
- Power cord connection (230 V/50 Hz)
- Unit POWER SW: ON
- Power ON operation by remote control
- SPEAKER-A selection
- INPUT: SACD/CD

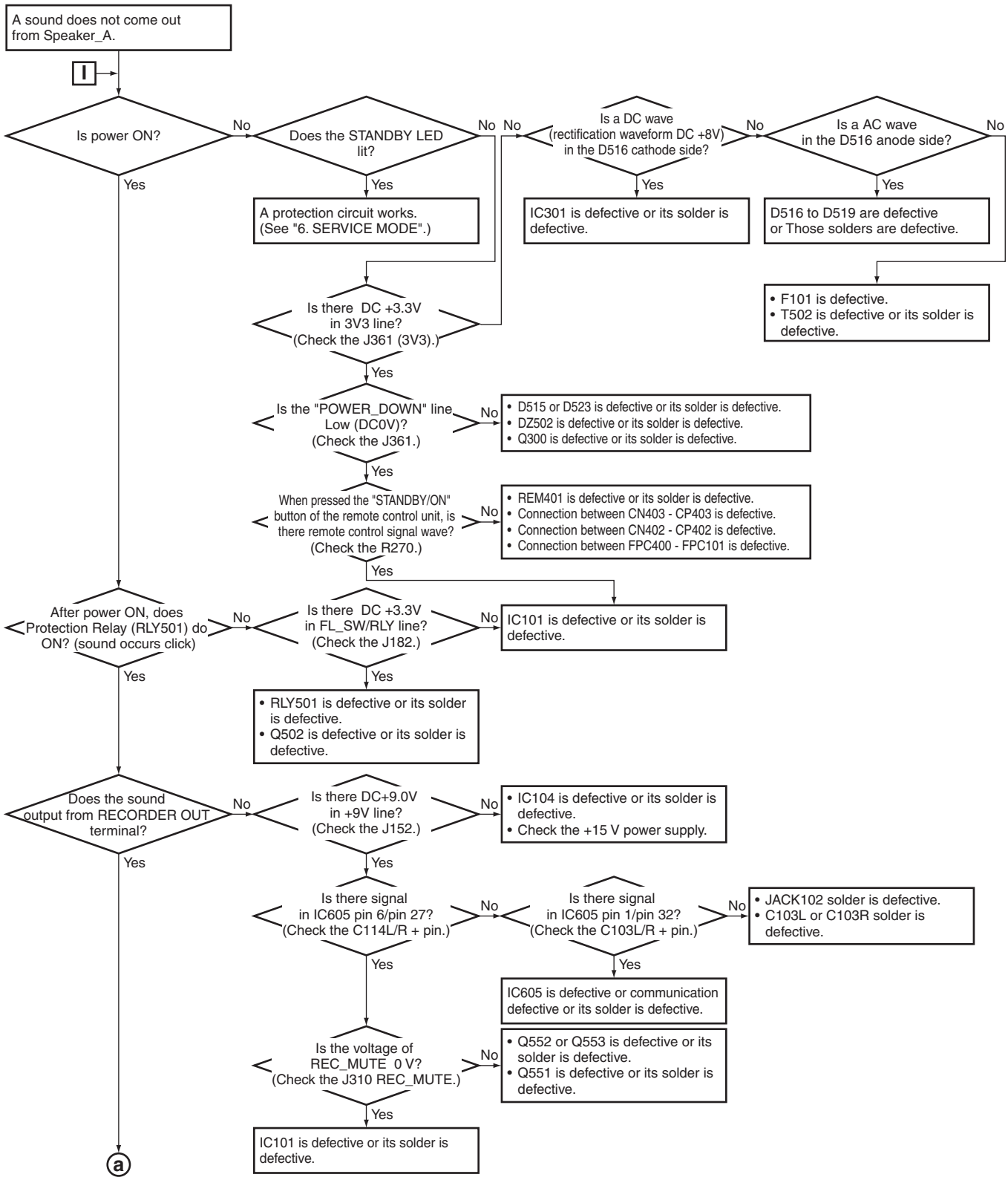

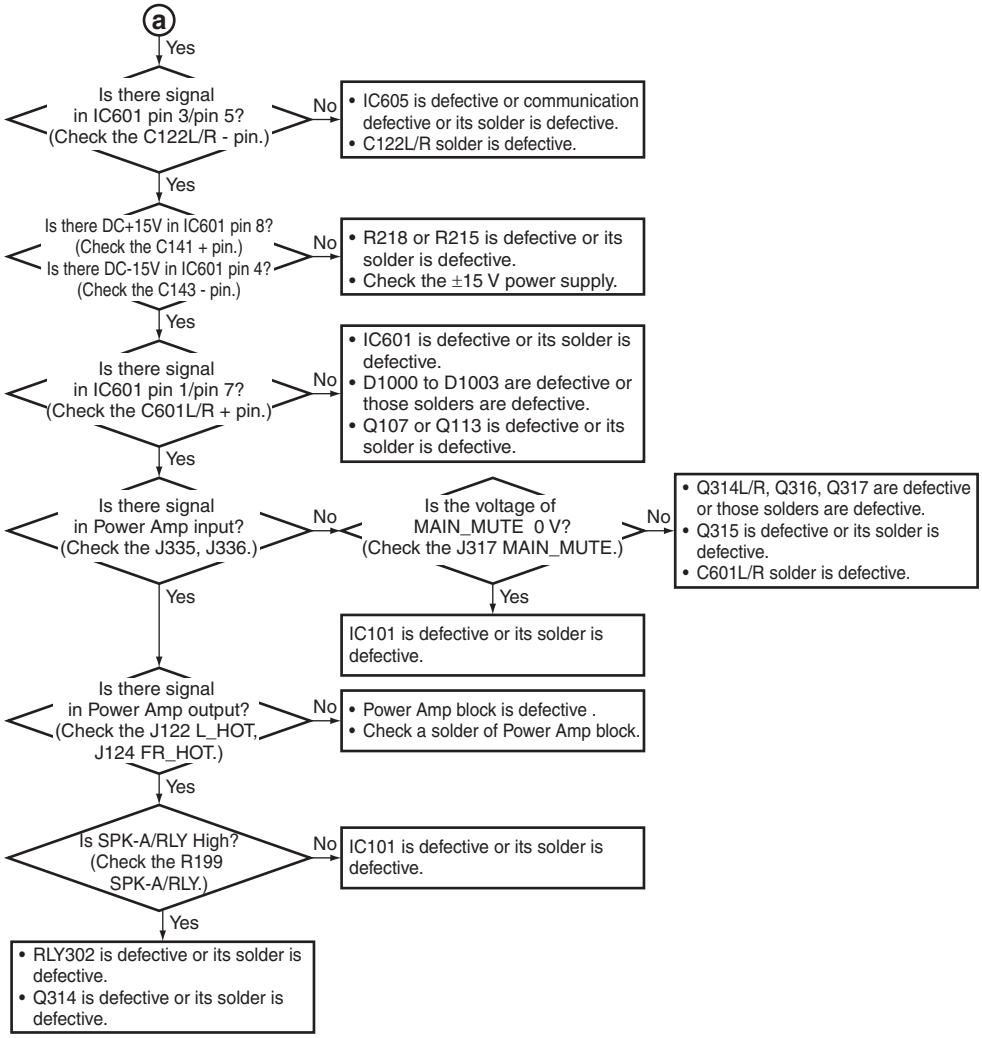

Speaker_B No sound

[Product state]
- Power cord connection (230 V/50 Hz)
- Unit POWER SW: ON
- Power ON operation by remote control
- SPEAKER-B selection
- INPUT: SACD/CD

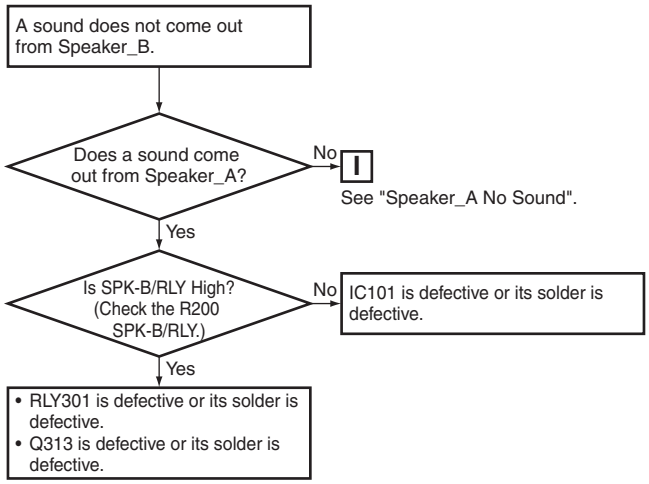

Phones No sound

[Product state]
- Power cord connection (230 V/50 Hz)
- Unit POWER SW: ON
- Power ON operation by remote control
- INPUT: SACD/CD

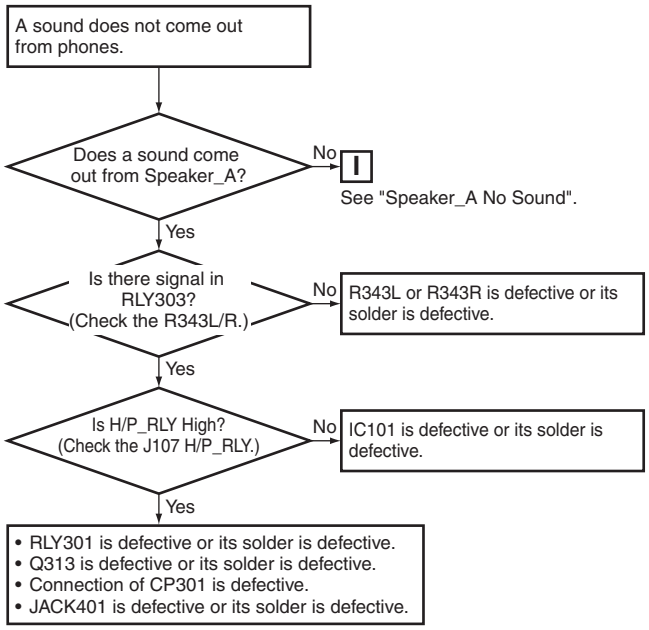

NETWORK No sound

[Product state]
- Power cord connection (230 V/50 Hz)
- Unit POWER SW: ON
- Power ON operation by remote control
- SPEAKER-A selection
- INPUT: NETWORK

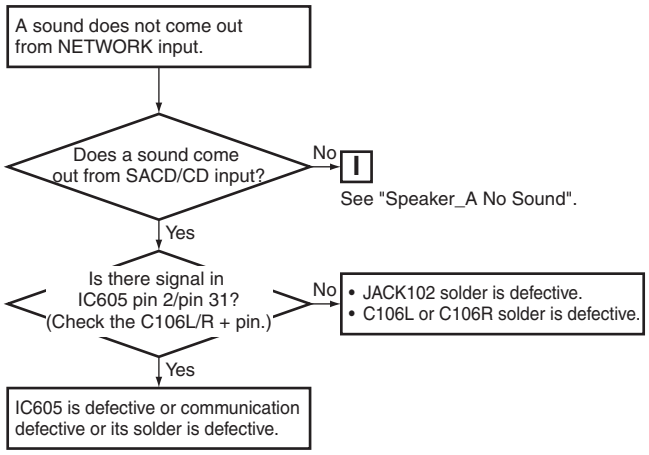

RECODER IN No sound

[Product state]
- Power cord connection (230 V/50 Hz)
- Unit POWER SW: ON
- Power ON operation by remote control
- SPEAKER-A selection
- INPUT: RECODER IN

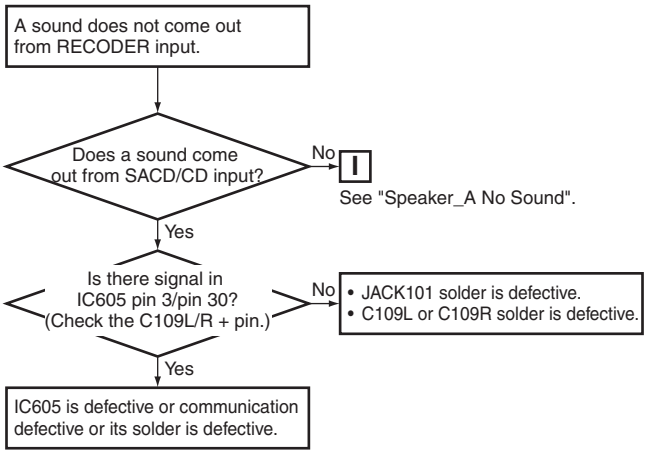

PHONO No sound

[Product state]
- Power cord connection (230 V/50 Hz)
- Unit POWER SW: ON
- Power ON operation by remote control
- SPEAKER-A selection
- INPUT: PHONO

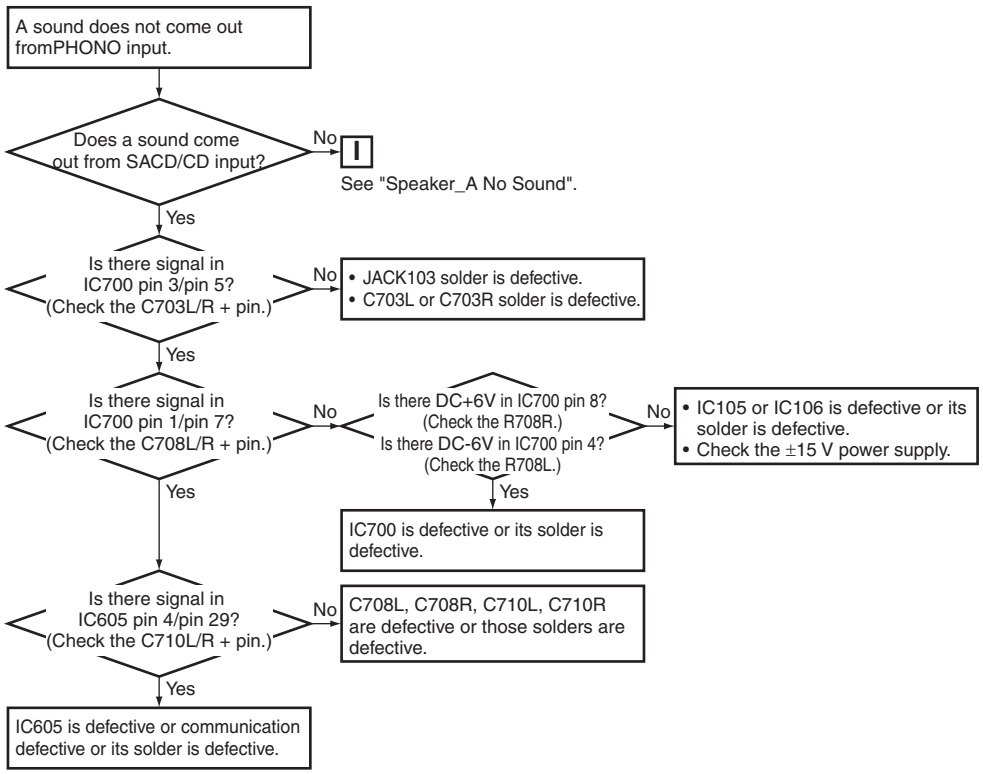

TUNER No sound

[Product state]
- Power cord connection (230 V/50 Hz)
- Unit POWER SW: ON
- Power ON operation by remote control
- SPEAKER-A selection
- INPUT: TUNER (FM/AM)
- Tuner setting: FM

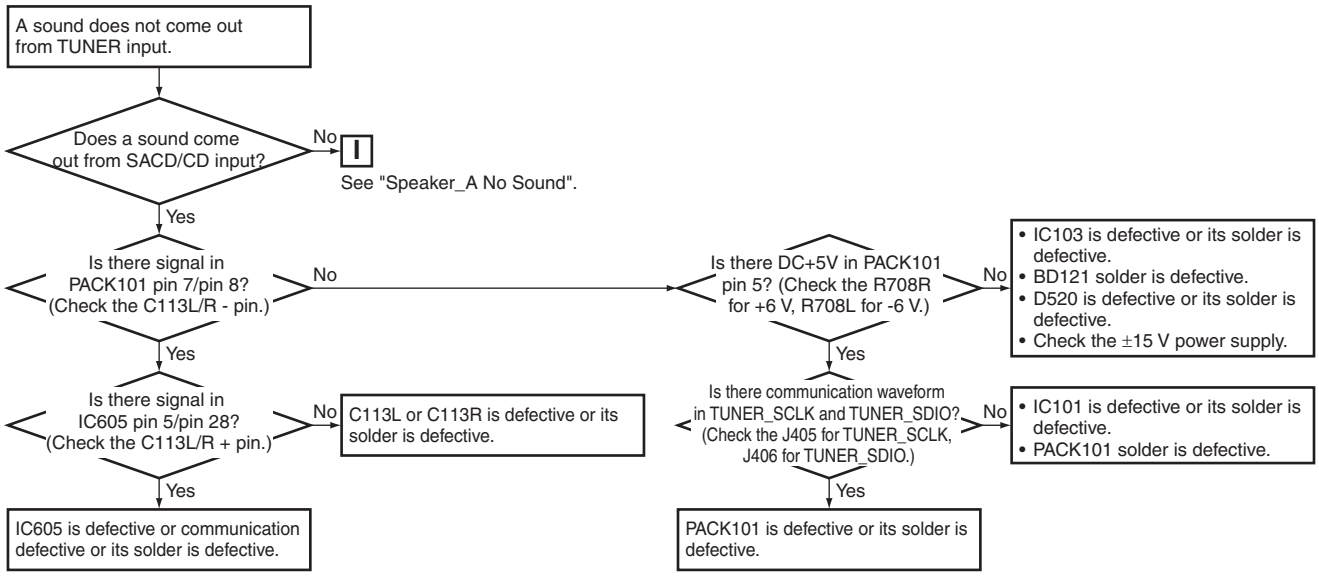

FL No light

[Product state]
- Power cord connection (230 V/50 Hz)
- Unit POWER SW: ON
- Power ON operation by remote control
- SPEAKER-A selection
- INPUT: SACD/CD

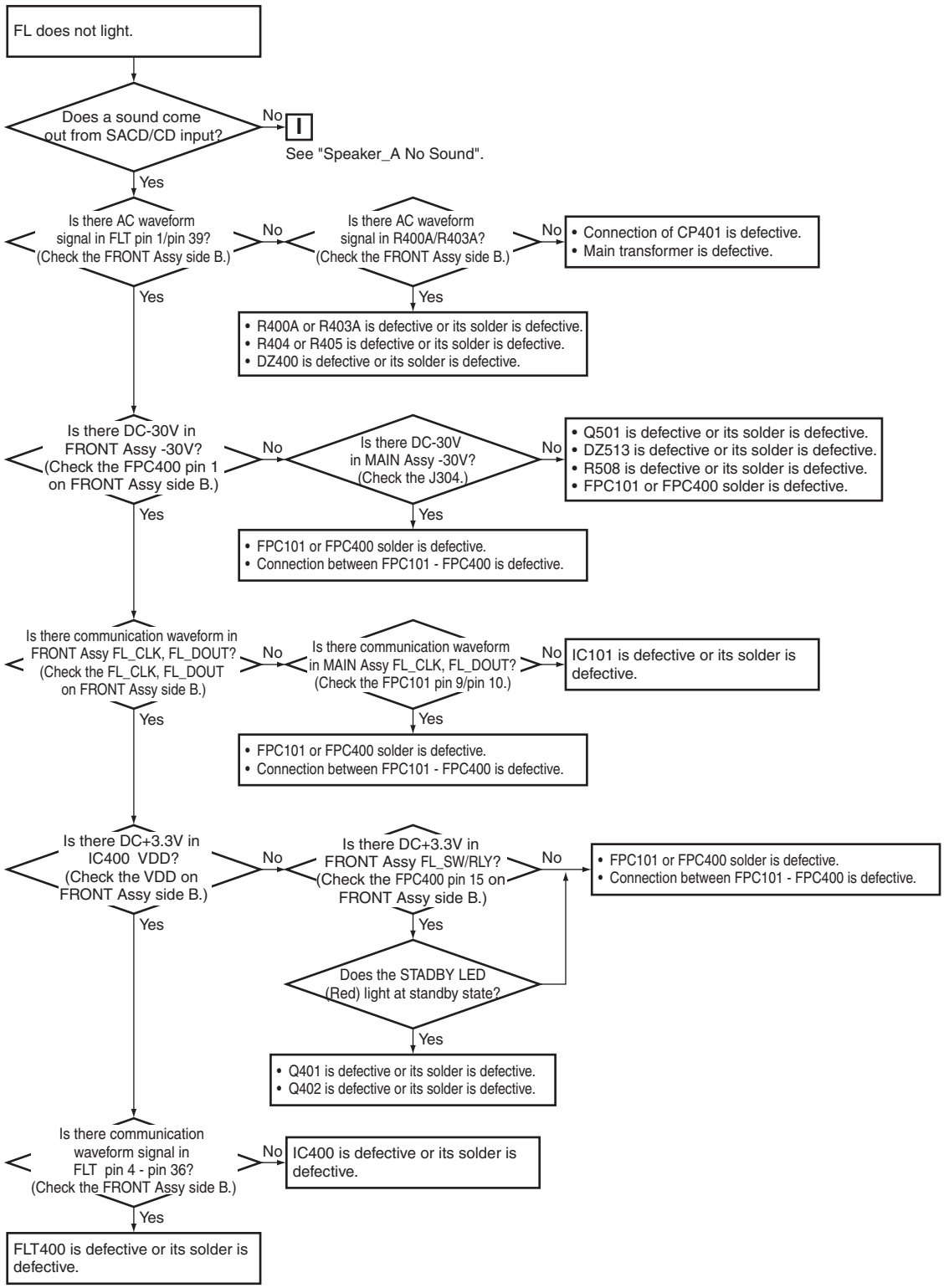

Remote control unit does not work.

[Product state]
- Power cord connection (230 V/50 Hz)
- Unit POWER SW: ON
- Power ON operation by remote control
- SPEAKER-A selection
- INPUT: SACD/CD

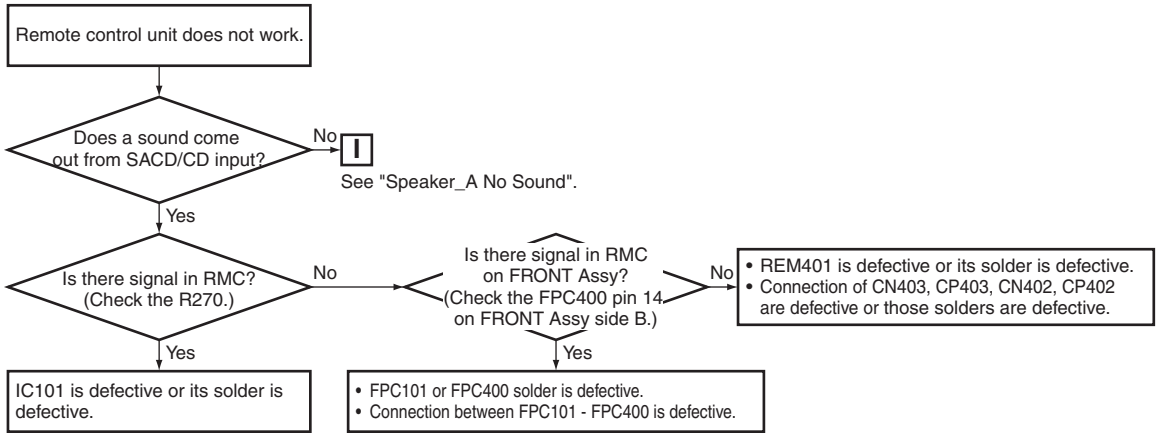

5.2 DETECTION CIRCUIT

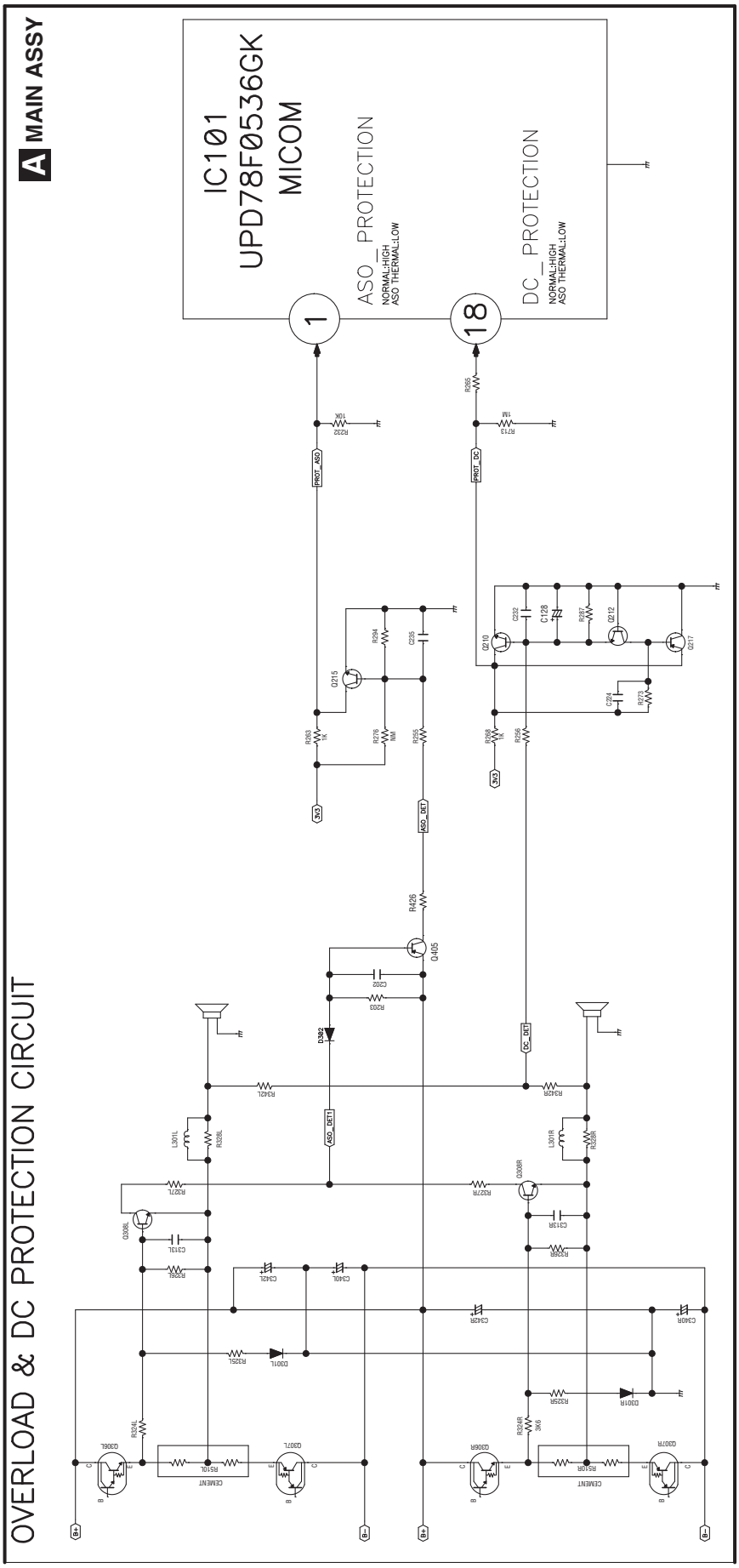

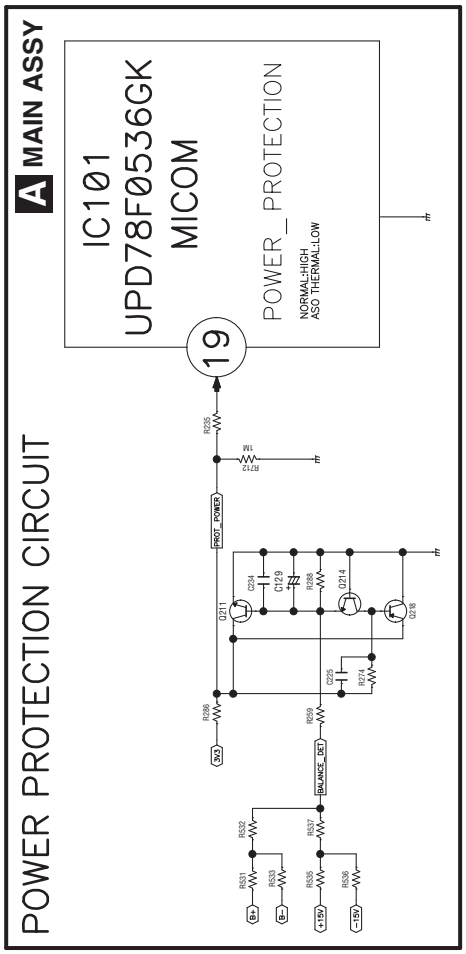

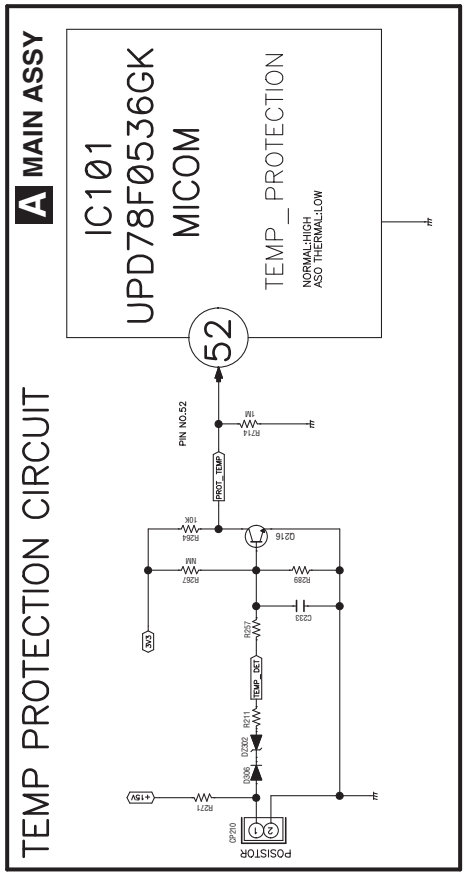

5.3 IC INFORMATION

■ J020780536000-IL (MAIN ASSY : IC101)

UPD78F0536_Main u COM

• Pin Arrangement (Top view)

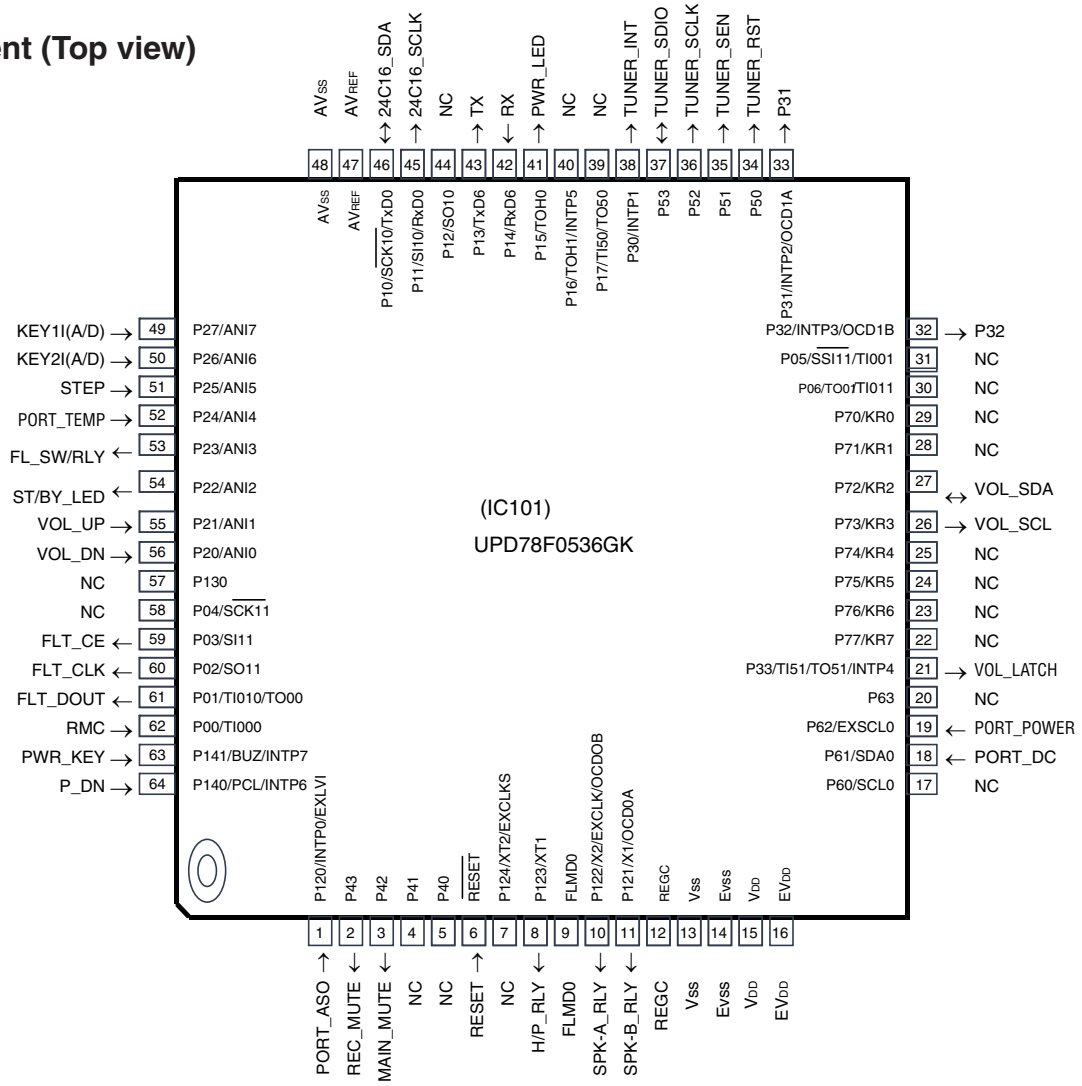

• Pin Function

Pin No.	Symbol	I/O	Description
1	PORT_ASO	I	ASO Protection detection signal input pin
2	REC_MUTE	O	Output for RECORDER mute cotrol pin
3	MAIN_MUTE	O	Output for MAIN mute cotrol pin
4	NC	-	NOT USED
5	NC	-	NOT USED
6	RESET	I	Micom reset signal Input pin
7	NC	-	NOT USED
8	H/P_RLY	O	H/P_RLY output Relay control pin
9	FLMD0	-	UPGRADE Mode Pin
10	SPK-A_RLY	O	SPK-A_RLY speaker output Relay control pin
11	SPK-B_RLY	O	SPK-B_RLY speaker output Relay control pin
12	REGC	-	Regulator Capacitance (0.47UF)
13	Vss	-	Ground
14	Evss	-	Ground
15	VDD	-	+3.3V power supply
16	EVDD	-	+3.3V power supply

Pin No.	Symbol	I/O	Description
17	NC	-	NOT USED
18	PORT_DC	I	DC Protection detection signal input pin
19	PORT_POWER	I	POWER Protection detection signal input pin
20	NC	-	NOT USED
21	VOL_LATCH	O	LATCH signal output for NJU7391
22	NC	-	NOT USED
23	NC	-	NOT USED
24	NC	-	NOT USED
25	NC	-	NOT USED
26	VOL_SCL	O	CLK signal output for NJU7391
27	VOL_SDA	I/O	Data signal output for NJU7391
28	NC	-	NOT USED
29	NC	-	NOT USED
30	NC	-	NOT USED
31	NC	-	NOT USED
32	P32	O	SOFTWARE Debuffing Mode
33	P31	O	SOFTWARE Debuffing Mode
34	TUNER_RST	O	Output to reset Tuner Pack
35	TUNER_SEN	O	Output for Tuner Pack Serial Enable Input
36	TUNER_SCLK	O	Clock signal output for Tuner Pack
37	TUNER_SDIO	I/O	Data signal input & output for Tuner Pack
38	TUNER_INT	I	Tuner Interrupt signal input pin
39	NC	-	NOT USED
40	NC	-	NOT USED
41	PWR_LED	O	Power LED control signal
42	RX	I	UPGRADE Mode Pin
43	TX	O	UPGRADE Mode Pin
44	NC	-	NOT USED
45	24C16_SCLK	O	Clock signal output for data backup of main CPU
46	24C16_SDA	I/O	Data signal input & output for data backup of main CPU
47	AV_{REF}	-	+3.3V power supply
48	AV_{SS}	-	Ground
49	KEY1	I(A/D)	Data input for Key1 port
50	KEY2	I(A/D)	Data input for Key2 port
51	STEP	I	TUNER STEP Mode Pin
52	PORT_TEMP	I	Posistor Protection detection signal input pin
53	FL_SW/RLY	O	Output for chip switching of SC16315 and Output to ST-BY Relay ON/OFF
54	ST/BY_LED	O	ST/BY LED control signal
55	VOL_UP	I	Data input for VOLUME encoder
56	VOL_DN	I	Data input for VOLUME encoder
57	NC	-	NOT USED
58	NC	-	NOT USED
59	FLT_CE	O	Output for chip enable of SC16315
60	FLT_CLK	O	Output for chip CLK of SC16315
61	FLT_DOUT	O	Output for chip DATA of SC16315
62	RMC	I	Remote control signal input pin
63	PWR_KEY	I	Data input for PWR_Key scan
64	P_DN	I	power down signal input port

■ E903104100780-IL (MAIN ASSY : PACK101)

TUNER Pack

• Pin Arrangement (Side view)

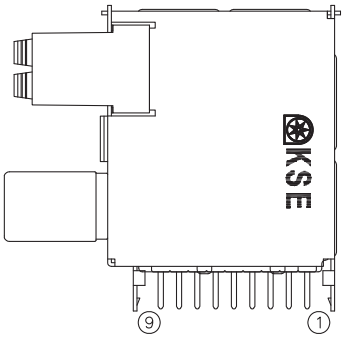

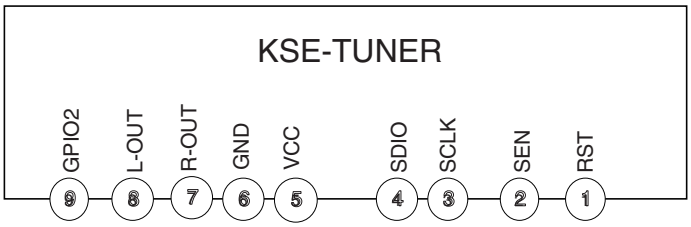

• Pin Function

Pin NO	Pin Name	Description
1	/RST	Device reset (active low) input.
2	/SEN	Serial enable input (active low). used as device select in 3-wire and SPI operation and address selection in 2-wire operation
3	SCLK	Serial Clock input
4	SDIO	Serial data input/output.
5	VCC	Tuner Vcc +5.0[V] DC / 50 mA max
6	GND	GND
7	R-OUT	Right audio line output in analog output mode.
8	L-OUT	Left audio line output in analog output mode.
9	GPIO2	General purpose output or interrupt pin.

• Schematic Diagram

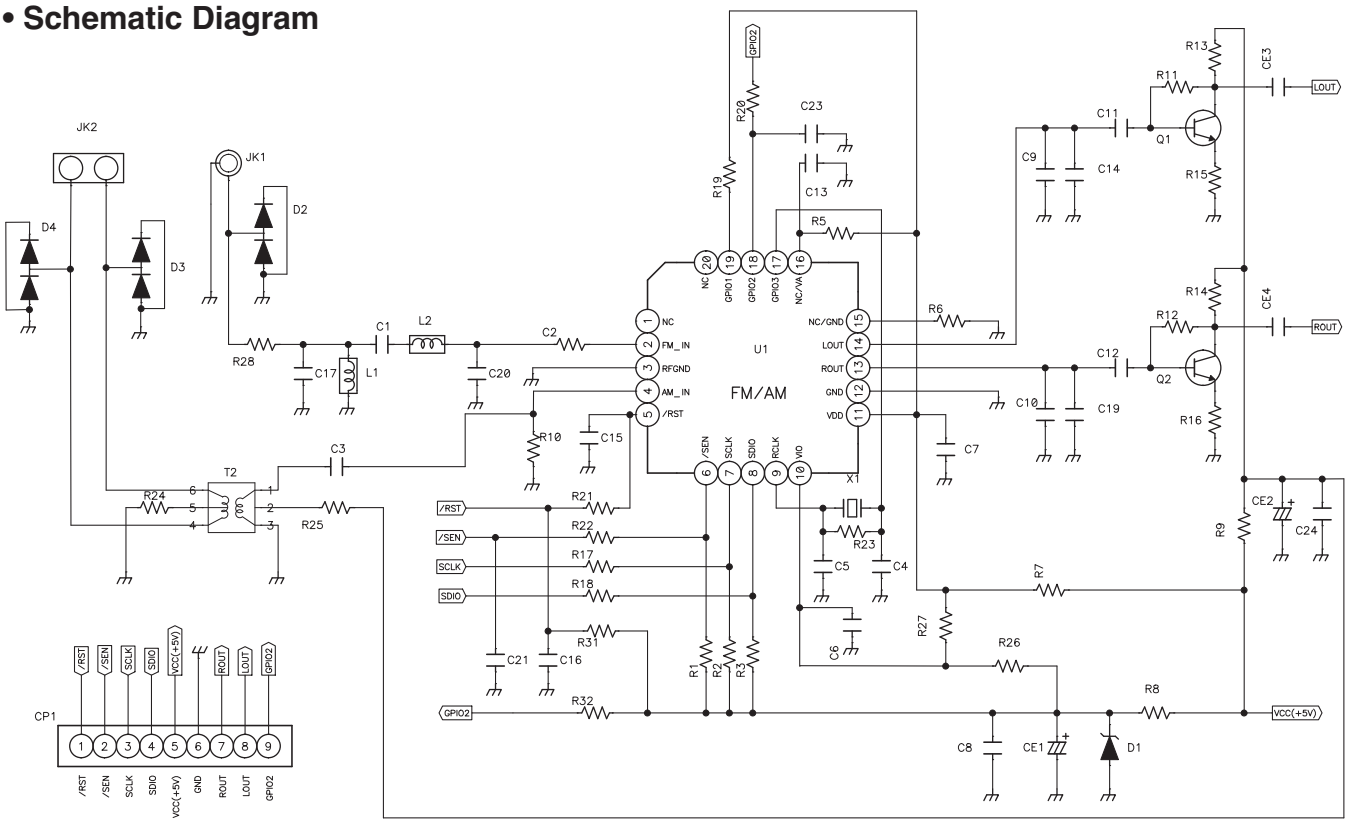

■ J000241600170-IL (MAIN ASSY : IC102)

CW24Cxx_EEPROM

• Pin Arrangement (Top view)

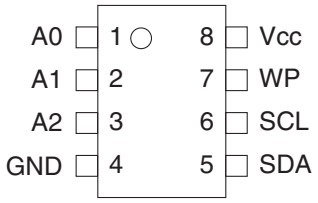

• Block Diagram

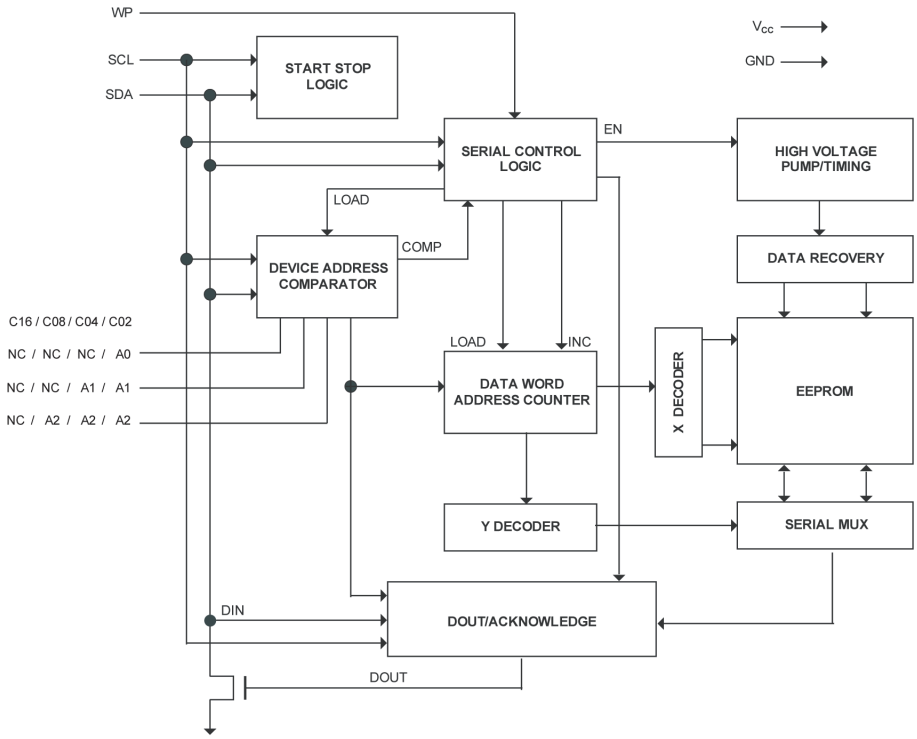

• Pin Function

No.	Name	Function Description
1	A0	Address input. The A2, A1 and A0 pins are device address inputs. The CW24C02 uses the A2, A1 and A0 inputs for hard wire addressing and a total of eight CW24C02 devices may be addressed on a single bus system (device addressing is discussed in detail under the Device Addressing section). The CW24C04 uses the A2 and A1 inputs for hard wire addressing and a total of four CW24C04 devices may be addressed on a single bus system. The A0 pin is a no connect and can be connected to GND. The CW24C08 only uses the A2 input for hardwire addressing and a total of two CW24C08 devices may be addressed on a single bus system. The A0 and A1 pins are no connects and can be connected to GND. The CW24C16 does not use the device address pins, which limits the number of devices on a single bus to one. The A0, A1 and A2 pins are no connects and can be connected to GND.
2	A1	
3	A2	
5	SDA	Serial address and data I/O. The SDA pin is bi-directional for serial data transfer. It is an open-drain pin, therefore the SDA bus requires a pull-up resistor to V_{CC} (typical 10 kΩ).
6	SCL	Serial clock input. The SCL input is used to synchronize the data transfer to and from each EEPROM device. It's positive edge clock data into the device and negative edge clock data out of the device.
7	WP	Write protect. The WP pin that provides hardware data protection. The WP pin allows normal read/write operations when connected to ground (GND). When the WP pin is connected to V_{CC}, the write protection feature is enabled and read only.
4	GND	Circuit ground pin.
8	V_{CC}	Positive supply voltage.

■ J040739100010-IL (MAIN ASSY : IC605)

NJU7391A_Vol IC

• Pin Arrangement (Top view)

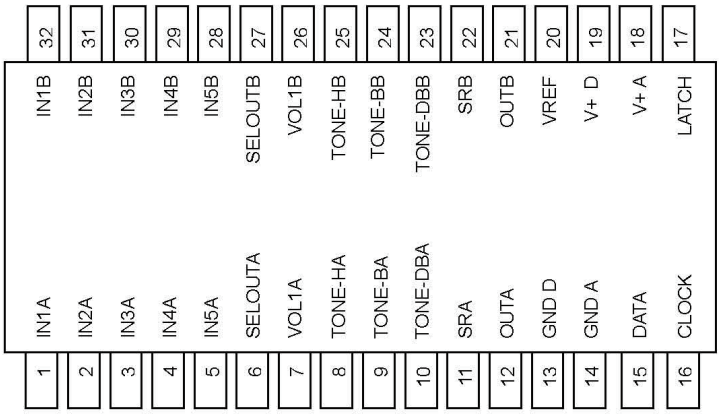

• Block Diagram

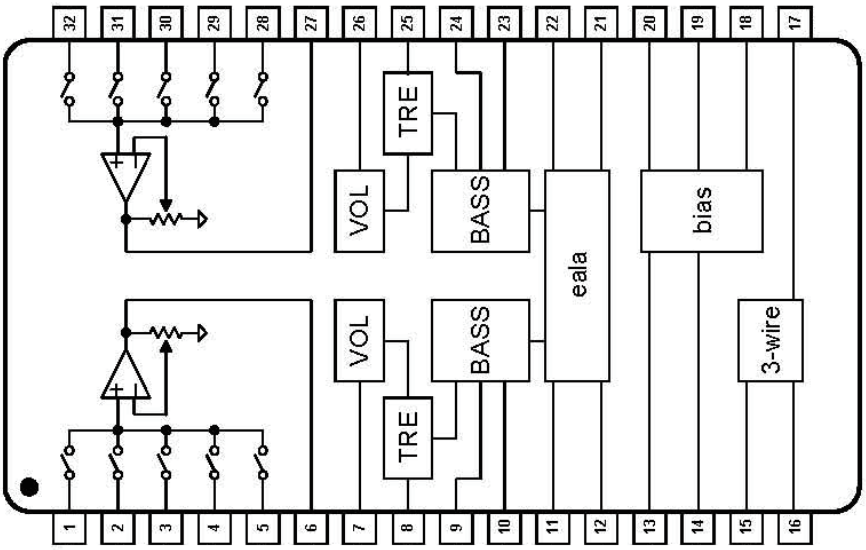

• Pin Function

No.	Symbol	Function	No	Symbol	Function
1	IN1A	Ach Input1 Terminal	17	LATCH	3-Wired LATCH Input Terminal
2	IN2A	Ach Input2 Terminal	18	V+ A	Analog Supply Terminal
3	IN3A	Ach Input3 Terminal	19	V+ D	Digital Supply Terminal
4	IN4A	Ach Input4 Terminal	20	VREF	Reference Voltage Terminal
5	IN5A	Ach Input5 Terminal	21	OUTB	Bch Output Terminal
6	SELOUTA	Ach Selector Output Terminal	22	SRB	Bch Surround Filter Terminal
7	VOL1A	Ach Volume Input Terminal	23	TONE-DBB	Bch Bass(Tone) Filter Terminal
8	TONE-HA	Ach Treble(Tone) Filter Terminal	24	TONE-BB	Bch Bass(Tone) Filter Terminal
9	TONE-BA	Ach Bass(Tone) Filter Terminal	25	TONE-HB	Bch Treble(Tone) Filter Terminal
10	TONE-DBA	Ach Bass(Tone) Filter Terminal	26	VOL1B	Bch Volume Input Terminal
11	SRA	Ach Surround Filter Terminal	27	SELOUTB	Bch Selector Output Terminal
12	OUTA	Ach Output Terminal	28	IN5B	Bch Input5 Terminal
13	GND D	Digital Ground Terminal	29	IN4B	Bch Input4 Terminal
14	GND A	Analog Ground Terminal	30	IN3B	Bch Input3 Terminal
15	DATA	3-Wired DATA Input Terminal	31	IN2B	Bch Input2 Terminal
16	CLOCK	3-Wired CLOCK Input Terminal	32	IN1B	Bch Input1 Terminal

J126111700041-IL (MAIN ASSY : IC301)

IL1117_3.3V Regulator

• Pin Arrangement

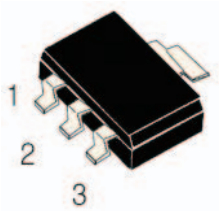

Pin#2 connected with heatsink

1. ADJ/GND
2. Output
3. Input

• Block Diagram

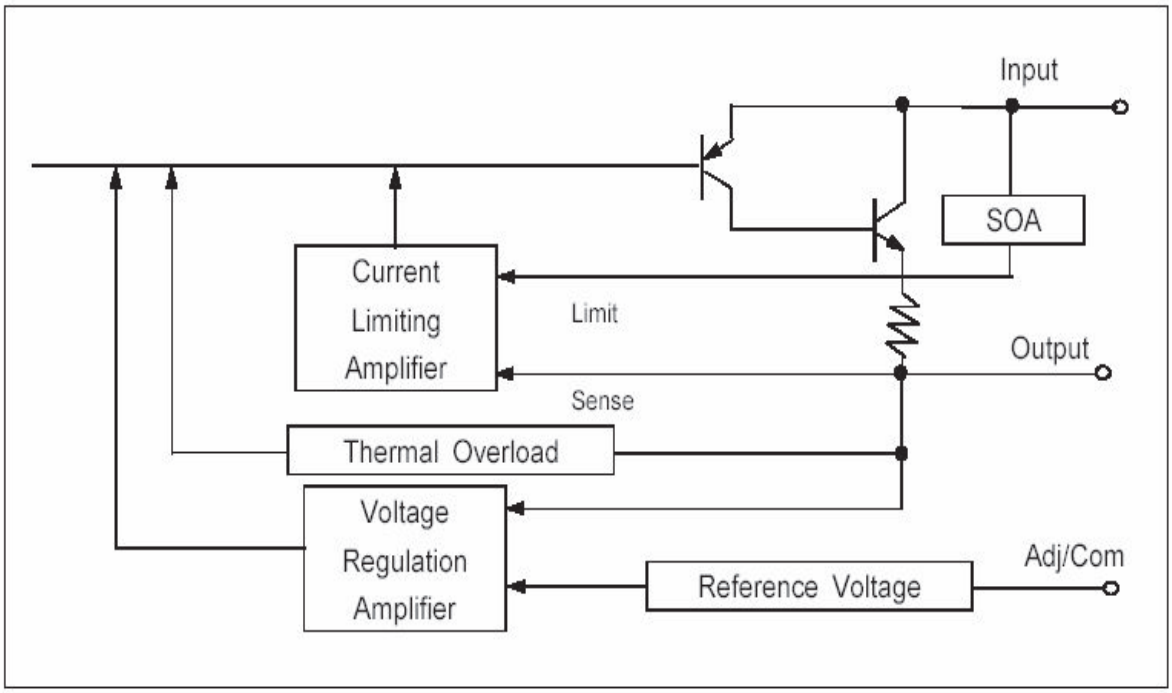

■ J126780500110-IL (MAIN ASSY : IC103)

KIA7805API_+5V Regulator

■ J126780600130-IL (MAIN ASSY : IC105)

KIA7806API_+6V Regulator

■ J126780900020-IL (MAIN ASSY : IC104)

KIA7809API_+9V Regulator

■ J126781500000-IL (MAIN ASSY : IC502)

KIA7815API_+15V Regulator

ITEM	OUTPUT VOLTAGE (Typ.)
KIA7805API	5
KIA7806API	6
KIA7809API	9
KIA7815API	15

• Pin Arrangement

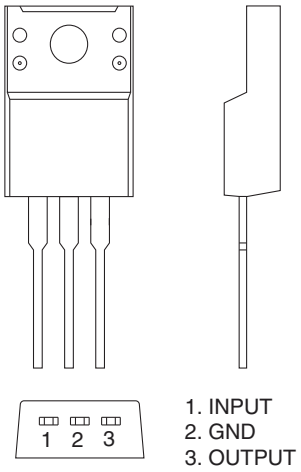

• Block Diagram

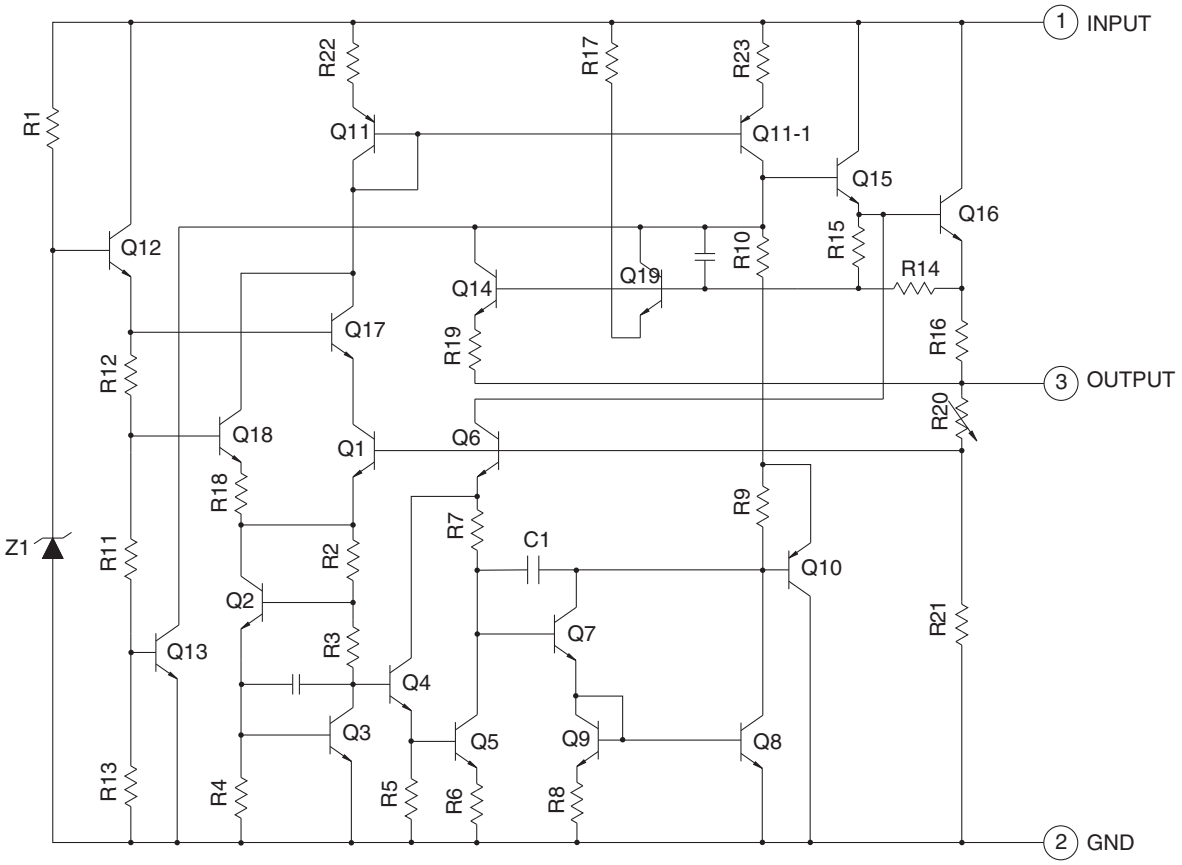

■ J126790600030-IL (MAIN ASSY : IC106)

KIA7906PI_-6V Regulator

■ J126791500030-IL (MAIN ASSY : IC503)

KIA7915PI_-15V Regulator

ITEM	OUTPUT VOLTAGE (Typ.)
KIA7906PI	-6
KIA7915PI	-15

• Pin Arrangement

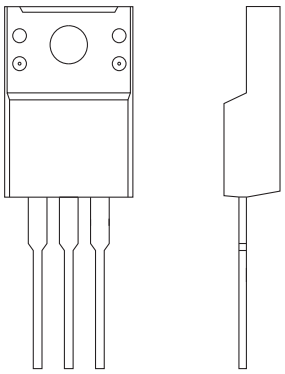

1. GND
2. INPUT
3. OUTPUT

• Block Diagram

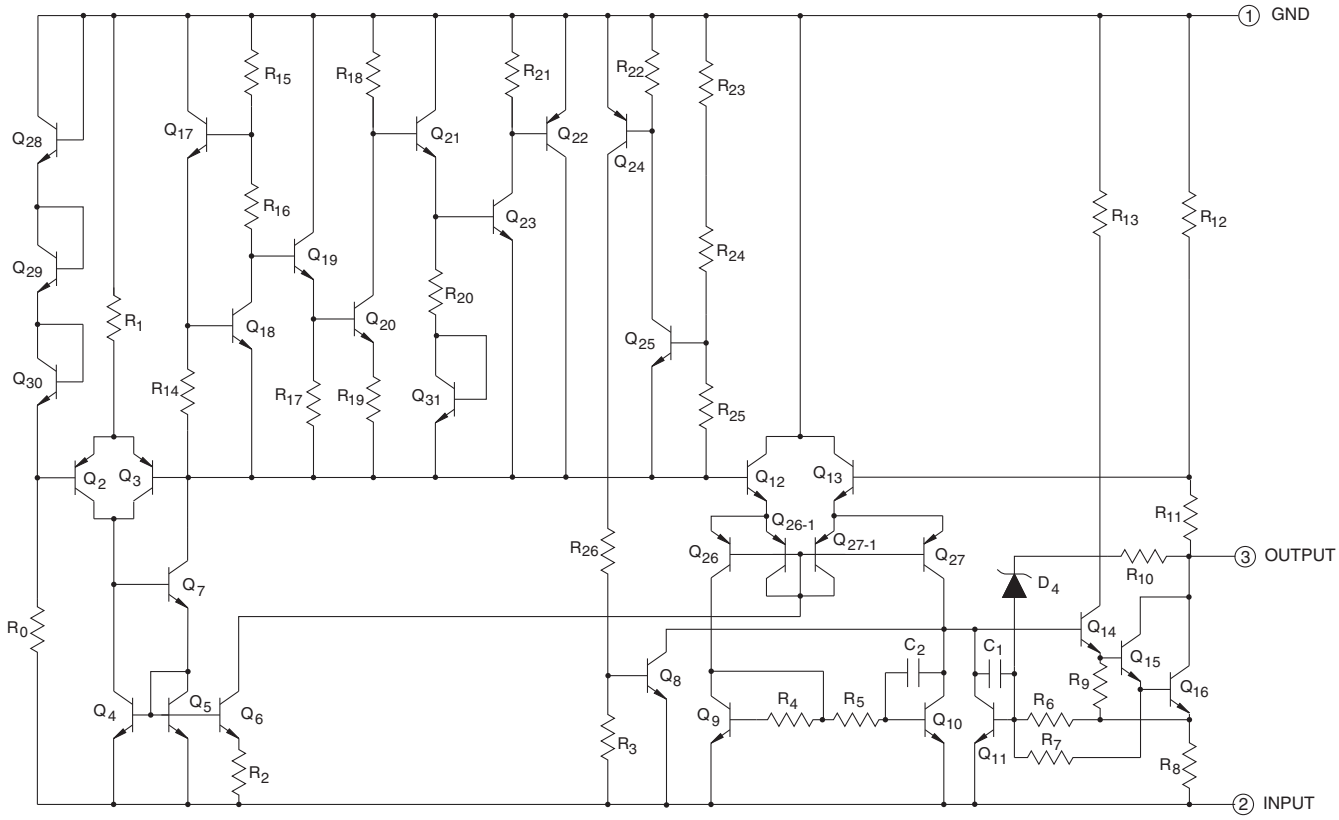

■ J127163150010-IL (FRONT ASSY : IC400)

SC16315_VFD DRIVER CONTROLLER IC

• Pin Arrangement (Top view)

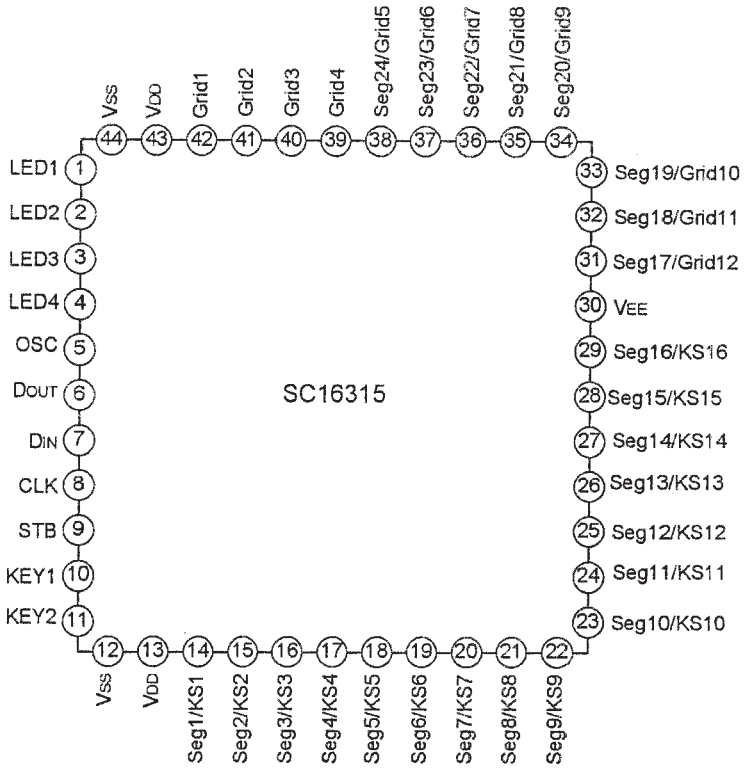

• Block Diagram

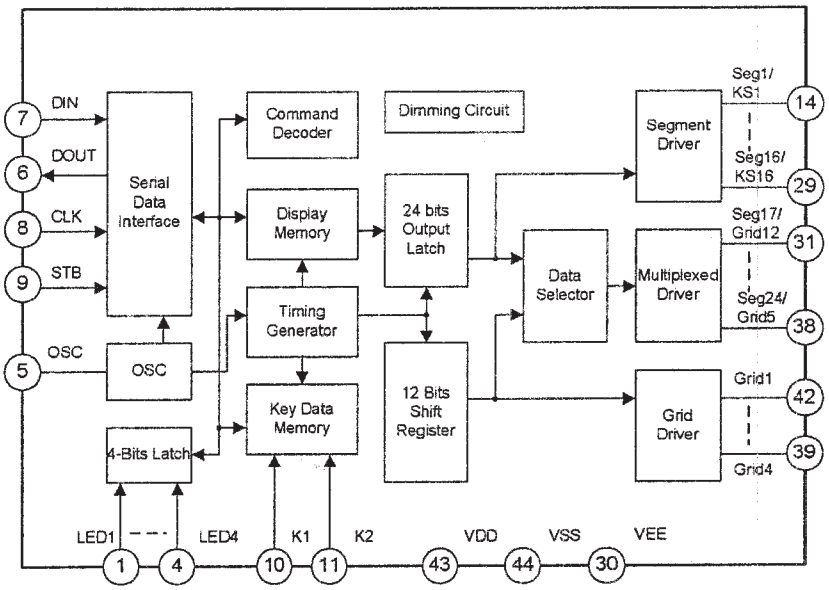

• Pin Function

Pin No.	Pin Name	Description
7	DIN	Data input pin. Input serial data at rising edge of shift clock, starting from the low order bit.
6	DOUT	Data output pin. Output serial data at the falling edge of the shift clock, starting from low order bit. This is N-ch open-drain output pin.
9	STB	Strobe pin. Initializes serial interface at the rising or falling edge of the SC16315. It then waits for reception of a command. Data input after STB has fallen is processed as a command. While command data is processed, current processing is stopped, and the serial interface is initialized. While STB is high, CLK is ignored.
8	CLK	Clock input pin. Reads serial data at the rising edge, and outputs data at the falling edge.
5	OSC	Oscillator pin. Determine the oscillation frequency by the resistor connecting this pin and GND (Vss).
14 ~ 29	Seg1/KS1 to Seg16/KS16	High-voltage output (segment). Segment output pins (Dual function as key source).
39~42	Grid1 to Grid4	High-voltage output (grid). Grid output pins.
31~38	Seg17/Grid12 to Seg24/Grid5	High-voltage output (segment/grid). Segment or grid driving.
1 ~4	LED1 to LED4	LED output pin. CMOS output. +20mA max.
10 ~ 11	KEY1 to KEY2	Key data input. Data input to these pins is latched at the end of the display cycle.
13, 43	VDD	Logic power pin. 5V±10%
12, 44	Vss	Logic ground. Connect this pin to system GND.
30	VEE	Pull-down level. VDD-35V max.

6. SERVICE MODE
6.1 SERVICE MODE

[1] Display mode for numbers of protection detections

[Purpose]

The numbers of detections for various protection processes are displayed.

[How to enter]

During Standby mode, simultaneously press and hold the [FM/AM] and [TUNE/PRESET] buttons for 2 seconds to enter this mode.

[Basic operations]

Key Operation	FL Display	Time (sec.)	Description of Indications
(STANDBY state)			
[FM/AM] + [TUNE/PRESET] buttons (Initial display)(press and hold the keys for 2 seconds.)	DC 005 *2 → Counter		Number of DC error detections
[TONE DIRECT] buttons	OVER 003 *2 → Counter		Number of OVERLOAD error detections
[TONE DIRECT] buttons	TEMP 007 *2 → Counter		Number of abnormal-temperature error detections
[TONE DIRECT] buttons	PWR 007 *2 → Counter		Number of POWER PROTECTION error detections
(Initial display)			

*1 SACD/CD Function state
*2 Variable range: 0 to 255

[2] Reset mode for numbers of protection detections

* Counter sets it in ALL Zero ("000") when you reset the numbers of protection detections.

[Purpose]

For clearing all the counts of protection detections. (This mode resets the counts of protection detections.)

[How to enter]

During Standby mode, simultaneously press and hold the [FM/AM] and [TONE] buttons for 5 seconds to enter this mode.

[Basic operations]

Key Operation	FL Display	Time (sec.)	Description of Indications
(STANDBY state)			
[FM/AM] + [TONE] buttons (press and hold the keys for 5 seconds.)	CLEAR?		
[TONE DIRECT] buttons	OK	5 (-> normal) *2	
(Counter clear end)			
(Normal display)	SACD/CD	usually	

*1 SACD/CD Function state
*2 "5 (-> normal)" denotes that the display will return to the normal indication when no key operation is performed for 5 seconds.

[3] The unit's operation when a error is detected

[Purpose]

- The unit's operation when a DC/OVER/TEMP/POWER error is detected is described here.
- How to cancel the status after detection of the DC and POWER errors are described here, because no key input will be accepted after the DC or POWER error detection.

[How to enter/exit]

During Standby mode, simultaneously press and hold the [FM/AM] and [+/➡] buttons for 2 seconds to enter this mode. The display will return to the normal indication when no key operation is performed for 5 seconds.

[Basic operations]

3.1 DC (AMP is abnormality) error detection

Key Operation	FL Display	Time (sec.)	Description of Indications
(Normal display)	S A C D / C D	usually	
(DC detection)	S A C D / C D		
↓ (Auto)	↓		
(RECEIVER POWER OFF)			

Processes when a DC (AMP abnormality) error is detected

The following processes will take place:

[1] Immediately after a DC error is detected, muting is turned ON and speaker relay is turned OFF.
[2] The DC error count is increased by 1.
[3] The DC circuit is monitored for 3 sec.
  [3-1] If the circuit is normalized within 3 sec., the unit will return to a normal mode.
  [3-2] If the circuit cannot be normalized within 3 sec., the unit will shut itself OFF.
  [3-3] If a user turns the unit OFF within 3 sec. after the detection, it will be turned OFF.
[4] If the unit shuts itself OFF as mentioned in [3-2], you cannot turn it ON unless you perform the procedures described in "How to cancel the status after detection of a DC or POWER PROTECTION error."

3.2 OVERLOAD (overcurrent) error detection

Key Operation	FL Display	Time (sec.)	Description of Indications
(Normal display)	S A C D / C D	usually	
(OVERLOAD detection)	S A C D / C D		
↓ (Auto)	↓		
(RECEIVER POWER OFF)			

Processes when an OVERLOAD (overcurrent) error is detected

The following processes will take place:

[1] Immediately after an OVERLOAD (overcurrent) error is detected, muting is turned ON and speaker relay is turned OFF, then the unit is turned OFF.
  The processes of muting ON and speaker-relay OFF must be completed before the unit is turned OFF.
[2] The OVERLOAD (overcurrent) error count is increased by 1.

Key operations will not be prohibited even after detection of such an error. (The unit can be turned ON.)

3.3 TEMP (AMP overheat) error detection

After a TEMP error is detected, the count of protection activation detections will be updated.
Key operations will not be prohibited even after the unit shuts itself OFF after detection of such an error.
(The unit can be turned ON.)

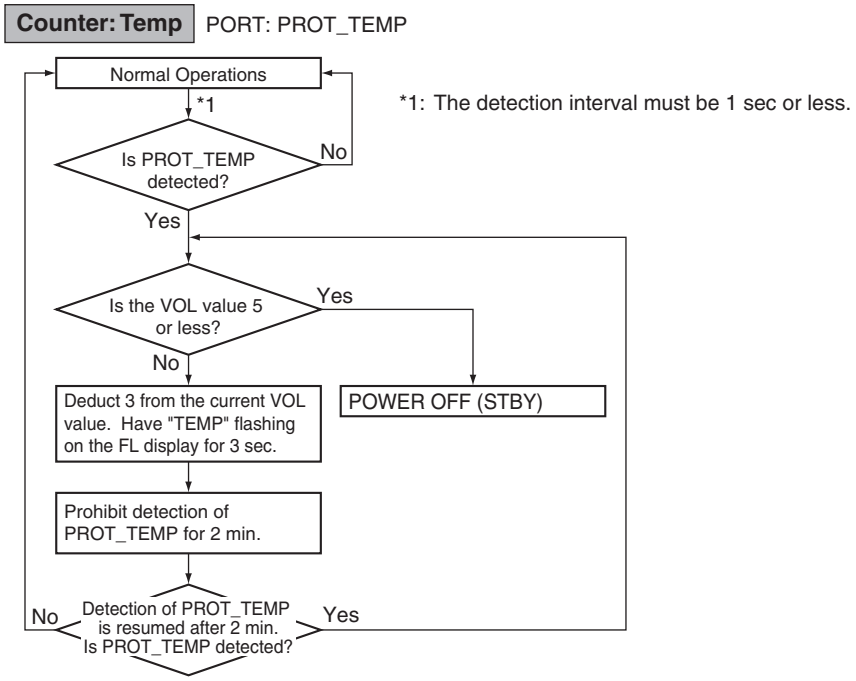

3.4 POWER PROTECTION error detection

Key Operation	FL Display	Time (sec.)	Description of Indications
(Normal display)	SACD / CD	usually	
(POWER PROTECTION detection)	SACD / CD		
↓ (Auto)	↓		
(RECEIVER POWER OFF)			

Immediately after a POWER PROTECTION error is detected, muting is turned ON and speaker relay is turned OFF, then the unit is turned OFF.
If the unit automatically shuts itself OFF after such an error is detected, no key input will be accepted afterward.
(The power will not be turned ON.)
To turn it on again, see “[4] How to cancel the status after detection of a DC or POWER PROTECTION error” below.

[4] How to cancel the status after detection of a DC or POWER PROTECTION error

Key Operation	FL Display	Time (sec.)	Description of Indications
(STANDBY state)			
[FM/AM] + [+/➡] buttons (press and hold the keys for 2 seconds.)			
↓	↓		
(Normal display)	SACD / CD	usually	

[Detailed explanations]

Simultaneously holding the [FM/AM] and [+/➡] keys for 2 seconds will cancel Key Input Inhibition mode after the DC or POWER PROTECTION error detection and turn the unit ON.

6.2 FACTORY DEFAULT SETTINGS

Restoring all the settings to the factory default settings

Use this procedure to reset all the receiver's settings to the factory default. Use the front panel controls to do this.

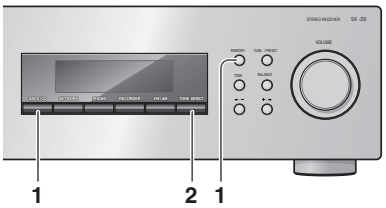

1 When power is in standby mode, hold SACD/CD button and MEMORY button depressed simultaneously for two seconds.

2 When you see "RESET?" appear in the display, press TONE DIRECT button.

OK appears in the display to indicate that the receiver has been reset to the factory default settings.

7. DISASSEMBLY

Note 1 : Even if the unit shown in the photos and illustrations in this manual may differ from your product, the procedures described here are common.
Note 2 : As for the assembling, please perform assembling following to the opposite procedures of How to Disassemble. If any notes are existed, please follow those instructions.
Note 3 : Discharge the electricity of the unit, before the diagnosis. (Refer to the **" [1] Discharge"**)

[1] Discharge

[1-1] Main Capacitor (C509, C510)

(1) Unplug the power cord.
(2) Remove the Cabinet.
(Refer to the **" [2-1] Cabinet"**.)

(3) Connect J319(B+) of the MAIN ASSY to J289(B-) or J290(B-), with a resistor of 47 to 100Ω , 2W or more.
∗ Discharge time: 30 to 60 sec. (according to the resistor.)
(4) Check by a tester if the voltage of each B+ and B- terminal is 1 V or less.
∗ Connect the tester's GND terminal to a Chassis.
∗ If the voltage is higher than 1V, repeat the step (3).

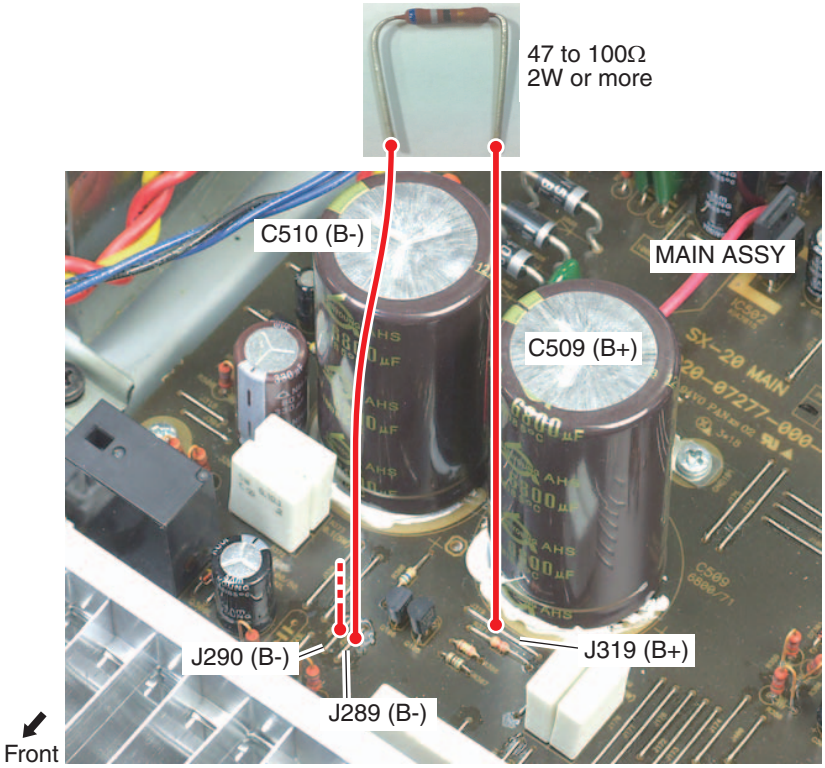

[1-2] FL -30V

[Method: 1]

(1) Unplug the power cord.
(2) Remove the Cabinet.
(Refer to the **" [2-1] Cabinet"**.)
(3) Disconnect the connector.
(Refer to the step (1) and (2) of **" [2-2] Front Section"**.)

(4) Connect J138(-30V) of the MAIN ASSY to J186(GND), with a resistor of 47 to 100Ω, 2W or more.
∗ Discharge time: 5 to 10 sec. (according to the resistor.)
(5) Check by a tester if the voltage of -30V terminal is 1 V or less.
∗ Connect the tester's GND terminal to a Chassis.
∗ If the voltage is higher than 1V, repeat the step (4).

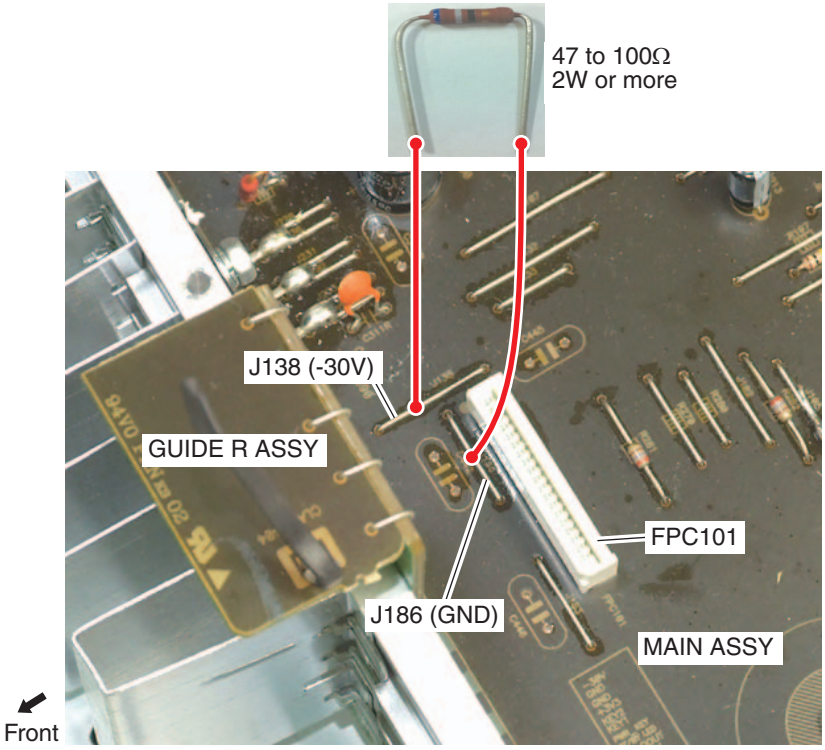

[Method: 2]

(1) Unplug the power cord.

(2) Remove the Cabinet.
(Refer to the " **[2-1] Cabinet**".)

(3) Connect J304(-30V) of the MAIN ASSY to J272(GND), with a resistor of 47 to 100Ω, 2W or more.

∗ Discharge time: 5 to 10 sec. (according to the resistor.)

(4) Check by a tester if the voltage of -30V terminal is 1 V or less.

∗ Connect the tester's GND terminal to a Chassis.

∗ If the voltage is higher than 1V, repeat the step (3).

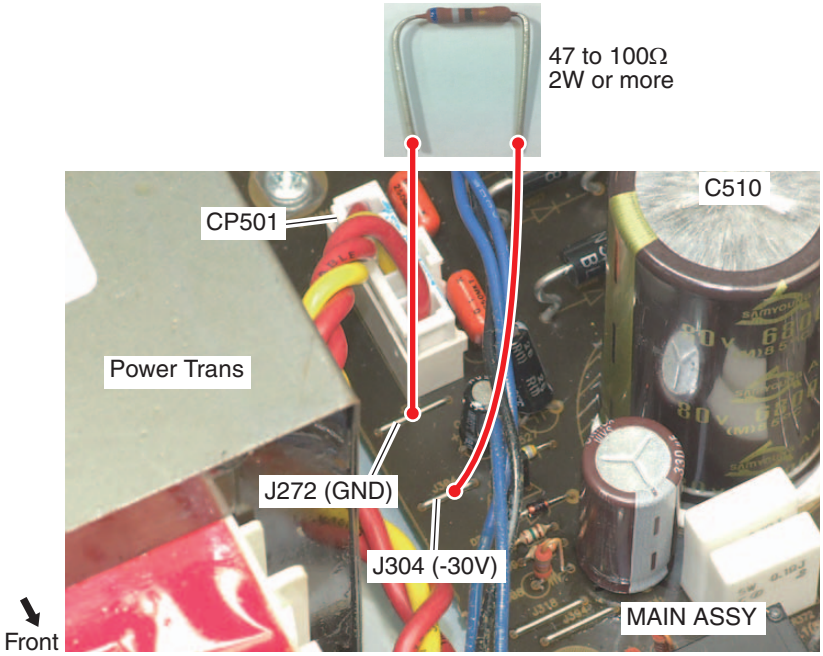

[2] Disassembly

[2-1] Cabinet

(1) Remove the six screws.
(S-20-K: 1500040083B10-IL)
(S-20-S: 1500040084B10-IL)

(2) Remove the five screws.
(B020030103B11-IL)

(3) Remove the Cabinet.

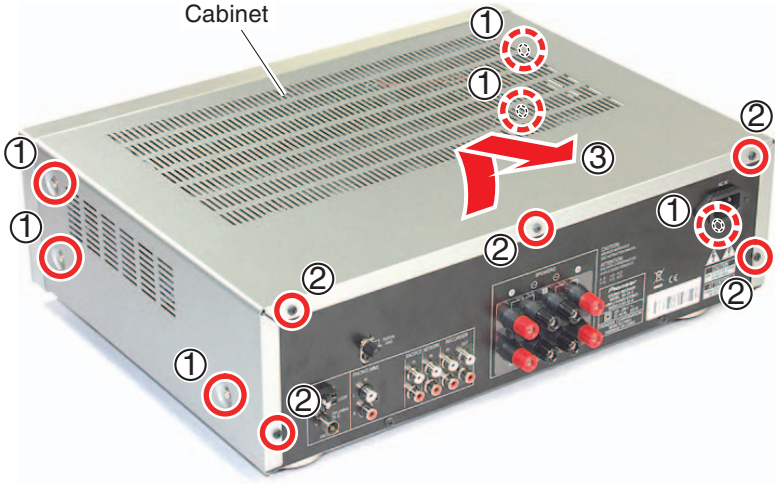

[2-2] Front Section

Remove the Cabinet.
(Refer to the " **[2-1] Cabinet**".)

---

(1) Release the 19P FFC from the PCB binder.

(2) Disconnect the connector.

Note on assembling:

When you attach each unit, styling and connection of cable as shown in the photo.

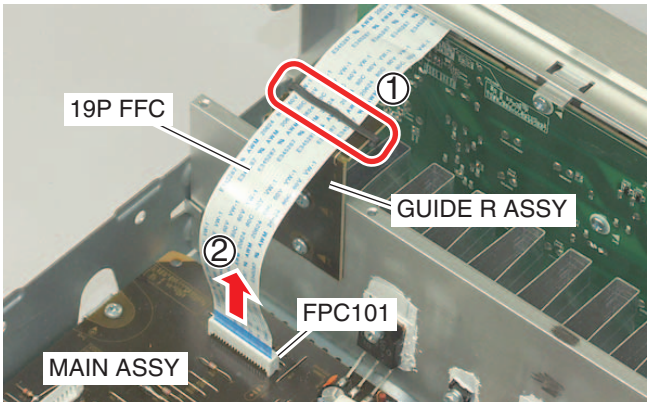

(3) Release the cables from the two PCB binders.
(4) Disconnect the two connectors.

Note:

When you carry out the diagnosis of the Front Section, it is not necessary to disconnect the connectors.

Note on assembling:

When you attach each unit, styling and connection of cables as shown in the photo.

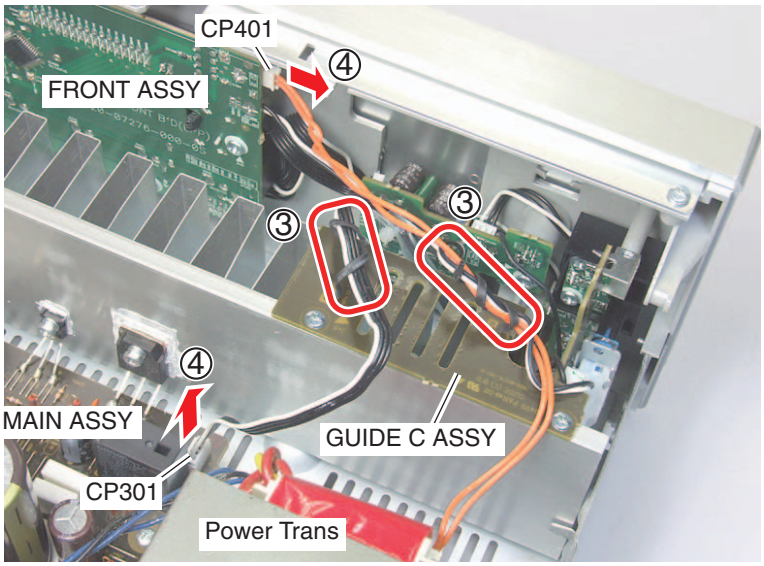

(5) Remove the five screws.
(S-20-K: B020030083B10-IL)
(S-20-S: B020030084B10-IL)

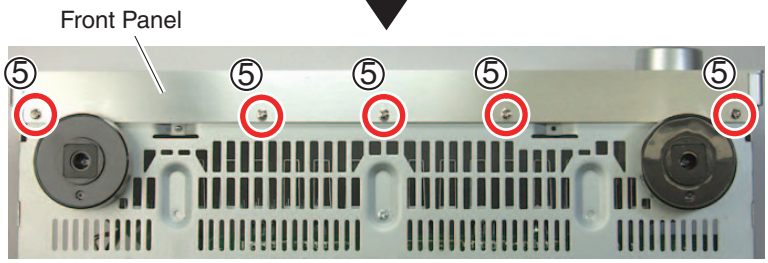

• Bottom view

(6) Remove the two screws.
(B020030061B10-IL)
(7) Unhook the two Hooks of the Panel Frame and remove the Front Section.

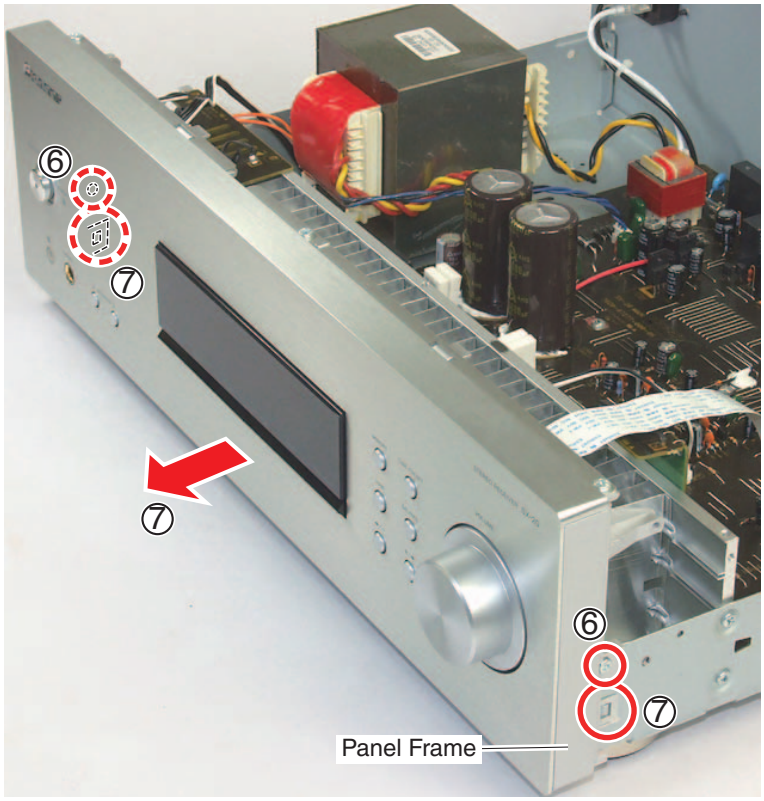

(8) Remove the screw.
(B020030081B10-IL)

Note:

When you carry out the diagnosis of the Front Section, it is not necessary to remove the screw.

Note on assembling:

When you attach each unit, styling and connection of cables as shown in the photo.

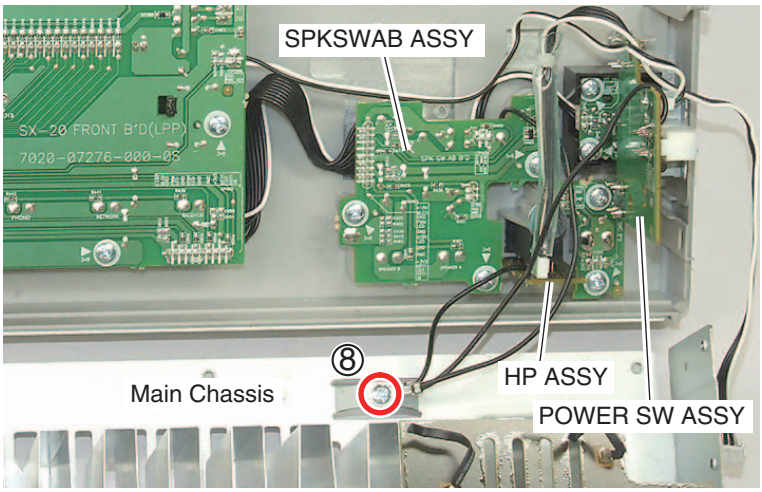

[2-3] MAIN ASSY

Remove the Cabinet.
(Refer to the " **[2-1] Cabinet**".)

---

(1) Disconnect the two terminals.

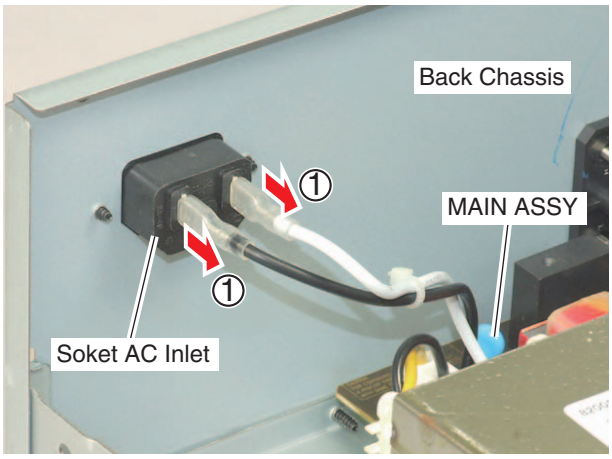

(2) Remove the Speaker Sheet (with the Screw Cover).

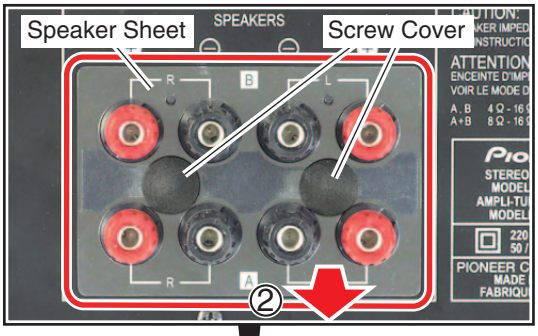

(3) Remove the nine screws.
(B020030103B11-IL)

(4) Remove the Back Chassis.

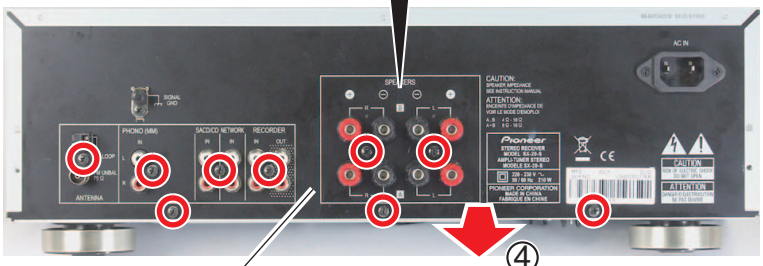

(5) Disconnect the two connectors.

Note on assembling:

When you attach each unit, styling and connection of cables as shown in the photo.

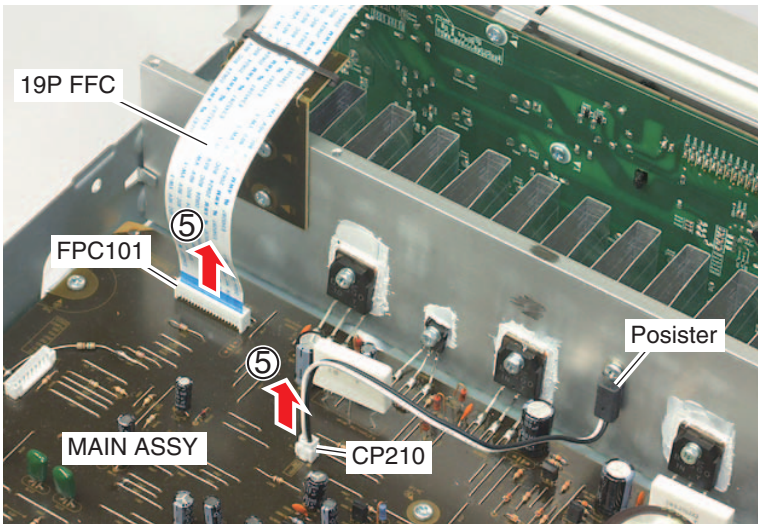

(6) Disconnect the four connectors.

Note on assembling:

When you attach each unit, styling and connection of cables as shown in the photo.

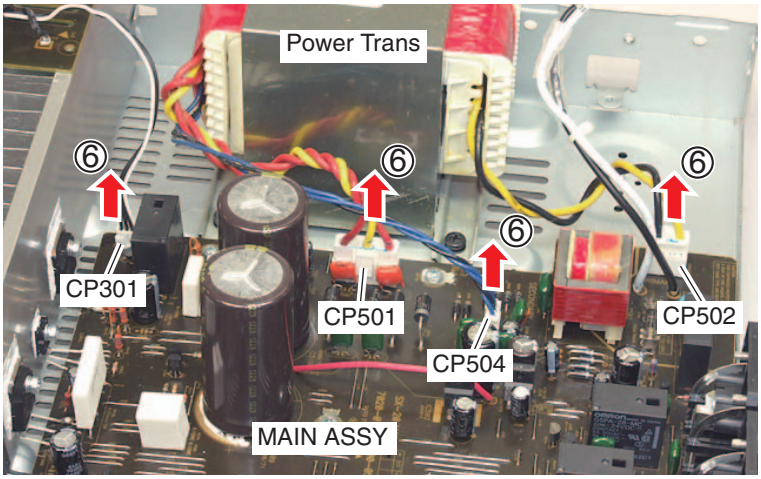

(7) Remove the six screws. (B018230141H11-IL)

(8) Remove the three screws. (B020030081B10-IL)

(9) Remove the five screws. (B020030181B10-IL)

(10) Remove the MAIN ASSY.

Note on assembling

∗1: Apply even coatings of silicon grease (GEM1057) on the Heat Sink side of the six transistors.

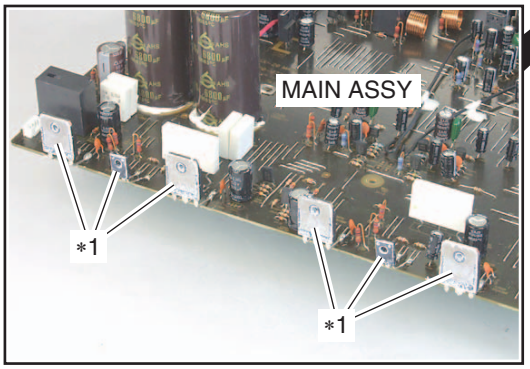

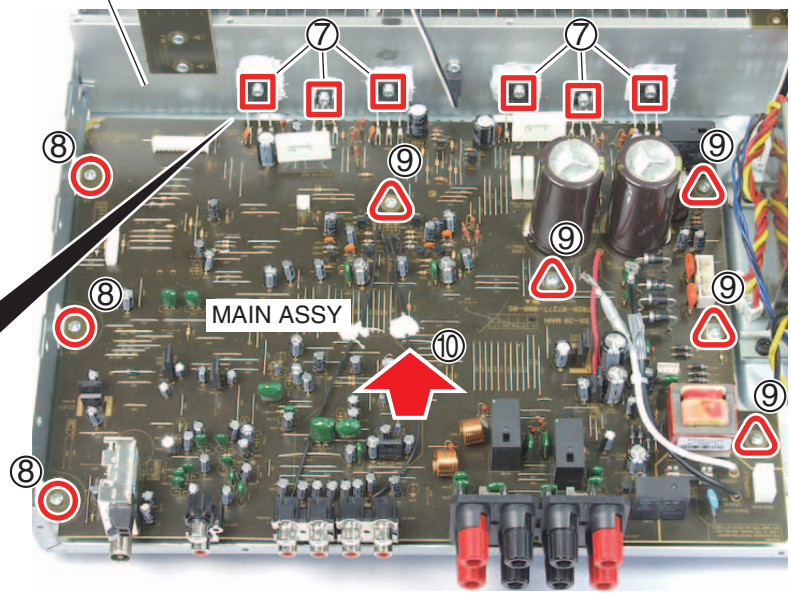

(11) Remove the soldering at 18 points, and then remove the six transistors.

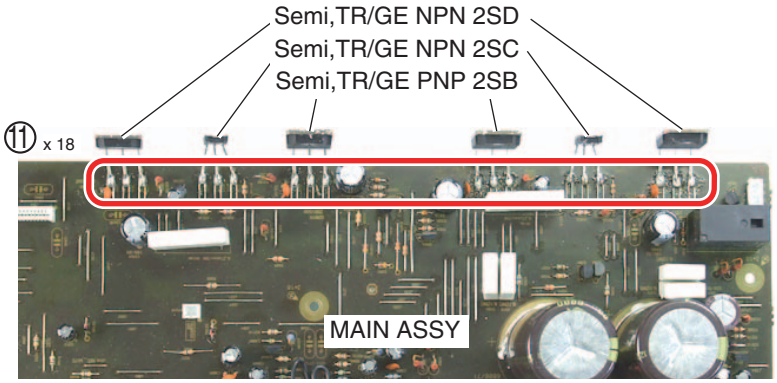

[3] Diagnosis

Remove the Front Section.
(Refer to the " **[2-2] Front Section**".)

---

(1) Arrange the unit as shown in the photo.

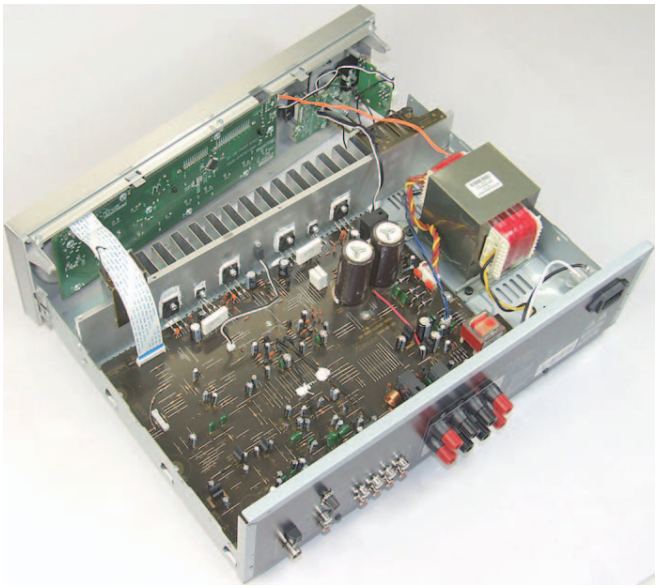

[4] Notes on assembling

[4-1] Direction of Insulator

(1) Align the mark at under surface of the Insulator with the direction of photo.

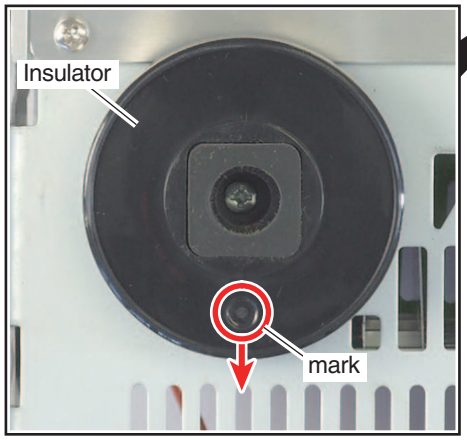

• Bottom view

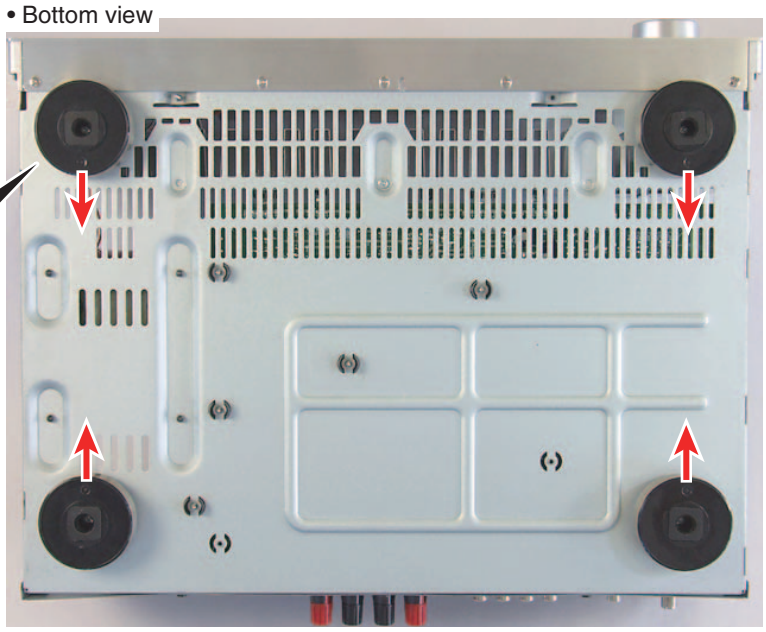

8. EACH SETTING AND ADJUSTMENT

There is no information to be shown in this chapter.

9. EXPLODED VIEWS AND PARTS LIST

NOTES: ● *Parts marked by "NSP" are generally unavailable because they are not in our Master Spare Parts List.*
● *The ⚠ mark found on some component parts indicates the importance of the safety factor of the part. Therefore, when replacing, be sure to use parts of identical designation.*
● *Screws adjacent to ▼ mark on product are used for disassembly.*
● *For the applying amount of lubricants or glue, follow the instructions in this manual. (In the case of no amount instructions, apply as you think it appropriate.)*

9.1 PACKING SECTION

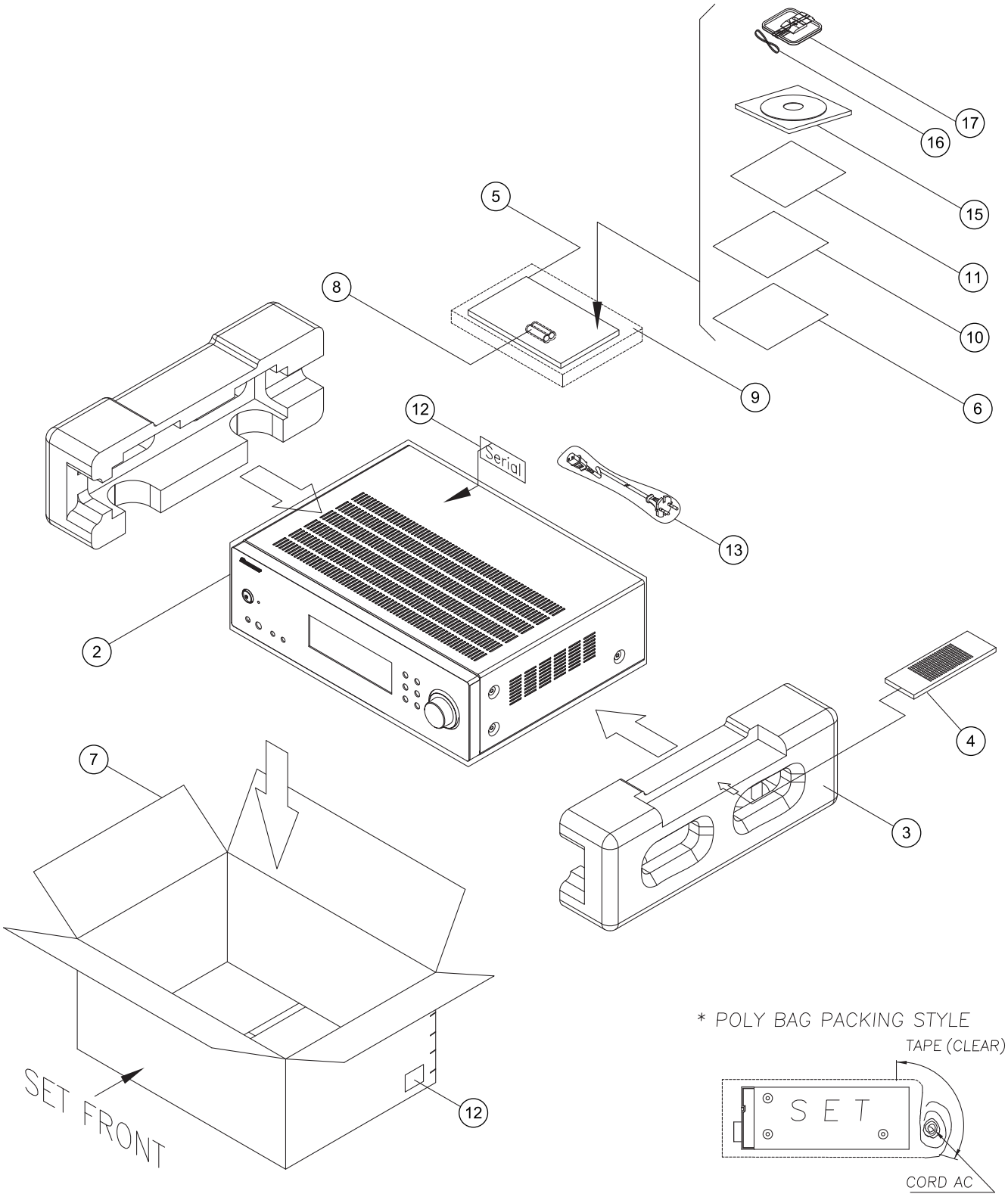

(1) PACKING SECTION PARTS LIST

Mark	No.	Description	Part No.
	1	• • • • •	
	2	PE Sheet	6327040059000-IL
	3	Cushion Snow	6230213344000-IL
	4	Remote Control (AXD7647)	8300764700010-IL
	5	Quick Start Guide	5707000007450-IL
	6	Safety Brochure	5227000002540-IL
	7	Box Gift	See Contrast table (2)
NSP	8	AAA Size IEC R03 Dry Cell Batteries x2	
NSP	9	Poly Bag	6337040062010-IL
NSP	10	Warranty Card	ARY7158
NSP	11	Sheet SP Caution	
NSP	12	Label	VRW1629
⚠	13	Power Cord	L068250160020-IL
	14	• • • • •	
	15	Operating Instructions (CD-ROM)	6517000001020-IL
	16	FM Wire Antenna	E605010140010-IL
	17	AM Loop Antenna	E601019000010-IL

(2) CONTRAST TABLE

SX-20-K/YXE8 and SX-20-S/YXE8 are constructed the same except for the following:

Mark	No.	Symbol and Description	SX-20-K/YXE8	SX-20-S/YXE8
	7	Box Gift	6007212270010-IL	6007212270000-IL

9.2 EXTERIOR SECTION

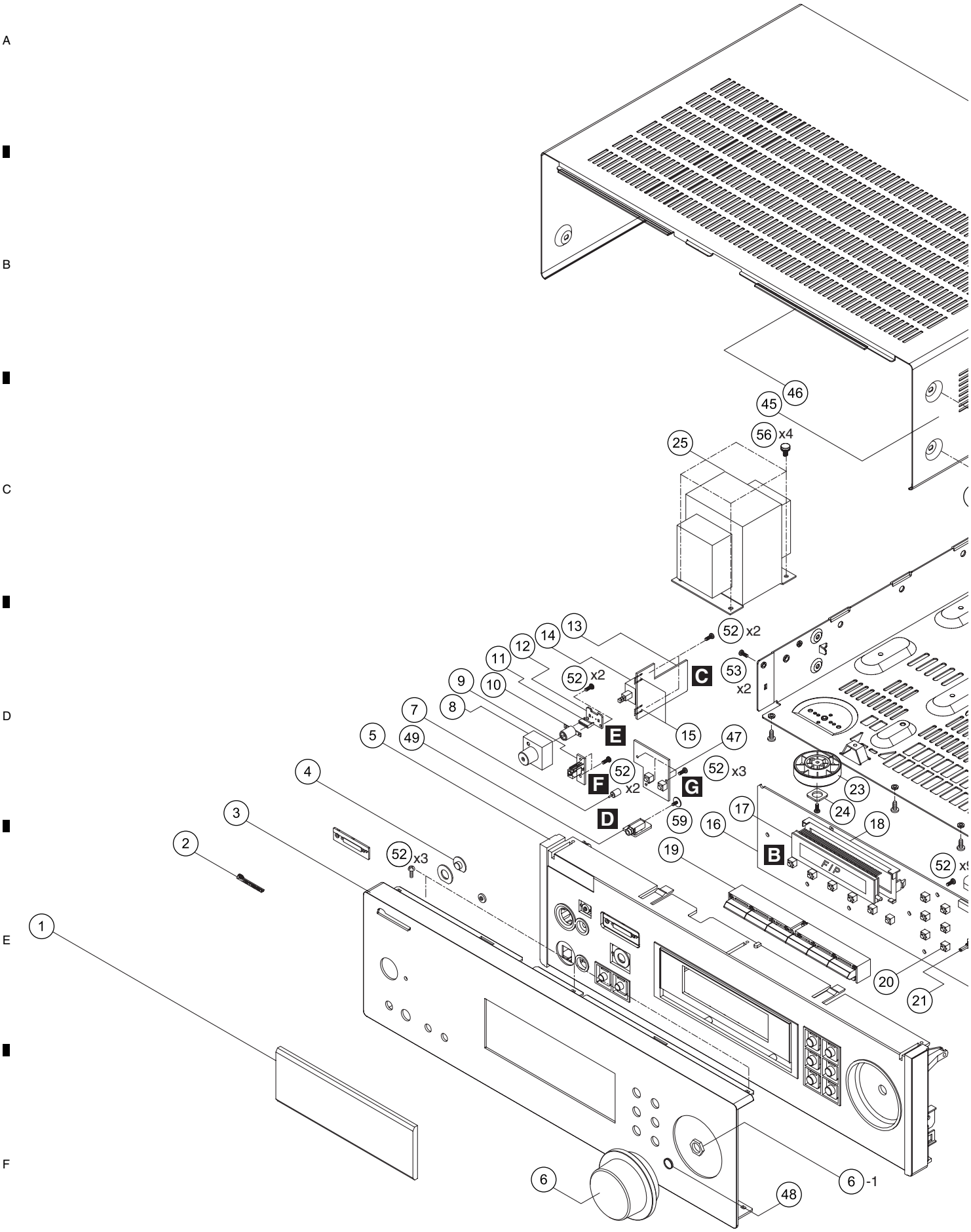

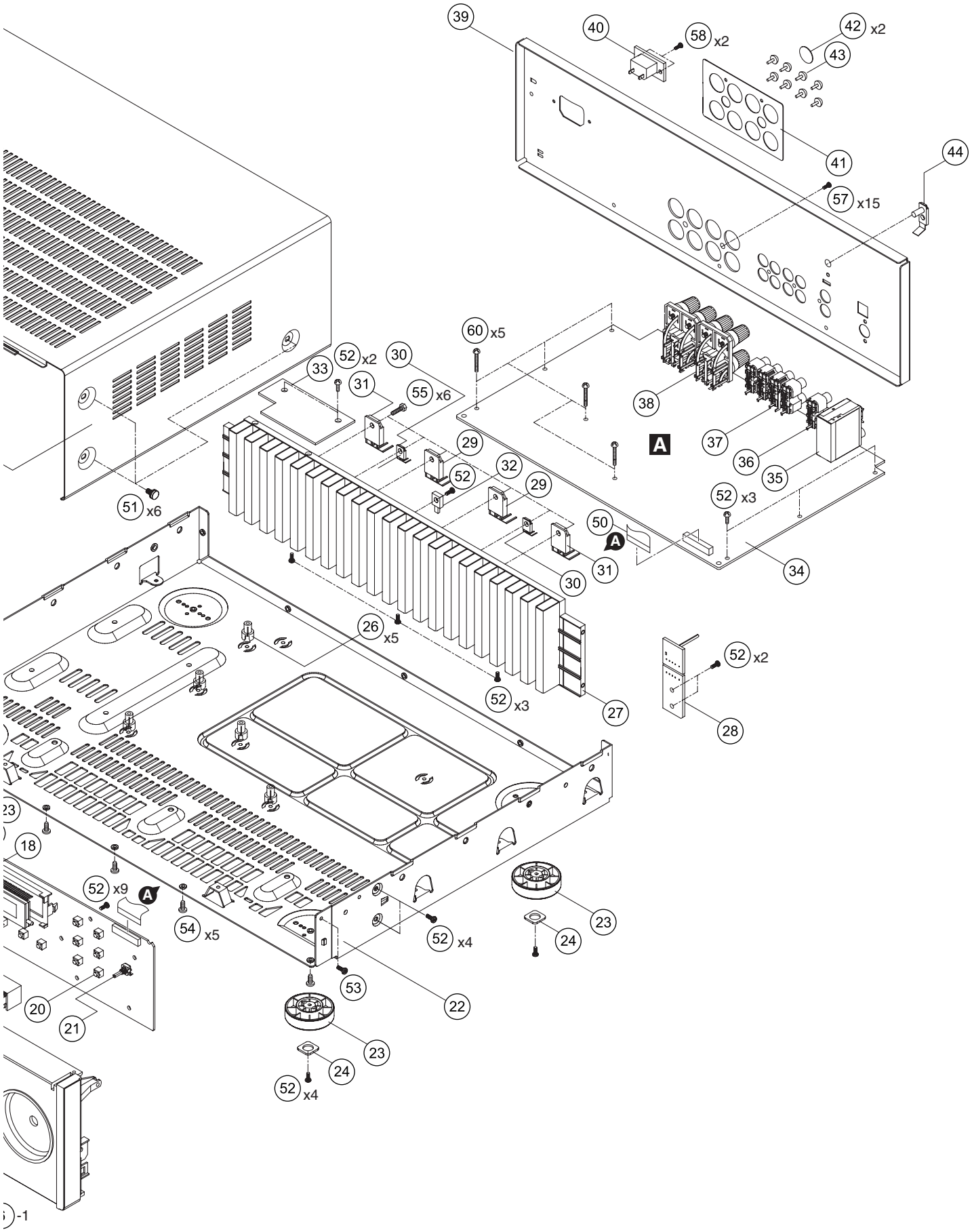
39
40
58 x2
42 x2
43
41
44
57 x15
60 x5
52 x2
33
30
31
55 x6
38
29
A
37
36
35
32
52
29
52 x3
51 x6
50
A
31
30
34
26 x5
52 x2
52 x3
27
28
23
18
52 x9
A
54 x5
52 x4
23
24
53
22
20
21
23
24
52 x4
-1

(1) EXTERIOR SECTION PARTS LIST

Mark	No.	Description	Part No.
	1	Window	5077213453000-IL
	2	Pioneer Badge	See Contrast table (2)
	3	Front Panel	See Contrast table (2)
	4	Lens	See Contrast table (2)
	5	Panel Frame	See Contrast table (2)
	6	Knob	See Contrast table (2)
	7	Lens	3710210693000-IL
	8	Knob Assy	See Contrast table (2)
	9	RMC ASSY	7028072765010-IL
	10	Lens	3710210673000-IL
NSP	11	Stopper LED	
	12	LED ASSY	7028072762010-IL
	13	POWER SW ASSY	7028072763010-IL
	14	SW Push	G000121014110-IL
NSP	15	Blacker Screw	
	16	FRONT ASSY	7028072761010-IL
	17	Display FLT	K530121300010-IL
	18	Holder	432004078301A-IL
	19	6key Button	5090215231000-IL
	20	Switch	G180501000010-IL
	21	SW,Encoder	G121123070010-IL
NSP	22	Main Chassis	
	23	Foot	See Contrast table (2)
	24	Cushion	4050211605000-IL
⚠	25	Power Trans	8200858690450-IL
	26	Spacer	4300040561010-IL
	27	Heat Sink	2120200088050-IL
	28	GUIDE R ASSY	7028072768010-IL
	29	Transistor (Q307)	J5011560Y0000-IL
	30	SEMI,TR/GE NPN 2SC (Q305)	J502396400010-IL
	31	Transistor (Q306)	J5032390Y0000-IL
	32	Posistor	F320161025240-IL
	33	GUIDE C ASSY	7028072767010-IL
	34	MAIN ASSY	7028072771010-IL
	35	Tuner FM/AM	E903104100780-IL
	36	RCA Jack	G601207AE020Y-IL
	37	TER RCA 4Pin	G6020421E070Y-IL
	38	TER Board Screw 8P	G614108V1020M-IL
	39	Back Chassis	See Contrast table (2)
	40	Socket,power AC	G430040560021-IL
NSP	41	Sheet Speaker	
	42	Screw Cover	4050211745100-IL
NSP	43	Bushing	
NSP	44	Terminal	
	45	Cabinet	See Contrast table (2)
	46	Sheet (Himelon)	1210211749000-IL
	47	SPK SW AB ASSY	7028072764010-IL
NSP	48	Coil Spring	
	49	HP ASSY	7028072766010-IL
	50	Cable Flat Card 1.25	N712191824880-IL
	51	Screw	See Contrast table (2)
	52	Screw	BBZ30P080FTC
	53	Screw	BBZ30P060FTC
	54	Screw	See Contrast table (2)
	55	Screw	B018230141H11-IL
	56	Screw	B028940101B11-IL
	57	Screw	BBT30P100FTB
	58	Screw	CBZ30P080FTB
	59	Screw	1500001456010-IL
	60	Screw	BBZ30P180FTC

(2) CONTRAST TABLE

SX-20-K/YXE8 and SX-20-S/YXE8 are constructed the same except for the following:

Mark	No.	Symbol and Description	SX-20-K/YXE8	SX-20-S/YXE8
	2	Pioneer Badge	BAM1004	VAM1124
	3	Front Panel	3067215798010-IL	3067215798000-IL
	4	Lens	3710210683000-IL	3710210683100-IL
	5	Panel Frame	3210212211000-IL	3217212211100-IL
	6	Knob	5080211931100-IL	5087211931000-IL
	8	Knob Assy	5088211391400-IL	5088211391500-IL
	23	Foot	4000210391000-IL	4007210391000-IL
	39	Back Chassis	3207214516010-IL	3207214516000-IL
	45	Cabinet	3007212066010-IL	3007212066000-IL
	51	Screw	1500040083B10-IL	1500040084B10-IL
	54	Screw	BBZ30P080FTB	BBZ30P080FNI

A

B

C

D

E

F

10. SCHEMATIC DIAGRAM
10.1 MAIN ASSY (1/2)

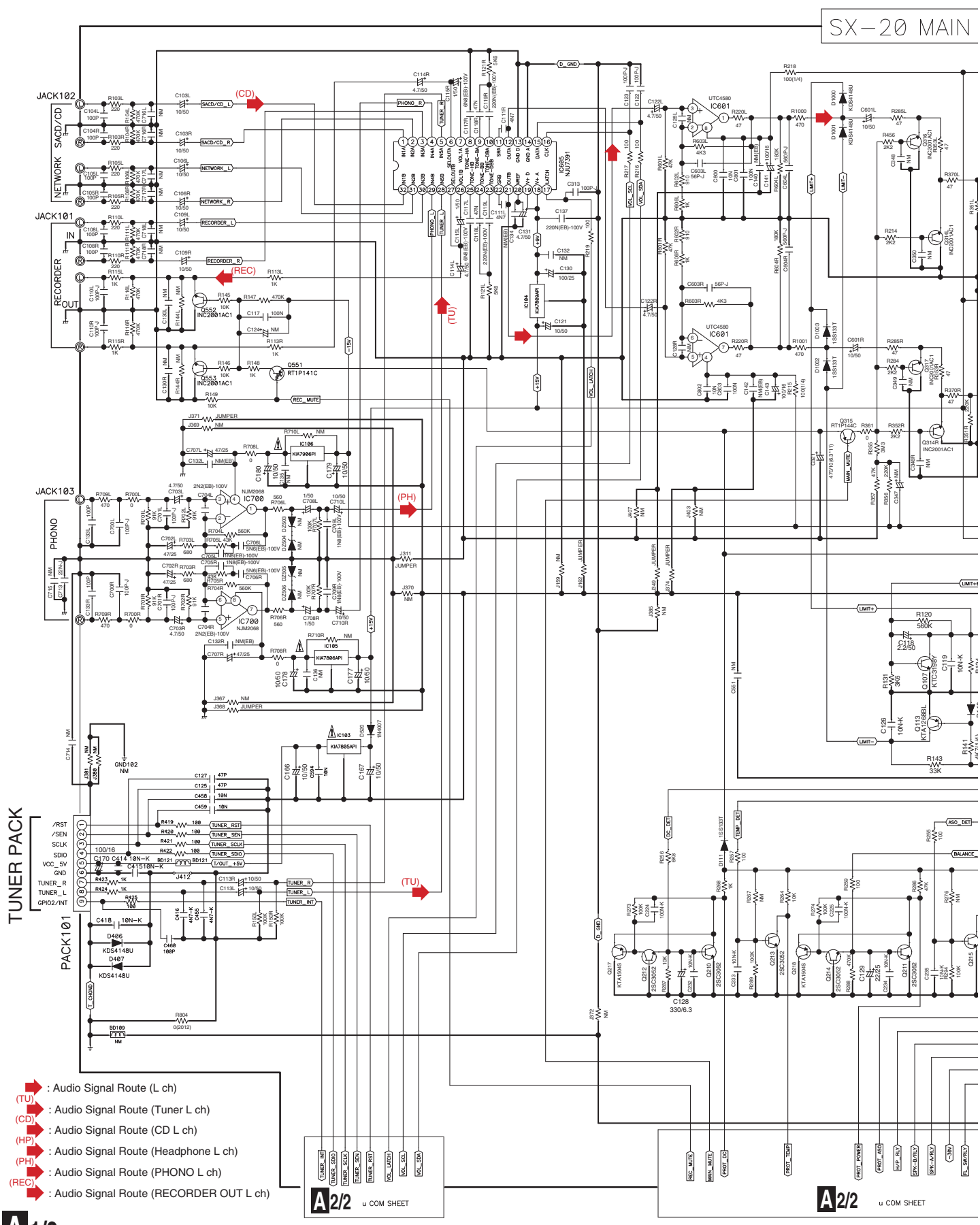

A 1/2

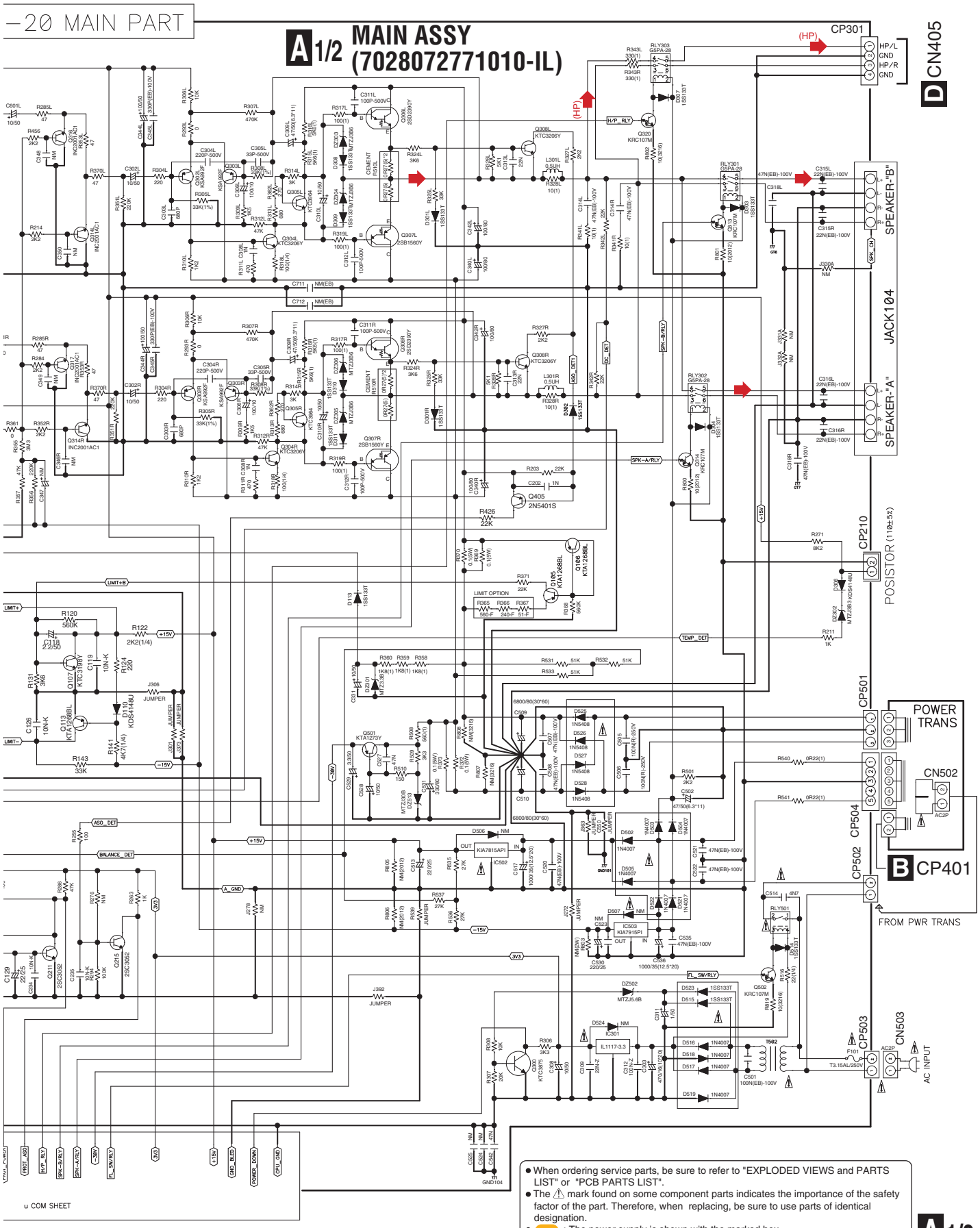

- When ordering service parts, be sure to refer to "EXPLODED VIEWS and PARTS LIST" or "PCB PARTS LIST".
- The ⚠ mark found on some component parts indicates the importance of the safety factor of the part. Therefore, when replacing, be sure to use parts of identical designation.
- : The power supply is shown with the marked box.

10.2 MAIN ASSY (2/2)

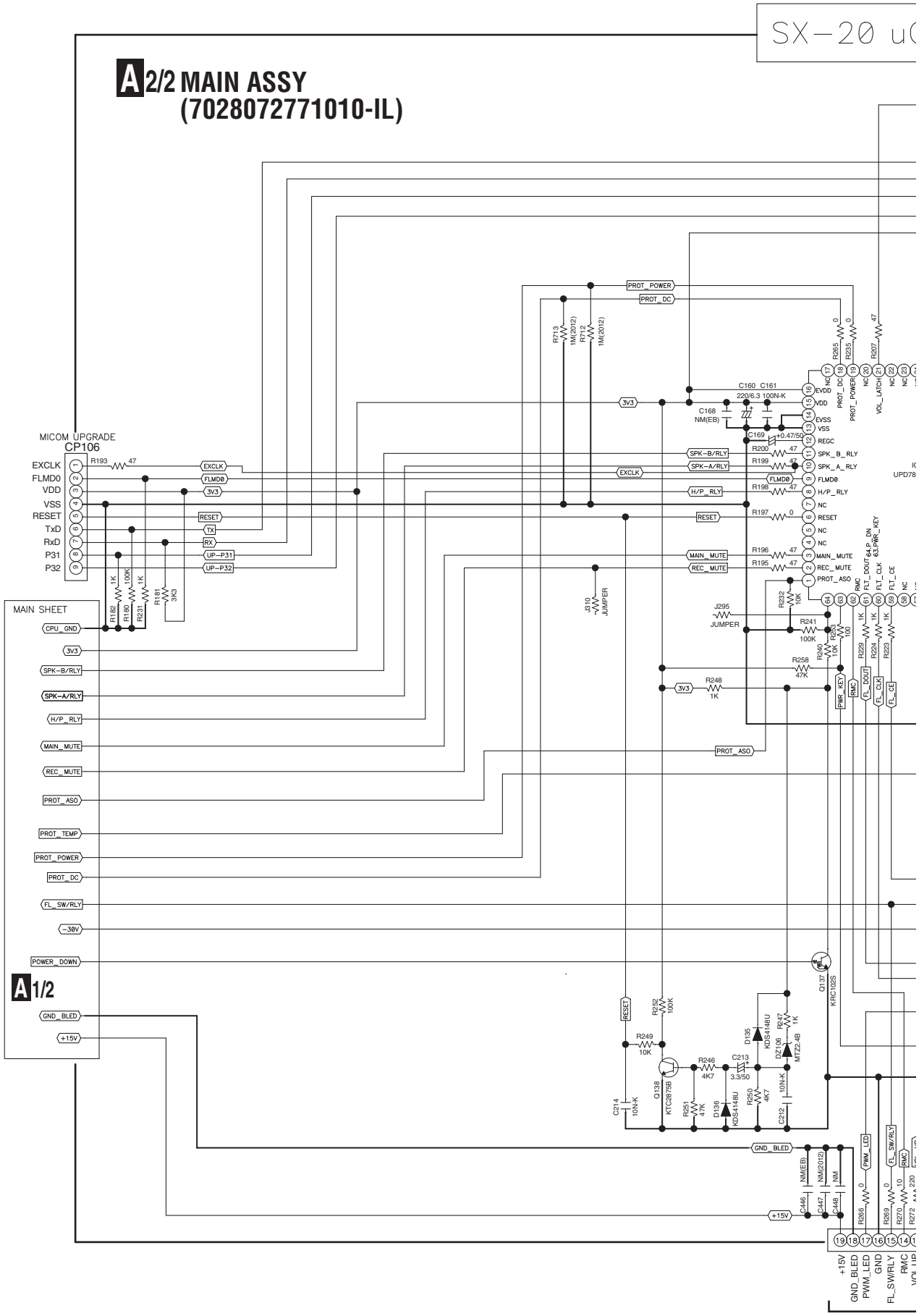

X-20 uCOM PART

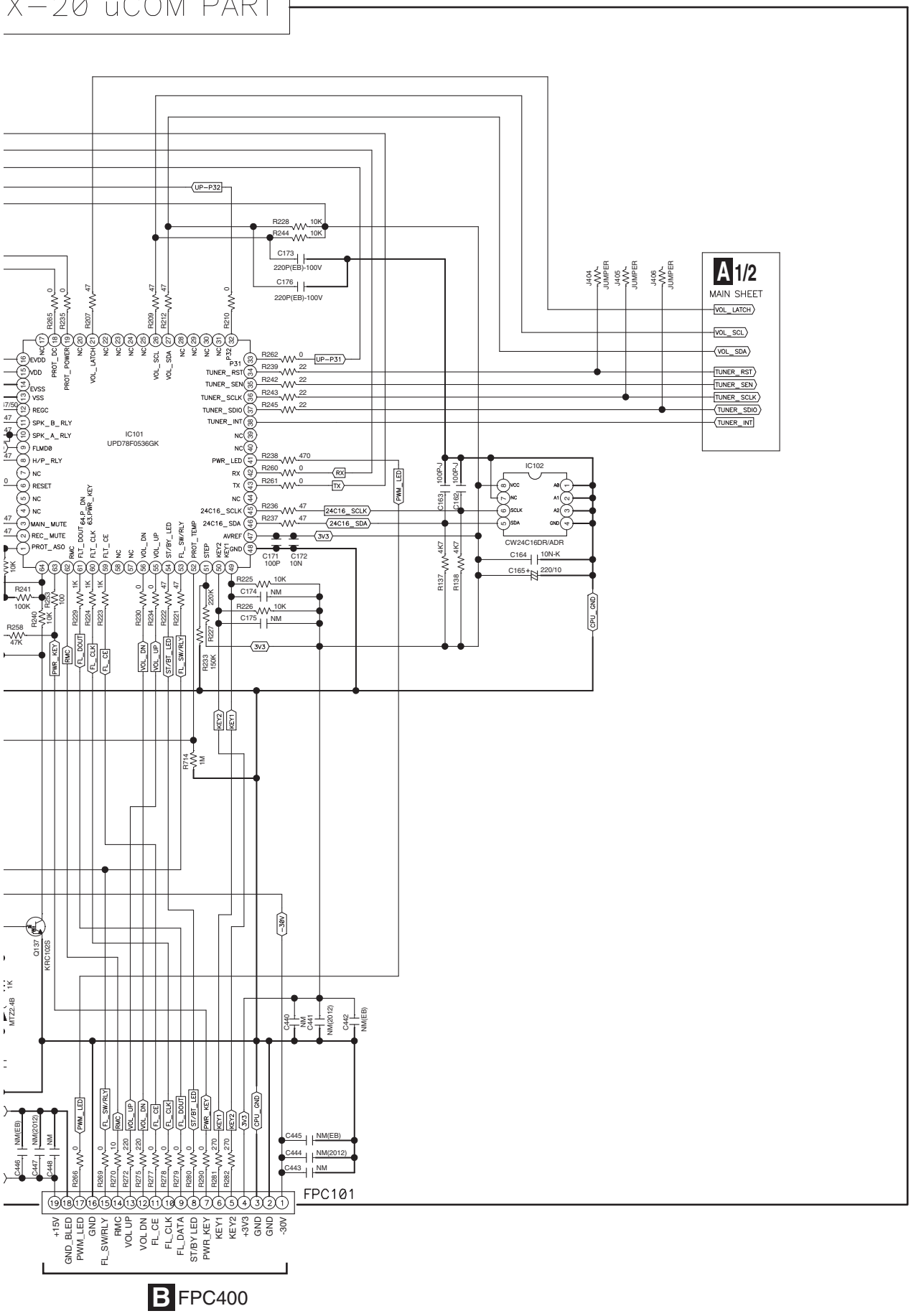

A 2/2

10.3 FRONT, LED, POWER SW. SPK SW AB, RMC and HP ASSYS

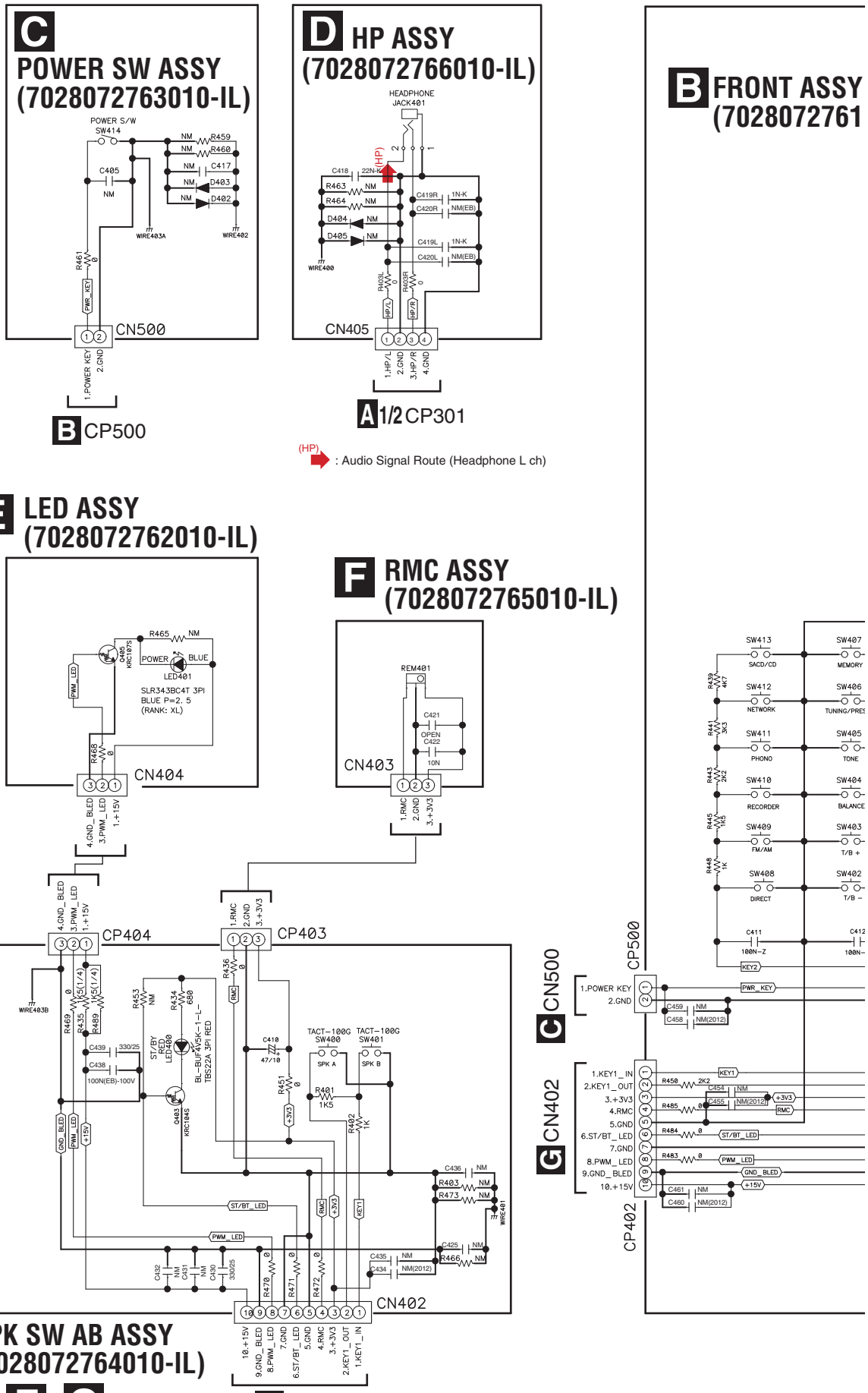

B C D E F G

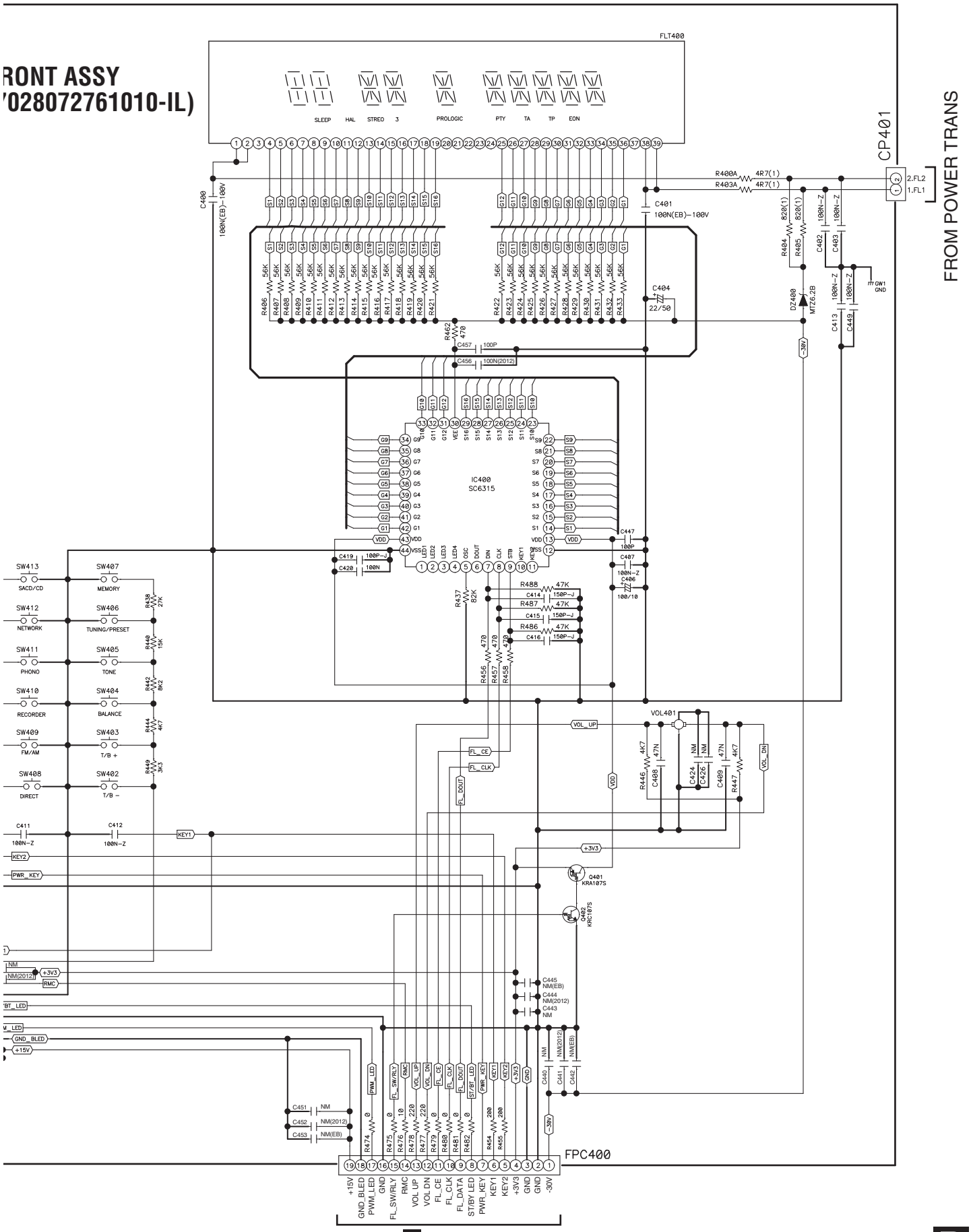
RONT ASSY
'028072761010-IL)
FLT400
SLEEP
HAL
STREO
3
PROLOGIC
PTY
TA
TP
EON
CP401
FROM POWER TRANS
2.FL2
1.FL1
IC400
SC6315
SW413
SACD/CD
SW407
MEMORY
SW412
NETWORK
SW406
TUNING/PRESET
SW411
PHONO
SW405
TONE
SW410
RECORDER
SW404
BALANCE
SW409
FM/AM
SW403
T/B +
SW408
DIRECT
SW402
T/B −
VOL401
Q401
KRA107S
Q400
KRC107S
FPC400
+15V
GND_BLED
PWM_LED
GND
FL_SW/RLY
RMC
VOL UP
VOL DN
FL_CE
FL_CLK
FL_DATA
ST/BY LED
PWR_KEY
KEY1
KEY2
+3V3
GND
GND
-30V
A 2/2 FPC101

11. PCB CONNECTION DIAGRAM
11.1 MAIN ASSY

SIDE A

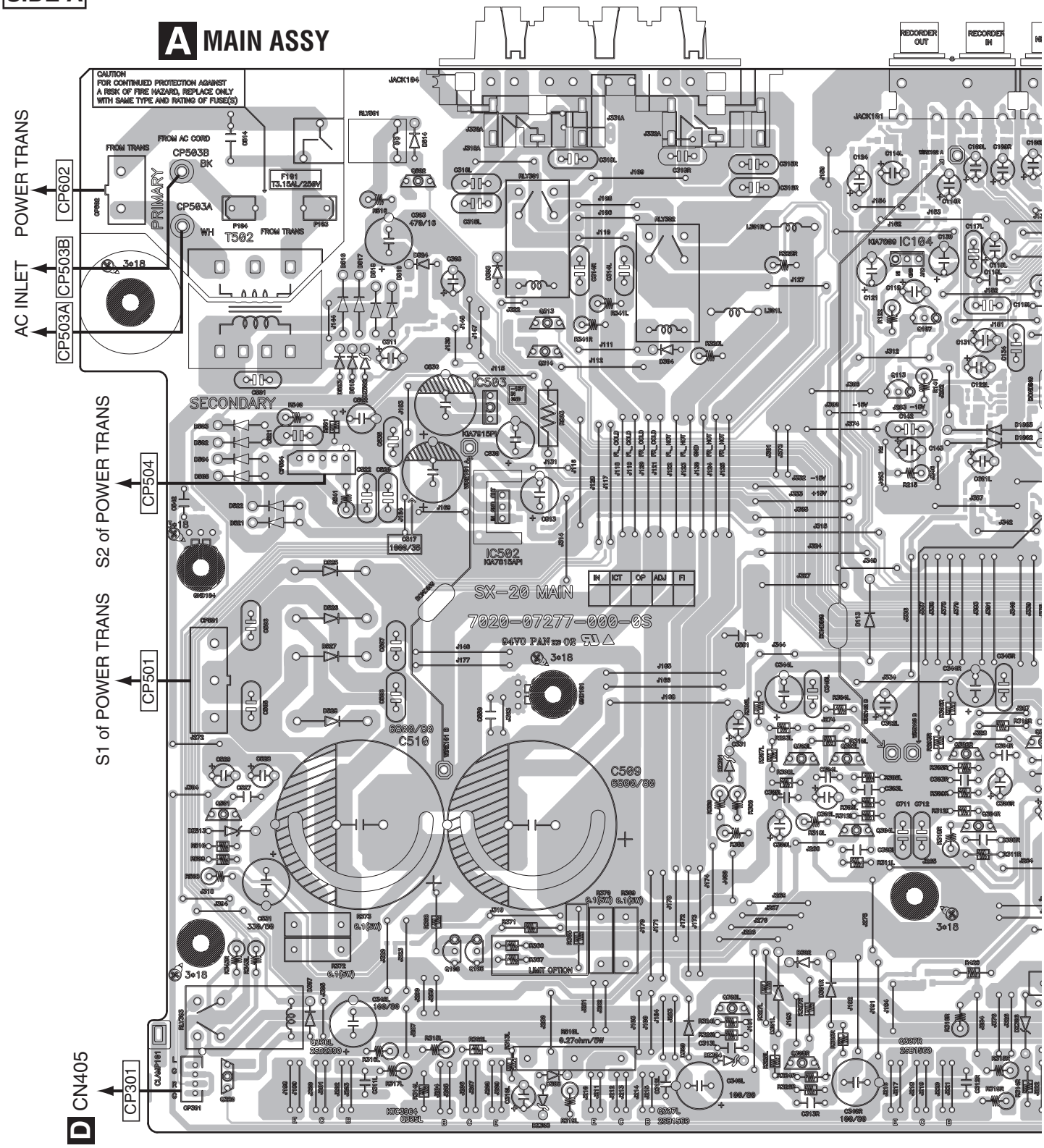

Q501 Q320 Q306L Q502 Q106 Q105 Q305L IC503 IC502 Q313 Q307L Q308L Q308R Q303L Q304L Q302L Q304R Q302R IC104 Q113 Q107 Q307R

A

SIDE A

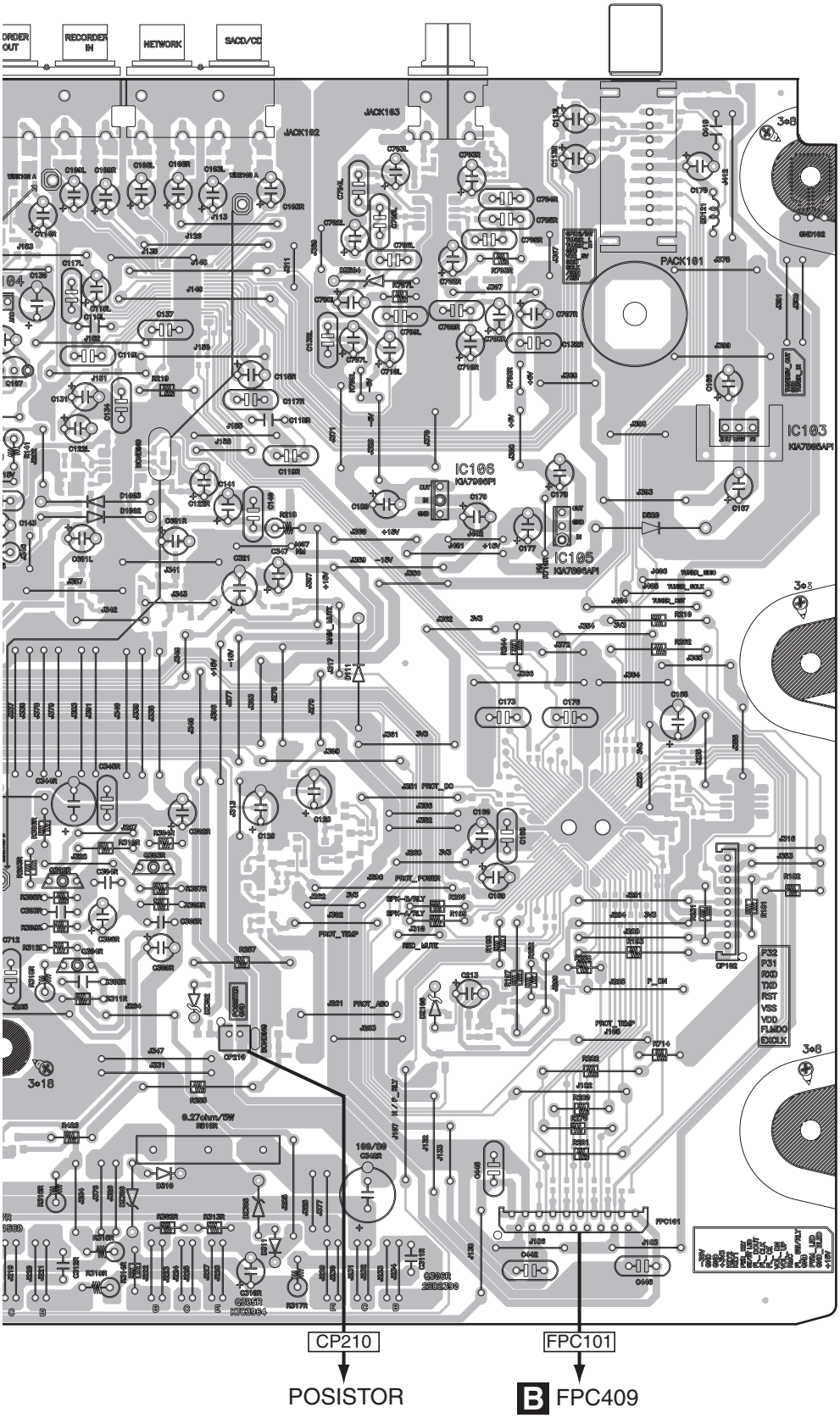

NOTE FOR PCB DIAGRAMS :

1. The parts mounted on this PCB include all necessary parts for several destinations. For further information for respective destinations, be sure to check with the schematic diagram.

2. View point of PCB diagrams.

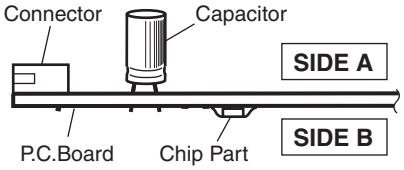

04			IC106	IC105	IC103
Q107	Q302R	Q303R			
	Q304R				
307R	Q305R	Q306R			

A

SIDE B

A MAIN ASSY

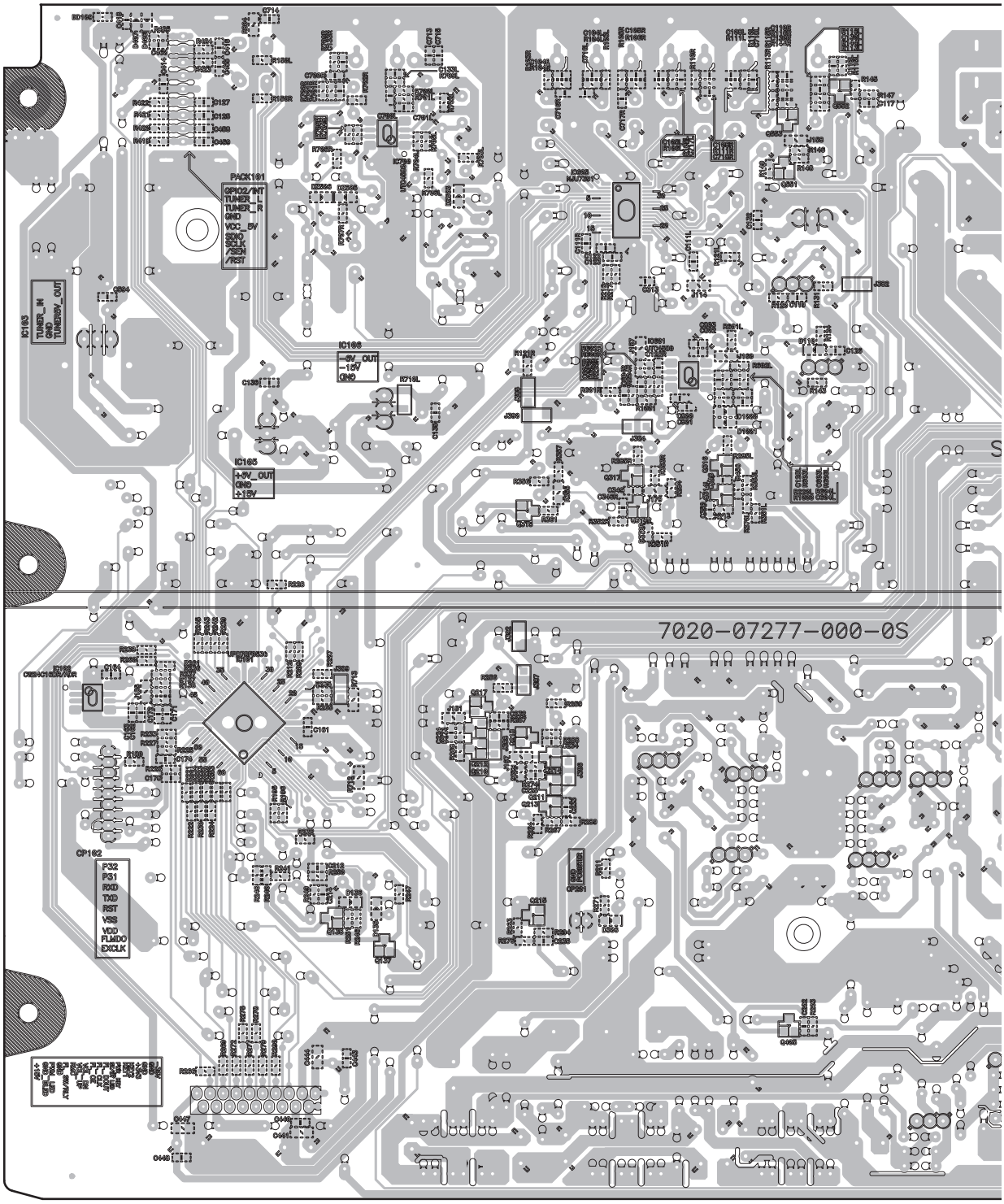

IC102

Q138 IC700 Q137

Q217 Q315
Q212 Q218 Q214
Q210 Q211
Q213
Q215

IC605 IC601 Q553 Q552
Q317 Q316 Q551
Q314R Q314L
Q405

A

SIDE B

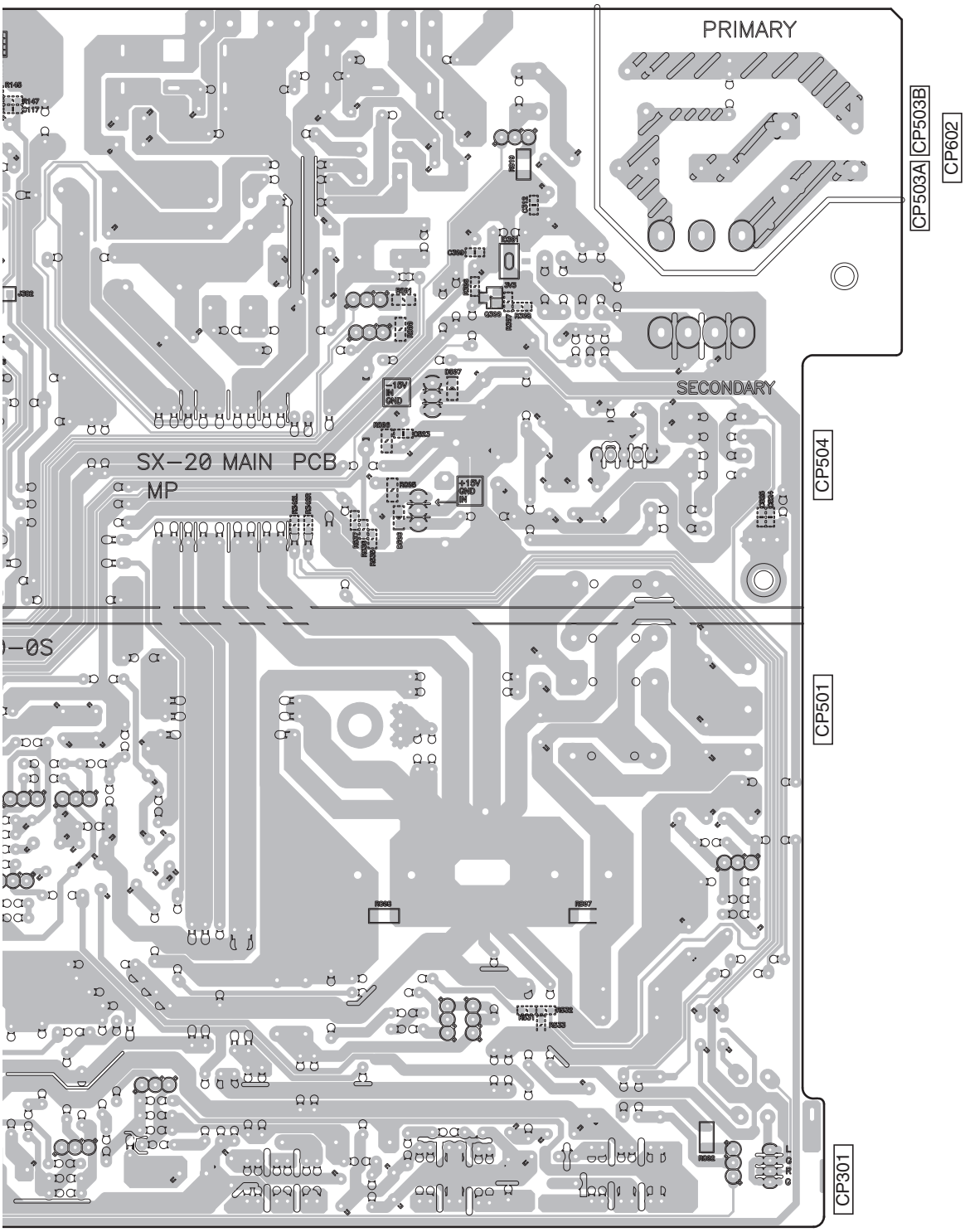

IC301
Q300

11.2 FRONT, POWER SW, HP, LED, RMC, SPK SW AB, GUIDE C and GUIDE R ASSYS

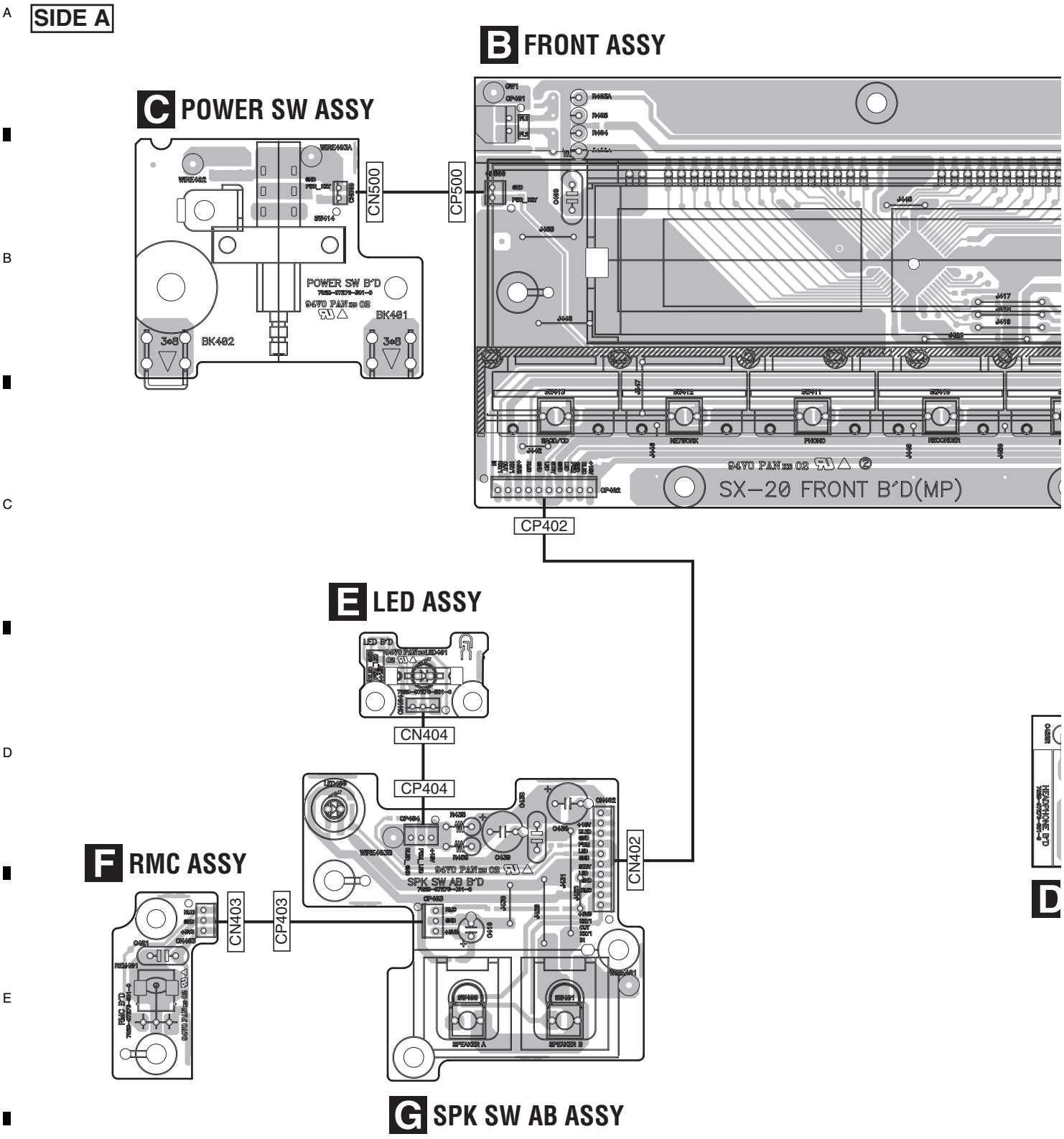

B C E F G

SIDE A

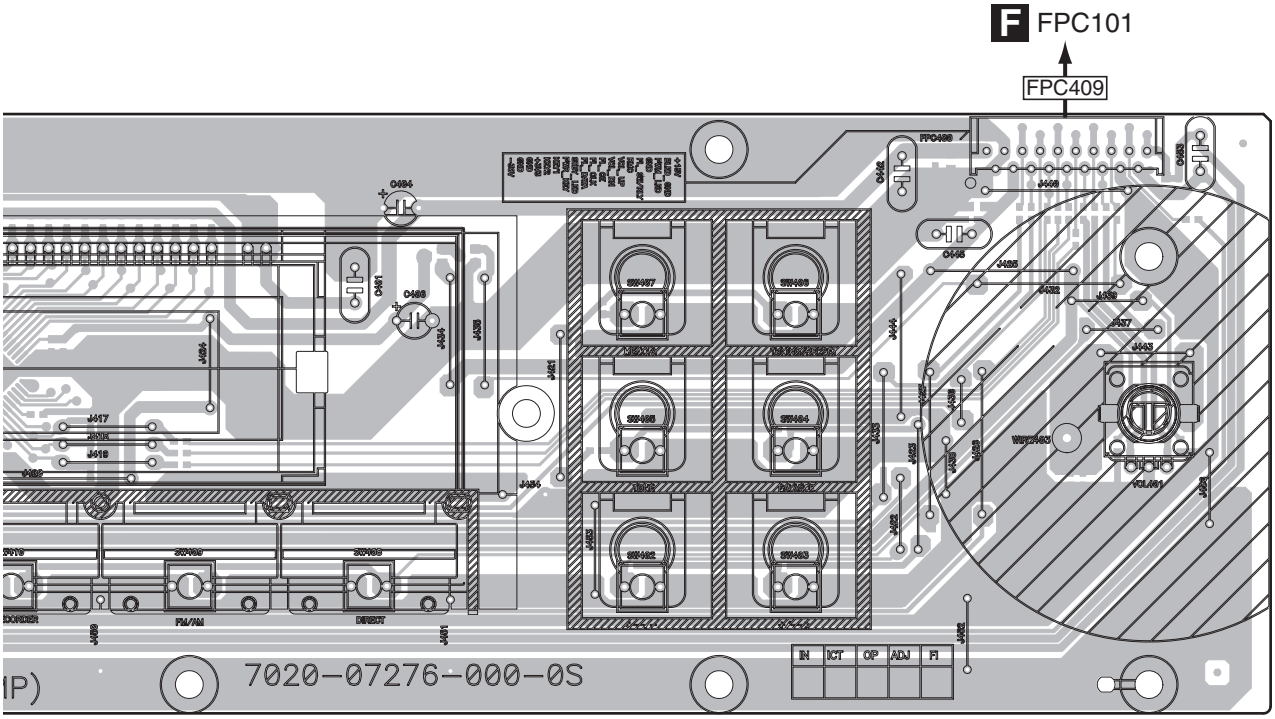

GUIDE C ASSY

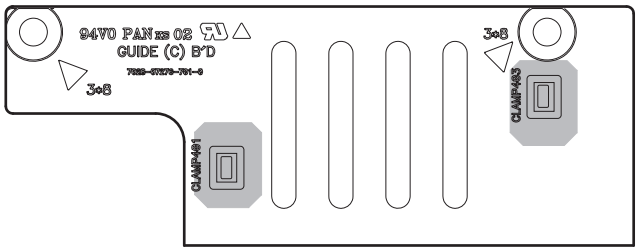

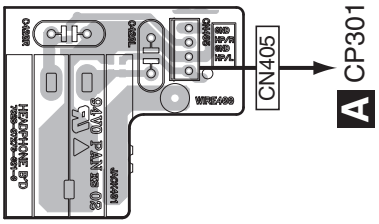

D HP ASSY

GUIDE R ASSY

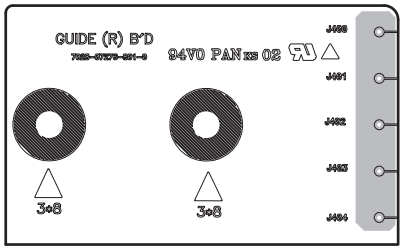

B D

SIDE B

B FRONT ASSY

FPC409

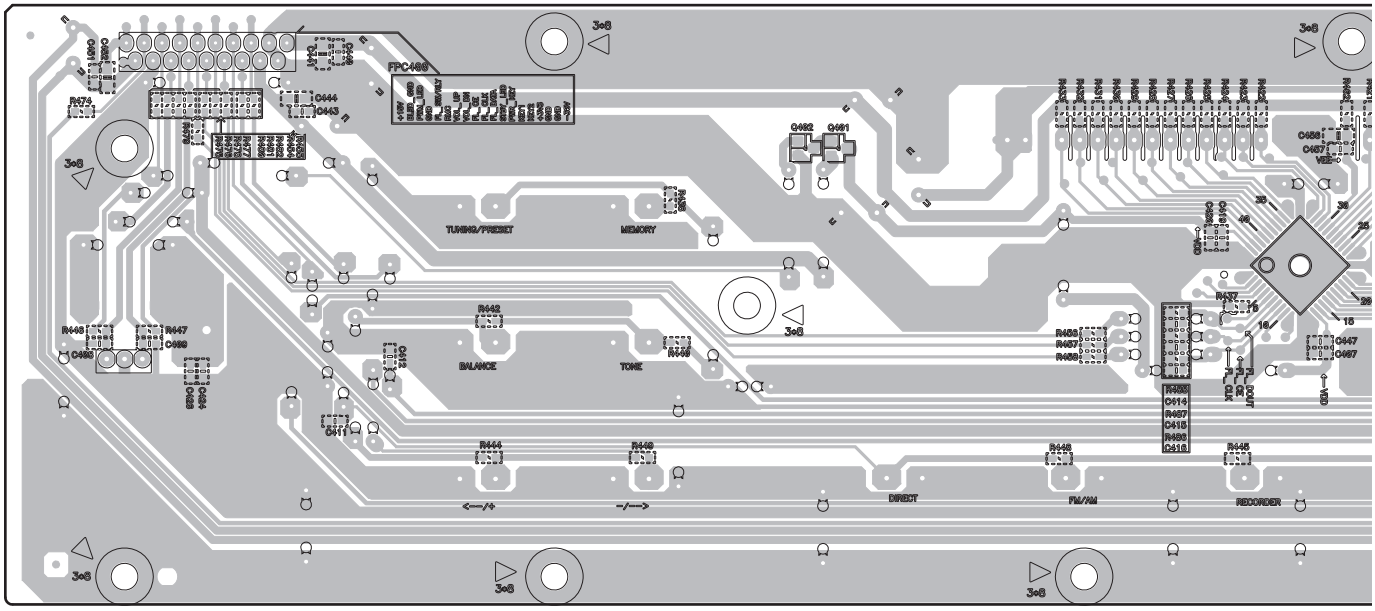

GUIDE C ASSY

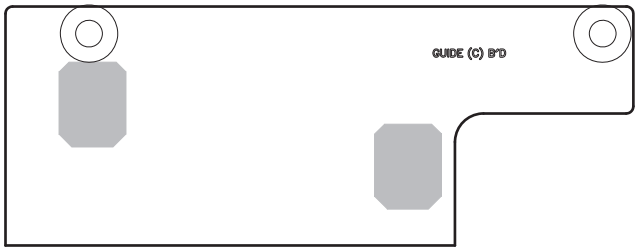

CN405

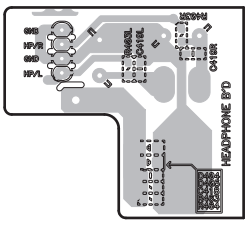

D HP ASSY

GUIDE R ASSY

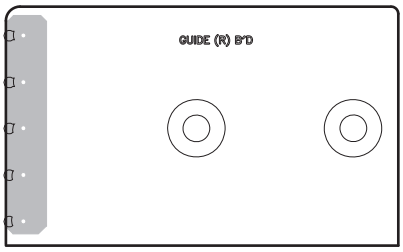

B D

SIDE B

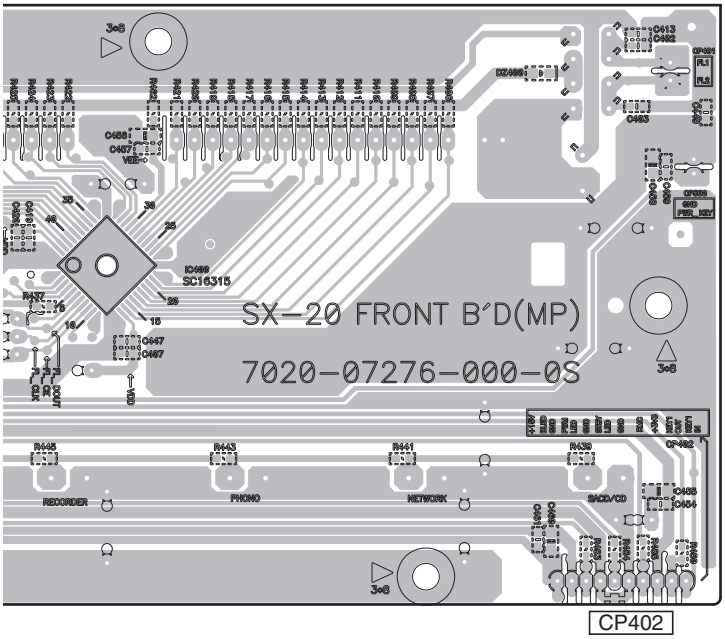

C POWER SW ASSY

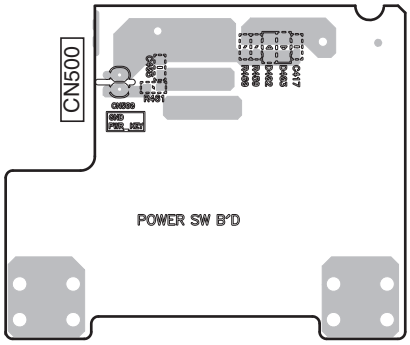

E LED ASSY

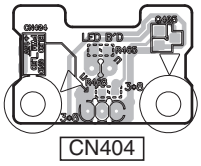

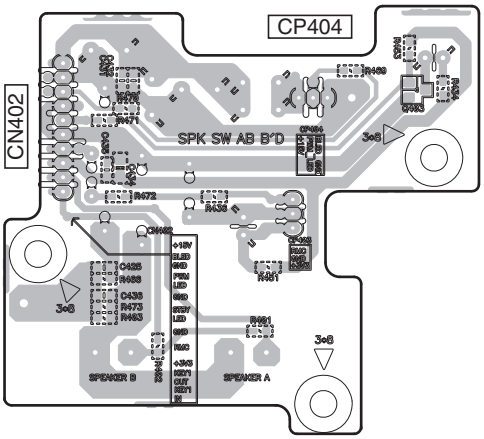

F RMC ASSY

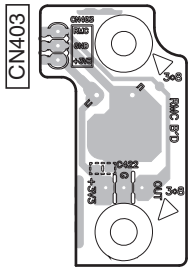

G SPK SW AB ASSY

B C E F G

12. PCB PARTS LIST

NOTES: ● *Parts marked by "NSP" are generally unavailable because they are not in our Master Spare Parts List.*

● *The ⚠ mark found on some component parts indicates the importance of the safety factor of the part. Therefore, when replacing, be sure to use parts of identical designation.*

● *When ordering resistors, first convert resistance values into code form as shown in the following examples.*

Ex.1 When there are 2 effective digits (any digit apart from 0), such as 560 ohm and 47 k ohm (tolerance is shown by J = 5%, and K = 10%).

560 Ω	→	56×10^1	→	561	RD1/4PU 5 6 1 J
47 kΩ	→	47×10^3	→	473	RD1/4PU 4 7 3 J
0.5 Ω	→	R50			RN2H R 5 0 K
1 Ω	→	1R0			RS1P 1 R 0 K

Ex.2 When there are 3 effective digits (such as in high precision metal film resistors).

5.62 kΩ	→	562×10^1	→	5621	RN1/4PC 5 6 2 1 F

● *Meaning of the figures and others in the parentheses in the parts list.*

Example) IC 301 is on the point (face A, 91 of x-axis, and 111 of y-axis) of the corresponding PC board.
IC 301 (A, 91, 111) IC NJM2068V

● *SCHEMATIC DIAGRAM and PCB CONNECTION DIAGRAM* → ● *PCB PARTS LIST*

QxxxL/R	→	Q0xxx	Fxxx	→	FU0xxx	LEDxxx	→	D8xxx
RxxxL/R/A	→	R0xxx	VOLxxx	→	S9xxx	REMxxx	→	U0xxx
PACKxxx	→	0xxx	FLTxxx	→	V0xxx			
JACKxxx	→	JA0xxx	SWxxx	→	S0xxx			
RLYxxx	→	RY0xxx	DZxxx	→	D9xxx			

LIST OF ASSEMBLIES

Mark	No.	Description	Part No.
NSP	1	PCB TTL ASSY MAIN	7025HK1204010-IL
	2	MAIN ASSY	7028072771010-IL
NSP	1	PCB TTL ASSY FRONT	7025HK1204011-IL
	2	FRONT ASSY	7028072761010-IL
	2	LED ASSY	7028072762010-IL
	2	POWER SW ASSY	7028072763010-IL
	2	SPK SW AB ASSY	7028072764010-IL
	2	RMC ASSY	7028072765010-IL
	2	HP ASSY	7028072766010-IL
	2	GUIDE C ASSY	7028072767010-IL
	2	GUIDE R ASSY	7028072768010-IL

A MAIN ASSY

SEMICONDUCTORS

Mark	No.	Description	Part No.
	IC	101	8952SS2000010-IL
	IC	102	J000241600170-IL
⚠	IC	103	J126780500110-IL
⚠	IC	104	J126780900020-IL
⚠	IC	105	J126780600130-IL
⚠	IC	106	J126790600030-IL
⚠	IC	301	J126111700041-IL
⚠	IC	502	J126781500000-IL
⚠	IC	503	J126791500030-IL
	IC	601	J121458001010-IL
	IC	605	J040739100010-IL
	IC	700	J121206800020-IL
	Q	302,303	J5000992F0050-IL
	Q	304,308	J5023206Y0050-IL
	Q	501	J5001273Y0050-IL
⚠	D	502-505,516-519	K000400700010-IL
⚠	D	515,523	K000013300520-IL
⚠	D	521,522	K000400700010-IL
⚠	D	525-528	K040540800011-IL

MISCELLANEOUS

Mark	No.	Description	Part No.
	JA	101,102 TER,RCA 4PIN	G6020421E070Y-IL
	JA	103 RCA JACK	G601207AE020Y-IL
	JA	104 TER,BOARD SCREW 8P	G614108V1020M-IL
	RY	301-303 RELAY	G680240502030-IL
⚠	RY	501 RELAY	G680060502010-IL
⚠	T	502 POWER TRANS	8200280150410-IL
		101 TUNER,FM/AM	E903104100780-IL
⚠	FU	101 FUSE GLASS TUBE 20MM	N751223151110-IL

RESISTORS

Mark	No.	Description	Part No.
	R	328,341	C060010065050-IL
	R	369,370,372,373	C141R10069010-IL
	R	510	C144R27069350-IL
	R	540,541	C060R22065050-IL

CAPACITORS

Mark	No.	Description	Part No.
	C	509,510	D04068208B000-IL
⚠	C	514	D00847208H010-IL
	C	517,536	D040102085030-IL

B FRONT ASSY

SEMICONDUCTORS

Mark	No.	Description	Part No.
	IC	400	J127163150010-IL
	Q	401	J5200107S0050-IL
	D	9400	K06606R24P400-IL

MISCELLANEOUS

Mark	No.	Description	Part No.
	V	400 DISPLAY,FLT	K530121300010-IL
	S	402-413 SWITCH	G180501000010-IL
	S	9401 SW,ENCODER	G121123070010-IL
		9999 HOLDER	432004078301A-IL

RESISTORS

Mark	No.	Description	Part No.
	R	400,403	C0604R7065050-IL

Mark	No.	Description	Part No.

C POWER SW ASSY

MISCELLANEOUS

S	414	SW,PUSH	G000121014110-IL

D HP ASSY

MISCELLANEOUS

JA	401	JACK,D6.5	G402PJ619AG0Y-IL

E LED ASSY

SEMICONDUCTORS

D	8401		K500036001450-IL

F RMC ASSY

MISCELLANEOUS

U	401	MODULE,REMOCON	E940349003810-IL

G SPK SW AB ASSY

SEMICONDUCTORS

D	8400		K500032001160-IL

MISCELLANEOUS

S	400,401	SWITCH	G180501000010-IL

PCB TTL ASSY FRONT

MISCELLANEOUS

		GUIDE R ASSY	7028072768010-IL
		GUIDE C ASSY	7028072767010-IL