Service Manual

FM Quartz Locked
STEREO RECEIVER

SX-3900

PIONEER®

MODEL SX-3900 COMES IN TWO VERSIONS DISTINGUISHED AS FOLLOWS:

Type	Voltage	Remarks
KU	120V only	U.S.A. model
S/G	110V, 120V, 220 and 240V (Switchable)	U.S. Military model

This service manual is applicable to the KU type. When repairing the S/G type, please see the additional service manual (see pages 47 – 56).

CONTENTS

1. SPECIFICATIONS 2
2. FRONT PANEL FACILITIES 4
3. BLOCK DIAGRAM 7
4. CIRCUIT DESCRIPTIONS
   - 4.1 FM Tuner Section 8
   - 4.2 AM Tuner Section 9
   - 4.3 Audio Section 9
   - 4.4 Display Circuits 11
   - 4.5 Protection Circuit 13
   - 4.6 Surge Current Suppressor 15
5. DISASSEMBLY 15
6. PARTS LOCATION 16
7. DIAL CORD STRINGING 18
8. ADJUSTMENTS
   - 8.1 Audio Section 19
   - 8.2 Tuner Section 20
9. SCHEMATIC DIAGRAM 24
10. P.C. BOARDS CONNECTION DIAGRAM 29
11. PARTS LIST 35
12. EXPLODED VIEW 41
13. PACKING 46

ADDITIONAL SERVICE MANUAL FOR S/G TYPE . 47

1. SPECIFICATIONS

Power Amplifier Section

Continuous Power Output of 120 watts* per channel, min., at 8 ohms from 20Hertz to 20,000 Hertz with no more than 0.005% total harmonic distortion.

Total Harmonic Distortion (20 Hertz to 20,000 Hertz, 8 ohms)
- continuous rated power output . . No more than 0.005%
- 60 watts per channel power output . . . . . No more than 0.005%

Intermodulation Distortion (50 Hertz : 7,000 Hertz = 4 : 1)
- continuous rated power output . . No more than 0.005%
- 60 watts per channel power output . . . . . No more than 0.005%

Frequency Response
. . . . . 5 Hertz to 200,000 Hertz $^{+0}_{-3}$ dB

Input Sensitivity/Impedance (POWER AMP IN)
. . . . . 1V/50 kilohms

Output
- Speaker . . . . . A, B, A+B

Damping Factor (20 Hertz to 20,000 Hertz, 8 ohms)
. 60

Hum and Noise (IHF, short-circuited, A network)
. . . . . 115dB

Preamplifier Section

Input (Sensitivity/Impedance)
- PHONO 1, 2. . . . . 2.5mV/50 kilohms
- AUX, TAPE PLAY 1, 2, ADAPTOR IN . . . . . 150mV/50 kilohms

Phono Overload Level (T.H.D. 0.005%, 1,000 Hertz)
- PHONO 1, 2. . . . . 300mV

Output (Level/Impedance)
- TAPE REC 1, 2, ADAPTOR OUT 150mV
- PREAMP OUT (R_L : 50 kilohms) . . . . . 1V/1 kilohms (Volume: max.)

Total Harmonic Distortion (20 Hertz to 20,000 Hertz)
- PHONO 1, 2 (REC OUT) . . . . . No more than 0.005% (10V output)

AUX, TAPE PLAY 1, 2, ADAPTOR IN
. . . . . No more than 0.005% (10V output)

Frequency Response
PHONO (RIAA Equalization)
. . . . . 20 Hertz to 20,000 Hertz ±0.2dB

AUX, TAPE PLAY 1, 2, ADAPTOR OUT
. . . . . 7 Hertz to 80 000 Hertz $^{+0}_{-1}$ dB

Tone Control
BASS . . . . . ±4dB/±7dB (100Hz)
Turnover Frequency: 200Hz/400Hz
TREBLE . . . . . ±9dB/±7dB (10kHz)
Turnover Frequency: 2kHz/4kHz

Filter
LOW . . . . . 15Hz (−6dB/oct.)
HIGH . . . . . 8kHz (−6dB/oct.)

Loudness Contour (Volume control set at −40dB position)
. . . . . +6dB (100Hz), +3dB (10 000Hz)

Hum and Noise (IHF, short-circuited, A network)
PHONO 86dB
AUX, TAPE PLAY 1, 2, ADAPTOR IN 105dB

Attenuator . . . . . −20dB

FM Tuner Section

Usable Sensitivity (IHF) 9.8dBf (1.7μV)

50dB Quieting Sensitivity
MONO 14.2dBf (2.8μV)
STEREO 36dBf (34.7μV)

Signal-to-Noise Ratio
MONO . . . . . 83dB (at 65dBf)
STEREO . . . . . 78dB (at 80dBf)

Distortion (at 65dBf)
MONO 100Hz 0.1%
1kHz 0.07%
6kHz 0.1%
STEREO 100Hz 0.2%
1kHz 0.15%
6kHz 0.2%

Capture Ratio 1.0dB

Alternate Channel Selectivity
400kHz 80dB

Stereo Separation
1kHz 50dB
30Hz to 15kHz 35dB

Frequency Response
. . . . . 20Hz to 15kHz $^{+0.2}_{-0.8}$ dB

Spurious Response Ratio 100dB
Image Response Ratio 90dB
IF Response Ratio 100dB
AM Suppression Ratio 60dB
Subcarrier Product Ratio 64dB
SCA Rejection Ratio 64dB
Muting Threshold 19.2dBf (5μV)
Antenna Input . . . . . 300 ohms balanced, 75 ohms unbalanced.

AM Tuner Section

Sensitivity (IHF, Ferrite antenna) . . 300μV/m
(IHF, Ext. antenna) . . . 15μV
Selectivity 30dB
Signal-to-Noise Ratio 50dB
Image Response Ratio 40dB
IF Response Ratio 40dB
Antenna . . . . . Ferrite loopstick antenna

Audio Section

Output (Level/Impedance)
FM (100% Mod.) . . . . . 650mV/2.4 kilohms
AM (30% Mod.) . . . . . 200mV/2.4 kilohms

Semiconductors

ICs 15
FETs 6
Transistors 89
Diodes 62

Miscellaneous

Power Requirements . . . . . AC 120V, 60Hz
Power Consumption . . . . . 350W (UL)
Dimensions . . . . . 526(W) x 176(H) x 452(D) mm
20-11/16(W) x 6-15/16 (H) x 17-14/16(D) in
Weight (without package) 20kg (44lb 2oz)

Furnished Parts

Operating instructions 1
FM T-type antenna 1

** Measured pursuant to the Federal Trade Commission's Trade Regulation rule on Power Output Claims for Amplifiers.*

NOTE:
Specifications and the design subject to possible modifications without notice due to improvements.

2. FRONT PANEL FACILITIES

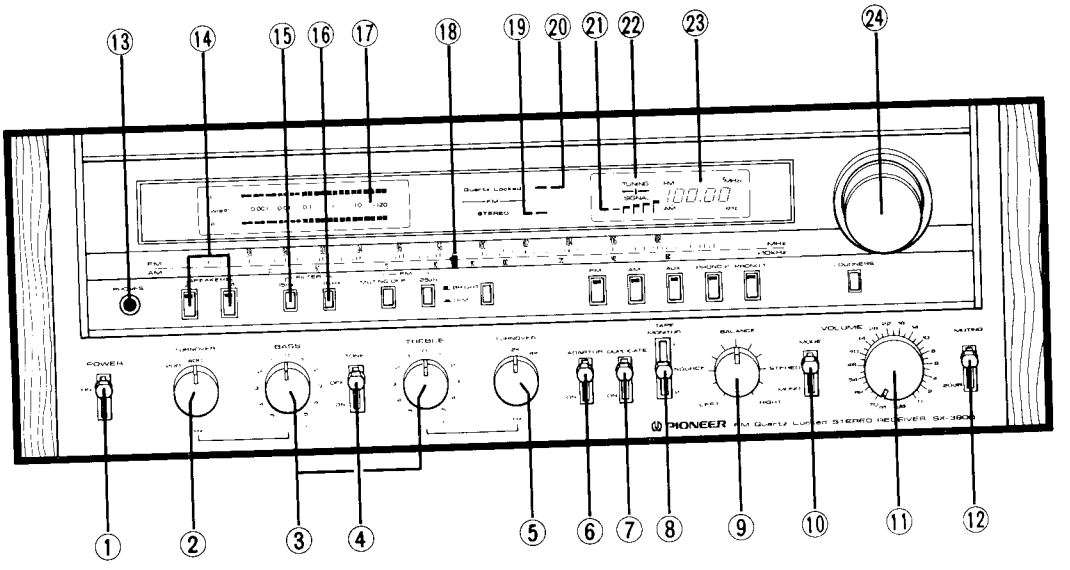

① POWER SWITCH

Set this switch to ON to supply power to the receiver. There will be a short delay when it is set to ON, because the muting circuit has been actuated to suppress the unpleasant noise that is sometimes generated when the power is switched on and off.

② BASS TURNOVER SWITCH

Use this switch to change over the frequency in which the sound adjustment with the bass control is starting to take effect. Select 200Hz or 400Hz in accordance with the characteristics of your listening room and of your speakers, and with your general preference.

③ BASS AND TREBLE CONTROLS

Use these controls to adjust the bass and the treble. If you set the tone switch to ON and turn the bass control to the right from its center position, you will be able to emphasize the sound in a frequency range which is lower than that selected by the bass turnover switch. Conversely, turning this control from the center position to the left will attenuate the sound.
You can use the treble control to adjust the sound in a frequency higher than that selected by the treble turnover switch.

④ TONE SWITCH

Set this switch to ON when adjusting the bass and treble controls. When set to the OFF position, the tone control circuits are disengaged and frequency response is flat. This function is convenient for checking phono cartridge and speaker tone quality and listening room acoustics.

⑤ TREBLE TURNOVER SWITCH

Use this switch to change over the frequency in which the sound adjustment with the treble control is starting to take effect. Select 2kHz or 4kHz in accordance with the characteristics of your listening room and of your speakers, and with your general preference.

⑥ ADAPTOR SWITCH

Set this switch to ON when reproducing sound from an optional component which is connected to the ADAPTOR jacks. Always set it to the upper position if you are not using a component with these terminals.

⑦ TAPE DUPLICATE SWITCH

Set this switch to ON when you want to duplicate or edit a pre-recorded tape using two tape decks.

⑧ TAPE MONITOR SWITCH

Employ for tape playback or to monitor a recording in progress.

1: Playback or monitoring of a tape deck connected to the TAPE 1 jacks.

SOURCE: Be sure to set to this position when not using the tape deck for playback and monitoring.

2: Playback or monitoring of a tape deck connected to the TAPE 2 jacks.

NOTE:
When listening to records or broadcasts, be sure to set this switch to SOURCE. Sound will not be obtained from speakers if it is set to 1 or 2.

⑨ BALANCE CONTROL

Use this control to balance the volume of the left and right channels. First, however, set the mode switch to MONO. If the sound appears to be louder on the right, it means that the volume of the right channel is higher. Turn the balance control to the left and adjust. Conversely, if the sound appears to be louder on the left, it means that the volume of the left channel is higher. Therefore, turn the balance control to the right and adjust. After adjusting, return the mode switch to STEREO.

⑩ MODE SWITCH

Use this switch for selecting mono or stereo performances.

STEREO: Set to this position for normal operations.

MONO: When set to this position, the left and right channel signals will be mixed and reproduced monophonically from both speaker systems.

⑪ VOLUME CONTROL

Use this control to adjust the output level to the speakers and headphones. Turn it clockwise to increase the output level. No sound will be heard if you set it to ∞. The scale is graduated in dB which indicate the attenuation when the maximum output level is 0dB.

⑫ MUTING SWITCH

Set this switch to the −20dB position to attenuate the audio output indicated by the volume control by 20dB. There is no need to adjust the volume control if you use this switch when turning down the audio output temporarily and when changing over records or tapes.

⑬ HEADPHONE JACK

Plug the headphones into this jack when you want to listen through your stereo headphones.

Release both speaker switches if you want to listen to the sound through your headphones only.

⑭ SPEAKER SWITCHES

Depress the switch corresponding to the speakers connected to the SPEAKERS terminals (A or B) on the rear panel.

You can depress both of these buttons to listen to the sound from two pairs of speaker systems at the same time.

⑮ LOW FILTER SWITCH (15Hz)

Depress this switch in the event that turntable rumble, recording cutting noise or other low frequency noise becomes objectionable. Attenuation in the frequency band below 15Hz is 6dB/octave.

⑯ HIGH FILTER SWITCH (8kHz)

Depress this switch if record scratch noise or other high frequency noise becomes objectionable. Attenuation in the frequency band above 8kHz is 6dB/octave.

⑰ POWER METER

This meter allows you to read out the rated power level on the fluorescent display tube when speakers with a nominal impedance of 8 ohms are connected to the speaker terminals.

⑱ DIAL POINTER

This pointer indicates the broadcasting stations.

⑲ FM STEREO INDICATOR

This indicator lights up when receiving an FM stereo program if the FM muting off switch is released.

⑳ QUARTZ LOCKED INDICATOR

This indicator lights up after the optimum tuning point has been obtained and displays that the receiving state is stabilized by the built-in quartz lock circuit.

㉑ SIGNAL INDICATOR

This indicator lights in sequence from left through right during the tuning of an AM or FM broadcast in accordance with the strength of the signals being received. The optimum tuning point is where the maximum number of indicators light.

㉒ TUNING INDICATOR

When tuning in an FM station, the optimum reception point is indicated when the center indicator lights up. When the left indicator has come on, rotate the tuning knob slightly clockwise. When the right indicator comes on, rotate the knob slightly counter-clockwise.

㉓ FREQUENCY DISPLAY

This indicates the frequency which is tuned.

With FM reception, the letters "FM" appear on the left of the display and "MHz" on the right. With AM reception, "AM" appears on the left and "kHz" on the right. These change when the function selector position is changed.

㉔ TUNING KNOB

Use this knob to tune in to broadcasting stations.

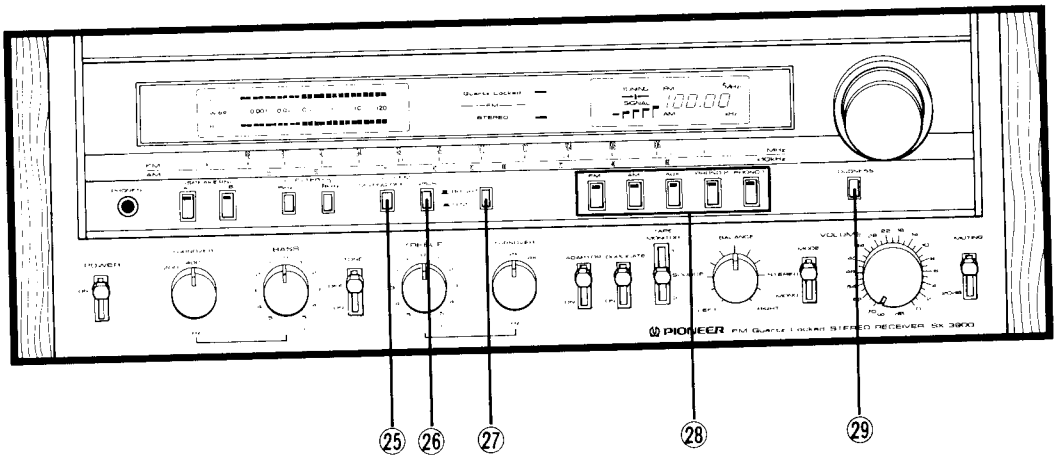

㉕ FM MUTING OFF SWITCH

When this switch is released and an FM broadcast tuned in, the muting circuit is activated inside to suppress the annoying interstation noise between the broadcasting frequencies for noise-free reception. When the broadcasting station is far away or when receiving a station in a fringe area, set the switch to the OFF position and then tune in. If there is a broadcasting station with a strong signal level on the air next to a station whose program you want to receive, you may not be able to tune in satisfactorily because the sound will be drowned out by the stronger signals. In cases like this, set the FM MUTING OFF switch to OFF (depressed position) and tune in. The muting circuit does not work when the tuner is receiving AM broadcasts. If tuning has been performed after the FM MUTING OFF switch has been depressed and a station selected, the quartz locked circuit is set to the OFF mode and the LOCKED indicator does not light.

㉖ FM 25μS SWITCH

Depress this switch when listening to a Dolby* FM broadcast; otherwise keep this switch at the released position.

㉗ BRIGHTNESS SELECTOR

Use this switch to select the brightness of the power meter and the frequency display.

BRIGHT: When using the receiver in daylight or other bright locations.

DIM: At night or in dark locations when the existing brightness is too high.

㉘ FUNCTION SELECTOR

Depress the function switch which corresponds to the program source. Turn the volume control down first before selecting a different function switch while the sound from one program source is being reproduced.

FM: Depress this switch for FM broadcasts.

AM: Depress this switch for AM broadcasts.

AUX: Depress this switch when listening to an audio component connected to the AUX jacks.

PHONO 2: Depress this switch when playing a record on the turntable connected to the PHONO 2 jacks.

PHONO 1: Depress this switch when playing a record on the turntable connected to the PHONO 1 jacks.

NOTE:
Only one function switch should be depressed at a time.

㉙ LOUDNESS SWITCH

When listening to a performance with the volume control turned down, depress this switch and the bass and treble will be accentuated.

When the volume is low, the human ear finds it harder to hear the bass and treble than when the volume is high. The loudness switch is thus designed to compensate for this deficiency. By depressing this switch, the bass and treble come through much more strongly and the sound takes on a punch even when the volume control is turned down.

* The word "Dolby" is a trademark of Dolby Laboratories Inc.

3. BLOCK DIAGRAM

Tuner Section

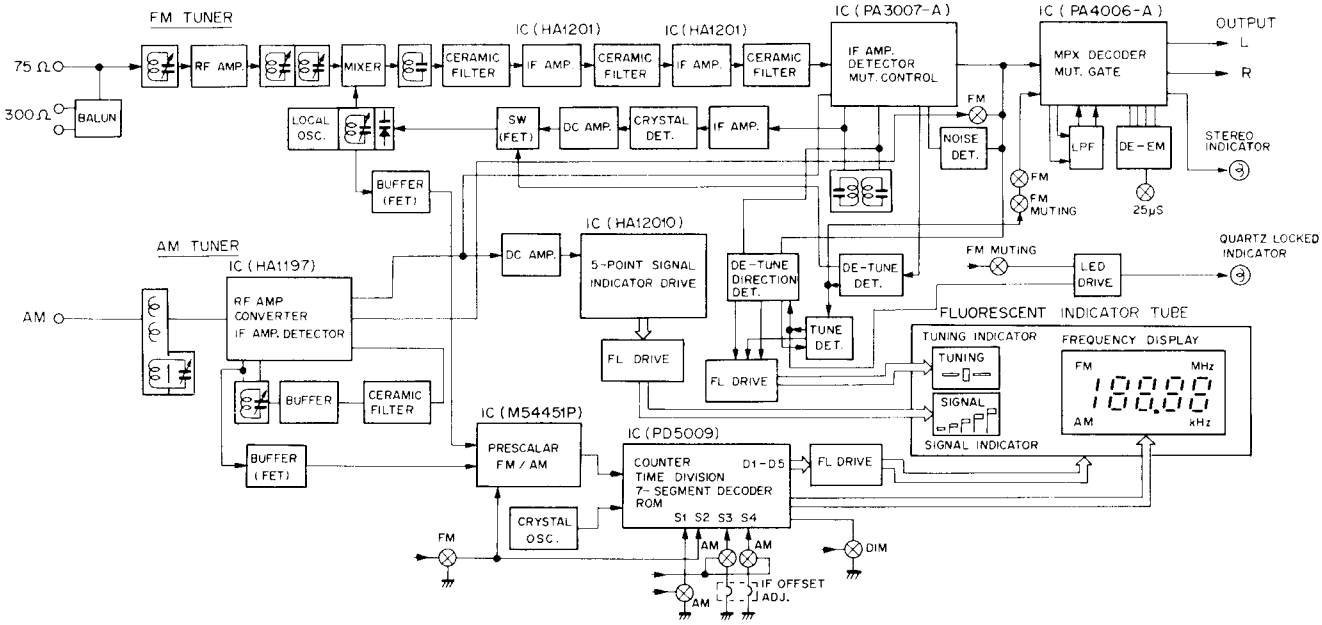

Audio Section

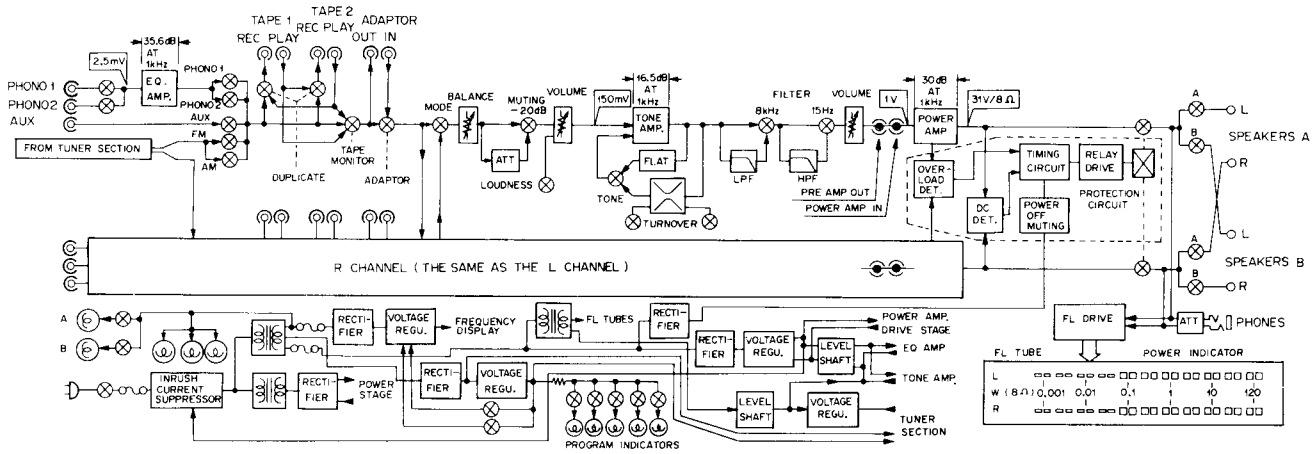

4. CIRCUIT DESCRIPTIONS

4.1 FM TUNER SECTION

Front End

The FM front end of SX-3900 includes a 4 ganged tuning capacitor, a dual-gate MOS FET-equipped 1-stage RF amplifier, and a modified Clapp circuit local oscillator. This oscillator is a voltage controled oscillator employing a vari-cap (variable capacitance diode). When the quartz-lock system (refer to "Quartz-lock system") is not in operation, a constant voltage is applied to the diode.

IF Amplifier and Detector

These employ 3 ICs and 3 dual-element ceramic filters. The IC (HA1201) of the first 2 stage constitutes a single-stage differential amplifier current-limiting limiter. The IC (PA3007-A) in the third stage, an improvement on the former IF system IC (PA3001-A), includes an IF limiter amplifier, quadrature detector, meter drive, and other circuits. Performance in terms of distortion, S/N ratio, delay characteristics, and other parameters, shows a marked improvement in comparison to the PA3001-A.

Quartz-Lock System

The quartz-lock system featured in the SX-3900 stereo receiver is a frequency servo control system employing a crystal resonator. Any displacement in the intermediate frequency (IF) is detected as a DC voltage by the discriminator (equipped with a crystal resonator), resulting in the local oscillator frequency being corrected and subsequently locked. This extremely stable frequency servo control system thus ensures that tuned frequencies remain tuned securely for as long as required.

When the IF signal appears at pin no.17 of the IF system IC (PA3007-A), it is amplified and applied to a crystal detector (see Fig. 4-1) which consists of diodes connected in parallel in a series resonance circuit equipped with a crystal resonator. The resonance frequency is the same as the IF frequency (10.7MHz), which means the impedance at this time will be minimal, resulting in the output being reduced to a minimum level. If the input frequency increases, the reactance of the capacitance stage (C) is reduced, and the reactance of the inductance stage (L) increased, resulting in AM detection by D2 which leaves the positive portion of the IF signal. If the input frequency decreases, L stage reactance is decreased and C stage reactance increased, resulting in AM detection by D1 which leaves the negative portion of the IF signal. The L stage and C stage reactances increase as the degree of detuning in the respective directions is increased, resulting in a subsequent increase in the detector output. By thus attaining S-curve characteristics, FM detection becomes possible. Since the IF signal is an FM signal frequency deviation due to modulation, it will be symmetrical about a central axis. And if the central frequency is equal to the resonance frequency, the detector output DC level will be zero. If, however, there is any displacement in the central frequency, frequency deviation in respect to the detector will become asymmetrical, resulting in the generation of a DC voltage. This DC voltage is passed through LPF1 (IF filter) and LPF2 (AC filter) to form a correction voltage which is applied to the variable capacitance diode in the local oscillator, thereby correcting the oscillator frequency to obtain a constant IF (i.e. a constant tuned frequency).

Since the central frequency of the crystal detector is regulated by the crystal resonator, tuned frequencies of extremely high stability are obtained.

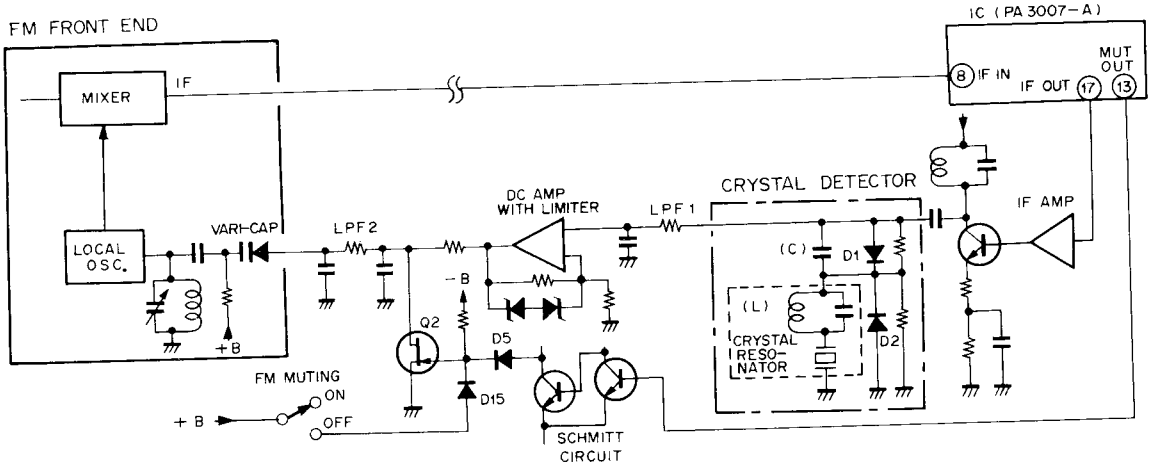

Fig. 4-1 Quartz Lock System

- **Limiting the Locking Range**

If the quartz-lock range is too wide, it will overlap with strong adjacent broadcasting frequencies and result in considerable tuning difficulties. A DC amplifier is therefore used as a limiter (limiter action by NFB circuit zener diodes) which restricts the voltage applied to the variable capacitance diode, thereby limiting the quartz-lock range.

A DC voltage appears at pin no.13 of the IF system IC (PA3007-A) when the antenna input level drops below 5μV, or when the tuned frequency has been detuned by more than ±100kHz. This DC voltage (FM muting signal) is applied to the gate of Q2 (FET) via a Schmitt circuit, resulting in the FET being turned on, and the quartz-lock circuit being turned off.

Multiplex Decoder

The recently developed multiplex decoder IC (PA4006-A) combines MPX decoding with muting functions in a single IC, thereby handling the functions of the more conventional MPX IC (PA1001-A) and AF MUTING IC (PA1002-A).

Distortion ratings and S/N ratio have been further improved by incorporating a chopper type MPX decoder. The chopper type switching circuit (see Fig. 4-2) operates by switching the signal either to ground or to the through circuit, thereby eliminating the generation of unwanted noise or distortion. Furthermore, since the PA4006-A features DC direct-coupled switching with the detector, there is no deterioration in separation at the low frequency end.

Besides the decoder and muting circuits, the PA4006-A also incorporates the pilot signal canceller, stereo auto selector, VCO killer circuit, MUT amplifier, and MUT control circuit.

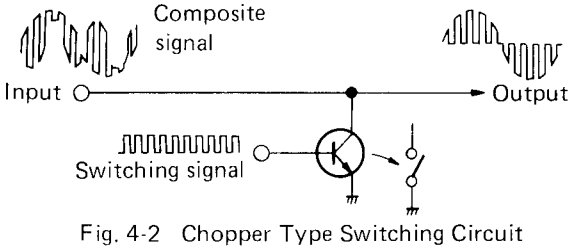

Fig. 4-2 Chopper Type Switching Circuit

4.2 AM TUNER SECTION

The AM tuner section consists of a 2-ganged tuning capacitor plus an IC (HA1197) which contains a 1-stage RF amplifier, converter, 2-stage IF amplifier, detector, and AGC circuit.

The AM STEREO OUT terminal on the rear panel is for connecting to an AM stereo broadcast decoder adaptor. The signal appearing at this terminal is the converter output passed via a buffer (emitter-follower) stage.

4.3 AUDIO SECTION

Phono Equalizer Amplifier

Fig. 4-3 shows the basic configuration of the circuit. An S-N ratio of 86dB (at 2.5mV input, IHF-A) has been achieved by using a ultra-low-noise PNP transistor (2SA978) at the first stage, and reducing the signal source resistance and equalizer element impedance. High voltage gain is provided in the following stage by a bootstrap circuit. The output stage is a complementary symmetrical SEPP circuit. The high voltage utility factor of the SEPP circuit provides a high maximum output voltage. Dynamic range of the equalizer amplifier is therefore wide and overload input level at 0.005% distortion is 300mV (rms at 1kHz).

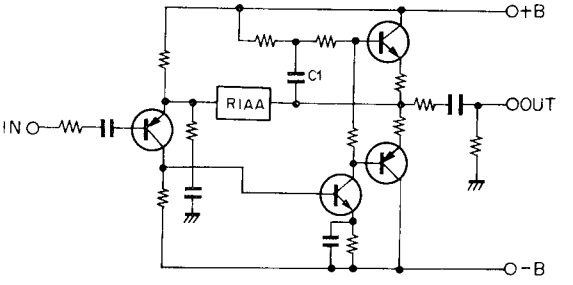

Fig. 4-3 Phono Equalizer Amplifier

Tone Control

Fig. 4-4 shows the basic configuration of the circuit. This circuit is an NFB type tone control with IC (HA12017P).

Tone control (BASS, TREBLE) is accomplished by providing the tone amplifier NFB circuit with a frequency selective characteristic. The capacitance of C1 — C4 are changed by the TURNOVER switches (by adding another capacitors in parallel) to provide selection of the frequency.

The NFB circuit is changed to a flat frequency characteristic when the TONE switch in the OFF position.

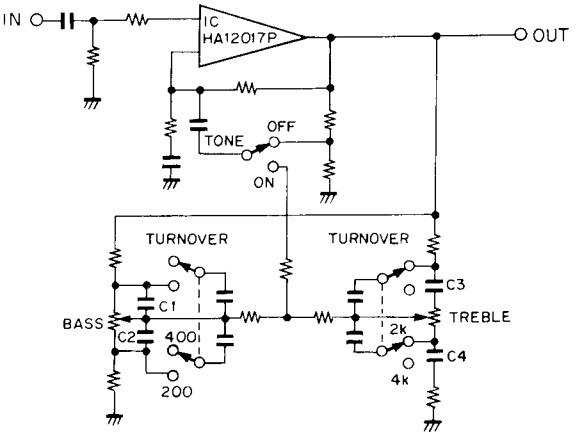

Fig. 4-4 Tone Control Circuit

Power Amplifier Section

- **Amplifier Circuit**

The basic circuit arrangement of the power amplifier is shown in Fig. 4-5. The first stage is a differential amplifier comprising PNP twin transistor (Q2), the load circuit of which is a current mirror employing an NPN twin transistor (Q3). The current mirror provides push-pull operation in this stage, which serves to cancel even harmonics and further increase gain.

Q1 in the input circuit absorbs outflow of base current from Q2, and prevents the generation of a DC voltage. Because Q1 follows any temperature drift in Q2, temperature drift of the center point voltage is prevented.

The pre-driver stage (Q4, Q5) is a Darlington arrangement, the load circuit of which employs a constant-current source (Q6) resulting a high voltage gain.

The power stage bias voltage is supplied by the high speed bias servocontrol circuit. The high speed bias servocontrol circuit provides non-switching operation in the power stage (refer to "High Speed Bias Servocontrol Circuit").

The power stage (Q7 — Q12) is a 2-stage Darlington arrangement, the final stage is parallel SEPP circuit. Because there is no time constant in the NFB circuit in the low frequency region, amplification is possible down to DC (DC inputs will be cut off, however, by the input coupling capacitor).

- **High Speed Bias Servocontrol Circuit**

By operating the power stage only within the active region (no possible cut-off) and with minimum idle current, the high speed bias servocontrol circuit prevents the generation of switching distortion and reduces heat loss.

This circuit is outlined in Fig. 4-6. When there is no signal applied to the circuit, Q1 and Q2 are almost cut off, while Q3 and Q4 will be on. The voltage across the collector and base of both of these transistors (Q3 and Q4) at this time may be disregarded. Consequently, with the power stage bias circuit consisting of 4 PN junctions formed by Q3, D3 and Q4, and VR1.

With R1 and D1 ensuring a constant flow of current, the base of Q1 and point X may be brought to the same level on an AC basis (level fluctuations due to the signal) by a simple shift in DC level. Furthermore, Q1 may be considered emitter-follower with R3 as the emitter resistance.

When the voltage across points Y and X is increased by the positive portion of the signal applied to this circuit, it becomes the input signal of this emitter-follower (Q1). Since the emitter-follower voltage gain is practically 1, a voltage more or less equal to that of the input signal (that is, the voltage increase across points Y and X) is produced at R3. And the R3 voltage is the voltage applied across the base and collector of Q3 which forms part of the power stage bias circuit. So the bias voltage applied to Q3 will be in excess by the same amount the voltage across points Y and X increased (by positive portion of the signal) above the voltage level when no signal is being applied. Consequently, the increase in voltage across points Y and X cancels the decrease in voltage across points X and Z, thereby maintaining the idle current without cutting the PNP power

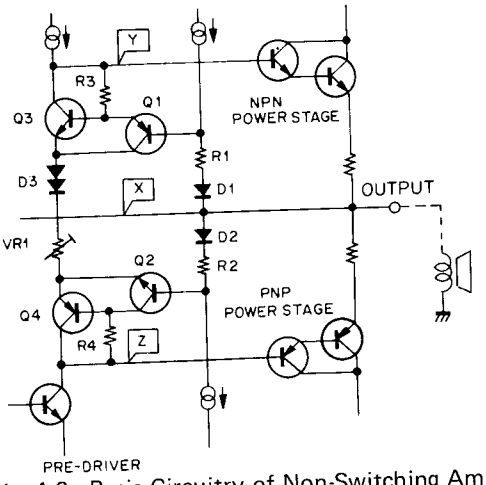

Fig. 4-6 Basic Circuitry of Non-Switching Amplifier

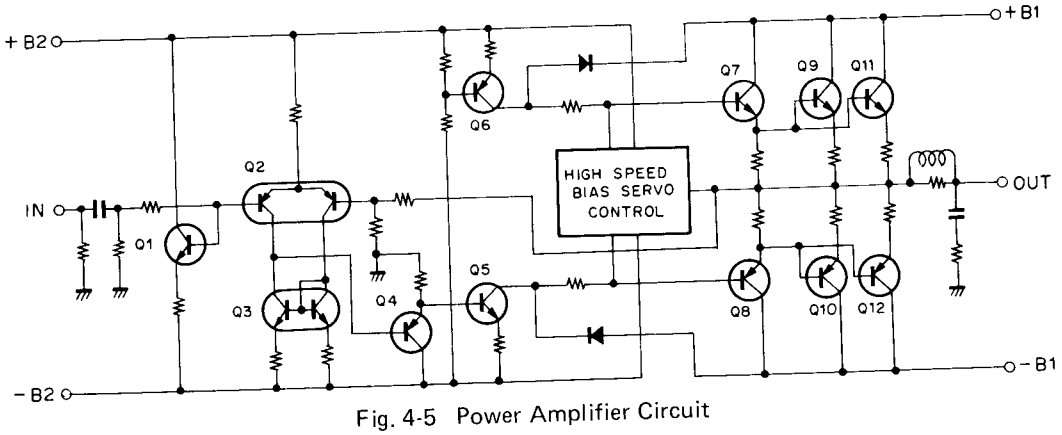

Fig. 4-5 Power Amplifier Circuit

stage off (noting that there actually is a slight decrease in current). For the negative portions of the signal, Q2 and Q4 are operated in the same manner, thereby preventing the NPN power stage from being cut off.

4.4 DISPLAY CIRCUIT

Power Indicator Circuit

The SX-3900 output power indicators feature fluorescent indicator tube (FL tube). In this tube, thermionic emissions from the cathode are accelerated into the fluorescent substance of the segmental anodes, resulting in the emission of light. This tube is used to indicate numerals, letters and other symbols.

An outline of the FL tube drive circuit is shown in Fig. 4-7. The output circuit signal is first passed through a low-pass filter and a compressor circuit before being applied to pin no.6 (4) of the IC (TA7318P-A). The compressor circuit makes use of the non-linearity of rising portion of the diode's Vd-Id characteristics to contract the signal dynamic range by 20dB. The IC contains a detector circuit, compressor (40dB), and peak hold circuit for both left and right channels. The dynamic range of the signal is thus contracted by 60dB to obtain a "peak held" DC voltage.

The output power indicator segments of the FL tube are driven by the HA12010 ICs (one for each channel) equipped with 12 pairs of voltage comparators. These comparators are biased at increasing levels, so each comparator will commence to operate separately as the input level increases. And since these comparators apply the voltages to the output power indicator segments, each successive segment will light up in turn as the input level rises.

Frequency Display

Frequencies received by the SX-3900 are displayed in digital form by fluorescent indicator tube (FL tube). Each digit employs up to 7 segments (a ~ g) (see Fig. 4-8) to display all numerals from 0 to 9 (with the exception of the left hand digit which employs only 2 segments b and c).

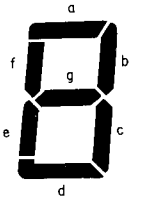

Fig. 4-8 7-Segment Digit Display

The signal source during both AM and FM reception is the local oscillator. The signal is passed via a buffer amplifier (FET) to the prescalar IC (M54451P) where it is subjected to frequency division (1/8 for AM and 1/80 for FM) before being applied to the frequency counter IC (PD5009). This IC is responsible for the dynamic drive of the 7-segment 5-digit display (each digit being turned on according to time-shared sequential scanning).

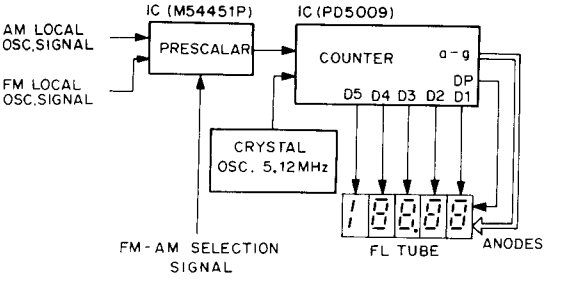

Fig. 4-9 Frequency Display Circuit

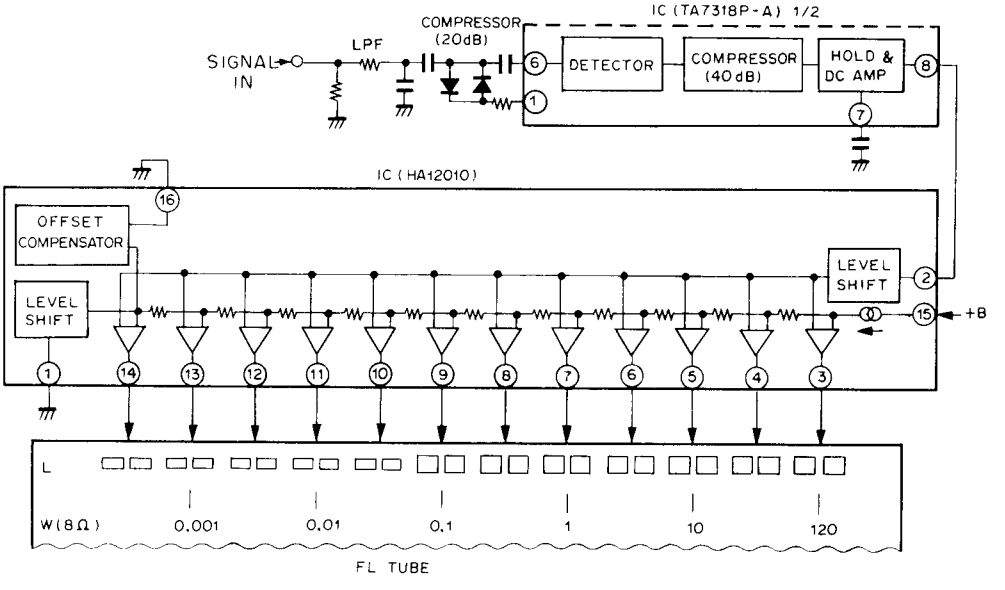

Fig. 4-7 Power Indicator Circuit

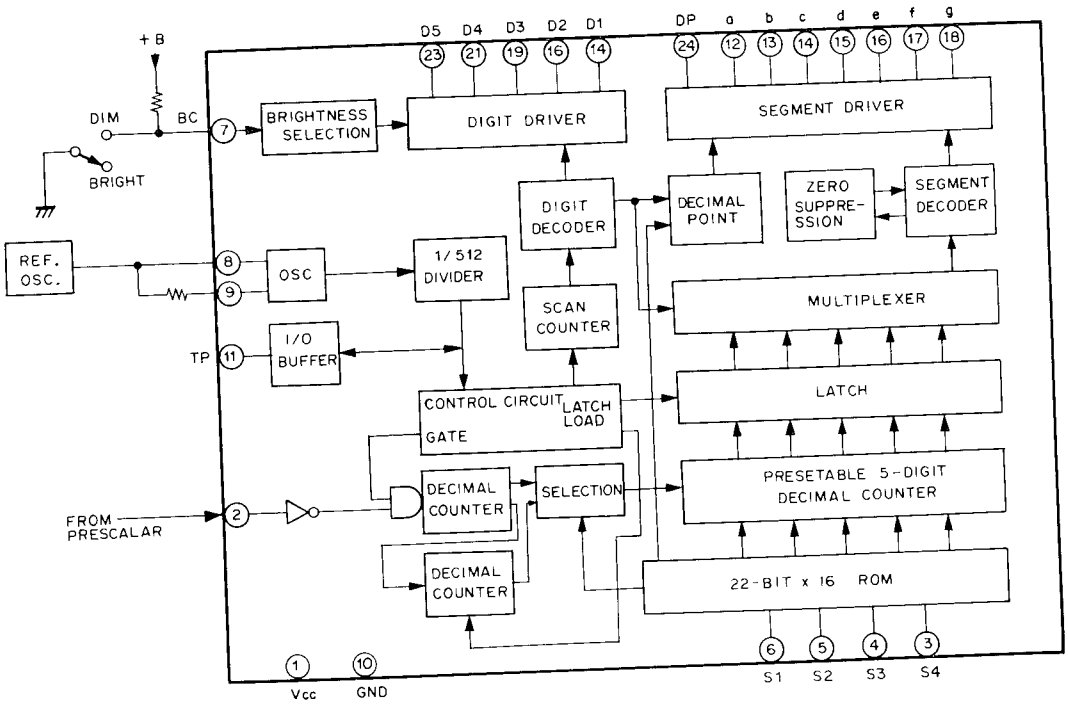

Fig. 4-10 Block Diagram of Counter IC (PD5009)

An outline of the composition of PD5009 is given in block diagram form in Fig. 4-10. With the FL tube a ~ g segments (anode) for each digit connected in parallel, the D1 ~ D5 time division pulse signals (see Fig. 4-11) applied to each grid (independent grid for each digit) result in the digits being lit up in succession from the left hand side. Each digit is lit up for 1ms during each 5ms interval. Pin no.7 of PD5009 is the brightness selector terminal. The time division pulse width is set to 800μs for H level input signals, and to 200μs for L level signals, thereby varying the degree of FL tube brightness (by varying the segment lighting period). Note that since the power indicator FL tube is driven by static drive, the degree of brightness may be varied by changing the grid voltage.

The 5.12MHz crystal oscillator generates the basic signal used in the preparation of the time division pulse signal and the counter gate circuit control signal.

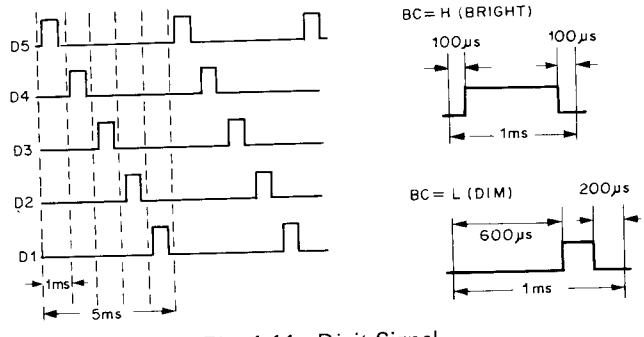

Fig. 4-11 Digit Signal

Table 1

MODE	S1	S2	S3	S4	Intermediate frequency
FM	H	L	H	H	10.67MHz
	H	L	H	L	10.70MHz
	H	L	L	H	10.73MHz
AM	L	H	H	L	450kHz

Terminals S1 ~ S4 (pin nos.3 ~ 6) are used in designating reception mode. The 2 reception modes employed in the SX-3900 (see Table 1) are designated by varying the combination of input levels (H and L). The 3 different IFs during FM mode are required in coping with IF offset in the IF ceramic filter stage, S3 and S4 being preset during FM mode according to the ceramic filter characteristics.

Although the SX-3900 FM stage quartz-lock system is capable of locking any frequency within the FM band, the 10kHz digit (digit in the second decimal place) in the FM frequency display will appear only as 5 or 0.

The frequency display FL tube also incorporates the TUNING and SIGNAL indicators. And although the segments (anode) for these indicators are static driven by the corresponding drive circuits, the grid is driven according to the D3 time division pulse timing, thereby placing the segments under dynamic drive. In addition, the AM and FM indicators in the frequency display section are lit according to the D5 timing, while the kHz and MHz indicators are lit according to the D1 timing.

TUNING Indicator Circuit

The TUNING indicator consists of a center tuning indicator (which lights up when a broadcasting station frequency is properly tuned) and 2 detuning direction indicators which indicate the direction in which the station has been tuned away from. The corresponding drive circuits are outlined in Fig. 4-12.

The TUNING indicator is activated once the station has been tuned to within ±100kHz of the center frequency. This is because Q16 is turned on and Q21 turned off (resulting in the detector differential amplifier [Q19 & Q20] being turned off and Q24 being turned on) by the FM muting signal appearing at pin no.13 of the IF system IC (PA3007-A) and passed via the Schmitt circuit (Q17 & Q18) when the station is tuned away by more than ±100kHz.

The DC voltage on pin no.4 of PA3007-A describes an S curve when tuning to and away from a particular broadcasting frequency, the voltage on pin no.2 serving as the reference level. This DC voltage is amplified by the differential amplifier (Q19 & Q20) and then applied to a polarity detector switch circuit (Q22 & Q23).

When tuning to a frequency from the high frequency side (or tuning away from the frequency to a higher frequency), the voltage on pin no.4 will be higher than that on pin no.2. The Q20 collector voltage will thus be lowered and the Q19 collector voltage raised, resulting in Q23 being turned on, and the higher frequency (right hand side) detuning direction indicator also being turned on. When, on the other hand, the broadcasting frequency is approached from the low frequency side (or when tuning away to a lower frequency) the pin no.4 voltage will be lower, resulting in Q22 being turned on to light up the lower frequency (left hand side) detuning direction indicator. When either Q22 or Q23 is on, the Q24 base voltage will be high, resulting in Q24 being turned on and Q25 turned off, which means that the center tuning indicator will not be lit up.

Once the broadcasting frequency has been tuned properly, the voltages on pin nos. 2 & 4 will be equal. Consequently, Q22 and Q23 will both be turned off, which means that neither of the detuning direction indicators will be on in this case. And since Q24 is turned off because of the decreased base voltage, Q25 will be turned on, and the center tuning indicator light up. Furthermore, C77 is charged up via R99, resulting in Q26 being turned on, thereby lighting up the Quartz Locked indicator LED.

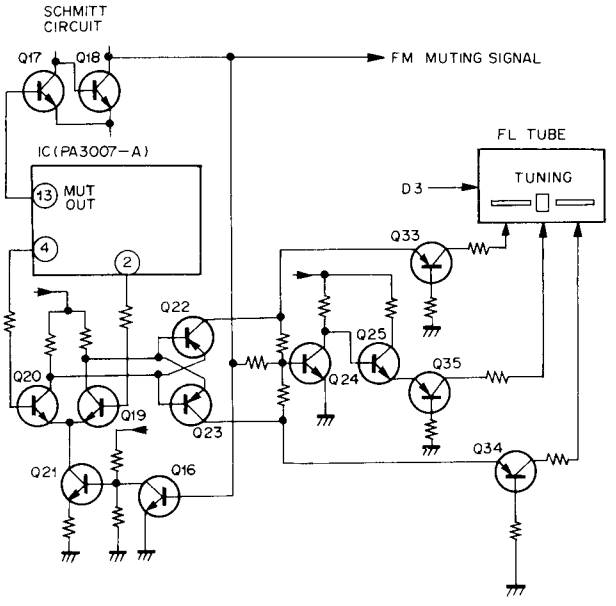

Fig. 4-12 Tuning Indicator Circuit

SIGNAL Indicator Circuit

The SX-3900 SIGNAL indicator consists of an FL tube 5-point indicator display. The signal meter drive signal obtained from the FM IF system IC (PA3007-A) and AM tuner IC (HA1197) is first amplified and then applied to the indicator drive IC (HA12010). This IC contains 12 pairs of voltage comparators similar to those employed in the power indicator circuit, 5 of these pairs being used to drive the SIGNAL indicator (Fig. 4-13).

4.5 PROTECTION CIRCUIT

The purpose of this circuit is to protect both the speakers and the power amplifiers. The relay in the output circuit is automatically opened in any of the following cases:

1. During the "transient operations" when the power supply is turned on and off.
2. Upon detection of a DC voltage in the output circuit, caused by component failure or accident.
3. Upon detection of an overload, caused by a short circuit in the load.

Muting Operation when Power Supply is Turned On and Off

With reference to Fig. 4-14 when the power supply is turned on, Q5 turns off due to −B (The time constant of the −B circuit is very small.). If there is no input (DC) on Q3 and Q4, they will be off, and the timing capacitor C4 charges up through R8 and R7, and thus Q6 turns on. When Q6 conducts, the relay operates, and the output muting on the power amplifier will be removed.

When the power supply is turned off, −B will

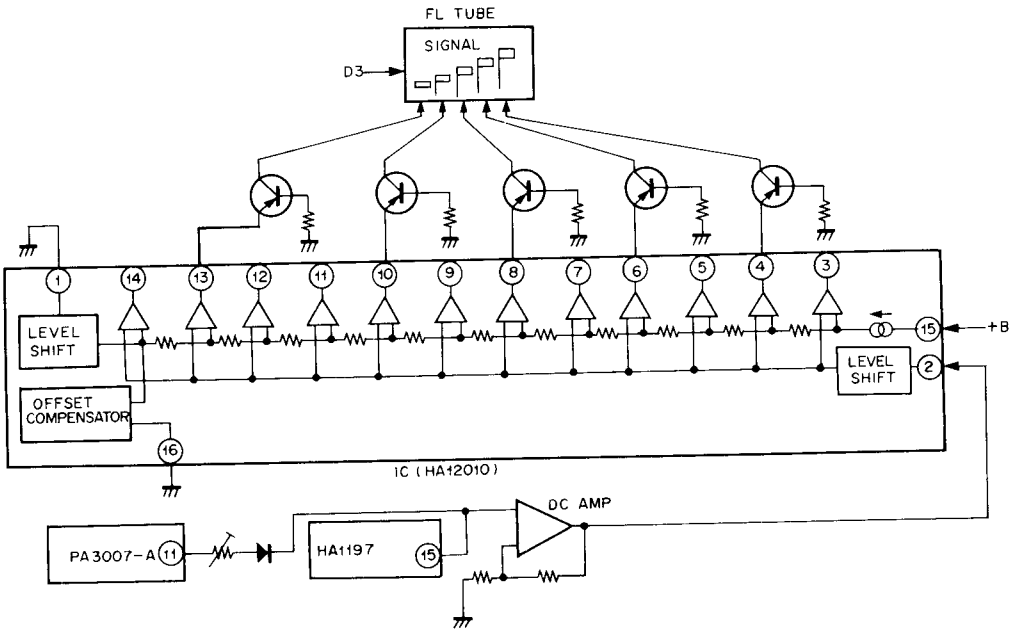

Fig. 4-13 Signal Indicator Circuit

abruptly decay, and Q5 will conduct owing to the residual component of +B. As a result, C4 will rapidly discharge, Q6 will cease to conduct, whereupon the relay will become de-energized and restore muting.

DC Voltage Detector

The output circuit is connected to the Q3 emitter and Q4 base via a low-pass filter (R5, C2). Any DC voltages appearing the output circuit of the power amplifier, it will be applied to the Q3 emitter and Q4 base. If the voltage is positive, Q4 turns on. C4 will rapidly discharge. If the voltage is negative, Q3 turns on. C4 will rapidly discharge. As consequence, Q6 will turn off and the relay will become de-energized, thus causing the output circuit to open.

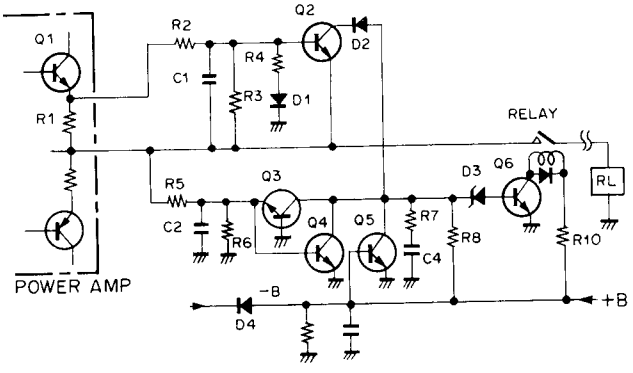

Fig. 4-14 Protection Circuit

Overload Detection

The overload detector circuit incorporates the load (RL) in one side of a Wheatstone bridge (see Fig. 4-15). The base and emitter of a sensing transistor (Q2) are connected to the opposite corners of the bridge, so if RL decreases, Q2 will become forward biased. If RL falls below a prescribed value, Q2 will turn on. C4 will rapidly discharge. As consequence, Q6 will turn off and the relay will become de-energized, thus causing the output circuit to open.

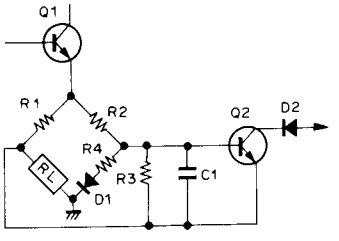

Fig. 4-15 Overload Detector

5. DISASSEMBLY

Wooden Cover

Remove the two screws ❶ on each side of the wooden cover.

Bottom Plate

Remove the thirteen screws ❷ to detach the bottom plate.

Front Panel

Remove all the knobs by pulling. Remove the two screws ❸ from the top edge of the front panel. Remove the two nuts ❹ from the control shafts.

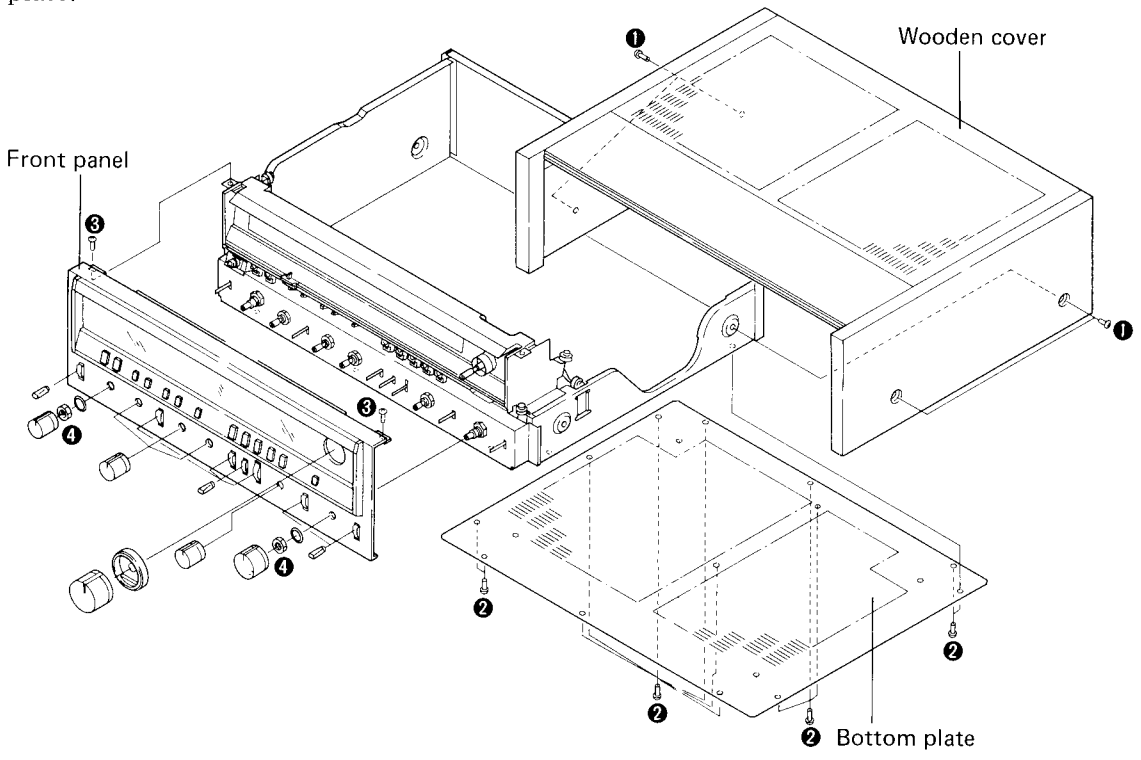

4.6 SURGE CURRENT SUPPRESSOR

Since the SX-3900 employs a large toroidal power transformer and two 15,000μF capacitors in the power supply circuit, the sudden surge of current when the power supply is turned on may reach several hundred amperes. The surge current suppressor circuit used to reduce this sudden surge is shown in Fig. 4-16.

When the POWER switch (S1) is OFF (i.e. no supply of AC power), the relay contact (S2) is open. But when this switch (S1) is turned ON, the sudden surge of current is passed through R1, thereby greatly reducing the flow of current. When the output DC voltage of the power supply circuit reaches a certain prescribed level, S2 will close, and R1 consequently be by-passed. The time required for this to occur, however, is considerably shorter than the time required for the muting circuit to operate when the power supply is turned on, so there is no undue effect upon normal operation of the receiver.

Microtemp is a temperature-sensitive fuse coupled to R1. If S2 fails to close due to an abnormality in the power supply circuit or relay, the heat generated in R1 will cause Microtemp to below, thereby opening the primary circuit.

When the POWER switch (S1) is turned OFF, the relay driving circuit is opened, thereby opening S2 and the primary circuit.

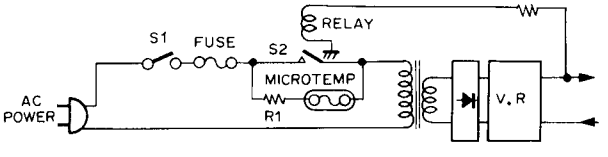

Fig. 4-16 Surge Current Suppressor Circuit

6. PARTS LOCATION

The ⚠ mark found on some component parts indicates the importance of the safety factor of the part. Therefore, when replacing, be sure to use parts of identical designation.

Front Panel View

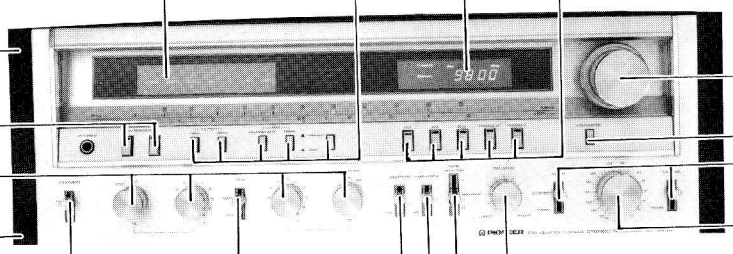

Front View with Panel Removed

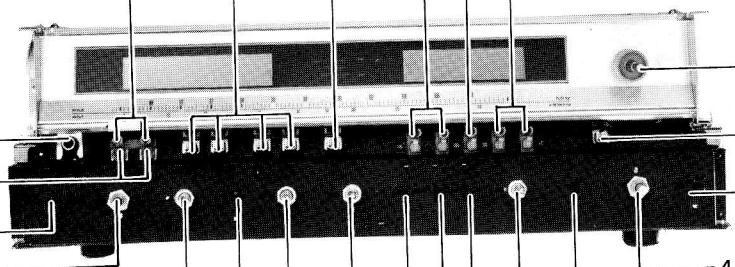

Rear Panel View

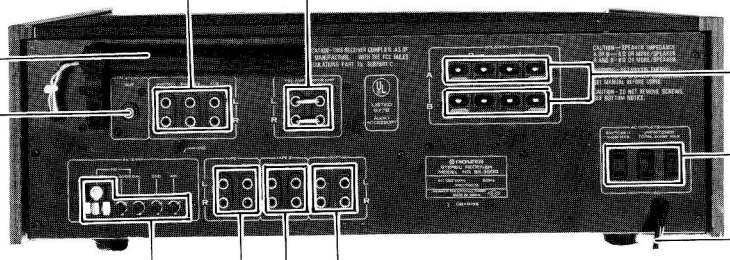

Top Viw

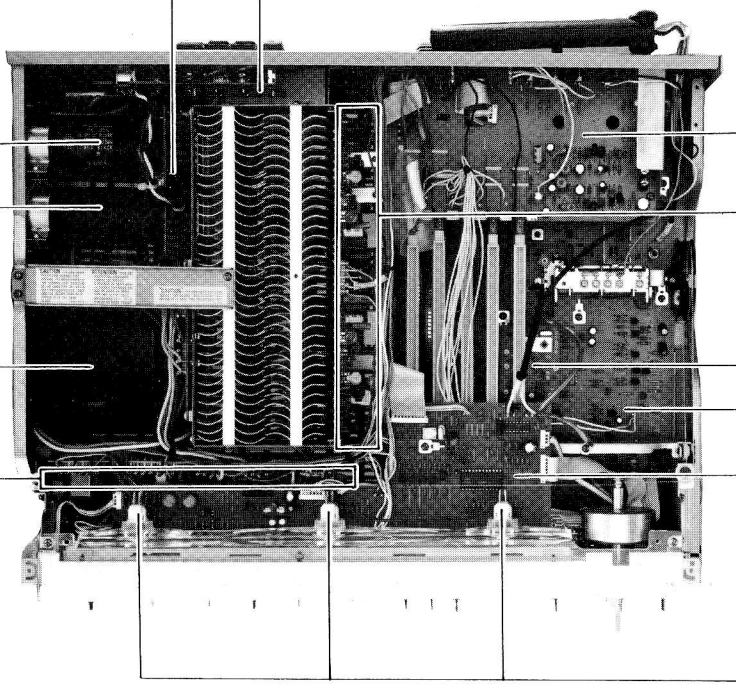

Bottom View

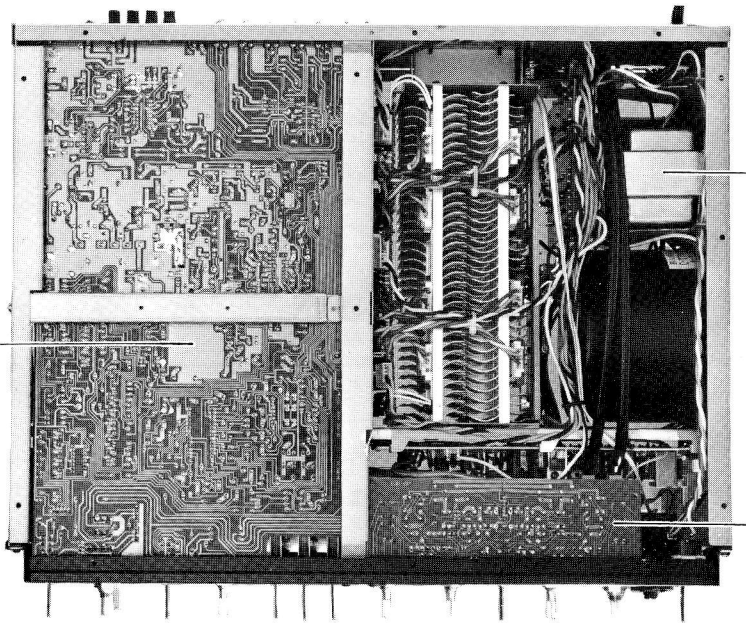

7. DIAL CORD STRINGING

1. Remove the wooden cover and the front panel.
2. Turn the tuning capacitor shaft fully clockwise.
3. Fix the tuning drum to the tuning capacitor shaft so that the set-screw is uppermost.
4. Tie one end of the dial cord to the spring.
5. Pass the cord through the cutout section in the tuning drum. Wind it 1/2 turn around the tuning drum, and then take it over pulleys A, B, C, D and E in that sequence.
6. Wind the cord around the tuning shaft 3 times. Pass it over pully F, wind it around the tuning drum 2 times, and finally tie it to the spring so that it is tensioned.
7. Turn the tuning shaft and check that the cord moves smoothly. Cut off any excess cord.
8. Turn the tuning shaft counter-clockwise as far as it will go.
9. Align the dial pointer with the starting point of the dial scale (third division from the left), and then pass the cord over it.
10. Check that the dial pointer is in line with the starting point of the dial scale.
11. Finally apply the locking paint to the knot of the cord and the dial pointer connection.
12. If the tension of the cord is weak, move the spring to the projection B.

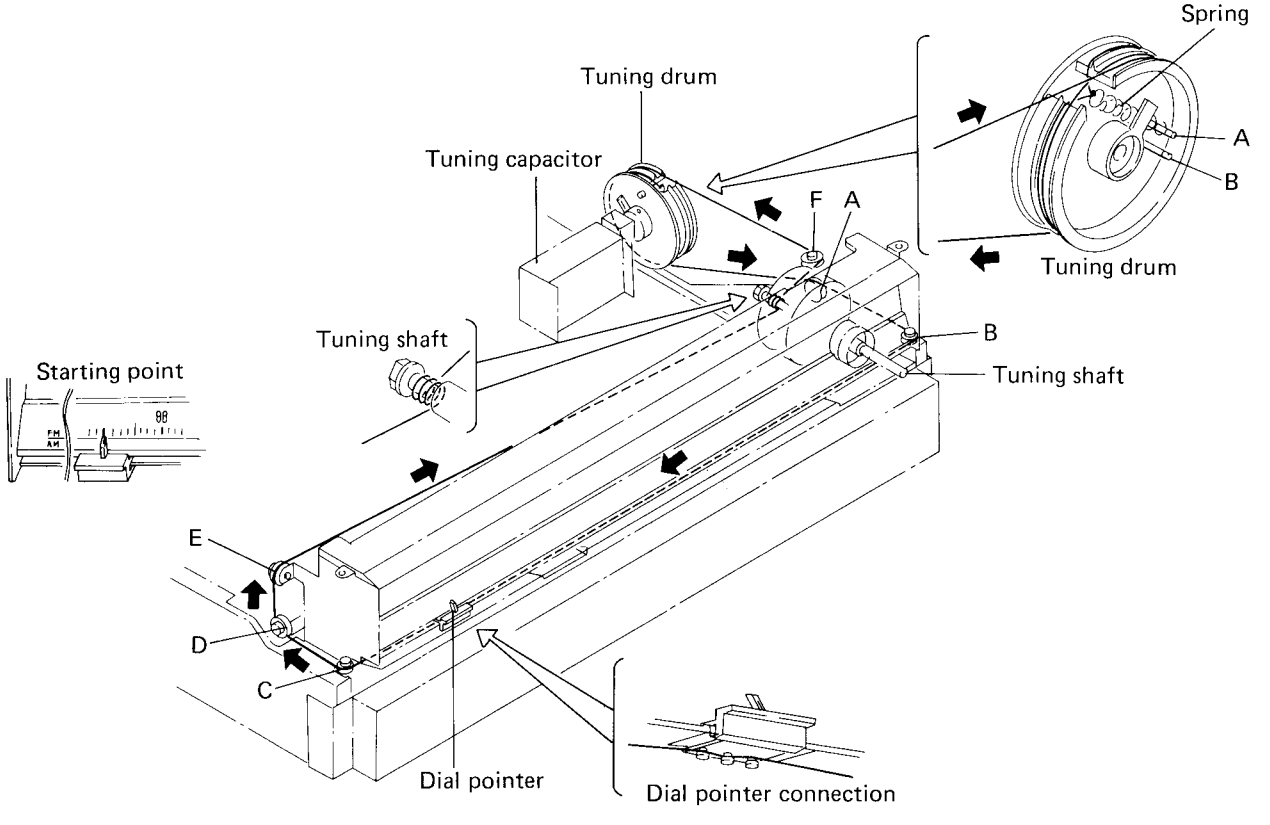

8. ADJUSTMENTS

8.1 AUDIO SECTION

Power Amplifier

Turn VR3, VR5(L) and VR4, VR6(R) fully around in the counter-clockwise direction, but set VR1(L) and VR2(R) to the center positions. Without any load or input signal, turn the POWER switch ON.

- **DC Balance**

1. Adjust VR1(L) for 0V (to within ±30mV) between terminal No.30 and ground.
2. Adjust VR2(R) for 0V (to within ±30mV) between terminal No.29 and ground.

- **Idle Current**

1. Adjust VR3(L) for 56mV between terminals No.12(+) and No.11(−).
2. Adjust VR4(R) for 56mV between terminals No.9(+) and No.10(−).
3. Adjust VR5(L) for 70mV between terminals No.12(+) and No.11(−).
4. Adjust VR6(R) for 70mV between terminals No.9(+) and No.10(−).

Output Power Indicator Calibration

1. Apply a 1kHz signal to the POWER AMP IN terminals (or any other input power amplifier input terminals).
2. Adjust the level of this input signal so that the voltage on the output terminals (SPEAKERS) read 8.95V(rms).
3. Adjust VR1(L) and VR2(R) so that the output power indicator read 10 watts.

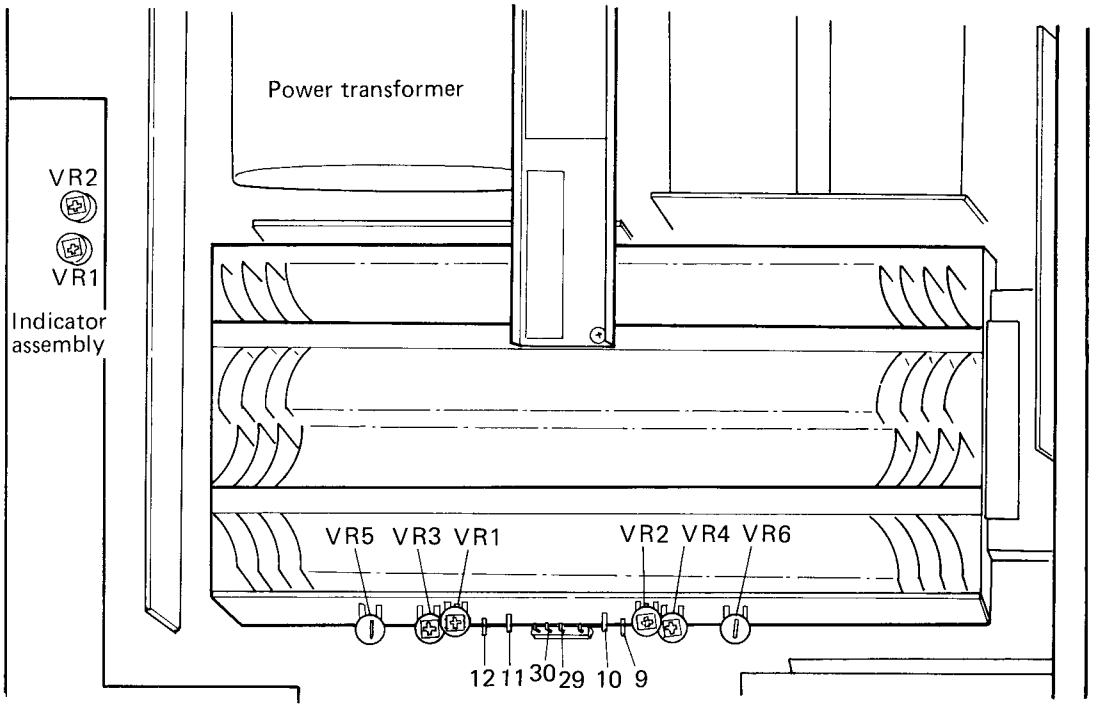

Fig. 8-1 Power amplifier adjustments

8.2 TUNER SECTION

FM Tuner

- Connect the FM SG (FM signal generator) to the FM ANTENNA 300Ω terminals via a 300Ω dummy antenna.
- Switch the FUNCTION selector to the FM position, the FM MUTING OFF switch to the OFF position.
- L5 and L6 are coreless coils which may be adjusted by extending one turn of coil out towards tuning capacitor (see Fig. 8-2).

1. Set the SX-3900 dial pointer to a frequency in the 106MHz region so that there will be no input signal.
2. Rotate the N core of T2 so that the voltage between no.8 and no.7 terminals on the tuner assembly is reduced to DC 0V.
3. Next tune the dial pointer to 106MHz, and set the FM SG output to 106MHz, 60 to 80dB (modulation — 400Hz, ±75kHz deviation).
4. Adjust TC1 so that the voltage between no.8 and no.7 terminals is reduced to DC 0V and maximum reading of the SIGNAL indicator.
5. Then tune the dial pointer to 90MHz, and set the FM SG output frequency to 90MHz.
6. Rotate the L8 core so that the voltage between no.8 and no.7 terminals is reduced to DC 0V and maximum reading of the SIGNAL indicator.
7. Repeat steps 3 to 6 above.
8. Reset the FM SG output level to 20 — 30dB, and adjust TC2, TC3, TC4 and T1 at 106MHz, and L2, L5 and L6 at 90MHz in the same manner as described in steps 3 to 7. These adjustments will ensure optimum sensitivity between the two extreme frequencies.
9. Retune to a position with no input signal.
10. Rotate the A core of T2 so that the voltage between no.8 and no.7 terminals is reduced to DC 0V.
11. Set the FM SG output to 98MHz and 60dB (modulation — 400Hz, ±75kHz deviation), and tune the SX-3900 to this position (fine adjust the tuning knob to ensure a DC 0V reading between no.8 and no.7 terminals).
12. Then rotate the B core of T2 to reduce distortion in the demodulator output (TAPE REC terminal) to minimum.
13. Repeat steps 9 to 12 above until both specifications are satisfactorily met.
14. Set the FM SG output to 98MHz and 60dB, and tune the SX-3900 to this position.
15. Adjust VR2 so that the SIGNAL indicator (5-point display) reads "5".
16. Turn the FM MUTING OFF switch to the ON position, and set the FM SG output level to 20dB.
17. Adjust VR1 to bring the input level to the starting point of the muting operation.

Multiplex Decoder

- Connect the MPX SG (FM multiplex generator) to the FM SG external modulator terminal.
- Set the FM MUTING OFF switch to the OFF position.

18. Set the FM SG output to 98MHz and 60dB (unmodulated), and tune the SX-3900 to this position (fine adjust the tuning knob to ensure a DC 0V reading between no.8 and no.7 terminals).
19. Adjust VR5 to obtain a 76kHz signal at terminal no.6.
20. Set the FM SG output level to 60dB, and the modulation mode to external. Then with the MPX SG, set Main off, and pilot signal to ±7.5kHz deviation.
21. Adjust VR4 to reduce leakage of the 19kHz pilot signal (in both channels) to a minimum (at TAPE REC terminals).
22. Set the FM SG output level to 80dB, the MPX SG Main to 1kHz, L+R to ±67.5kHz deviation, and pilot signal to ±7.5kHz deviation.
23. Rotate the T1 core around by up to 90° in either direction to reduce the demodulator output (TAPE REC terminals) distortion to a minimum.
24. Then set the FM SG output level to 60dB, the MPX SG Main to 1kHz, L (or R) to ±33.75kHz deviation, and pilot signal to ±7.5kHz deviation.
25. Adjust VR4 to reduce crosstalk between L and R channels to a minimum.

Crystal Detector

- Set the FM MUTING OFF switch to the OFF position.

26. Set the FM SG output to 98MHz and 60dB (unmodulated), and tune the SX-3900 to this position (fine adjust the tuning knob to ensure a DC 0V reading between no.8 and no.7 terminals of the tuner assembly).
27. Rotate the B core of T201 to obtain a reading of DC 0V (within ±30mV) between terminal no.9 and ground.
28. Set the FM SG modulation to 400Hz, ±75kHz deviation.
29. Rotate the A core of T201 to minimize AC signal level between no.9 and ground.

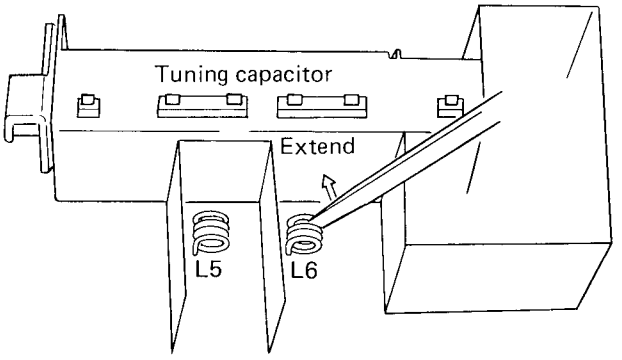

Fig. 8-2 Adjustment of the tuning coils

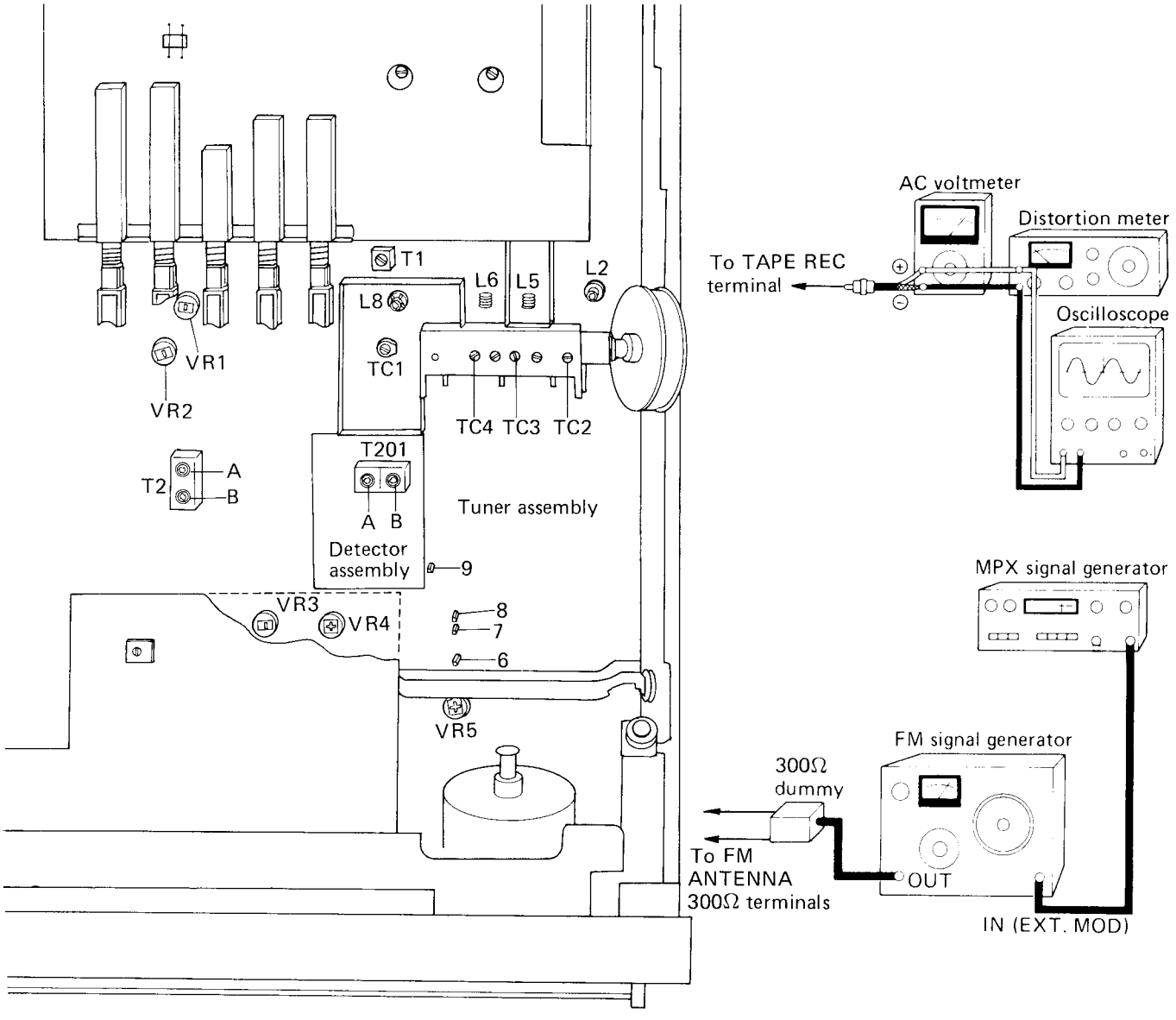

Fig. 8-3 FM tuner adjustment

Frequency Display Circuit

- The counter IC (PD5009) has been designed to match FM ceramic filter IF offset (caused by displacement of the central frequency) by combination of the inputs (of H or L level) applied to pin nos.3 & 4. The matching IF offset in the SX-3900 is determined according to the combinations of connections and disconnections between the JP14 and JP15 jumper wires in the equalizer assembly (AWM-226). Check that the combinations shown in the table below have been followed for the corresponding grades of FM ceramic filters F1~F3 (5 ranks — color coded).
- If the SX-3900 frequency display reads 97.95MHz or 98.05MHz when a 98.00MHz signal is applied to the receiver, adjust TC1 so that the display reads 98.00MHz correctly.
- If an accurate 98.00MHz input signal source is not available, tune the receiver to the nearest known broadcasting station in the 98MHz region, and check that the station's frequency is correctly displayed, adjusting TC1 if necessary.

FM ceramic filters (F1–F3)	PD5009		AWM-226	
	Pin no.3	Pin no.4	JP14	JP15
Red	L	H	Cut	Connect
Blue	H	H	Cut	Cut
Gray	H	L	Connect	Cut
Orange	H	L	Connect	Cut
Brown	H	H	Cut	Cut

H≅5.5V L≅0V

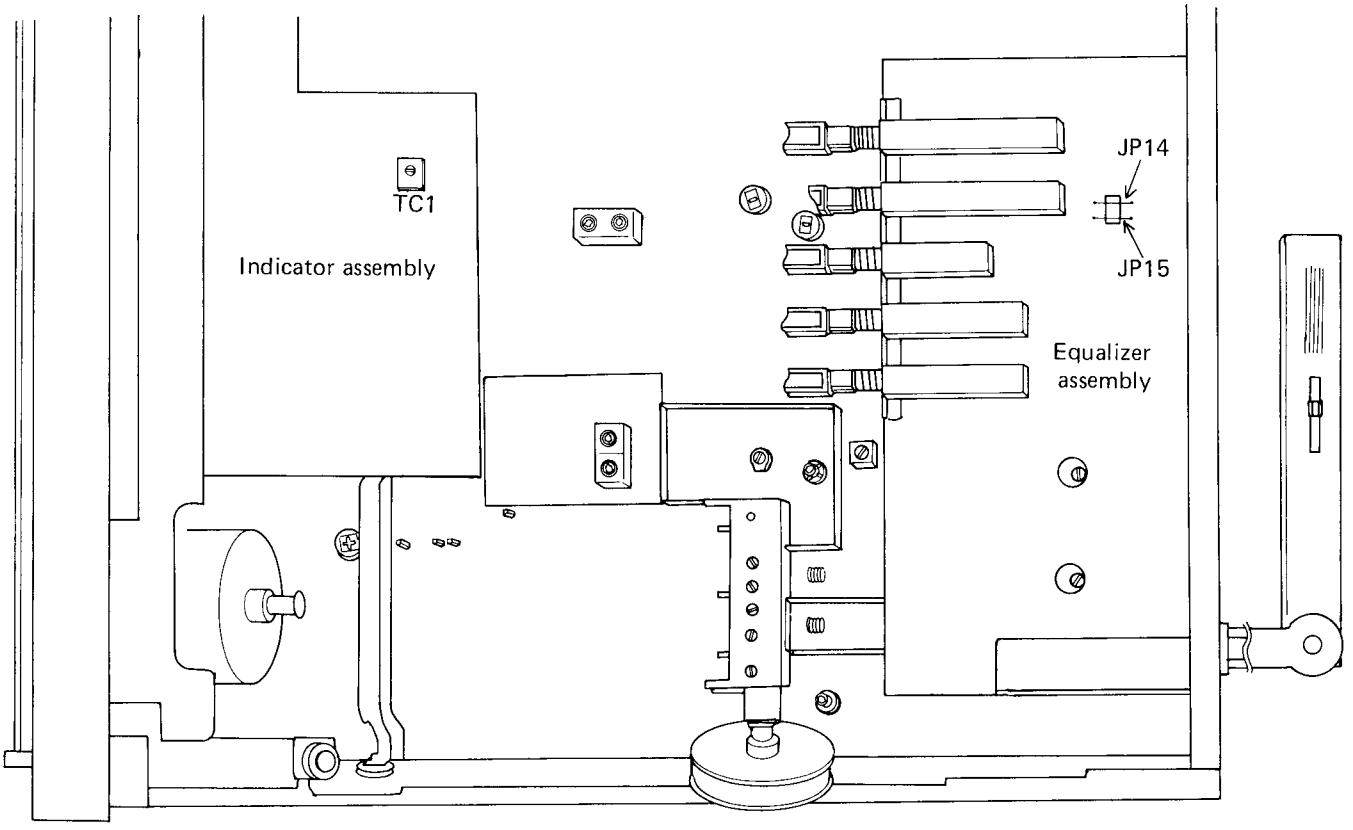

Fig. 8-4 Adjustment of frequency display

AM Tuner

- Connect the AM SG (AM signal generator) to the AM ANTENNA terminal via 1kΩ resistor.
- Switch the FUNCTION selector to the AM position.

1. Set the SX-3900 dial pointer to 600kHz, and the AM SG output to 600kHz, 100dB (modulation 400Hz, 30%).
2. Adjust the core of T3 to maximum demodulated output (at TAPE REC terminal).
3. Then set to 1400kHz, and set the AM SG output frequency to 1400kHz also.
4. This time adjust TC6 to obtain maximum demodulated output (at TAPE REC terminal).
5. Set the SX-3900 dial pointer to 600kHz, and the AM SG output to 600kHz, 30dB.
6. Adjust the core of T3 to maximum demodulated output (at TAPE REC terminal).
7. Then set to 1400kHz, and set the AM SG output frequency to 1400kHz.
8. Adjust TC6 to obtain maximum demodulated output (at TAPE REC terminal).
9. Repeat steps 5 to 8 above.
10. Set the SX-3900 dial pointer to 600kHz, and the AM SG output frequency to 600kHz.
11. Slide the bar-antenna coil along the core to find the position which gives maximum demodulated output (at TAPE REC terminal).
12. Tune to 1400kHz, and set the AM SG output frequency to 1400kHz.
13. Adjust TC5 to obtain maximum demodulated output (at TAPE REC terminal).
14. Repeat steps 10 to 13 as above.
15. Tune to 600kHz, and set the AM SG output frequency to 600kHz.
16. Adjust T4 and F7 to obtain maximum demodulated output (at TAPE REC terminal).

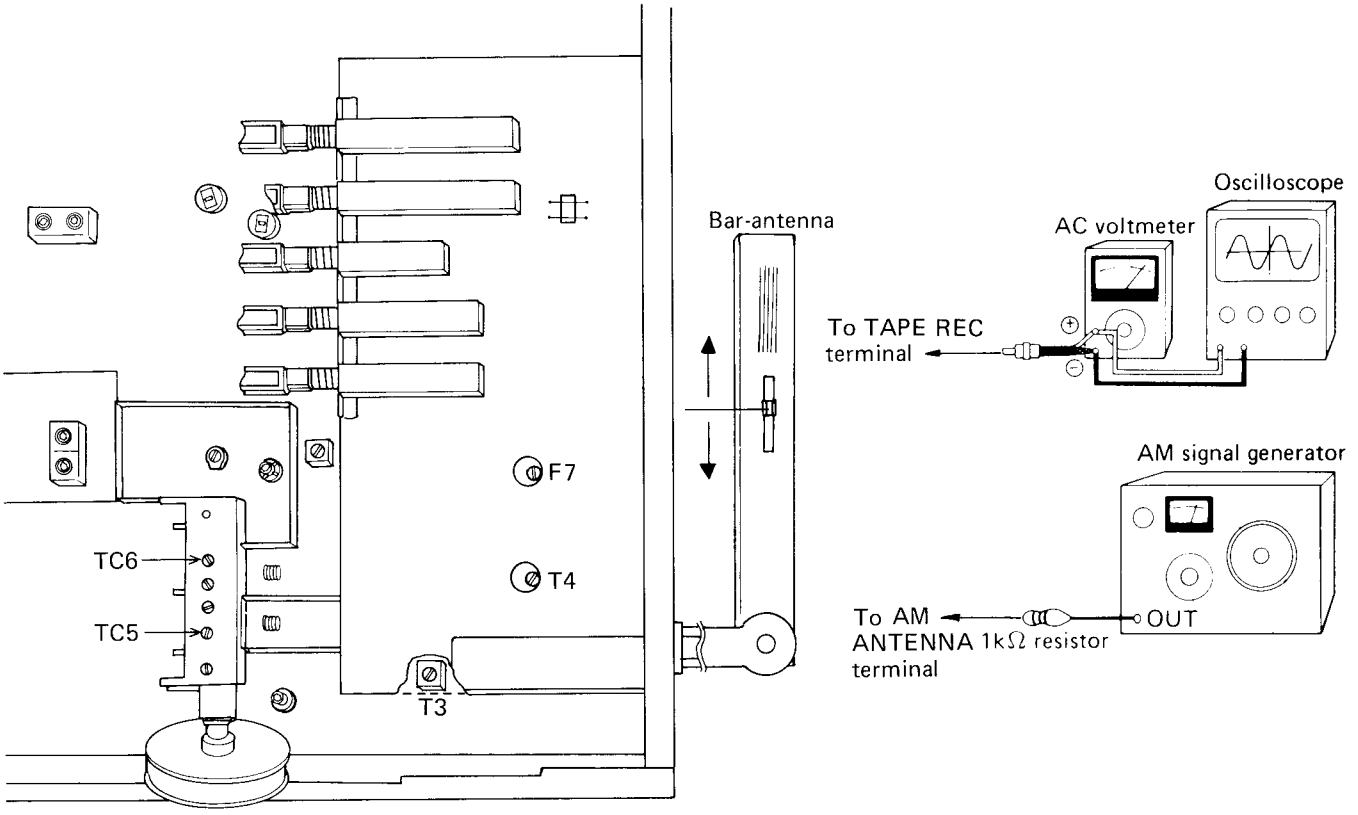

Fig. 8-5 AM tuner adjustment

9. SCHEMATIC DIAGRAM

External Appearance of Transistors and ICs

2SA726S

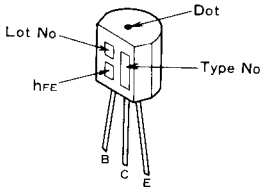

2SA733A 2SC945A 2SC1775A

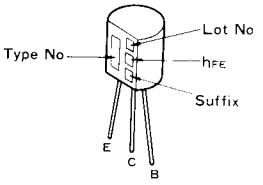

2SA979

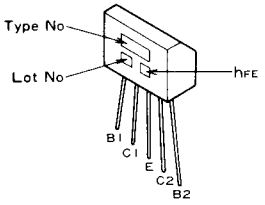

2SA985A

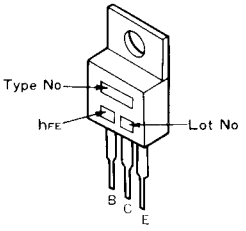

2SA978 2SA1100 2SC1919 2SC2575

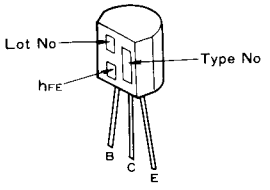

2SA750 2SC1400

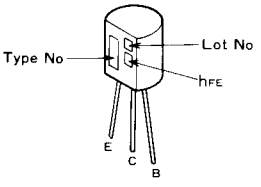

2SA904A 2SC1914A

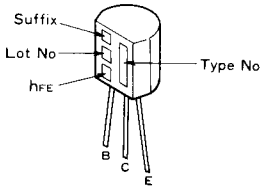

2SA905 2SC915

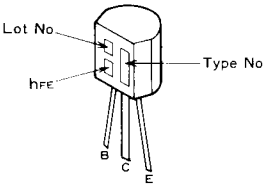

2SA912 2SC1885

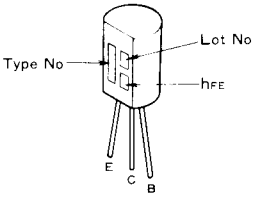

2SB682

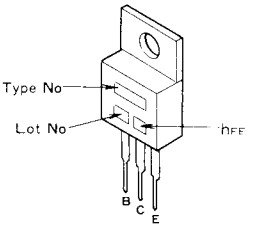

2SA1076 2SC2526

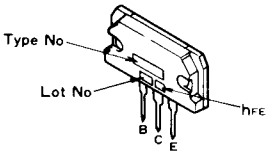

2SC461 2SC535

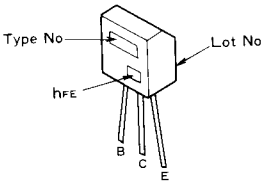

2SC1906

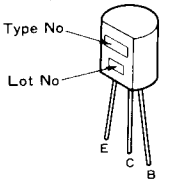

2SD313

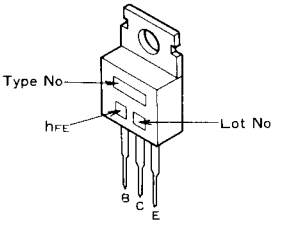

2SK34

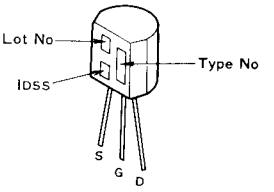

3SK73

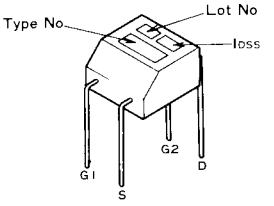

2SK168

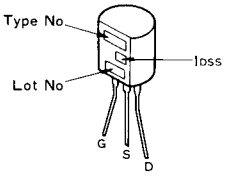

2SC1384

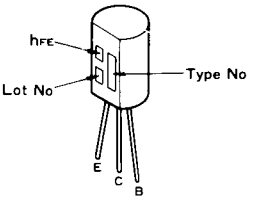

2SD313P

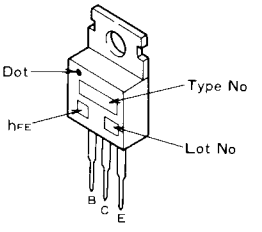

TA7318P

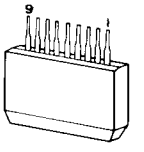

M54451P

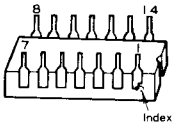

PA3007-A

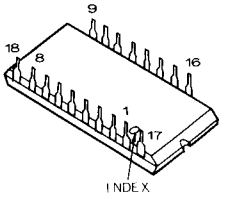

HA1197 HA12010

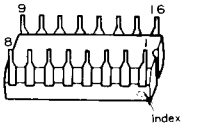

HA1201 NJM4558DV

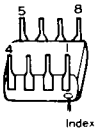

PA4006-A

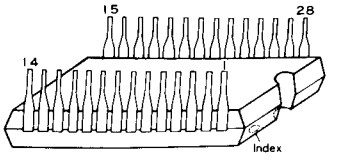

HA12017P

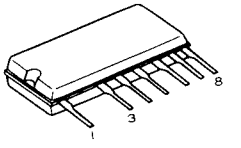

PD5009

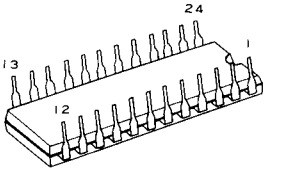

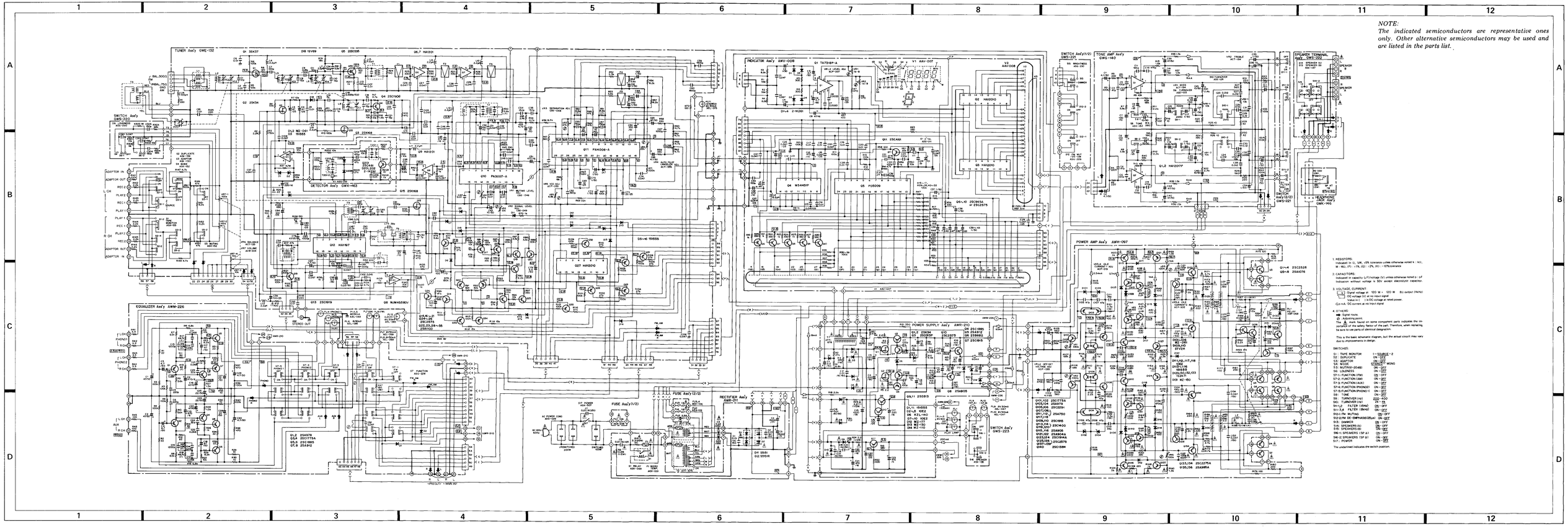

NOTE:
The indicated semiconductors are representative ones only. Other alternative semiconductors may be used and are listed in the parts list.

1. RESISTORS:
Indicated in Ω, 1/4W, ±5% tolerance unless otherwise noted k : kΩ, M : MΩ. (F) : ±1%, (G) ±2%, (K) : ±10% tolerance

2. CAPACITORS:
Indicated in capacity (μF)/voltage (V) unless otherwise noted p : pF
Indicators without voltage is 50V except electrolyte capacitor.

3. VOLTAGE, CURRENT
Power Amp Ass'y : 120 W + 120 W 8Ω output (1kHz)
DC voltage (V) at no input signal
Value in ( ) is DC voltage at rated power.
Unit DC current at no input signal

4. OTHERS
Solder points
Connecting points
The ⚠ mark found on some component parts indicates the importance of the safety factor of the part. Therefore, when replacing, be sure to use parts of identical designation.

This is the basic schematic diagram, but the actual circuit may vary due to improvements in design.

SWITCHES

S1 : TAPE MONITOR	1—SOURCE · 2
S2 : DUPLICATE	ON · OFF
S3 : ADAPTOR	ON · OFF
S4 : MODE	STEREO · MONO
S5 : MUTING (20dB)	ON · OFF
S6 : DIMMER	ON · OFF
S7-1 : FUNCTION (FM)	ON · OFF
S7-2 : FUNCTION (AM)	ON · OFF
S7-3 : FUNCTION (AUX)	ON · OFF
S7-4 : FUNCTION (PHONO2)	ON · OFF
S7-5 : FUNCTION (PHONO 1)	ON · OFF
S8 : TONE	ON · OFF
S9 : TURNOVER (Hz)	500 · 400
S10 : TURNOVER (kHz)	5 · 15
S11-1,2 FILTER (10kHz)	ON · OFF
S11-3,4 FILTER (8kHz)	ON · OFF
S12-1 FM MUTING	ON · OFF
S12-2 FM DE-EMPHASIS(50μs)	ON · OFF
S13 : DIMMER	ON · OFF
S14 : SPEAKERS (A)	ON · OFF
S15 : SPEAKERS (B)	ON · OFF
S16-1 : SPEAKERS (SP A1)	ON · OFF
S16-2 : SPEAKERS (SP B1)	ON · OFF
S17 : POWER	ON · OFF

The underlined indicates the switch position.

SX-3900

10. P.C. BOARD CONNECTION DIAGRAM

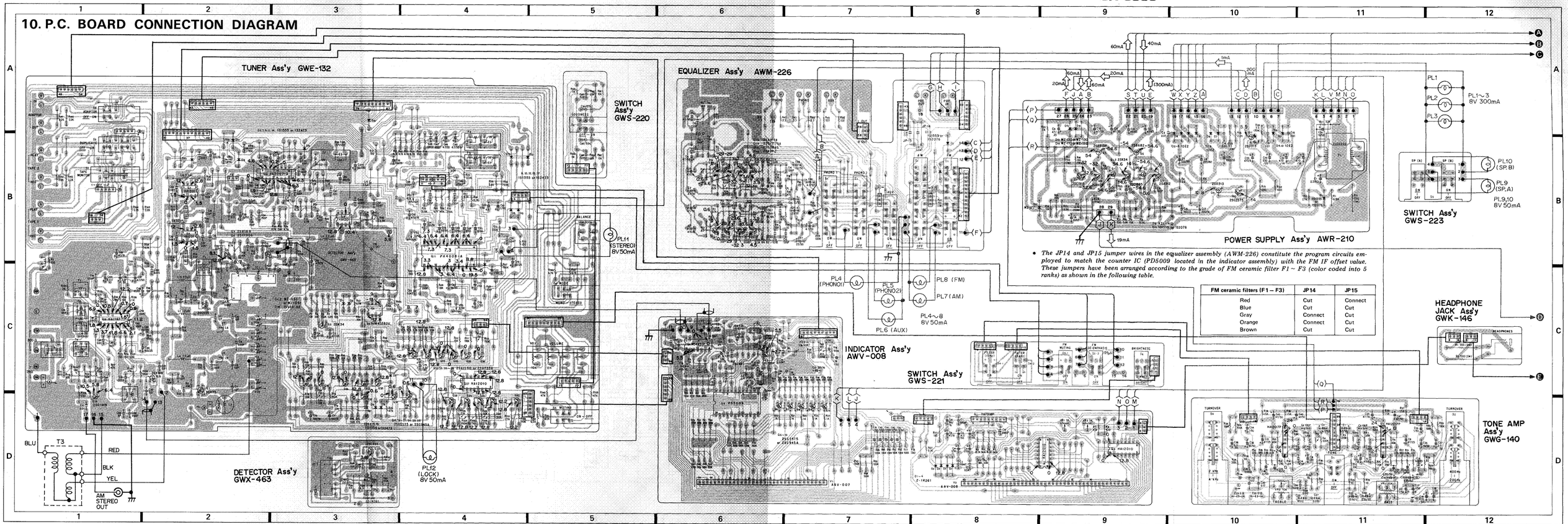

- *The JP14 and JP15 jumper wires in the equalizer assembly (AWM-226) constitute the program circuits employed to match the counter IC (PD5009 located in the indicator assembly) with the FM IF offset value. These jumpers have been arranged according to the grade of FM ceramic filter F1 ~ F3 (color coded into 5 ranks) as shown in the following table.*

FM ceramic filters (F1 – F3)	JP14	JP15
Red	Cut	Connect
Blue	Cut	Cut
Gray	Connect	Cut
Orange	Connect	Cut
Brown	Cut	Cut

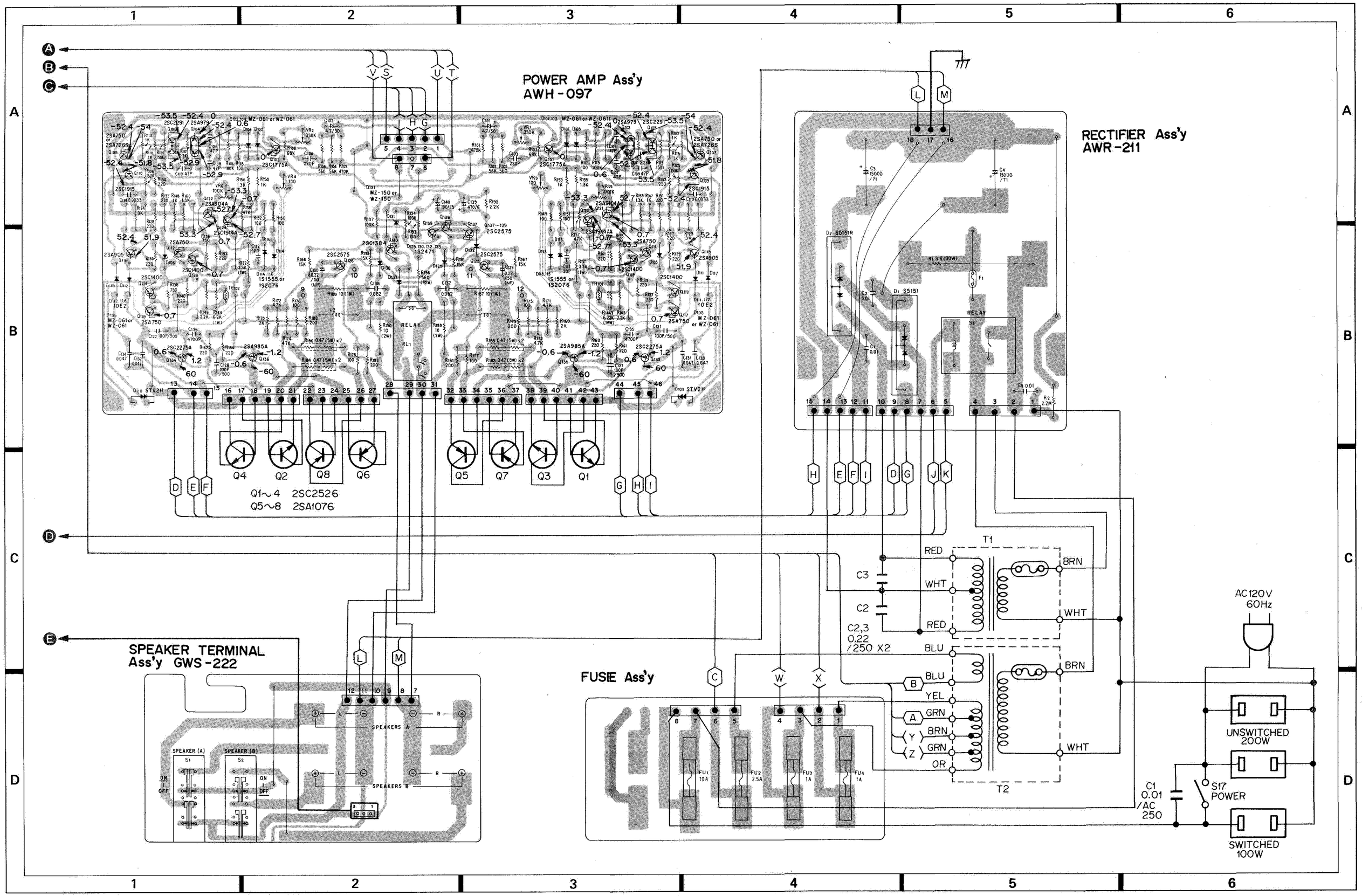
POWER AMP Ass'y
AWH-097
RECTIFIER Ass'y
AWR-211
Q1~4 2SC2526
Q5~8 2SA1076
SPEAKER TERMINAL
Ass'y GWS-222
FUSE Ass'y
T1
T2
RED
WHT
BRN
BLU
YEL
GRN
OR
C3
C2
C2,3
0.22
/250 X2
AC120V
60Hz
UNSWITCHED
200W
SWITCHED
100W
S17
POWER
C1
0.01
/AC
250
RELAY
SPEAKERS A
SPEAKERS B
SPEAKER (A)
SPEAKER (B)
ON
OFF

11. PARTS LIST

NOTES:

- *When ordering resistors, first convert resistance values into code form as shown in the following examples.*

  Ex. 1 When there are 2 effective digits (any digit apart from 0), such as 560 ohm and 47k ohm (tolerance is shown by J = 5%, and K = 10%).

560Ω	*56 x 10^1*	*561*	*RD¼PS 5 6 1 J*
47kΩ	*47 x 10^3*	*473*	*RD¼PS 4 7 3 J*
0.5Ω	*0R5*		*RN2H 0 R 5 K*
1Ω	*010*		*RSIP 0 1 0 K*

  Ex. 2 When there are 3 effective digits (such as in high precision metal film resistors).

5.62kΩ	*562 x 10^1*	*5621*	*RN¼SR 5 6 2 1 F*

- *The ⚠ mark found on some component parts indicates the importance of the safety factor of the part. Therefore, when replacing, be sure to use parts of identical designation.*

Miscellaneous Parts

SEMICONDUCTORS

Part No.	Symbol & Description
2SC2526	Q1–Q4
2SA1076	Q5–Q8

FUSES

Part No.	Symbol & Description	
⚠ AEK-305	FU1	10A
⚠ AEK-102	FU2	2.5A
⚠ AEK-106	FU3, FU4	1A

LAMPS

Part No.	Symbol & Description	
AEL-029	PL1–PL3	Lamp (wedge type)
AEL-069	PL4, PL5, PL7, PL8	Lamp with wires
AEL-095	PL6	Lamp with wires
AEL-047	PL9, PL10	Lamp with wires
AEL-075	PL11	Lamp with wires
AEL-065	PL12	Lamp with wires

SWITCHES

Part No.	Symbol & Description	
⚠ ASK-507	S17	Lever (POWER)
ASX-128	Remote lever (ADAPTOR, DUPLICATE)	
ASX-131	Remote lever (TAPE MONITOR)	

P.C. BOARD ASSEMBLIES

Part No.	Symbol & Description
GWE-132	Tuner assembly
GWS-220	Switch assembly
GWX-463	Detector assembly
AWV-008	Indicator assembly
AWM-226	Equalizer assembly
GWG-140	Tone amplifier assembly
GWS-221	Switch assembly
AWH-097	Power amplifier assembly
AWR-210	Power supply assembly
GWS-222	Speakers terminal assembly
GWS-223	Switch assembly
GWK-146	Headphones jack assembly
AWR-211	Rectifier assembly

OTHERS

Part No.	Symbol & Description	
⚠ ACG-001	C1	Ceramic capacitor 0.01/250V
⚠ ATT-676	T1	Power transformer
⚠ ATT-675	T2	Power transformer
ATB-624	T3	Bar-antenna assembly
⚠ AKP-041	AC socket (AC OUTLETS)	
⚠ ADG-029	AC power cord	
AKB-076	Terminal (AM STEREO OUT)	
AKH-010	Transistor socket	
AKK-005	Lamp socket	
AKM-004	Jumper plug	
CQMA 224K 250	C2, C3	

Parts List of Tuner Assembly (GWE-132)

CAPACITORS

Part No.	Symbol & Description	
ACK-034	VC	Tuning capacitor
ACM-006	TC1	Ceramic trimmer
CCDCH 070D 50	C50	
CCDCH 010C 50	C16	
CCDCH 040C 50	C14	
CCDCH 120J 50	C11	
CCDCH 150J 50	C21	

Part No.	Symbol & Description	
CCDCH 330J 50	C20	
CCDCH 101J 50	C7	
ACG-018	C52	Ceramic 390p/50V
CCDLH 080D 50	C19	
CCDRH 150J 50	C17	
CCDUJ 120J 50	C1, C8, C10	
CCDXL 080D 50	C89	
CCDSL 390J 50	C75	
CCDSL 101J 50	C24, C49	
CCDSL 151J 50	C34, C35	
CKDYB 102K 50	C15, C67, C68, C82, C91	
CKDYB 122K 50	C99	
CKDYF 103Z 50	C2, C5, C6, C13, C22, C23, C25, C32, C38, C41, C42, C44, C45, C81, C86, C87, C90, C92–C95, C101, C107	
CKDYF 473Z 50	C26–C29, C31, C37, C39, C40, C46–C48, C74, C96, C100, C104–C106, C108	
CGB R68K 500	C18	
CGB R91J 500 (CGB R91K 500)	C9	
CQMA 153K 50	C102	
CQMA 473K 50	C53	
CQSH 331J 50	C88	
CQSH 751J 50	C55, C57	
CQSH 152J 50	C59, C60	
CEANL R22M 50	C103	
CEANL 010M 50	C63, C64, C70, C71	
CEANL 4R7M 50	C65, C66	
CEA 010M 50L	C61, C62, C72	
CEA 3R3M 50L	C79, C98	
CEA 4R7M 50L	C97	
CEA 100M 50L	C33, C43, C56, C69, C85	
CEA 220M 25L	C73	
CEA 470M 10L	C80	
CEA 101M 10L	C30, C76, C77	
CEA 101M 25L	C36, C83, C84	
CEA 221M 16L	C12	
CEA 331M 10L	C54	
CEA 471M 16L	C51, C85	
CEA 470M 25L	C3, C4, C78	

Note: When ordering resistors, convert the resistance value into code form, and then rewrite the part no. as before.

RESISTORS

Part No.	Symbol & Description	
C92-048	VR1, VR3	Semi-fixed (47k-B)
C92-049	VR2	Semi-fixed (10k-B)
ACP-056	VR4	Semi-fixed (22k-B)
ACP-055	VR5	Semi-fixed (6. 8k-B)
ACT-133	VR6	Variable (BALANCE)
ACW-304	VR7	Variable (VOLUME)

Part No.	Symbol & Description
RD¼PM □□□ J	R1–R11, R13, R15–R22, R24–R29, R31–R45, R47–R49, R52–R63, R65, R67, R70–R123, R125, R128–R152
⚠ RD¼PMF □□□ J	R12, R46, R126
RN¼PQ □□□□ F	R50, R51
RN¼SQ □□□□ F	R30

SEMICONDUCTORS

Part No.	Symbol & Description
3SK73	Q1
2SK34	Q2
2SK168	Q3, Q15
2SC1906	Q4
2SC535-A	Q5
HA1201	Q6, Q7, Q9
NJM4558DV	Q8
PA3007-A	Q10
PA4006-A	Q11
HA1197	Q12
2SC1919	Q13
2SC2575 (2SC945A)	Q14, Q16–Q21, Q24–Q16
2SA1100 (2SA733A)	Q22, Q23, Q28–Q35
HA12010	Q27
MZ-061 (WZ-061)	D1, D2
1S1555 (1S2473)	D3, D5–D17
1SV69-03	D18

COILS AND FILTERS

Part No.	Symbol & Description	
T24-028	L4, L7, L9–L13, L15, L16	Choke coil
ATC-097	L2	FM antenna coil
ATC-099	L5, L6	FM RF coil
ATC-072	L8	FM osc. coil
ATE-008	T1	FM IFT
ATE-045	T2	FM DET
ATB-063	T3	AM osc. coil
ATB-069	T4	AM IF coil
ATF-104*	F1–F3	FM ceramic filter

- The FM ceramic filters (ATF-104, symbol nos. F1 ~ F3) in the tuner assembly (GWE-132) has been selected on the basis of their respective IF offset values (the degree of displacement from the center IF). Filters are graded into 5 ranks, these being identified by color coding at the top (red, orange, gray, blue, and brown). When replacing filters, always use filters of the same color code.
  When placing orders for these filters, designate the grade (color) as well as the part no.

Part No.	Symbol & Description	
ATF-073	F4, F5	FM low pass filter
ATF-105	F6	AM ceramic filter
ATF-038	F7	AM IF filter

SWITCHES

Part No.	Symbol & Description	
ASX-133	S1	Remote slide (TAPE MONITOR)
ASX-134	S2	Remote slide (DUPLICATE)
ASX-130	S3	Remote slide (ADAPTOR)
ASK-152	S4, S5	Lever (MODE, MUTING)

OTHERS

Part No.	Symbol & Description
AKA-013	Terminal (ANTENNA)
AKB-063	Terminal (TAPE, ADAPTOR)

Parts List of Switch Assembly (GWS-220)

Part No.	Symbol & Description	
ASG-230	S6	Push switch (LOUDNESS)
RD¼PM □□□ J	R301–R306	
CQMA 473K 50	C301, C302	
CCDSL 151J 50	C303, C304	

Parts List of Tone Amplifier Assembly (GWG-140)

CAPACITORS

Part No.	Symbol & Description
CCDSL 101K 50	C5, C6, C11, C12
CCDSL 470K 50	C3, C4
CCDSL 471K 50	C13, C14
CQMA 332J 50	C31, C32
CQMA 123J 50	C23, C24, C27, C28
CQMA 124J 50	C25, C26, C29, C30
CEANL R33M 50	C15, C16, C19, C20
CEANL 010M 50	C17, C18, C21, C22, C33, C34
CEANL 100M 50	C35, C36
CEANL 0R1M 50	C37, C38
CEA 470M 25L	C9, C10
CEA 470M 50L	C39–C42
CEA 101M 10L	C7, C8
CEANL 4R7M 50	C1, C2

Note: When ordering resistors, convert the resistance value into code form, and then rewrite the part no. as before.

RESISTORS

Part No.	Symbol & Description	
ACT-134	VR1, VR2	Variable (BASS, TREBLE)
RD¼PM □□□ J	R3–R40, R43, R44	

SEMICONDUCTORS

Part No.	Symbol & Description
HA12017P	Q1, Q2

SWITCHES

Part No.	Symbol & Description	
ASK-152	S1	Lever (TONE)
ASE-125	S2	Slide rotary (200/400)
ASE-126	S3	Slide rotary (2K/4K)

Parts List of Switch Assembly (GWS-221)

SWITCHES

Part No.	Symbol & Description	
ASG-229	S4	Push (FILTER)
ASG-229	S5	Push (FM MUTING OFF)
ASG-230	S6	Push (BRIGHT/DIM)

Parts List of Power Amplifier Assembly (AWH-097)

CAPACITORS

Part No.	Symbol & Description		
CEANL 4R7M 50	C101, C102		
CCDSL 221K 50	C103, C104		
CCDSL 470K 50	C105–C108		
CCDSL 470J 50	C109, C110		
CCDSL 390K 50	C111, C112		
CQMA 332K 250	C113, C114		
⚠ CCDSL 101K 500	C121, C122, C127, C128		
CEANP R22M 50	C129, C130		
ACG-009	C131–C134	Ceramic	0.047/150V
CKDYB 472K 50	C135, C136		
CQMA 823K 50	C137, C138		
CEA 471M 6L	C139		
CEA 101M 25L	C140		

Note: When ordering resistors, convert the resistance value into code form, and then rewrite the part no. as before.

RESISTORS

Part No.	Symbol & Description	
ACP-035	VR1, VR2	Semi-fixed (330k-B)
ACP-019	VR3, VR4	Semi-fixed (100-B)
ACP-302	VR5, VR6	Semi-fixed (100k-B)
RD¼PM □□□ J	R101–R108, R111, R112, R115, R116, R119, R120, R125, R126, R145, R146, R149–R152, R157, R158, R167–R170, R175–R182, R191–R194, R197, R199	

Part No.	Symbol & Description
RD¼PMF □□□ J	R109, R110, R113, R114, R117, R118, R123, R124, R127–R142, R147, R148, R153–R156, R159–R164, R171–R174
RS1P □□□ J	R121, R122, R143, R144
RD½PS □□□ J	R196
⚠ RN1H □□□ K	R187, R188
⚠ RS2P □□□ K	R189, R190
⚠ ACN-114	R183–R186 Wire wound (twin) 0.47/5W x 2

SEMICONDUCTORS

Part No.	Symbol & Description
2SC1775A-E* or 2SC1775A-F*	Q101, Q102
2SA979-F* or 2SA979-G*	Q103, Q104

*hfe of Q101 and Q102 should have the E-rank, if Q103 and Q104 have the F-rank.
*hfe of Q101 and Q102 should have the F-rank, if Q103 and Q104 have the G-rank.

2SC2291	Q105, Q106
2SA750 (2SA726S)	Q107, Q108
2SC1915	Q109, Q110
2SA750	Q111, Q112, Q117, Q118
2SC1400	Q113, Q114, Q119, Q120
2SA905	Q115, Q116
2SA904A	Q121, Q122
2SC1914A	Q123, Q124
2SC2575	Q125, Q126, Q137–Q139
2SC2275A-Q** or 2SC2275A-P**	Q133, Q134
2SA985A-Q** or 2SA985A-P**	Q135, Q136

**hfe of Q133–Q136 should have the same value.

2SC1384	Q140
MZ-061 (WZ-061)	D101–D106
STV2H	D109, D110
10E2	D111, D112, D117, D118
1S1555 (1S2076)	D113–D116
1S2471	D129, D130, D132, D133
MZ-150 (WZ-150)	D131
TH103-2	Th101, Th102

OTHERS

Part No.	Symbol & Description	
ASR-068 PBZ30P060FMC	RL1	Relay

Parts List of Indicator Assembly (AWV-008)

CAPACITORS

Part No.	Symbol & Description	
ACM-010	TC1	Ceramic trimmer
CQMA 473J 50	C1, C2	
CEANL 010M 50	C3, C4	
CEANL 4R7M 50	C5, C6	
CQMA 332J 50	C7, C8	
CEA 470M 16L	C9	
CEA 101M 25L	C10	
CKDYF 103Z 50	C12, C14, C17–C21, C28	
CKDYX 473M 25	C13, C15, C25–C27, C29, C30	
CEA 471M 10L	C16, C32	
CCDCH 101K 50	C22	
CCDCH 020C 50	C24	
CKDYF 473Z 50	C31	
CCDSL 101K 50	C34, C36	
CEA 221M 16L	C35	
CEA 010M 50L	C37–C43	

Note: When ordering resistors, convert the resistance value into code form, and then rewrite the part no. as before.

RESISTORS

Part No.	Symbol & Description	
ACP-007	VR1, VR2	Semi-fixed
RD¼PM □□□ J	R1–R33, R35–R63	

SEMICONDUCTORS

Part No.	Symbol & Description
TA7318P-A	Q1
HA12010	Q2, Q3
M54451P	Q4
PD5009	Q5
2SC2575 (2SC945A)	Q6–Q10
2SC461-B	Q11
2-1K261	D1–D4

OTHERS

Part No.	Symbol & Description	
T24-028	L1, L2	Choke coil
AAV-007	V1	Fluorescent indicator tube
AAV-008	V2	Fluorescent indicator tube
ASS-011 VCZ30P080FMC	X1	Crystal resonator

Parts List of Equalizer Assembly (AWM-226)

CAPACITORS

Part No.	Symbol & Description
CEANL 4R7M 50	C3, C4, C29, C30
CEA 470M 50L	C1, C2, C17, C18

Part No.	Symbol & Description
CEA 470M 10L	C19, C20
CEA 471M 6L	C9, C10
CEA 220M 50L	C25–C28
CCDSL 220K 50	C23, C24
CCDSL 181K 50	C7, C8
CCDSL 221K 50	C5, C6
CQMA 683K 50	C21, C22
CQPA 122G 50	C15, C16
CQPA 183G 50	C13, C14
CQPA 683G 50	C11, C12
CKDYF 103Z 50	C31
CKDYF 473Z 50	C32

Note: When ordering resistors, convert the resistance value into code form, and then rewrite the part no. as before.

RESISTORS

Part No.	Symbol & Description
RD¼PM □□□ J	R1–R12, R15, R16, R21–R46
RN¼PQ □□□□ F	R13, R14, R17–R20
RS2P □□□ J	R47

SEMICONDUCTORS

Part No.	Symbol & Description
2SA978	Q1, Q2
2SC1775A	Q3, Q4
2SC1885	Q5, Q6
2SA912	Q7, Q8
1S1555 (1S2076)	D1, D2

OTHERS

Part No.	Symbol & Description	
ASG-228	S1	5-gang push switch
AKB-064	Terminal (INPUT)	
AKB-063	Terminal (PRE AMP OUT/POWER AMP IN)	

Parts List of Power Supply Assembly (AWR-210)

CAPACITORS

Part No.	Symbol & Description
ACG-004	C2, C14, C18, C19 Ceramic 0.01/150V
CCDSL 101K 50	C7, C8
CEA 100M 50L	C5, C24
CEA 2R2M 50L	C1
CEA 470M 25L	C9
CEA 101M 25L	C16
CEA 470M 50L	C12, C13
CEA 470M 63L	C10, C11
CEA 471M 6L	C23
CEA 221M 16L	C17
CEA 331M 25L	C22
CEA 100M 63L	C6
CEA 471M 16L	C20, C21
CEA 102M 35L	C15
CEA 221M 80L	C3, C4

Note: When ordering resistors, convert the resistance value into code form, and then rewrite the part no. as before.

RESISTORS

Part No.	Symbol & Description
RS1P □□□ J	R3, R16, R17
RD½PS □□□ J	R11, R12
⚠ RD½PSF □□□ J	R23, R24
⚠ RD¼PMF □□□ J	R4–R7
RD¼PM □□□ J	R1, R2, R8–R10, R13–R15, R18–R22, R25, R26, R27

SEMICONDUCTORS

Part No.	Symbol & Description
2SK34	Q1, Q2
2SD313P	Q3
2SC1885	Q4
2SA912	Q5
2SB682 (2SB507)	Q6
2SC1915	Q7
2SA905	Q8
2SD313	Q9, Q11
2SC2575	Q10
1S1555 (1S2076)	D1, D11
⚠ 10E2	D2–D5, D7–D10
KZL-140	D6
MZ-110 (WZ-110)	D14
MZ-130 (WZ-130)	D13
MZ-177 (WZ-177)	D12

OTHERS

Part No.	Symbol & Description	
⚠ ATT-678 PBZ30P060FMC VBZ30P060FMC	T1	Heater transformer

Parts List of Detector Assembly (GWX-463)

CAPACITORS

Part No.	Symbol & Description
CCDSL 101J 50	C201
CCDWK 150K 50	C202
CKDYB 471K 50	C204
CKDYF 103Z 50	C206

Note: When ordering resistors, convert the resistance value into code form, and then rewrite the part no. as before.

RESISTORS

Part No.	Symbol & Description
RD¼PM □□□ J	R201–R208

SEMICONDUCTORS

Part No.	Symbol & Description
2SC461-B	Q201
2-1K261	D201, D202

OTHERS

Part No.	Symbol & Description	
ATE-050	T201	FM DET
ASS-012*	X1	Crystal resonator

- The crystal resonator (ASS-012, symbol no.X1) in the detector assembly (GWX-463) is available in 3 different types corresponding to the IF offset values of the FM ceramic filters (ATF-104, symbol nos.F1 ~ F3) in the tuner assembly (GWE-132). These may be identified by the different colored dots (red, blue, orange) at the head. When replacing crystal resonators, check that the matching requirements listed in the following table are met.

Crystal resonator (ASS-012)	FM ceramic filter (ATF-104)
Red	Red (blue or orange also permissible)
Blue	Blue (or brown)
Orange	Orange (or gray)

Parts List of Speakers Terminal Assembly (GWS-222)

Part No.	Symbol & Description
⚠ AKE-054	Terminal (SPEAKERS)
ASX-137	Remote slide switch

Parts List of Switch Assembly (GWS-223)

Part No.	Symbol & Description
ASX-135	Remote push switch

Parts List of Headphones Jack Assembly (GWK-146)

Part No.	Symbol & Description
AKN-030	Phone jack (PHONES)
RS2P 331J	R1, R2

Parts List of Rectifier Assembly (AWR-211)

CAPACITORS

Part No.	Symbol & Description		
ACG-004	C1, C2	Ceramic	0.01/150V
ACH-210	C3, C4	Electrolytic	15000/71V
⚠ ACG-017	C5	Ceramic	0.01/125V

Note: When ordering resistors, convert the resistance value into code form, and then rewrite the part no. as before.

RESISTORS

Part No.	Symbol & Description	
⚠ ACN-019	R1	Wire wound 3.3/20W
⚠ ACN-029	R2	Carbon composition (2.2M/½W)

SEMICONDUCTORS

Part No.	Symbol & Description
⚠ S5151	D1
⚠ S5151R	D2

OTHERS

Part No.	Symbol & Description	
⚠ ASR-069		Relay
⚠ AEX-001	F1	Temperature-sensitive fuse

12. EXPLODED VIEW

Exterior Components

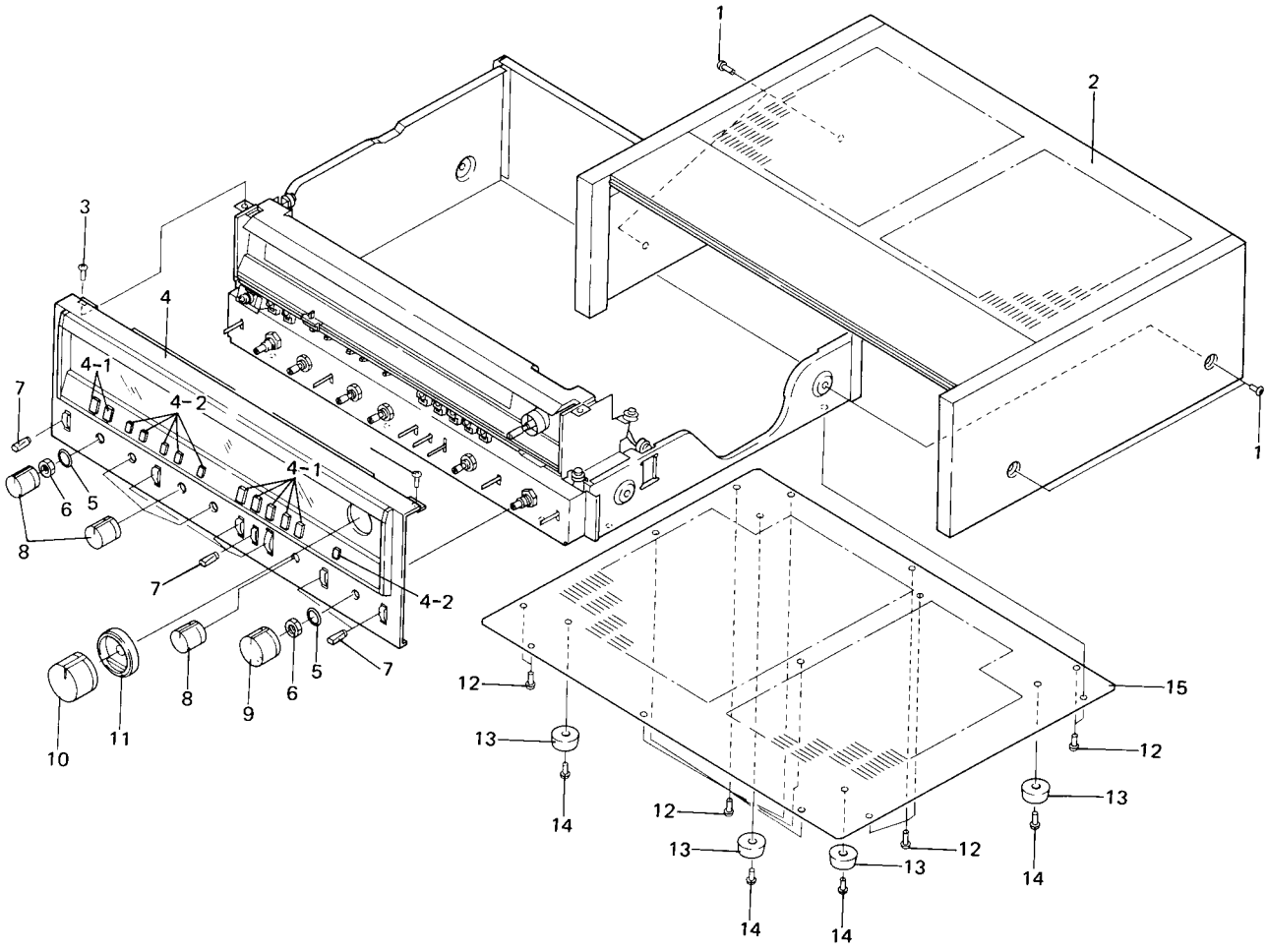

NOTES:

- *Parts without part number cannot be supplied.*
- *The ⚠ mark found on some component parts indicates the importance of the safety factor of the part. Therefore, when replacing, be sure to use parts of identical designation.*

Key No.	Part No.	Description
1.	DCK40P150FZK	
2.	AMM-087	Wooden cover assembly
3.	VBZ30P080FMC	
4.	ANB-861	Front panel assembly
4-1.	AAD-226	Knob A
4-2.	AAD-227	Knob B
5.	WA92F140U100	
6.	NK90FUC	
7.	AAD-139	Knob (for lever switch)
8.	AAB-239	Knob (BASS, TREBLE, TURNOVER, BALANCE)
9.	AAB-238	Knob (VOLUME)
10.	AAA-065	Knob (Tuning)

Key No.	Part No.	Description
11.		Food
12.	VBZ40P080FMC	
13.	AEC-178	Foot assembly
14.	VTZ40P120FMC	
15.		Bottom plate

Interior Components

NOTES:
- *Parts without part number cannot be supplied.*
- *The ⚠ mark found on some component parts indicates the importance of the safety factor of the part. Therefore, when replacing, be sure to use parts of identical designation.*

Key No.	Part No.	Description
1.	GWE-132	Tuner assembly
2.	GWS-220	Switch assembly
3.	GWX-463	Detector assembly
4.	AWV-008	Indicator assembly
5.	AWM-226	Equalizer assembly
6.	GWG-140	Tone amplifier assembly
7.	GWS-221	Switch assembly
8.	AWR-210	Power supply assembly
9.	GWS-222	Speakers terminal assembly
10.	GWS-223	Switch assembly
11.	GWK-146	Headphones jack assembly
12.	AWR-211	Rectifier assembly
13.		Fuse holder assembly
14.		Dial panel
15.		Dial pointer
16.		Shaft cover A
17.		Shaft cover B
18.		Side frame L
19.		Side frame R
20.		Panel frame
21.		Center frame
22.		Rear panel
23.		Center channel
24.		Tuner holder
25.		Heat sink holder
26.		Transformer holder
27.		Scale board holder L
28.		Scale board holder R
29.		EQ holder A
30.		EQ holder B
31.		Reinforced plate
32.		Ground plate
33.		Acrylic board
34.		Spacer A
35.		Spacer B
36.		Rod
37.		Pulley assembly
38.		Pulley assembly S
39.		Tuning drum assembly
40.	AXA-260	Tuning shaft assembly
41.		Spring
42.		Reinforced channel
43.		Mounting clamp
⚠ 44.	ASK-507	Lever switch (POWER)
45.	ASX-128	Remote switch
46.	ASX-131	Remote switch
47.		Remote belt
48.		Remote belt
49.		Remote belt
⚠ 50.	ACG-001	Ceramic capacitor
⚠ 51.	AKP-041	AC socket (AC OUTLETS)
⚠ 52.	ADG-029	AC power cord
53.		Terminal (GND)
54.	AKB-076	Terminal (AM STEREO OUT)
⚠ 55.	ATT-676	Power transformer
56.	ATB-624	Bar-antenna
⚠ 57.	ATT-675	Power transformer
58.	AEL-029	Lamp (wedge type)
⚠ 59.	AEK-106	Fuse (1A)
⚠ 60.	AEK-102	Fuse (2.5A)
⚠ 61.	AEK-305	Fuse (10A)
62.	AEL-069	Lamp with wires
63.	AEL-095	Lamp with wires
64.	AEL-047	Lamp with wires
65.	AEL-075	Lamp with wires
66.	AEC-327	Strain relief
67.		Plate
68.	AKK-005	Lamp socket
69.	AKM-004	Jumper plug
70.		Smoother
71.		Ground terminal 2-P
72.		Lamp holder
73.		Capacitor cover
74.	ABA-176	Special screw
75.	ABE-001	Internal toothed lock washer
76.	ABN-050	Union nut
77.	NK90FUC	
78.	WA92F140U100	
79.	WA35F100N080	
80.	AEC-525	Nylon rivet
81.	BBT30P080FZK	
82.	VBZ30P060FMC	
83.	PMT30P060FZK	
84.	MTZ30P100FZK	
85.	VBZ30P080FMC	
86.	PMZ50P080FMC	
87.	PMZ30P060FMC	
88.	VBZ40P080FMC	
89.	PMZ30P120FMC	
90.	AEL-065	Lamp with wires

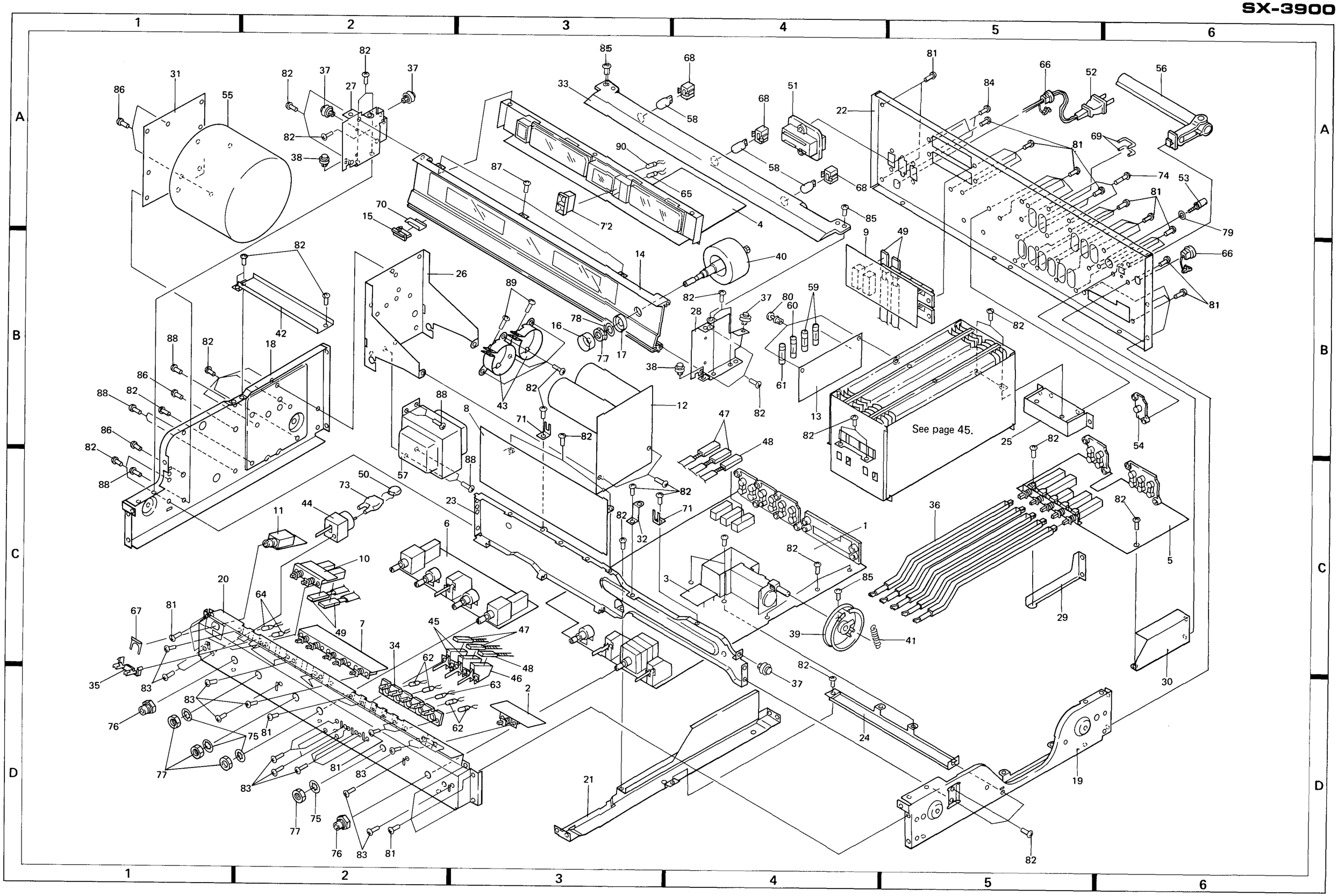
See page 45.

Heat Sink

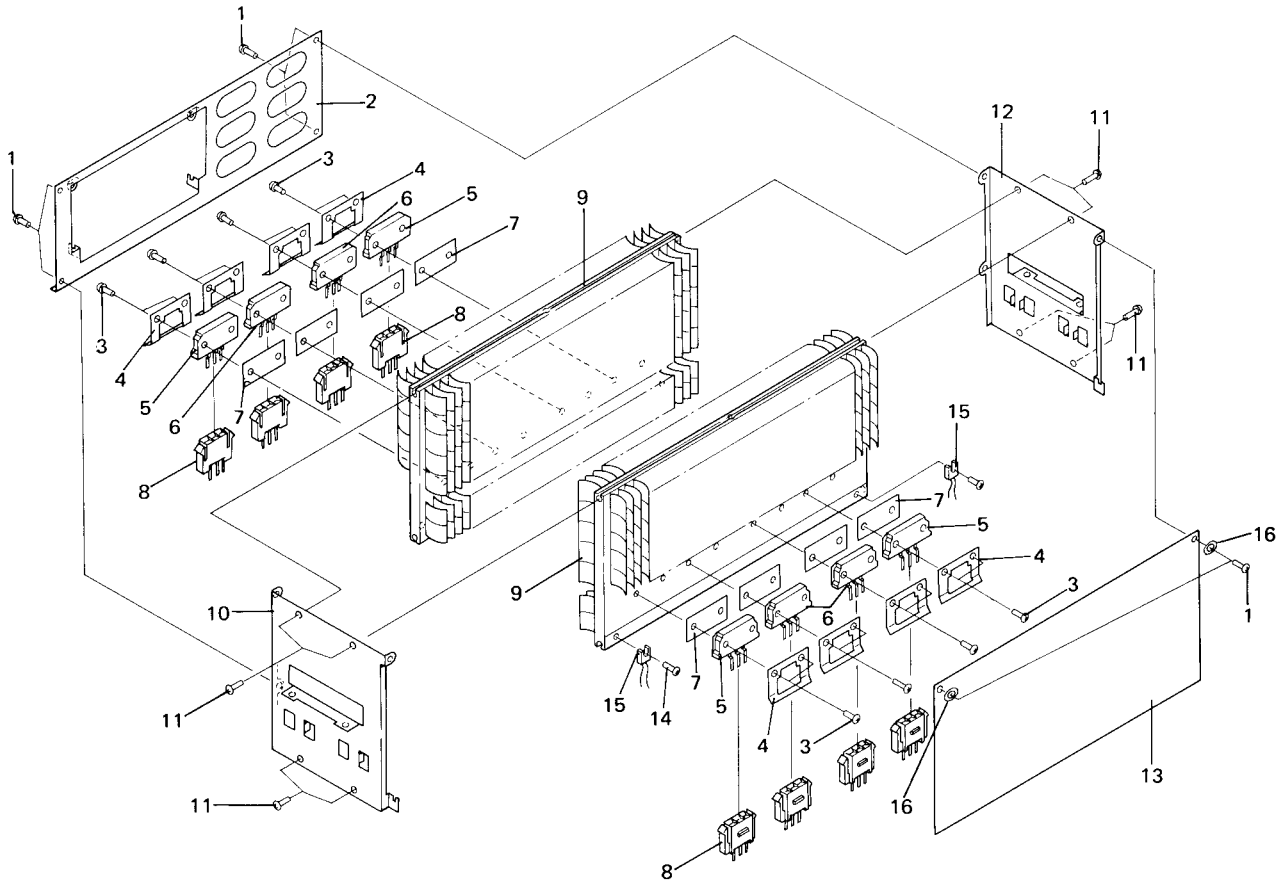

NOTES:

- *Parts without part number cannot be supplied.*
- *The ⚠ mark found on some component parts indicates the importance of the safety factor of the part. Therefore, when replacing, be sure to use parts of identical designation.*

Key No.	Part No.	Description
1.	VBZ30P060FMC	
2.		Holder
3.	VMH30P120FMC	
4.		Socket stopper
5.	2SC2526	
6.	2SA1076	
7.	AEC-488	Insulator wafer
8.	AKH-010	Transistor socket
9.		Heat sink
10.		PA holder A
11.	BBT30P080FZK	
12.		PA holder B
13.	AWH-097	Power amplifier assembly
14.	VBZ30P080FMC	
15.	STV2H	
16.	WA33F100M100	

13. PACKING

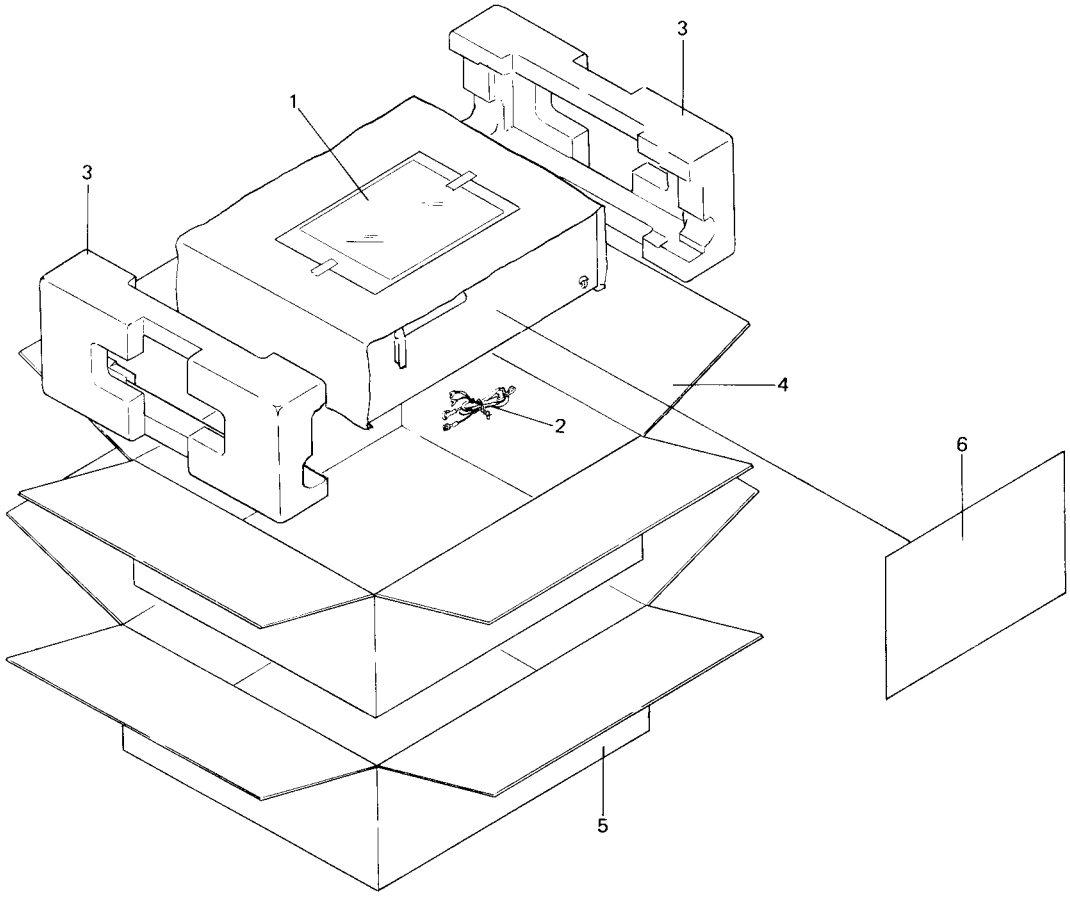

Parts List

Key No.	Part No.	Description
1.	ARB-354	Operating instructions
2.	ADH-002	T-type FM antenna
3.	AHA-247	Side pad
4.	AHC-042	Inside packing
5.	AHD-756	Packing case
6.	AHA-251	Rear pad

PIONEER®

SERVICE INFORMATION

No. SI-A84016
Date: November, 1983

MODEL: SX-3900/KU, S/G

SUBJECT: Addition of resistors into Power Amp Assembly.

REASON: For easier Idle current adjustment.

R200, R201 : (Added) ⟶ 100Ω
RD1/4PM101JNL

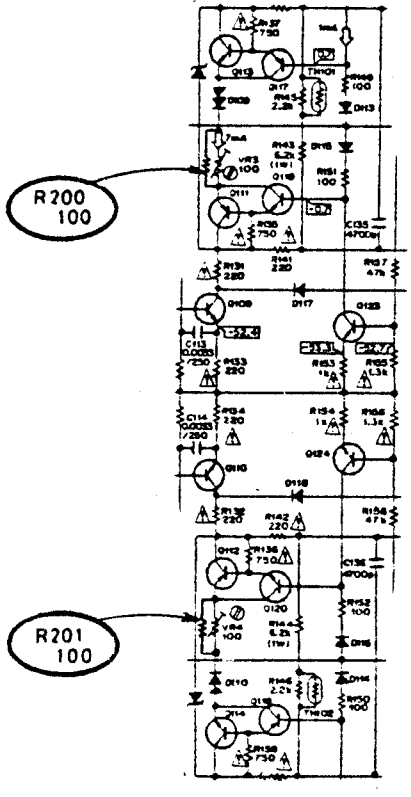

SERVICE MANUAL PAGE:

SX-3900 series [ART-457] ------ 27, 55

APPLICABLE SERIAL No. :

SX-3900/KU 3603601～
SX-3900/S/G 2904551～

POST OFFICE BOX 1760
LONG BEACH, CALIFORNIA 90801
PHONE: 213/420-5700 FAX: (213)420-5902

(J-W-C)

PIONEER ELECTRONICS (USA) INC.
TECHNICIAL INFORMATION CENTER

ADDITIONAL

Service Manual

PIONEER

SX-3900 S/G

The basic performance of the S/G type is the same as the KU type. This additional service manual is applicable to the S/G type, please refer to the KU type service manual with exception of this supplements.

SPECIFICATIONS

The specifications for S/G type is the same as the KU type except for following sections;

Miscellaneous

Power Requirements . . . . . AC 110/120/220/240V (switchable) 50/60Hz
Power Consumption 310W
Weight (without package) 21kg
(46 lb 5 oz)

CONTRAST OF MISCELLANEOUS PARTS

- *The ⚠ mark found on some component parts indicates the importance of the safety factor of the part. Therefore, when replacing, be sure to use parts of identical designation.*

SEMICONDUCTORS

Symbol	Description	Part No.		Remarks
		KU type	S/G type	
Q1-Q4	Transistor	2SC2526	2SC2526	
Q5-Q8	Transistor	2SA1076	2SA1076	

FUSES

Symbol	Description	Part No.		Remarks
		KU type	S/G type	
⚠ FU1	Fuse (10A)	AEK-305	AEK-110	
⚠ FU2	Fuse (2.5A)	AEK-102	AEK-102	
⚠ FU3	Fuse (1A)	AEK-106	AEK-106	
⚠ FU4	Fuse (1A)	AEK-106	AEK-106	
⚠ FU5	Fuse (5A)	.....	AEK-108	

LAMPS

Symbol	Description	Part No.		Remarks
		KU type	S/G type	
PL1	Lamp (wedge type)	AEL-029	AEL-029	
PL2	Lamp (wedge type)	AEL-029	AEL-029	
PL3	Lamp (wedge type)	AEL-029	AEL-029	
PL4	Lamp with wires	AEL-069	AEL-069	
PL5	Lamp with wires	AEL-069	AEL-069	
PL6	Lamp with wires	AEL-095	AEL-095	
PL7	Lamp with wires	AEL-069	AEL-069	
PL8	Lamp with wires	AEL-069	AEL-069	
PL9	Lamp with wires	AEL-047	AEL-047	
PL10	Lamp with wires	AEL-047	AEL-047	
PL11	Lamp with wires	AEL-075	AEL-075	
PL12	Lamp with wires	AEL-065	AEL-065	

SWITCHES

Symbol	Description	Part No.		Remarks
		KU type	S/G type	
⚠ S17	Lever (POWER)	ASK-507	ASK-508	
	Remote lever (ADAPTOR, DUPLICATE)	ASX-128	ASX-128	
	Remote lever (TAPE MONITOR)	ASX-131	ASX-131	
⚠	Line voltage selector	.....	AKX-063	

P.C. BOARD ASSEMBLIES

Symbol	Description	Part No.		Remarks
		KU type	S/G type	
	Tuner assembly	GWE-132	GWE-132	
	Switch assembly	GWS-220	GWS-220	
	Detector assembly	GWX-463	GWX-463	
	Indicator assembly	AWV-008	AWV-008	
	Equalizer assembly	AWM-226	AWM-226	
	Tone amplifier assembly	GWG-140	GWG-140	
	Switch assembly	GWS-221	GWS-221	
	Power amplifier assembly	AWH-097	AWH-097	
	Power supply assembly	AWR-210	AWR-210	
	Speakers terminal assembly	GWS-222	GWS-222	
	Switch assembly	GWS-223	GWS-223	
	Headphones jack assembly	GWK-146	GWK-146	
	Rectifier assembly	AWR-211	AWR-214	
	De-emphasis assembly	.....	AWS-147	

OTHERS

Symbol	Description	Part No.		Remarks
		KU type	S/G type	
⚠ C1	Ceramic capacitor	ACG-001	ACG-001	
C2, C3		CQMA 224K 250	CQMA 224K 250	
T1	Power transformer	ATT-676	ATT-682	
T2	Power transformer	ATT-675	ATT-681	
T3	Bar-antenna	ATB-624	ATB-624	
⚠	AC socket (AC OUTLETS)	AKP-041	AKP-041	
⚠	AC power cord	ADG-029	ADG-049	
	Terminal (AM STEREO OUT)	AKB-076	AKB-076	
	Transistor socket	AKH-010	AKH-010	
	Lamp socket	AKK-005	AKK-005	
	Jumper plug	AKM-004	AKM-004	

PACKING

Symbol	Description	Part No.		Remarks
		KU type	S/G type	
	Packing case	AHD-756	AHD-757	
	Inside packing	AHC-042	AHC-042	
	Side pad	AHA-247	AHA-247	
	Cardboard spacer	.....	AHB-089	
	Rear pad	AHA-251	AHA-251	

FURNISHED PARTS

Symbol	Description	Part No.		Remarks
		KU type	S/G type	
	Operating instructions	ARB-354	ARB-356	
	T type FM antenna	ADH-002	ADH-002	

Rectifier Assembly (AWR-214)

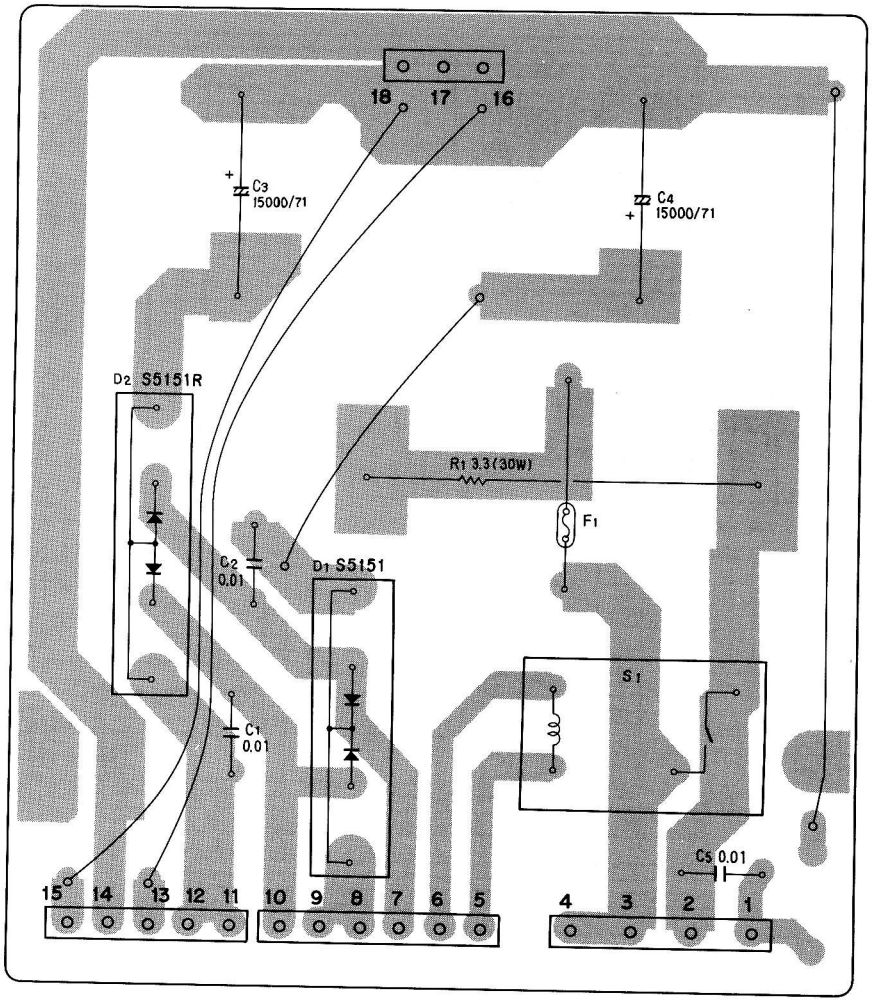

Fuse Holder Assembly (for S/G type)

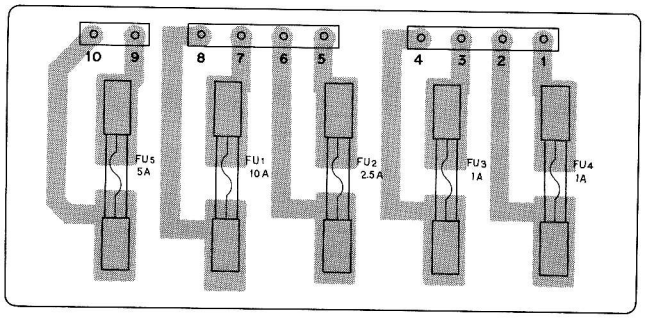

De-emphasis Assembly (AWS-147)

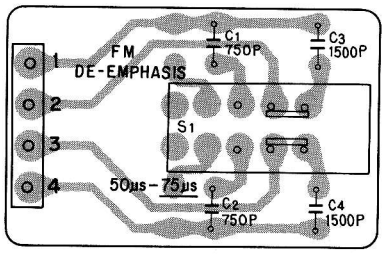

Parts List of Rectifier Assembly (AWR-214)

CAPACITORS

Part No.	Symbol & Description		
ACG-004	C1, C2	Ceramic	0.01/150V
ACH-210	C3, C4	Electrolytic	15000/71V
ACG-001	C5	Ceramic	0.01/250V

Note: When ordering resistors, convert the resistance value into code form, and then rewrite the part no. as before.

RESISTOR

Part No.	Symbol & Description		
ACN-019	R1	Wire wound	3.3/20W

SEMICONDUCTORS

Part No.	Symbol & Description
S5151	D1
S5151R	D2

OTHERS

Part No.	Symbol & Description	
ASR-069	Relay	
AEX-001	F1	Temperature-sensitive fuse

Parts List of De-emphasis Assembly (AWS-147)

Part No.	Symbol & Description	
CQSH 751J 50	C1, C2	
CQSH 152J 50	C3, C4	
ASH-015	S1	Slide switch

SX-3900/S/G

SCHEMATIC DIAGRAM FOR S/G TYPE

NOTE:
The indicated semiconductors are representative ones only. Other alternative semiconductors may be used and are listed in the parts list.

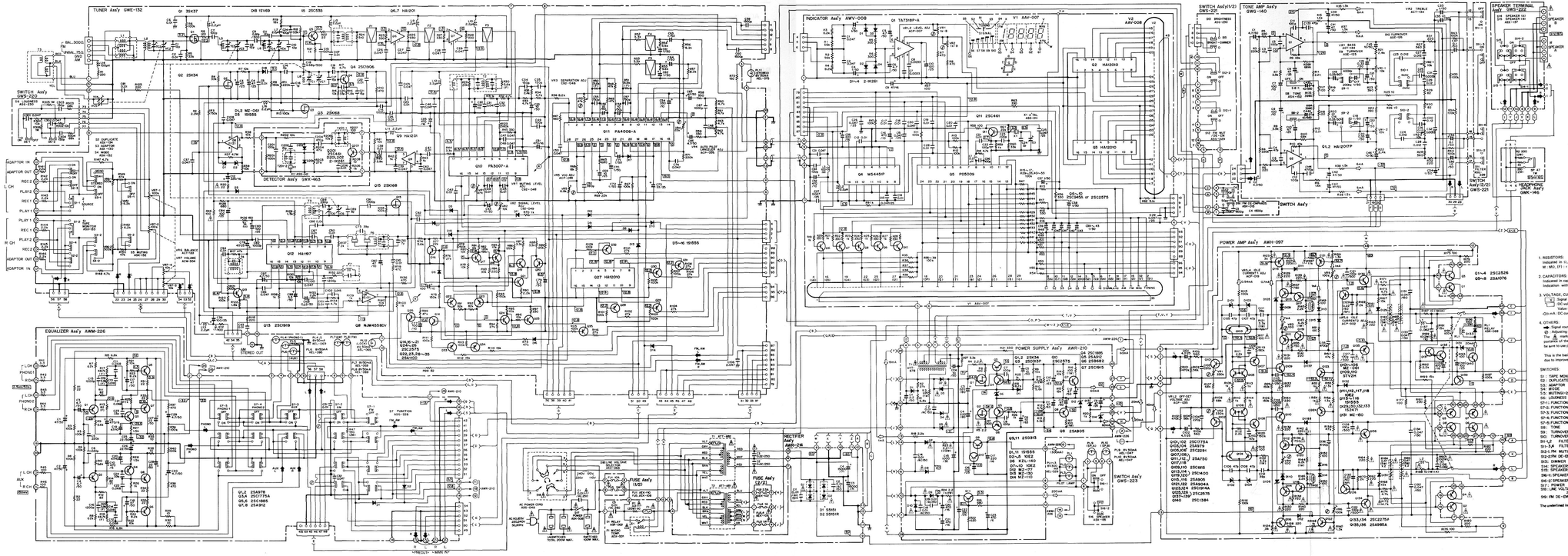

1. RESISTORS:
Indicated in Ω, 1/8W, ±5% tolerance unless otherwise noted k : kΩ, M : MΩ, (F) : ±1%, (G) : ±2%, (J) : ±5% tolerance

2. CAPACITORS:
Indicated in capacity (μF) voltage (V) unless otherwise noted p : pF
Indication without voltage is 50V except electrolytic capacitor.

3. VOLTAGE CURRENT:
Signal voltage at 120 W + 120 W Bω output (1kHz)
DC voltage (V) at no input signal
Value in ( ) is DC voltage at rated power.
DC current at no input signal

4. OTHERS:
Signal route.
Adjusting point.
The ⚠ mark found on some component parts indicates the importance of the safety factor of the part. Therefore, when replacing, be sure to use parts of identical designation.

This is the basic schematic diagram, but the actual circuit may vary due to improvements in design.

SWITCHES:

S1 : TAPE MONITOR	1—SOURCE—2	
S2 : DUPLICATE	ON—OFF	
S3 : ADAPTOR	ON—OFF	
S4 : MODE	ST—MONO	
S5 : MUTING(-20dB)	ON—OFF	
S6 : LOUDNESS	ON—OFF	
S7-1 : FUNCTION (TAPE)	ON—OFF	
S7-2 : FUNCTION (TUNER)	ON—OFF	
S7-3 : FUNCTION (AUX)	ON—OFF	
S7-4 : FUNCTION (PHONO2)	ON—OFF	
S7-5 : FUNCTION (PHONO1)	ON—OFF	
S8 : TONE	ON—OFF	
S9 : TURNOVER (Hz)	400—400	
S10 : TURNOVER (Hz)	2k—2k	
S11-2 : FILTER (2kHz)	ON—OFF	
S11-3 : FILTER (18kHz)	ON—OFF	
S12-1 : TAPE MUTING	ON—OFF	
S12-2 : TAPE EMPHASIS(20μs)	ON—OFF	
S13 : MONITOR	ON—OFF	
S14 : SPEAKERS(A)	ON—OFF	
S15 : SPEAKERS(B)	ON—OFF	
S6-C : SPEAKERS (SP A)	ON—OFF	
S6-D : SPEAKERS (SP B)	ON—OFF	
S17 : POWER	ON—OFF	
S18 : LINE VOLTAGE SELECTOR	220V—110V	
S19 : PM DE-EMPHASIS	50μs—75μs	

The underlined indicates the switch position.

PIONEER ELECTRONIC CORPORATION 4-1, Meguro 1-Chome, Meguro-ku, Tokyo 153, Japan
U.S. PIONEER ELECTRONICS CORPORATION 85 Oxford Drive, Moonachie, New Jersey 07074, U.S.A.
PIONEER ELECTRONIC (EUROPE) N.V. Luitlagen-Haven 9, 2030 Antwerp, Belgium
PIONEER ELECTRONICS AUSTRALIA PTY. LTD. 178-184 Boundary Road, Braeside, Victoria 3195, Australia

(ART-457-0)

Y © DEC. 1979 Printed in Japan