TX-5

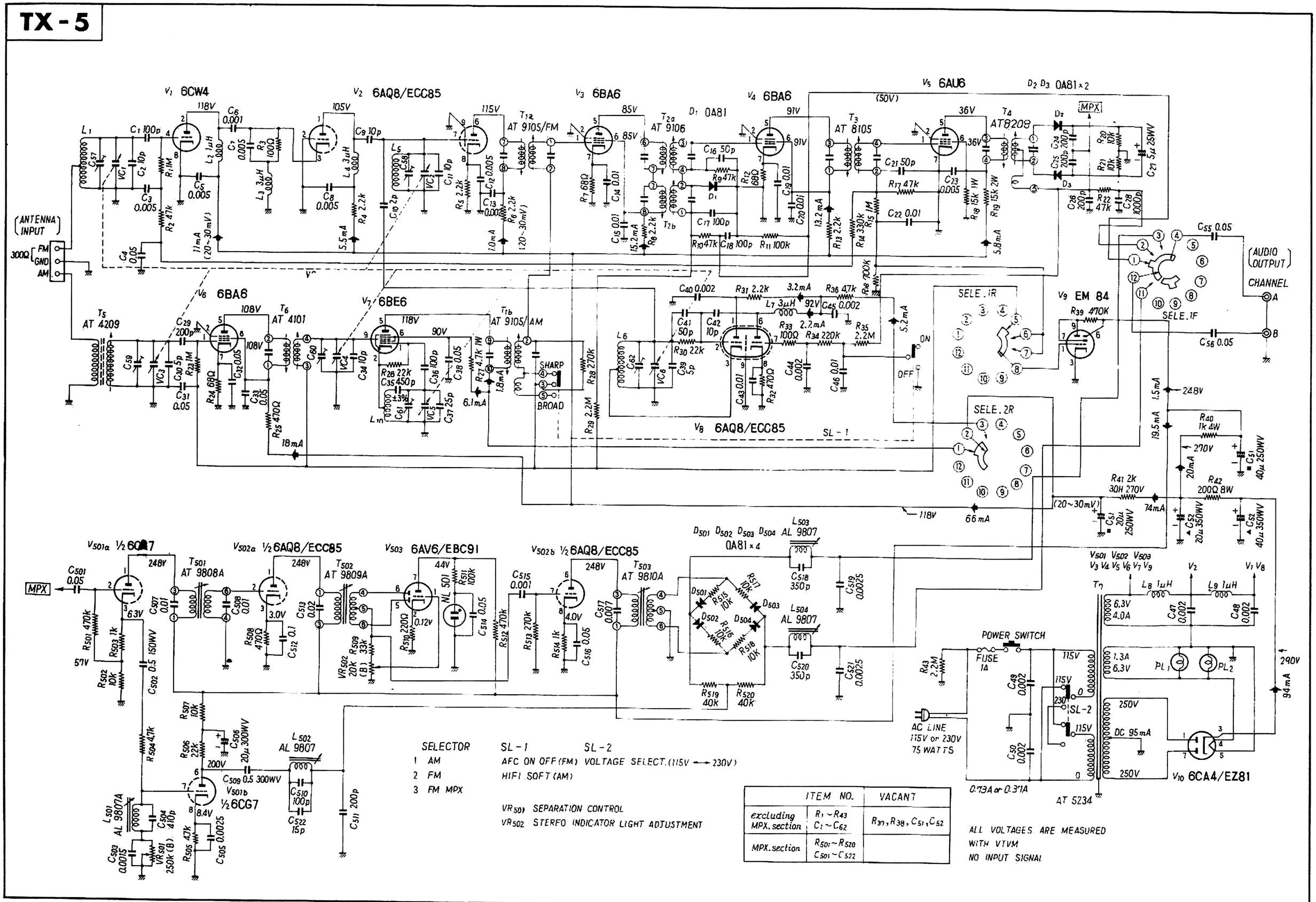

	ITEM NO.	VACANT
excluding MPX. section	R_1 ~ R_{43} C_1 ~ C_{62}	R_{37}, R_{38}, C_{51}, C_{52}
MPX. section	R_{501} ~ R_{520} C_{501} ~ C_{522}	