Pioneer sound.vision.soul

Service Manual

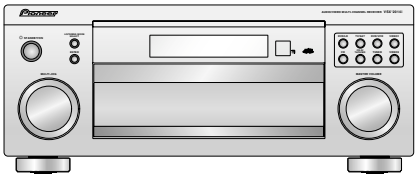

VSX-2014i-S

ORDER NO.
RRV3008

AUDIO/VIDEO MULTI-CHANNEL RECEIVER

VSX-2014i-S
VSX-1014-S
VSX-1014-K

THIS MANUAL IS APPLICABLE TO THE FOLLOWING MODEL(S) AND TYPE(S).

Model	Type	Porew Requirement	The voltage can be converted by the following method.
VSX-2014i-S	HYXJ	AC220-230V	AC240V, *
VSX-1014-S	HYXJ	AC220-230V	AC240V, *
VSX-1014-K	HYXJ	AC220-230V	AC240V, *

***:Alter the wiring of the power-supply block at the primary winding of Power transformer referring to the Line Voltage Selection described in Service Manual.**

For details, refer to "Important symbols for good services".

PIONEER CORPORATION 4-1, Meguro 1-chome, Meguro-ku, Tokyo 153-8654, Japan
PIONEER ELECTRONICS (USA) INC. P.O. Box 1760, Long Beach, CA 90801-1760, U.S.A.
PIONEER EUROPE NV Haven 1087, Keetberglaan 1, 9120 Melsele, Belgium
PIONEER ELECTRONICS ASIACENTRE PTE. LTD. 253 Alexandra Road, #04-01, Singapore 159936
ⓒ**PIONEER CORPORATION 2004**

T-ZZR AUG. 2004 printed in Japan

SAFTY INFORMATION

This service manual is intended for qualified service technicians; it is not meant for the casual do-it-yourselfer. Qualified technicians have the necessary test equipment and tools, and have been trained to properly and safely repair complex products such as those covered by this manual.

Improperly performed repairs can adversely affect the safety and reliability of the product and may void the warranty. If you are not qualified to perform the repair of this product properly and safely, you should not risk trying to do so and refer the repair to a qualified service technician.

WARNING

This product contains lead in solder and certain electrical parts contain chemicals which are known to the state of California to cause cancer, birth defects or other reproductive harm.

Health & Safety Code Section 25249.6 – Proposition 65

NOTICE

(FOR CANADIAN MODEL ONLY)

Fuse symbols (fast operating fuse) and/or (slow operating fuse) on PCB indicate that replacement parts must be of identical designation.

REMARQUE

(POUR MODÈLE CANADIEN SEULEMENT)

Les symboles de fusible (fusible de type rapide) et/ou (fusible de type lent) sur CCI indiquent que les pièces de remplacement doivent avoir la même désignation.

(FOR USA MODEL ONLY)

1. SAFETY PRECAUTIONS

The following check should be performed for the continued protection of the customer and service technician.

LEAKAGE CURRENT CHECK

Measure leakage current to a known earth ground (water pipe, conduit, etc.) by connecting a leakage current tester such as Simpson Model 229-2 or equivalent between the earth ground and all exposed metal parts of the appliance (input/output terminals, screwheads, metal overlays, control shaft, etc.). Plug the AC line cord of the appliance directly into a 120V AC 60 Hz outlet and turn the AC power switch on. Any current measured must not exceed 0.5 mA.

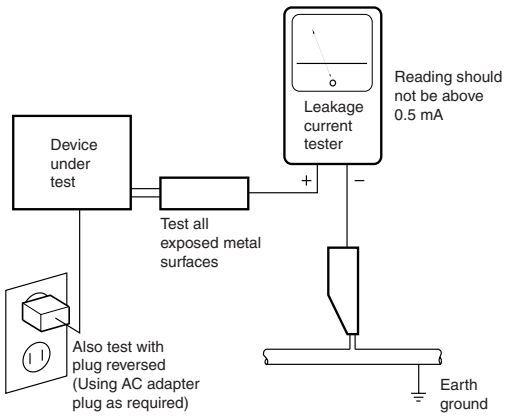

AC Leakage Test

ANY MEASUREMENTS NOT WITHIN THE LIMITS OUTLINED ABOVE ARE INDICATIVE OF A POTENTIAL SHOCK HAZARD AND MUST BE CORRECTED BEFORE RETURNING THE APPLIANCE TO THE CUSTOMER.

2. PRODUCT SAFETY NOTICE

Many electrical and mechanical parts in the appliance have special safety related characteristics. These are often not evident from visual inspection nor the protection afforded by them necessarily can be obtained by using replacement components rated for voltage, wattage, etc. Replacement parts which have these special safety characteristics are identified in this Service Manual.

Electrical components having such features are identified by marking with a ⚠ on the schematics and on the parts list in this Service Manual.

The use of a substitute replacement component which does not have the same safety characteristics as the PIONEER recommended replacement one, shown in the parts list in this Service Manual, may create shock, fire, or other hazards.

Product Safety is continuously under review and new instructions are issued from time to time. For the latest information, always consult the current PIONEER Service Manual. A subscription to, or additional copies of, PIONEER Service Manual may be obtained at a nominal charge from PIONEER.

[Important symbols for good services]
In this manual, the symbols shown-below indicate that adjustments, settings or cleaning should be made securely.
When you find the procedures bearing any of the symbols, be sure to fulfill them:

1. Product safety

You should conform to the regulations governing the product (safety, radio and noise, and other regulations), and should keep the safety during servicing by following the safety instructions described in this manual.

2. Adjustments

To keep the original performances of the product, optimum adjustments or specification confirmation is indispensable. In accordance with the procedures or instructions described in this manual, adjustments should be performed.

3. Cleaning

For optical pickups, tape-deck heads, lenses and mirrors used in projection monitors, and other parts requiring cleaning, proper cleaning should be performed to restore their performances.

4. Shipping mode and shipping screws

To protect the product from damages or failures that may be caused during transit, the shipping mode should be set or the shipping screws should be installed before shipping out in accordance with this manual, if necessary.

5. Lubricants, glues, and replacement parts

Appropriately applying grease or glue can maintain the product performances. But improper lubrication or applying glue may lead to failures or troubles in the product. By following the instructions in this manual, be sure to apply the prescribed grease or glue to proper portions by the appropriate amount.For replacement parts or tools, the prescribed ones should be used.

CONTENTS

SAFTY INFORMATION 2
1. SPECIFICATIONS 5
2. EXPLODED VIEWS AND PARTS LIST 6
2.1 PACKING 6
2.2 EXTERIOR SECTION 8
2.3 CHASSIS SECTION 10
2.4 REAR PANEL SECTION 12
2.5 HEAT SINK SECTION 14
2.6 FRONT PANEL SECTION 16
3. BLOCK DIAGRAM AND SCHEMATIC DIAGRAM 18
3.1 BLOCK DIAGRAM 18
3.1.1 AUDIO SECTION 18
3.1.2 VIDEO and DISPLAY SECTIONS 20
3.1.3 DSP and 1394 SECTIONS 22
3.1.4 POWER SUPPLY SECTION 24
3.2 OVERALL WIRING DIAGRAM 26
3.3 MULTI CH I/O and AUDIO CONNECT ASSYS 28
3.4 COMPOSITE V ASSY 30
3.5 S VIDEO and VIDEO SIDE ASSYS 32
3.6 COMPONENT ASSY 34
3.7 OPTICAL-IN,H.P,FRONT-IN,FRONT-IN CONNECT and 12VTRIG. ASSYS 36
3.8 MAIN CONTROL ASSY (1/3) 38
3.9 MAIN CONTROL ASSY (2/3) 40
3.10 MAIN CONTROL ASSY (3/3) 42
3.11 DSP ASSY (1/2) 44
3.12 DSP ASSY (2/2) 46
3.13 1394 ASSY (1/2) (VSX-2014i ONLY) 48
3.14 1394 ASSY (2/2) (VSX-2014i ONLY) 50
3.15 VOLUME, DISPLAY and MULTI JOG ASSYS 52
3.16 POWER AMP IN and POWER PROTECT ASSYS 54
3.17 POWER AMP-L, POSI 1 L and POSI 2 L ASSYS 56
3.18 POWER AMP-R and POSI 1 R ASSYS 58

3.19 REGULATOR ASSY 60
3.20 TRANS 2-1, TRANS 2-2, DIODE, VH TR and SP/PS ASSYS 62
3.21 REAR TOP, TRANS SIDE, TRANS 1 and PRIMARY ASSYS 64
4. PCB CONNECTION DIAGRAM 66
4.1 MULTI CH I/O ASSY 67
4.2 AUDIO CONNECT ASSY 68
4.3 COMPOSITE V ASSY 69
4.4 S VIDEO ASSY 70
4.5 VIDEO SIDE and OPTICAL-IN ASSYS 71
4.6 COMPONENT ASSY 72
4.7 FRONT IN and FRONT-IN CONNECT ASSYS 73
4.8 MAIN CONTROL ASSY 74
4.9 DISPLAY ASSY 78
4.10 HEADPHONE, VOLUME and MULTI JOG ASSYS 80
4.11 POWER AMP IN ASSY 82
4.12 12V TRIGGER ASSY (VSX-2014i ONLY) 83
4.13 DSP ASSY 84
4.14 POWER PROTECT, POWER AMP-L, POSI 1 L and POSI 2 L ASSYS 86
4.15 POWER AMP-R and POSI 1 R ASSYS 90
4.16 REGULATOR ASSY 94
4.17 SP / PS ASSY 98
4.18 TRANS 2-1, DIODE and VH TR ASSYS 100
4.19 TRANS SIDE ASSY 102
4.20 TRANS 2-2, TRANS 1 and PRIMARY ASSYS 104
4.21 REAR TOP ASSY 106
4.22 1394 ASSY (VSX-2014i ONLY) 107
5. PCB PARTS LIST 108
6. ADJUSTMENT 121
7. GENERAL INFORMATION 122
7.1 DIAGNOSIS 122
7.1.1 PROTECTION CIRCUIT CONTROL SPECIFICATION 122
7.1.2 HOW TO DIAGNOSE THE AMPLIFIER SECTION 125
7.1.3 HOW TO DIAGNOSE THE UNIT WITH THE POWER AMPLIFIER SECTION REMOVED 126
7.1.4 DISASSEMBLY 129
7.1.5 TROUBLE SHOOTING OF THE DSP ASSY 133
7.1.6 OUTLINE OF THE 1394 UNIT 142
7.2 PARTS 144
7.2.1 IC 144
7.3 CLEANING 164
8. PANEL FACILITIES 165
8.1 FRONT PANEL 165
8.2 DISPLAY 167
8.3 REMOTE CONTROL UNIT 169

1. SPECIFICATIONS

Specifications

Amplifier section

Continuous Power Output (Stereo)
- Front . . . . . 150 W + 150 W (DIN 1kHz, THD 1%,6Ω)
  120 W + 120 W (DIN 1kHz, THD 1%,8Ω)

Continuous Power Output (Multichannel)
- Front . . . . . 120 W + 120 W (DIN 1kHz, THD 1%,8Ω)
- Center . . . . . 120 W (DIN 1kHz, THD 1%,8Ω)
- Surround . . . . 120 W + 120 W (DIN 1kHz, THD 1%,8Ω)
- Surround back 120 W + 120 W (DIN 1kHz, THD 1%,8Ω)

Rated Power Output (Stereo) . . . . . 140W+140W
(20Hz–20kHz, 0.09%, 6Ω)

Rated Power Output . . . . . 110W+110W
(20Hz–20kHz, 0.09%,8Ω)

- The above specifications are applicable when the power supply is 230V.

Audio Section

Input (Sensitivity/Impedance)
- LINE 335 mV/47kΩ

Frequency Response
- LINE . . . . . 5Hz to 100,000 Hz $^{+0}_{-3}$ dB

Output (Level/Impedance)
- REC . . . . . 335 mV/2.2 kΩ

Tone Control
- BASS . . . . . ± 6 dB (100 Hz)
- TREBLE . . . . . ± 6 dB (10 kHz)
- LOUDNESS . . . . . +4/+2 dB (100Hz/10 kHz)
  (at volume position –40dB)

Signal-to-Noise Ratio (IHF, short circuited, A network)
- LINE . . . . . 103 dB

Signal-to-Noise Ratio
[DIN (continuous rated power output/50mW]
- LINE . . . . . 92/65 dB

Composite Video / S-Video Section

Input (Sensitivity/Impedance) 1 Vp-p/75Ω
Output (Level/Impedance) 1 Vp-p/75Ω
Signal-to-Noise Ratio . . . . . 65 dB
Frequency Response . . . . . 5 Hz to 10 MHz $^{+0}_{-3}$ dB

Component Video Section

Input (Sensitivity/Impedance) 1 Vp-p/75Ω
Output (Level/Impedance) 1 Vp-p/75Ω
Signal-to-Noise Ratio . . . . . 65 dB
Frequency Response . . . . . 5 Hz to 40 MHz $^{+0}_{-3}$ dB

FM Tuner Section

Frequency Range . . . . . 87.5 MHz to 108 MHz
Usable Sensitivity . . . . Mono: 15.2 dBf, IHF (1.6 µV/75 Ω)
50 dB Quieting Sensitivity . . . . . Mono: 20.2 dBf
Stereo:41.2dBf
Sensitivity (DIN) . . . . . Mono: 1.1 µV (S/N 26dB)
Stereo: 50 µV (S/N 46dB)
Signal-to-Noise Ratio . . . . . Mono: 76 dB (at 85 dBf)
Stereo: 72 dB (at 85 dBf)
Signal-to-Noise Ratio (DIN) . . . . . Mono: 62 dB
Stereo: 58 dB
Distortion . . . . . Stereo: 0.6% (1 kHz)
Alternate Channel Selectivity . . . . . 70 dB (400 kHz)
Stereo Separation . . . . . 40 dB (1 kHz)
Frequency Response . . . . . 30 Hz to 15 kHz ± 1dB
Antenna Input . . . . . 75 Ω unbalanced

AM Tuner Section

Frequency Range . . . . 531 kHz to 1,602 kHz (9 kHz step)
Sensitivity (IHF, Loop antenna) . . . . . 350 µV/m
Selectivity . . . . . 30 dB
Signal-to-Noise Ratio . . . . . 50 dB
Antenna . . . . . Loop antenna

Miscellaneous

Power Requirements . . . . . AC 220–230 V, 50/60 Hz
Power Consumption . . . . . 430 W
In standby . . . . . 0.52 W
AC Outlet . . . . . (switched) 100 W MAX.
Dimensions . . . . . 420 (W) x 173 (H) x 465 (D) mm
Weight (without package)
- VSX-2014i . . . . . 15.6 kg
- VSX-1014 . . . . . 15.4 kg

Furnished Parts

Microphone (for Auto MCACC setup) 1
Microphone stand 1
AA/LR6 dry cell batteries 2
Remote control 1
AM loop antenna 1
FM wire antenna 1
Power cord (VSX-2014i only) 1
These operating instructions

Note

- Specifications and the design are subject to possible modifications without notice, due to improvements.

Cleaning the unit

- Use a polishing cloth or dry cloth to wipe off dust and dirt.
- When the surface is dirty, wipe with a soft cloth dipped in some neutral cleanser diluted five or six times with water, and wrung out well, and then wipe again with a dry cloth. Do not use furniture wax or cleansers.
- Never use thinners, benzine, insecticide sprays or other chemicals on or near this unit, since these will corrode the surface.

2. EXPLODED VIEWS AND PARTS LIST

NOTES:
- *Parts marked by "NSP" are generally unavailable because they are not in our Master Spare Parts List.*
- *The ⚠ mark found on some component parts indicates the importance of the safety factor of the part. Therefore, when replacing, be sure to use parts of identical designation.*
- *Screws adjacent to ▼ mark on product are used for disassembly.*
- *For the applying amount of lubricants or glue, follow the instructions in this manual. (In the case of no amount instructions, apply as you think it appropriate.)*

2.1 PACKING

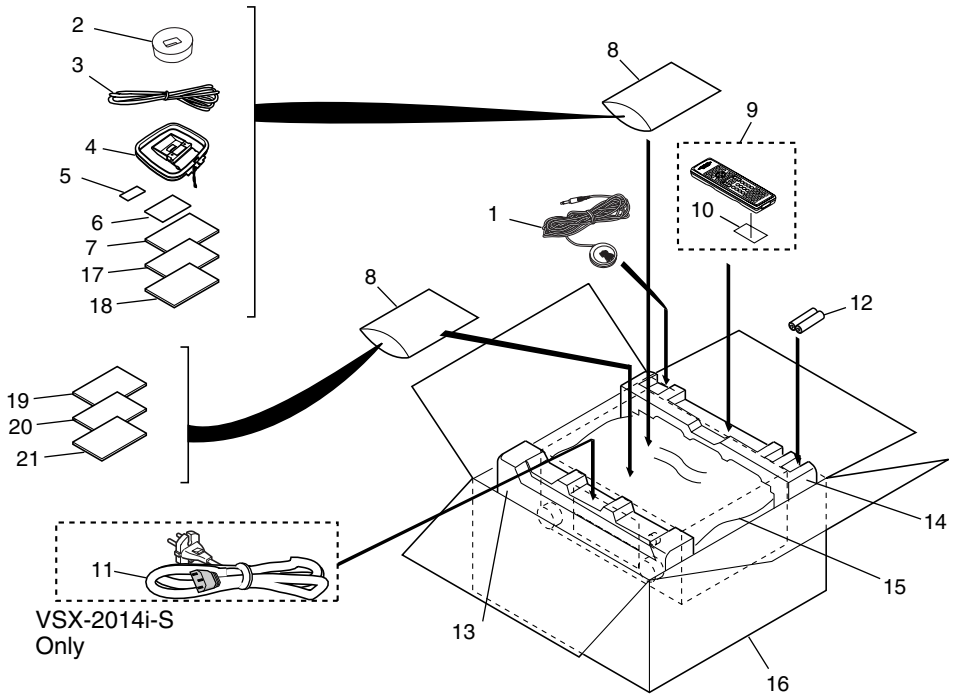

● Accessories

AM Loop Antenna
(ATB7013)

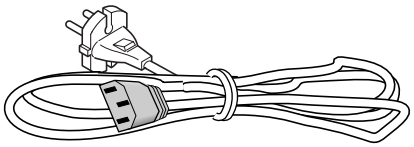

AC Power Cord
(VSX-2014i-S :
ADG7062)Only

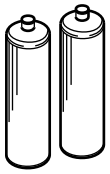

"AA" IEC LR6 batteries

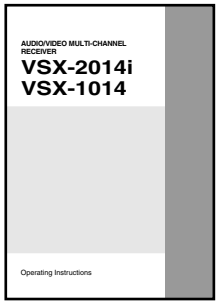

Operating Instructions
(VSX-2014i-S : ARB7311)

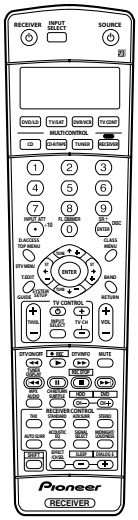

Remote Control Unit
(AXD7383)

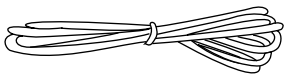

FM Wire Antenna
(ADH7030)

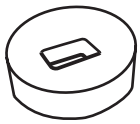

Microphone Stand for Auto
Surround Sound Setup
(AEB7269)

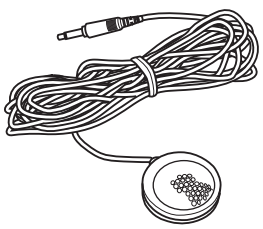

Microphone for Auto
Surround Sound Setup
(APM7004)

(1) PACKING parts List

Mark	No.	Description	Part No.
	1	Microphone for Auto Surround Sound Setup	APM7004
	2	Microphone Stand for Auto Surround Sound Setup	AEB7269
	3	FM Wire Antenna	ADH7030
	4	AM Loop Antenna	ATB7013
	5	Caution Sheet SP,E	ARM7083
NSP	6	Warranty Card	ARY7065
	7	Operating Instructions (English)	ARB7311
NSP	8	Polyethlene Bag(230x340x0.03)	Z21-038
	9	Remote Control Unit	AXD7383
	10	Battery Cover	XZN3140
⚠	11	AC Power Cord	See Contrast table (2)
NSP	12	"AA" IEC LR6 batteries	VEM1023
	13	Front Pad V1	AHA7428
	14	Rear Pad V1	AHA7429
	15	Packing Sheet	RHC1023
	16	Packing Case	See Contrast table (2)
	17	Operating Instructions (Spanish)	ARC7536
	18	Operating Instructions (German)	ARC7537
	19	Operating Instructions (French)	ARC7547
	20	Operating Instructions (Dutch)	ARC7548
	21	Operating Instructions (Italian)	ARC7549

(2) CONTRAST TABLE

VSX-2014i-S/HYXJ, VSX-1014-K/HYXJ and VSX-1014-S/HYXJ are constructed the same except for the following:

Mark	No.	Symbol and Description	VSX-2014i-S /HYXJ	VSX-1014-K /HYXJ	VSX-1014-S /HYXJ
⚠	11	AC Power Cord	ADG7062	Not used	Not used
	16	Packing Case 2014i	AHD8257	Not used	Not used
	16	Packing Case 1014	Not used	AHD8259	AHD8258

2.2 EXTERIOR SECTION

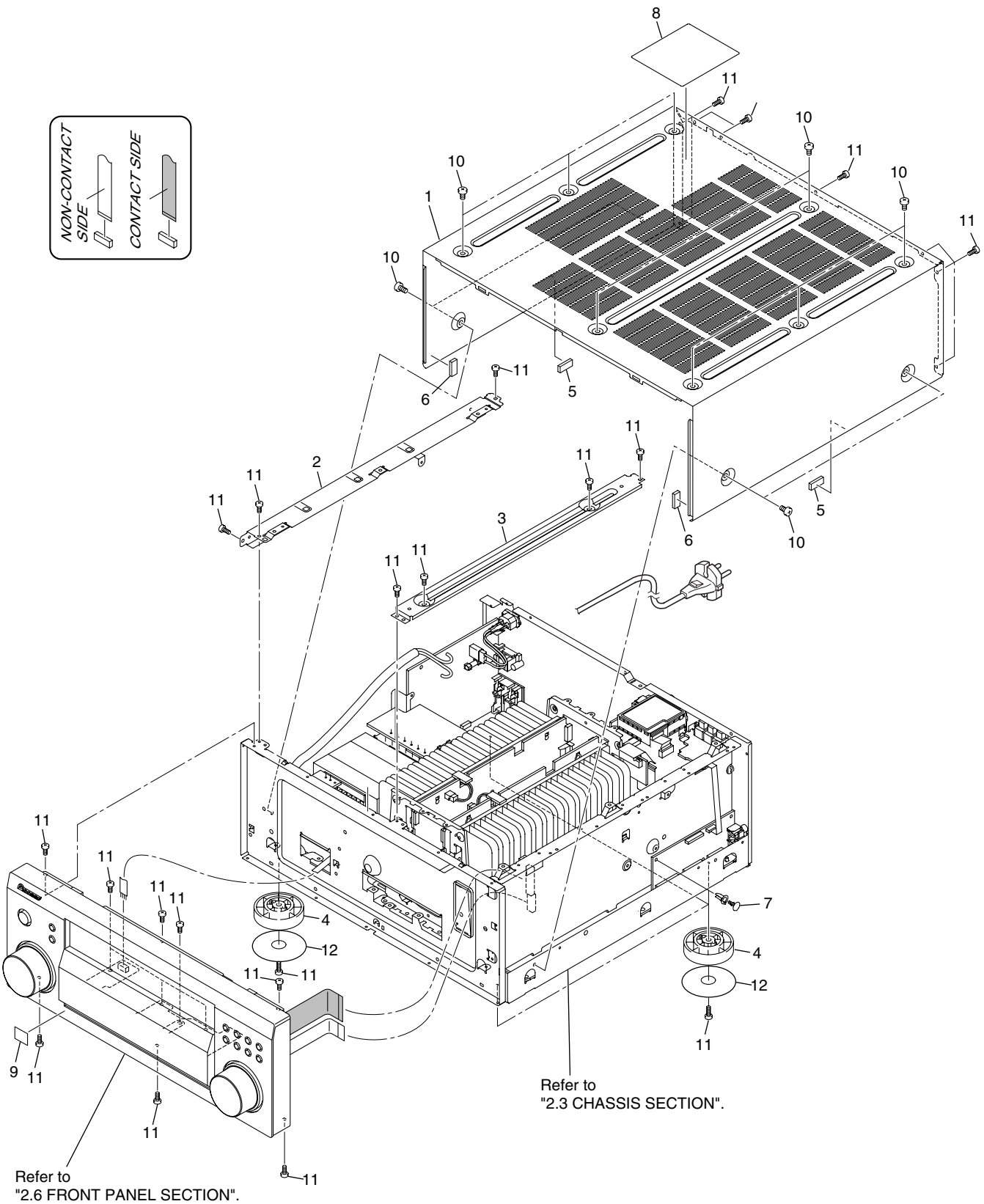

(1) EXTERIOR SECTION parts List

Mark	No.	Description	Part No.
	1	Bonnet Case V1	See Contrast table (2)
	2	Left Beam	ANG7401
	3	Center Beam	ANG7482
	4	Insulator	PNW2766
	5	Spacer (4.5 x 10 x 20)	AEB7355
	6	Spacer 45B (6 x 7 x 13)	AEB7264
	7	Nyron Rivet	AEC7408
	8	Label (DD/DTS/THX)	ARW7281
NSP	9	Getter	See Contrast table (2)
	10	Screw	See Contrast table (2)
	11	Screw	BBZ30P080FCC
	12	Cushion 55	See Contrast table (2)

(2) CONTRAST TABLE

VSX-2014i-S/HYXJ, VSX-1014-K/HYXJ and VSX-1014-S/HYXJ are constructed the same except for the following:

Mark	No.	Symbol and Description	VSX-2014i-S /HYXJ	VSX-1014-K /HYXJ	VSX-1014-S /HYXJ
NSP	1	Bonnet Case V1	AZN7981	AZN7980	AZN7981
	9	Getter	AAX8028	AAX8029	AAX8029
	10	Screw	BBZ40P080FNI	BBZ40P080FZK	BBZ40P080FNI
	12	Cushion 55	PNM1339	Not used	Not used

2.3 CHASSIS SECTION

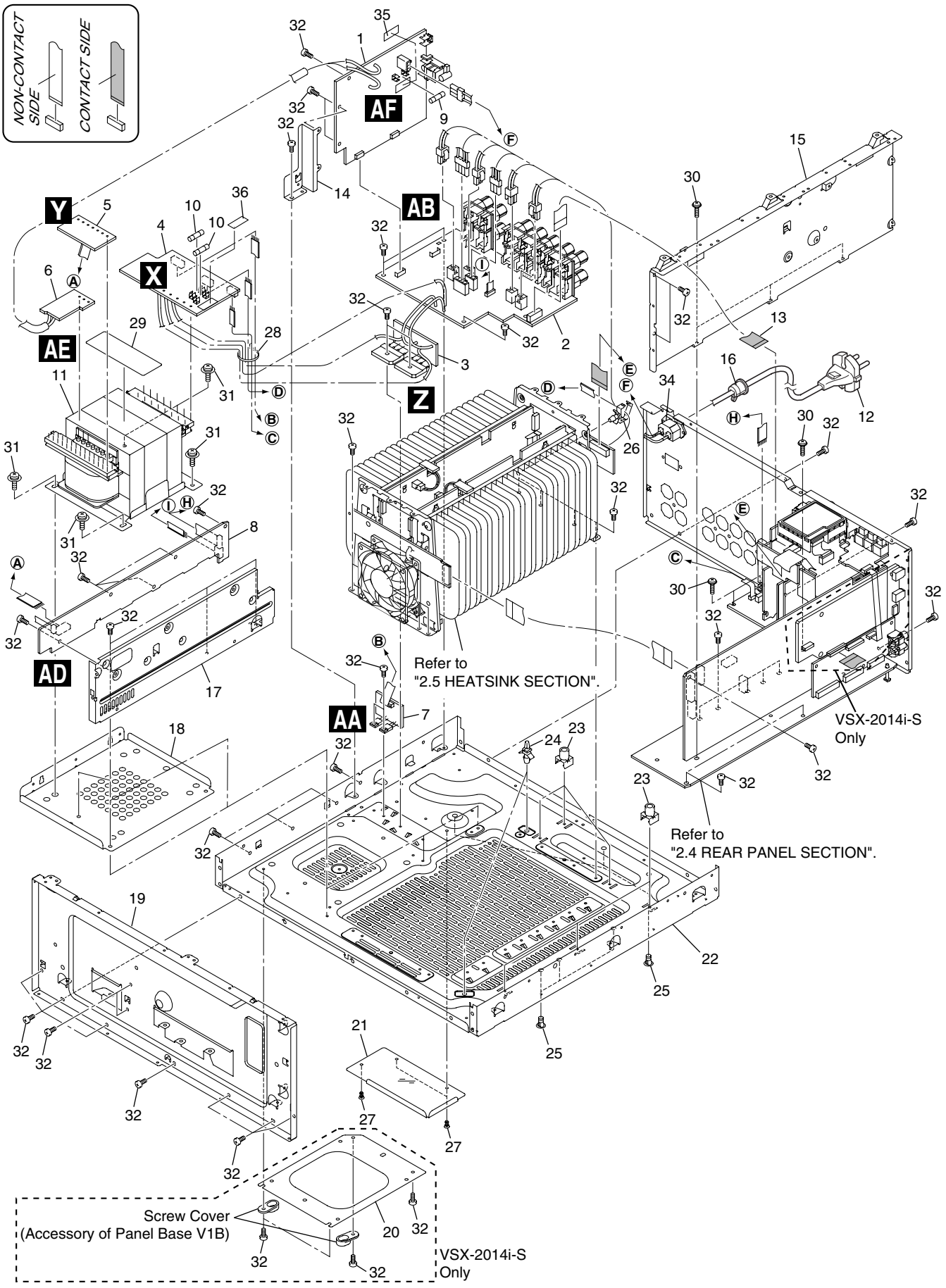

(1) CHASSIS SECTION parts List

Mark	No.	Description	Part No.
	1	PRIMARY Assy	AWX8386
	2	SP/PS Assy	AWX8375
	3	DIODE Assy	AWX8376
	4	TRANS 2-1 Assy	AWX8370
	5	TRANS 2-2 Assy	AWX8371
	6	TRANS 1 Assy	AWX8383
	7	VH TR Assy	AWX8411
	8	TRANS SIDE Assy	AWX8417
⚠	9	Fuse (FU1 : T5.0A)	REK1029
⚠	10	Fuse (FU4, 5 : T2.0A)	REK1025
⚠	11	Power Transformer (T1501)	ATS7375
⚠	12	AC Power Cable	See Contrast table (2)
	13	Flexible Cable (12P)	ADD7477
	14	Primary Angle 56	ANG7526
	15	DSP Shield A V1	ANG7479
	16	Cord Stopper	See Contrast table (2)
	17	Under Beam V1	AND7478
	18	Trans. Frame 45	ANG7399
NSP	19	Panel Stay V1	AND7066
	20	Stabilizer 45	See Contrast table (2)
	21	Screw Cover 45A	AEC7414
NSP	22	Under Base	See Contrast table (2)
	23	PCB Mold	AMR2534
	24	Locking Card Spacer	PNW2917
	25	Card Spacer	DNK2769
	26	Wire Saddle 5S	AEC7500
	27	Push Rivet	AEC7370
NSP	28	Binder (BK-1)	ZCA-BK1
NSP	29	Trans. Label V1	AAX8052
	30	Screw	IBZ30P150FCC
	31	Screw (4x12)	ABA7109
	32	Screw	BBZ30P080FCC
	33	• • • •	
⚠	34	AC Inlet Assy	See Contrast table (2)
NSP	35	Fuse Card	AAX7098
NSP	36	Fuse Card	AAX2357

(2) CONTRAST TABLE

VSX-2014i-S/HYXJ, VSX-1014-K/HYXJ and VSX-1014-S/HYXJ are constructed the same except for the following:

Mark	No.	Symbol and Description	VSX-2014i-S /HYXJ	VSX-1014-K /HYXJ	VSX-1014-S /HYXJ
⚠	12	AC Power Cable	Not used	VDG1080	VDG1080
	16	Cord Stopper	Not used	CM-22B	CM-22B
	20	Stabilizer 45	ANG7408	Not used	Not used
NSP	22	Under Base 52	ANA7166	Not used	Not used
NSP	22	Under Base 1014	Not used	ANA7161	ANA7161
⚠	34	AC Inlet Assy	ADX7411	Not used	Not used

2.4 REAR PANEL SECTION

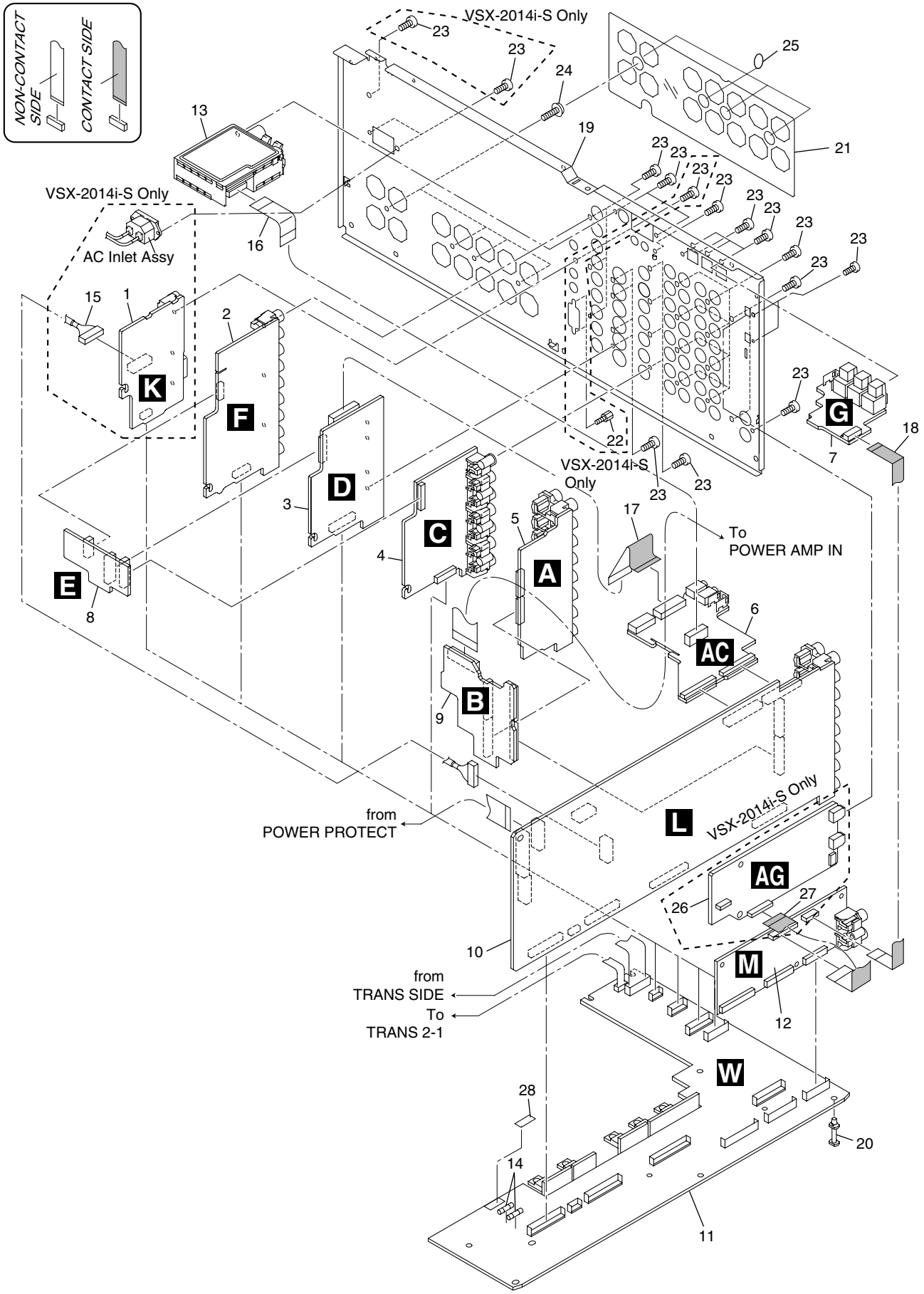

(1) REAR PANEL SECTION parts List

Mark	No.	Description	Part No.
	1	12V TRIGGER Assy	See Contrast table (2)
	2	COMPONENT Assy	See Contrast table (2)
	3	S VIDEO Assy	See Contrast table (2)
	4	COMPOSITE V Assy	See Contrast table (2)
	5	MULTI CH I/O Assy	See Contrast table (2)
	6	REAR TOP Assy	AWX8399
	7	OPTICAL-IN Assy	AWX8394
	8	VIDEO SIDE Assy	AWX8366
	9	AUDIO CONNECT Assy	AWX8382
	10	MAIN CONTROL Assy	See Contrast table (2)
	11	REGULATOR Assy	See Contrast table (2)
	12	DSP Assy	AWX8414
	13	FM/AM TUNER Unit	AXX7170
⚠	14	Fuse (FU2501, 2502 : T1.25A)	REK1023
	15	Connector Assy (8P)	See Contrast table (2)
	16	Flexible Cable (11P)	ADD7476
	17	Flexible Cable (17P)	ADD7478
	18	Flexible Cable (10P)	ADD7472
	19	Rear Panel	See Contrast table (2)
	20	Card Spacer	AEC7502
	21	Speaker Sheet V1	AAK8176
	22	Hexagonal Screw	See Contrast table (2)
	23	Screw	BBZ30P080FCC
	24	Screw	BBT30P100FCC
	25	Cushion Circle 14B	AED7081
	26	1394 Assy	AWK7834
	27	Flexible Cable (22P)	ADD7471
	28	Fuse Card	AAX2348

(2) CONTRAST TABLE

VSX-2014i-S/HYXJ, VSX-1014-K/HYXJ and VSX-1014-S/HYXJ are constructed the same except for the following:

Mark	No.	Symbol and Description	VSX-2014i-S /HYXJ	VSX-1014-K /HYXJ	VSX-1014-S /HYXJ
	1	12V TRIGGER Assy	AWX8395	Not used	Not used
	2	COMPONENT Assy	AWX8359	AWX8360	AWX8360
	3	S VIDEO Assy	AWX8356	AWX8357	AWX8357
	4	COMPOSITE V Assy	AWX8354	AWX8355	AWX8355
	5	MULTI CH I/O Assy	AWX8410	AWX8352	AWX8352
	10	MAIN CONTROL Assy	AWX8345	AWX8350	AWX8350
	11	REGULATOR Assy	AWX8365	AWX8369	AWX8369
	15	Connector Assy (8P)	ADE7085	Not used	Not used
	19	Rear Panel 2014SY	ANC8255	Not used	Not used
	19	Rear Panel 1014BY, SY	Not used	ANC8257	ANC8256
	22	Hexagonal Screw	ABA7078	Not used	Not used
	26	1394 Assy	AWK7834	Not used	Not used
	27	Flexible Cable (22P)	ADD7471	Not used	Not used

2.5 HEAT SINK SECTION

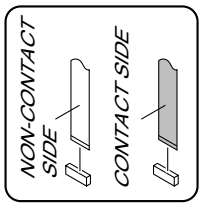

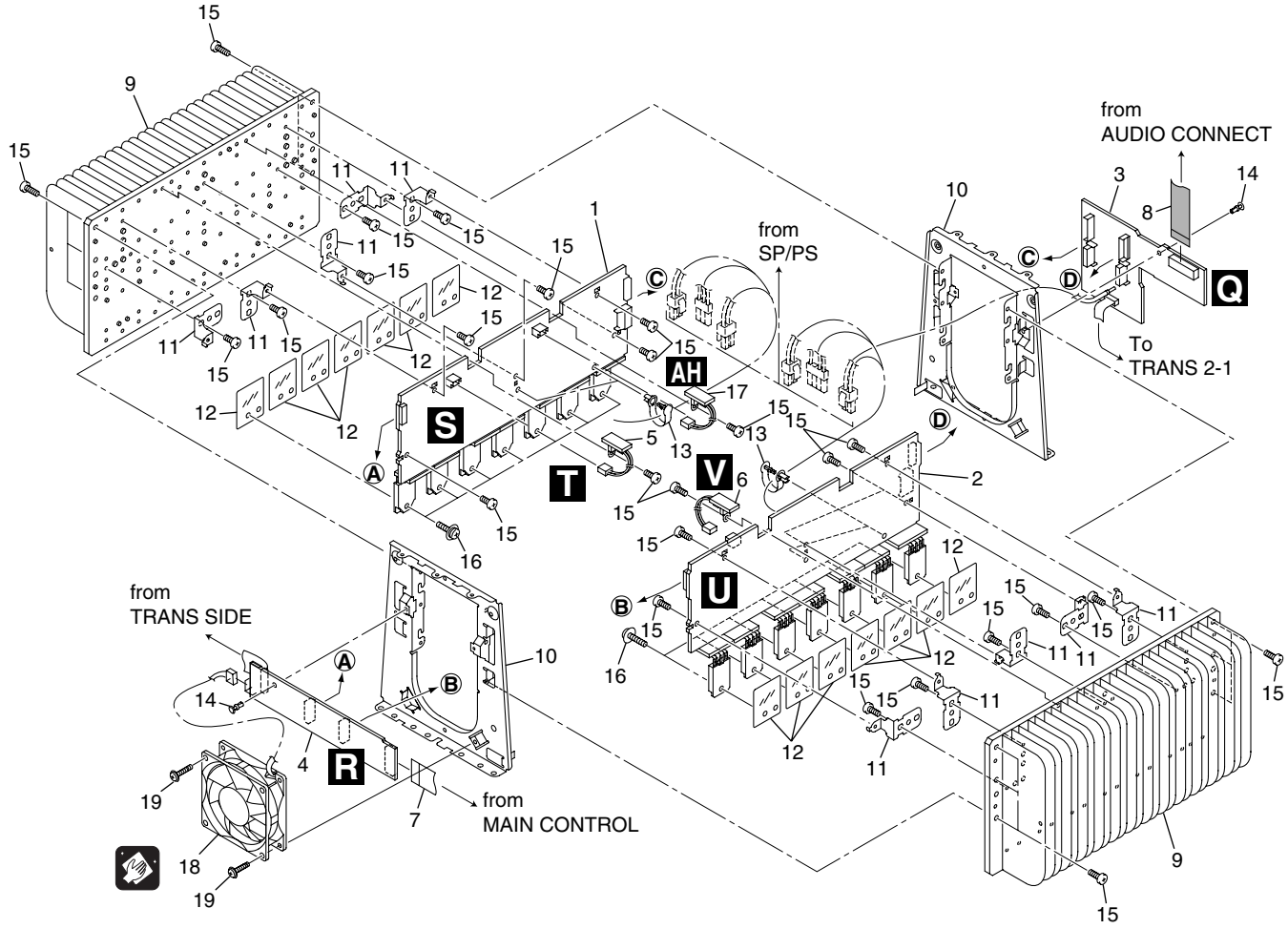

HEAT SINK SECTION parts List

Mark	No.	Description	Part No.
	1	POWER AMP-L Assy	AWX8403
	2	POWER AMP-R Assy	AWX8404
	3	POWER AMP IN Assy	AWX8405
	4	POWER PROTECT Assy	AWX8407
	5	POSI 1 L Assy	AWX8536
	6	POSI 1 R Assy	AWX8539
	7	Flexible Cable (15P)	ADD7473
	8	Flexible Cable (18P)	ADD7479
NSP	9	Heat Sink 45	ANH7152
	10	H.S Angle V1	ANG7481
	11	PCB Angle 45	ANG7406
	12	Mica Sheet 45	AEE7047
NSP	13	Speed Clamp	AEC7445
	14	Nyron Rivet	AEC7408
	15	Screw	BBZ30P100FCC
	16	Screw (3x19)	ABA7085
	17	POSI 2 L Assy	AWX8428
	18	DC Fan Motor	AXM7029
	19	Screw	BBZ30P300FTC

2.6 FRONT PANEL SECTION

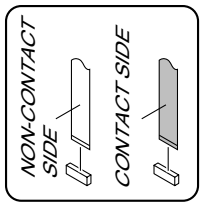

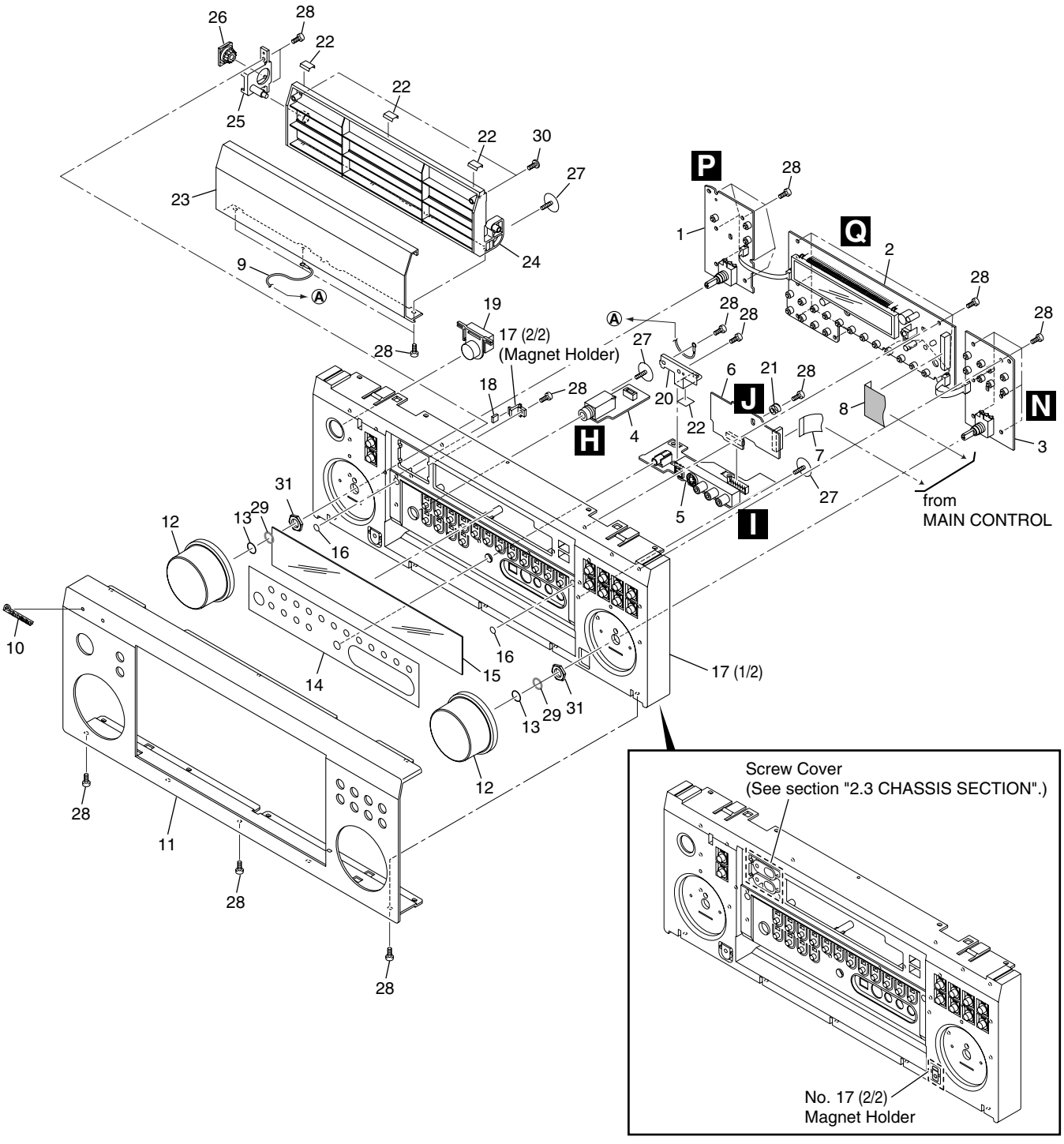

(1) FRONT PANEL SECTION parts List

Mark	No.	Description	Part No.
	1	MULTI JOG Assy	AWX8479
	2	DISPLAY Assy	See Contrast table (2)
	3	VOLUME Assy	AWX8378
	4	HEADPHONE Assy	AWX8380
	5	FRONT-IN Assy	AWX8381
	6	FRONT-IN CONNECT Assy	AWX8416
	7	Flexible Cable (15P)	ADD7473
	8	Flexible Cable (26P)	ADD7474
NSP	9	Earth Lead Wire	ADH7022
	10	Pioneer Badge	See Contrast table (2)
	11	F. Panel	See Contrast table (2)
	12	Rotary Knob	See Contrast table (2)
	13	Ring	ABH7213
	14	D. Sheet	See Contrast table (2)
	15	Window	See Contrast table (2)
	16	Cushion Circle 6	See Contrast table (2)
	17	Panel Base V1	See Contrast table (2)
	18	Magnet 35	AMF7007
	19	Standby Button V1	See Contrast table (2)
	20	Earth Plate A	ANG7484
NSP	21	Earth Spring 35	ABH7193
	22	Cushion 11 x 11	AED7088
	23	Door	See Contrast table (2)
	24	Door Base V1	See Contrast table (2)
	25	Door Shaft 35	AMR7295
	26	Damper Assy (240)	AXA7136
	27	Screw	ABA7110
	28	Screw	BPZ30P100FTC
	29	Knob Spacer V1	AEC7519
	30	• • • •	
	31	Nut	NK90FCC

(2) CONTRAST TABLE

VSX-2014i-S/HYXJ, VSX-1014-K/HYXJ and VSX-1014-S/HYXJ are constructed the same except for the following:

Mark	No.	Symbol and Description	VSX-2014i-S /HYXJ	VSX-1014-K /HYXJ	VSX-1014-S /HYXJ
	2	DISPLAY Assy	AWX8388	AWX8389	AWX8389
	10	Pioneer Badge	VAM1124	AAN7218	VAM1124
	11	F. Panel 2014SY	ANB7340	Not used	Not used
	11	F. Panel 1014BY, SY	Not used	ANB7342	ANB7341
	12	Rotary Knob	AAA7025	AAA7024	AAA7025
	14	D. Sheet 2014SY	AAK8181	Not used	Not used
	14	D. Sheet 1014BY, SY	Not used	AAK8183	AAK8182
	15	Window 2014	AAK8187	Not used	Not used
	15	Window 1014	Not used	AAK8186	AAK8186
	16	Cushion Circle 6	AED7080	AED7083	AED7080
	17	Panel Base V1	AMB7871	AMB7870	AMB7871
	19	Standby Button V1	XAD3191	XAD3173	XAD3191
	23	Door V1S	ANB7336	Not used	ANB7336
	23	Door V1B	Not used	ANB7335	Not used
	24	Door Base V1	AMR7478	AMR7477	AMR7478

3. BLOCK DIAGRAM AND SCHEMATIC DIAGRAM

3.1 BLOCK DIAGRAM

3.1.1 AUDIO SECTION

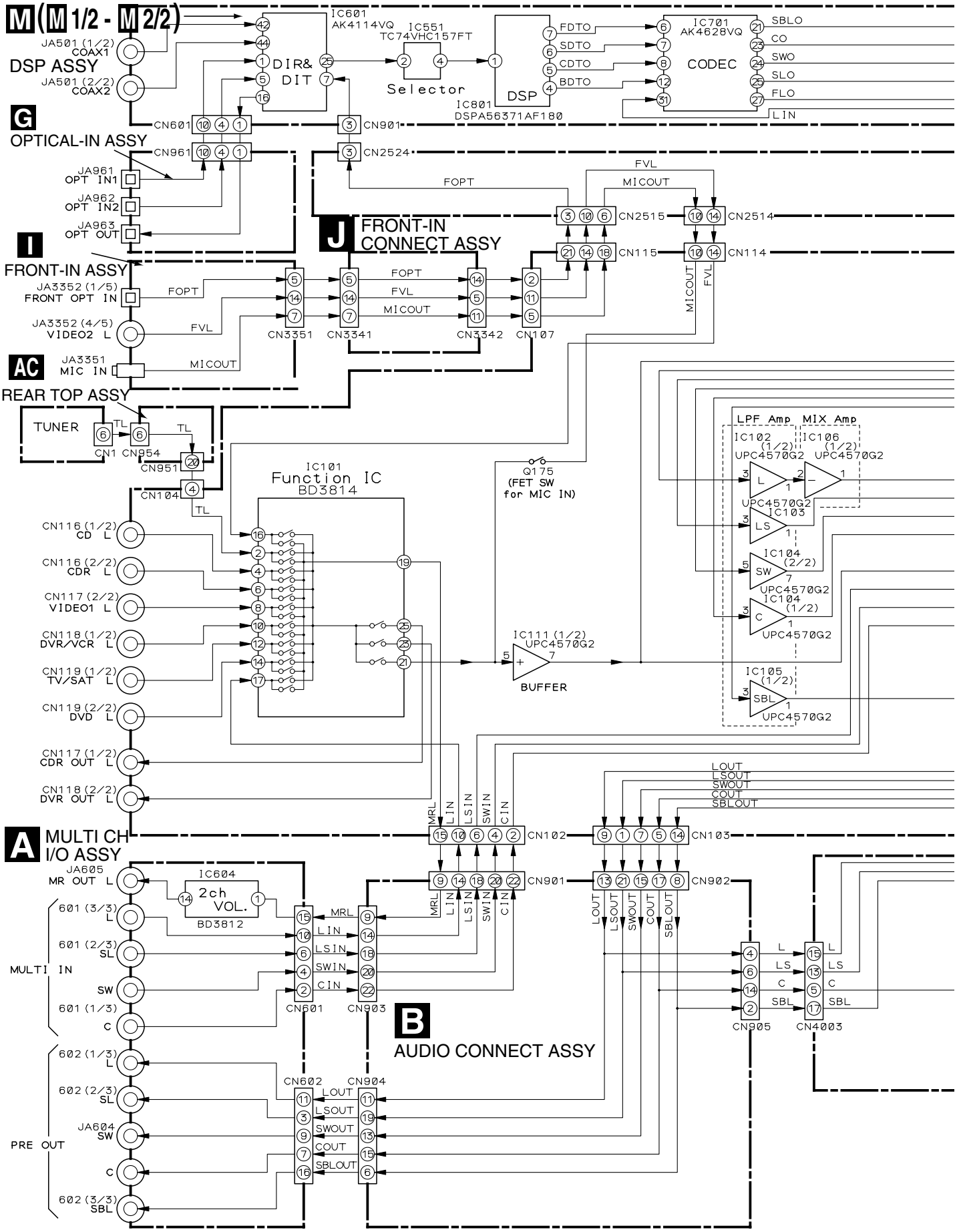

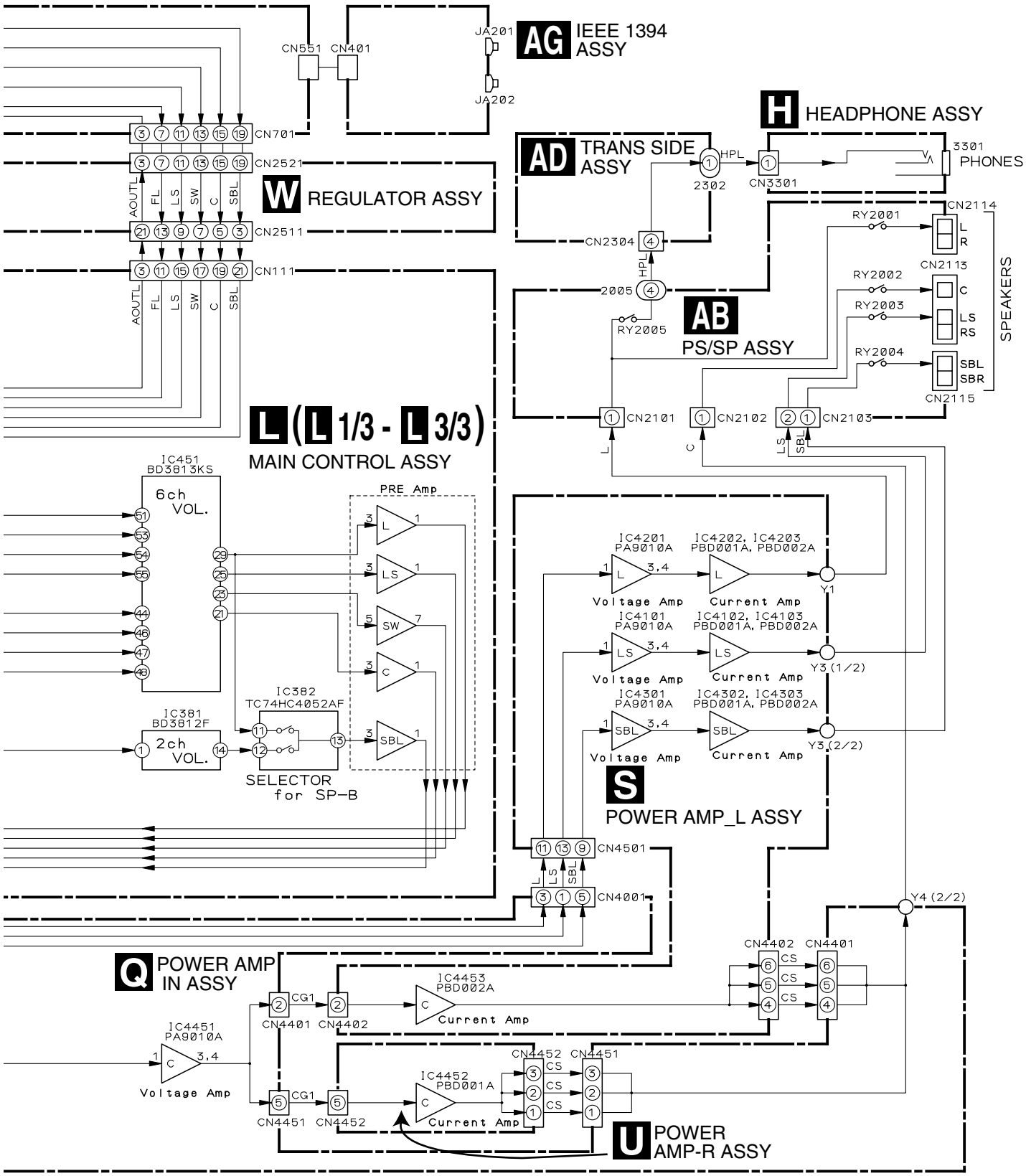
AG IEEE 1394 ASSY
JA201
JA202
CN551
CN401
H HEADPHONE ASSY
AD TRANS SIDE ASSY
HPL
2302
CN3301
3301
PHONES
CN701
CN2521
CN2511
CN111
W REGULATOR ASSY
AOUT L
FL
LS
SW
C
SBL
CN2304
2005
RY2005
AB PS/SP ASSY
CN2114
RY2001
L
R
CN2113
RY2002
C
RY2003
LS
RS
RY2004
SBL
SBR
CN2115
SPEAKERS
CN2101
CN2102
CN2103
L (L 1/3 - L 3/3)
MAIN CONTROL ASSY
IC451
BD3813KS
6ch
VOL.
PRE Amp
IC381
BD3812F
2ch
VOL.
IC382
TC74HC4052AF
SELECTOR
for SP-B
IC4201
PA9010A
IC4202, IC4203
PBD001A, PBD002A
Voltage Amp
Current Amp
Y1
IC4101
PA9010A
IC4102, IC4103
PBD001A, PBD002A
Y3 (1/2)
IC4301
PA9010A
IC4302, IC4303
PBD001A, PBD002A
Y3 (2/2)
S POWER AMP_L ASSY
CN4501
CN4001
Y4 (2/2)
Q POWER AMP IN ASSY
CG1
CN4401
CN4402
IC4453
PBD002A
IC4451
PA9010A
CN4452
CN4451
IC4452
PBD001A
CS
U POWER AMP-R ASSY

3.1.2 VIDEO and DISPLAY SECTIONS

Video Block

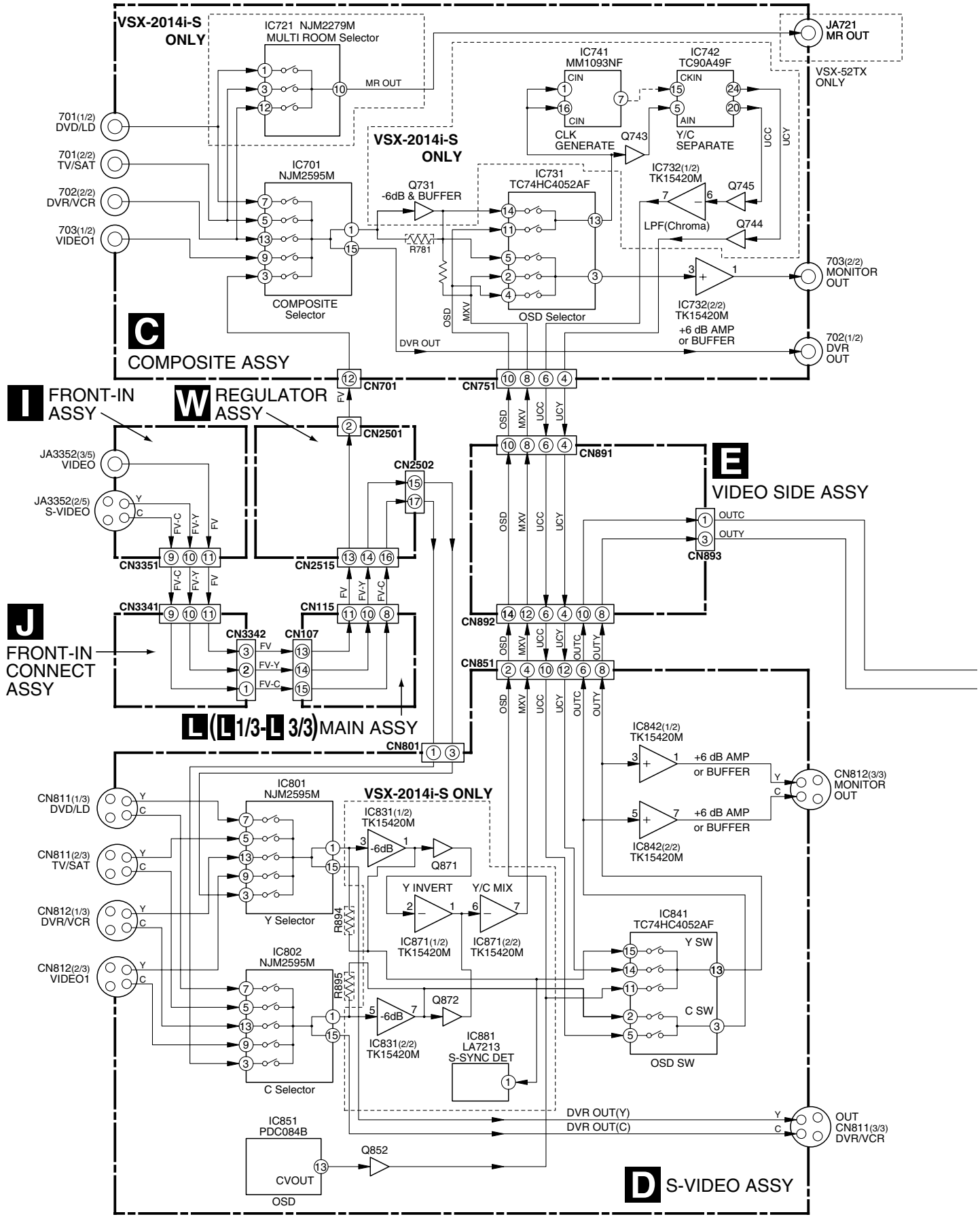

Display/SR Block

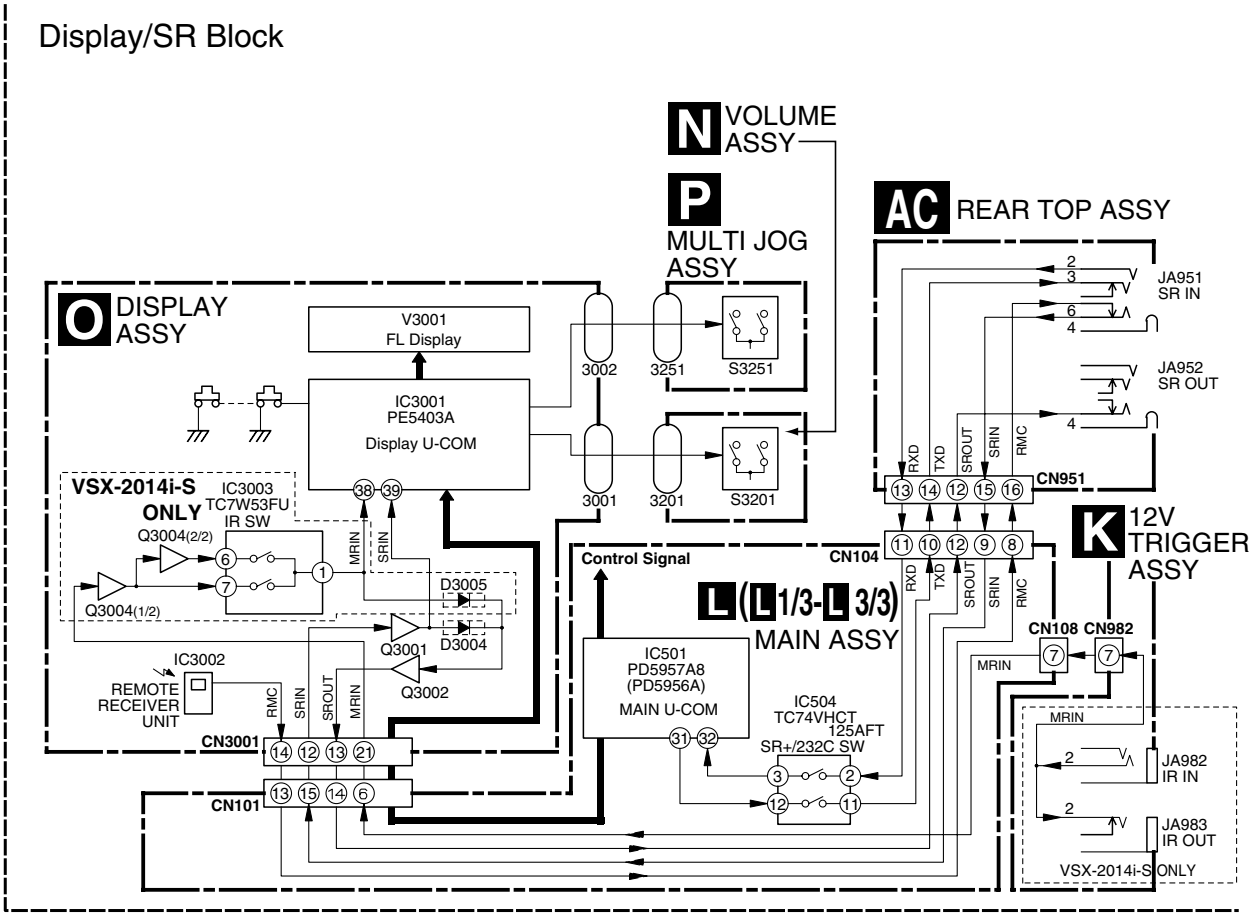

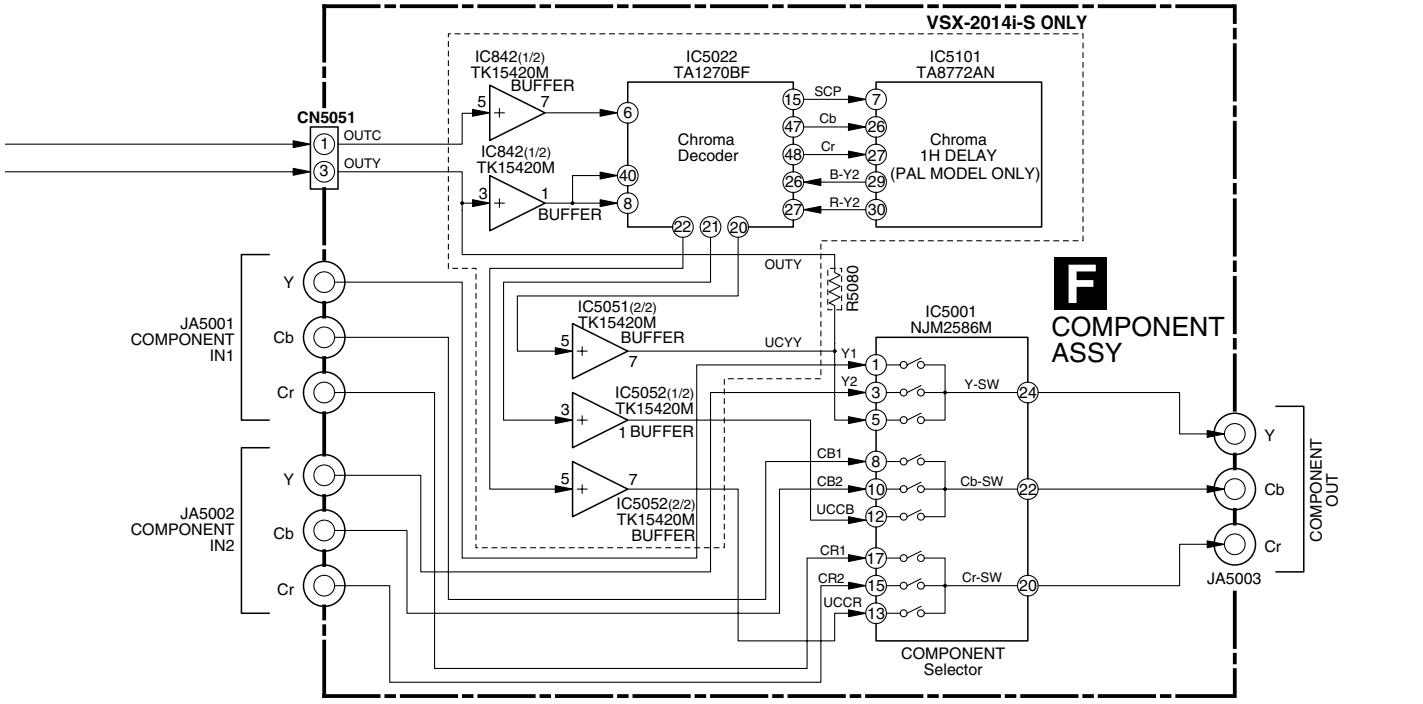

3.1.3 DSP and 1394 SECTIONS

A

DSP Block

M (M 1/2 - M 2/2) DSP ASSY

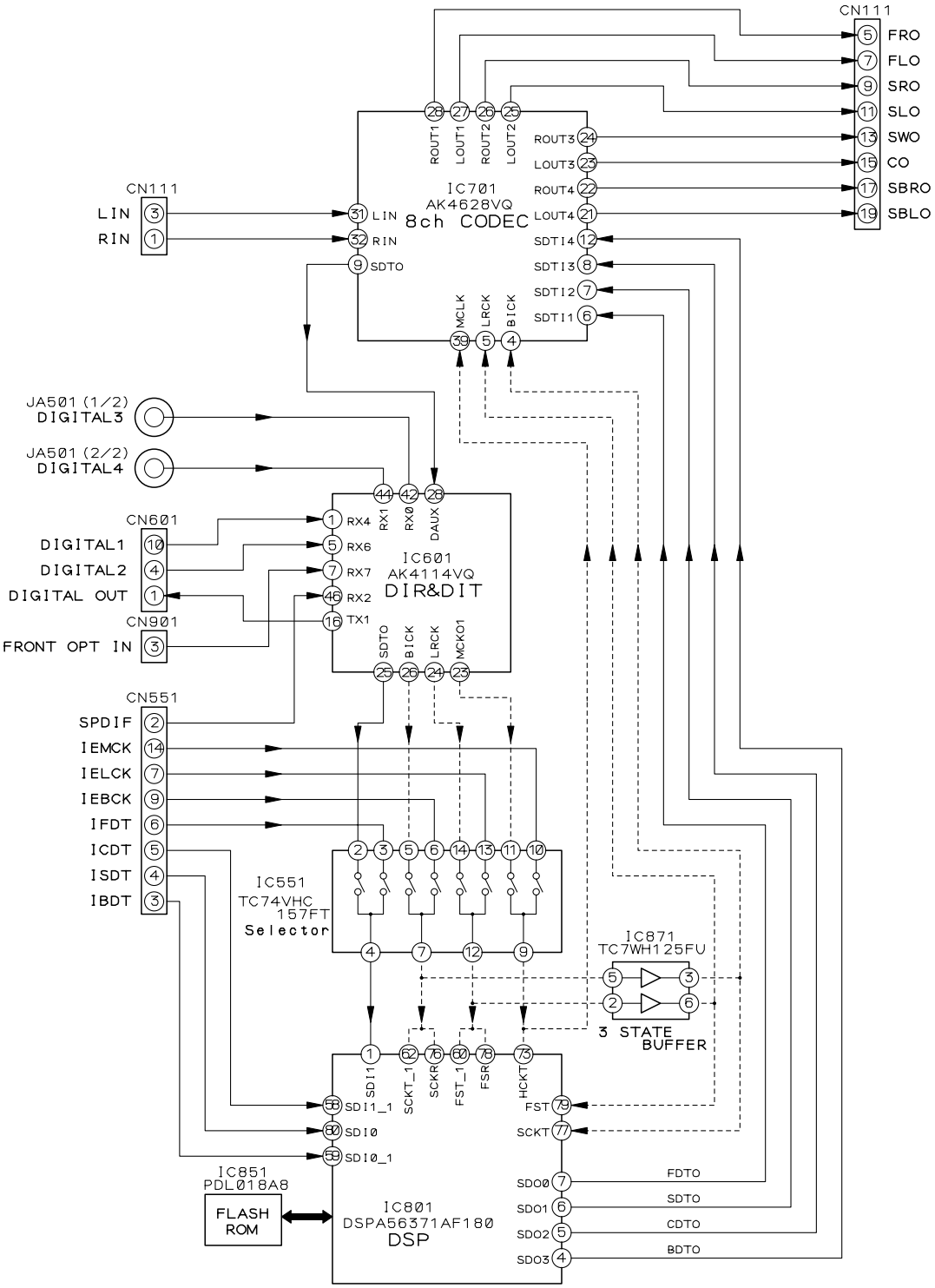

AG 1394 Block Diagram (VSX-2014i-S Only)

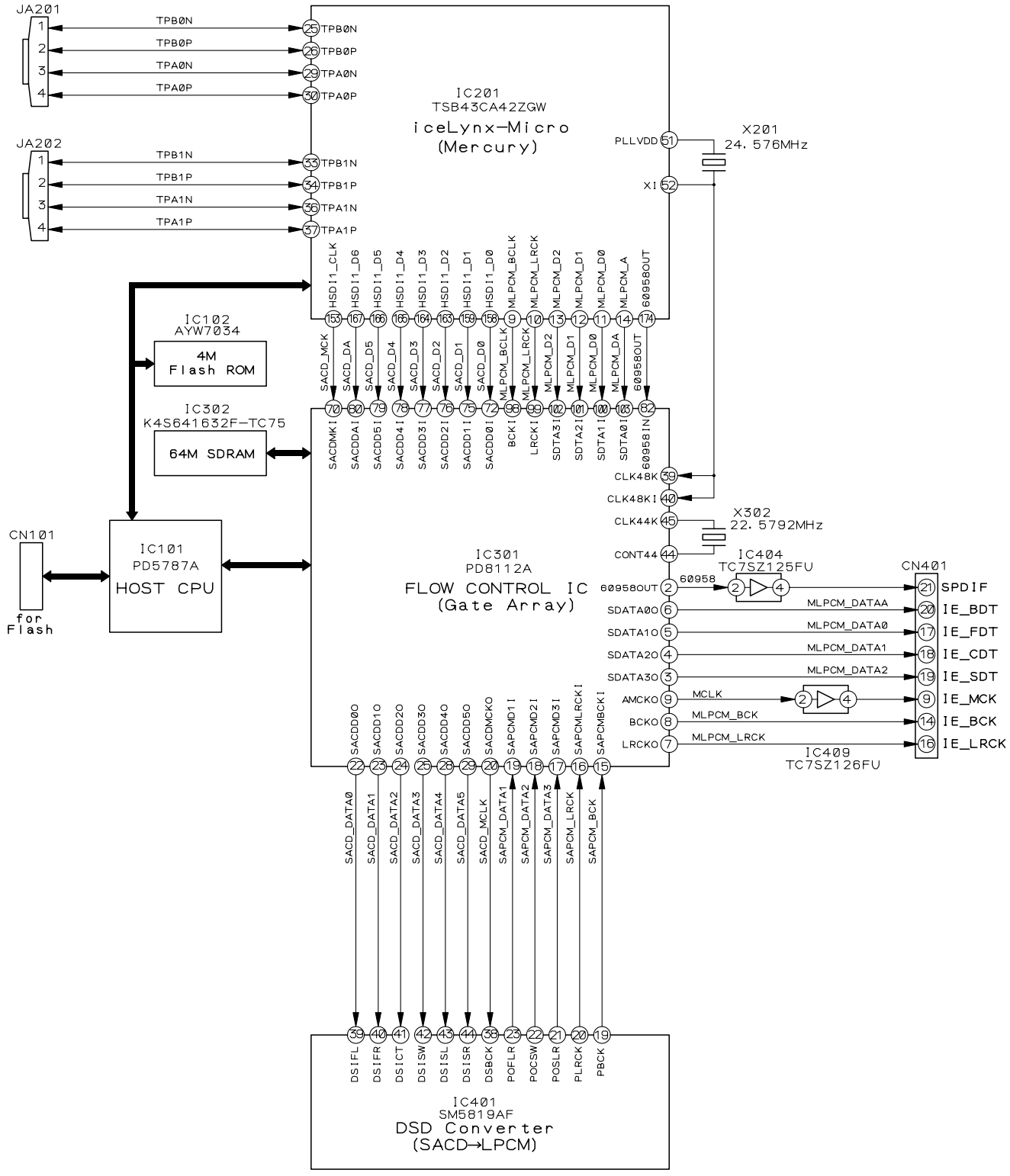

3.1.4 POWER SUPPLY SECTION

Power Supply Block

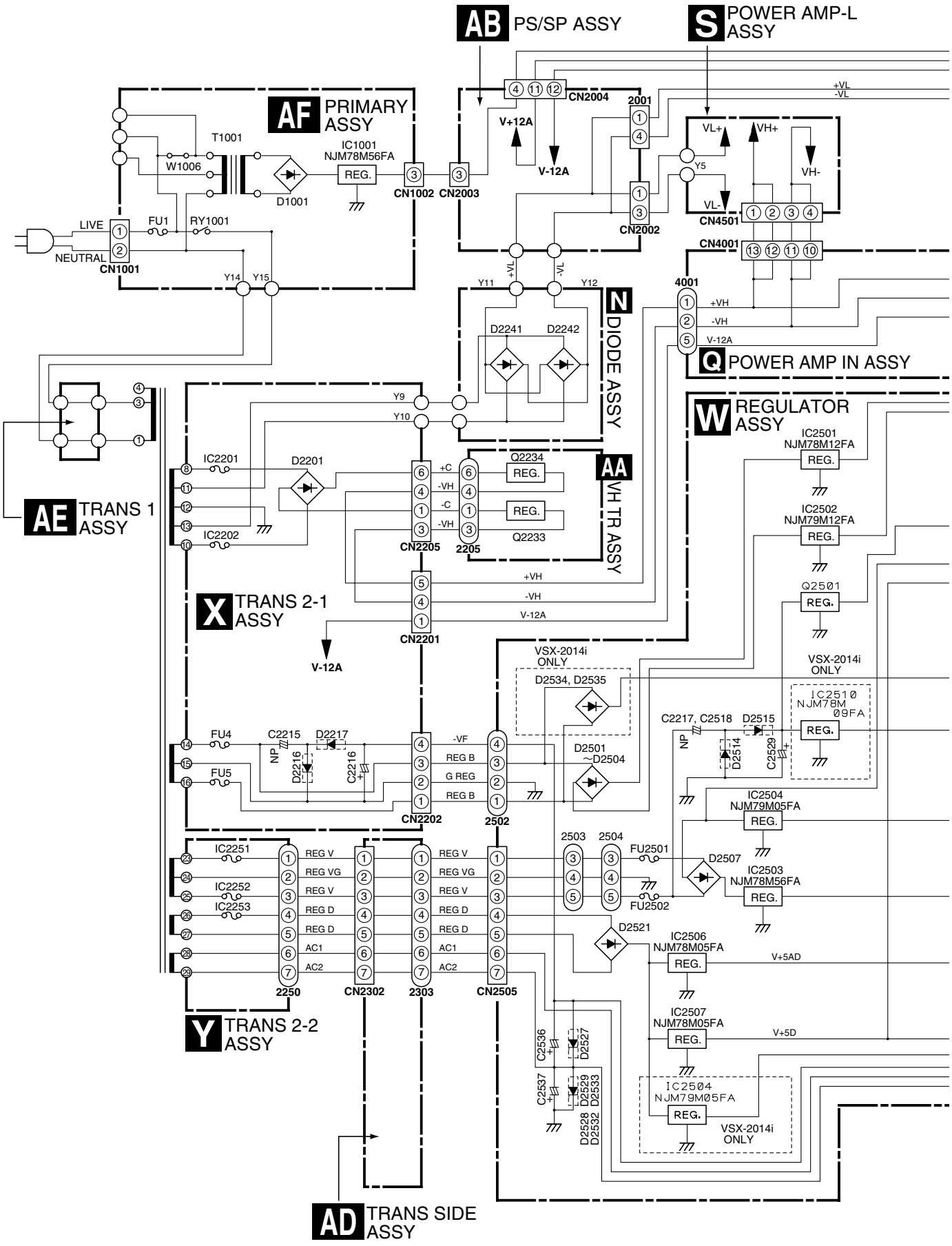

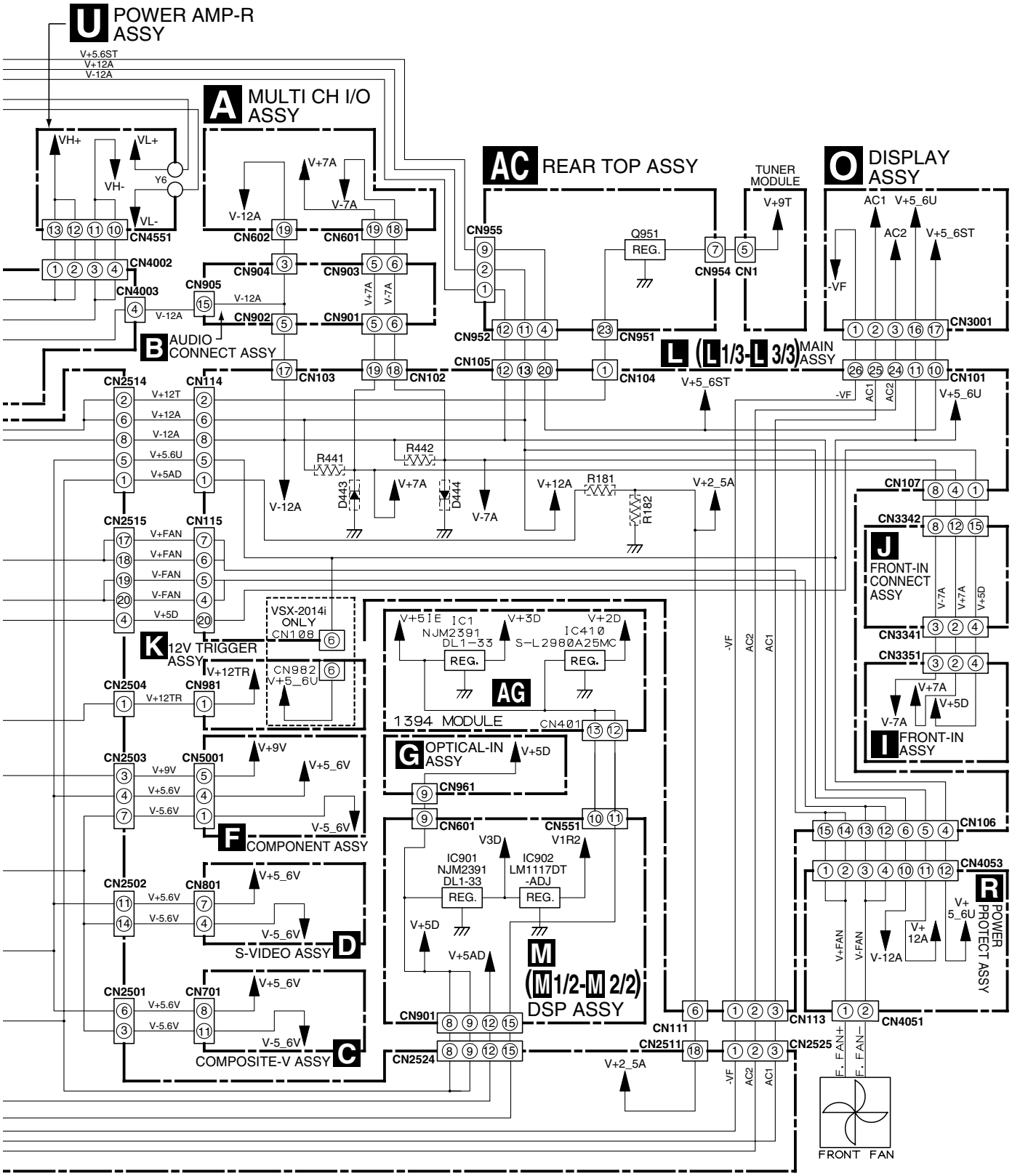
U POWER AMP-R ASSY
V+5.6ST
V+12A
V-12A
A MULTI CH I/O ASSY
VH+
VL+
VH-
Y6
VL-
CN4551
CN4002
CN4003
CN905
CN602
CN601
CN904
CN903
CN902
CN901
V+7A
V-7A
V-12A
B AUDIO CONNECT ASSY
AC REAR TOP ASSY
CN955
CN954
CN1
Q951
REG.
TUNER MODULE
V+9T
O DISPLAY ASSY
AC1
AC2
V+5_6U
V+5_6ST
-VF
CN3001
CN952
CN951
CN105
CN103
CN102
CN104
L (L1/3-L3/3) MAIN ASSY
CN101
CN2514
CN114
V+12T
V+5.6U
V+5AD
R441
R442
D443
D444
R181
R182
V+2_5A
CN107
CN3342
J FRONT-IN CONNECT ASSY
CN3341
CN3351
I FRONT-IN ASSY
CN2515
CN115
V+FAN
V-FAN
V+5D
K 12V TRIGGER ASSY
VSX-2014i ONLY
CN108
CN982
V+12TR
CN2504
CN981
AG
IC1 NJM2391 DL1-33
IC410 S-L2980A25MC
V+5IE
V+3D
V+2D
1394 MODULE
CN401
G OPTICAL-IN ASSY
CN961
CN2503
CN5001
V+9V
V+5.6V
V-5.6V
V+5_6V
V-5_6V
F COMPONENT ASSY
CN601
CN551
CN106
V3D
V1R2
IC901 NJM2391 DL1-33
IC902 LM1117DT -ADJ
CN2502
CN801
CN4053
R POWER PROTECT ASSY
V+12A
D S-VIDEO ASSY
M (M1/2-M2/2) DSP ASSY
CN2501
CN701
C COMPOSITE-V ASSY
CN901
CN2524
CN111
CN2511
CN113
CN2525
CN4051
F. FAN+
F. FAN-
FRONT FAN

3.2 OVERALL WIRING DIAGRAM

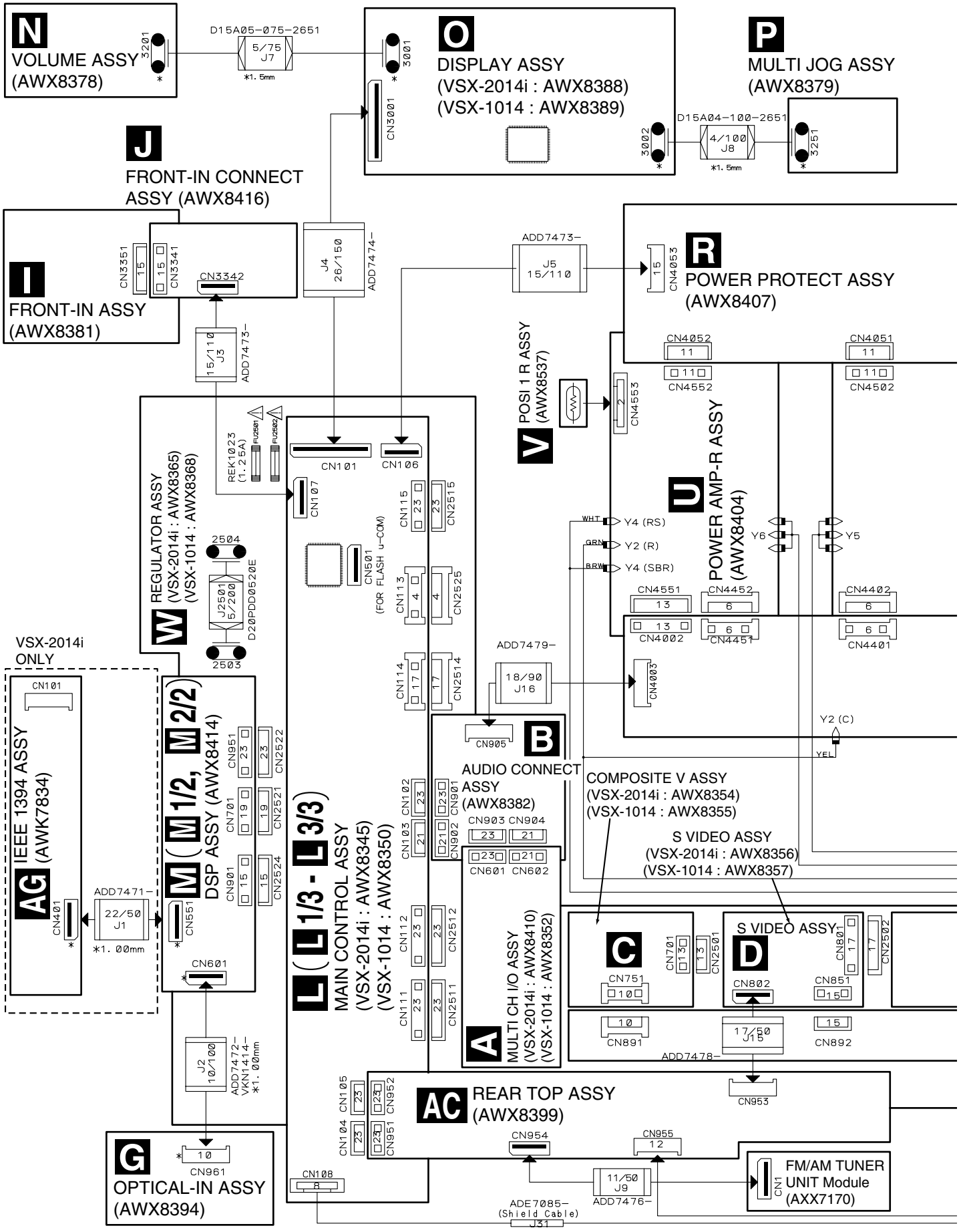

- When ordering service parts, be sure to refer to "EXPLODED VIEWS and PARTS LIST" or "PCB PARTS LIST".
- The ⚠ mark found on some component parts indicates the importance of the safety factor of the part. Therefore, when replacing, be sure to use parts of identical designation.
- : The power supply is shown with the marked box.

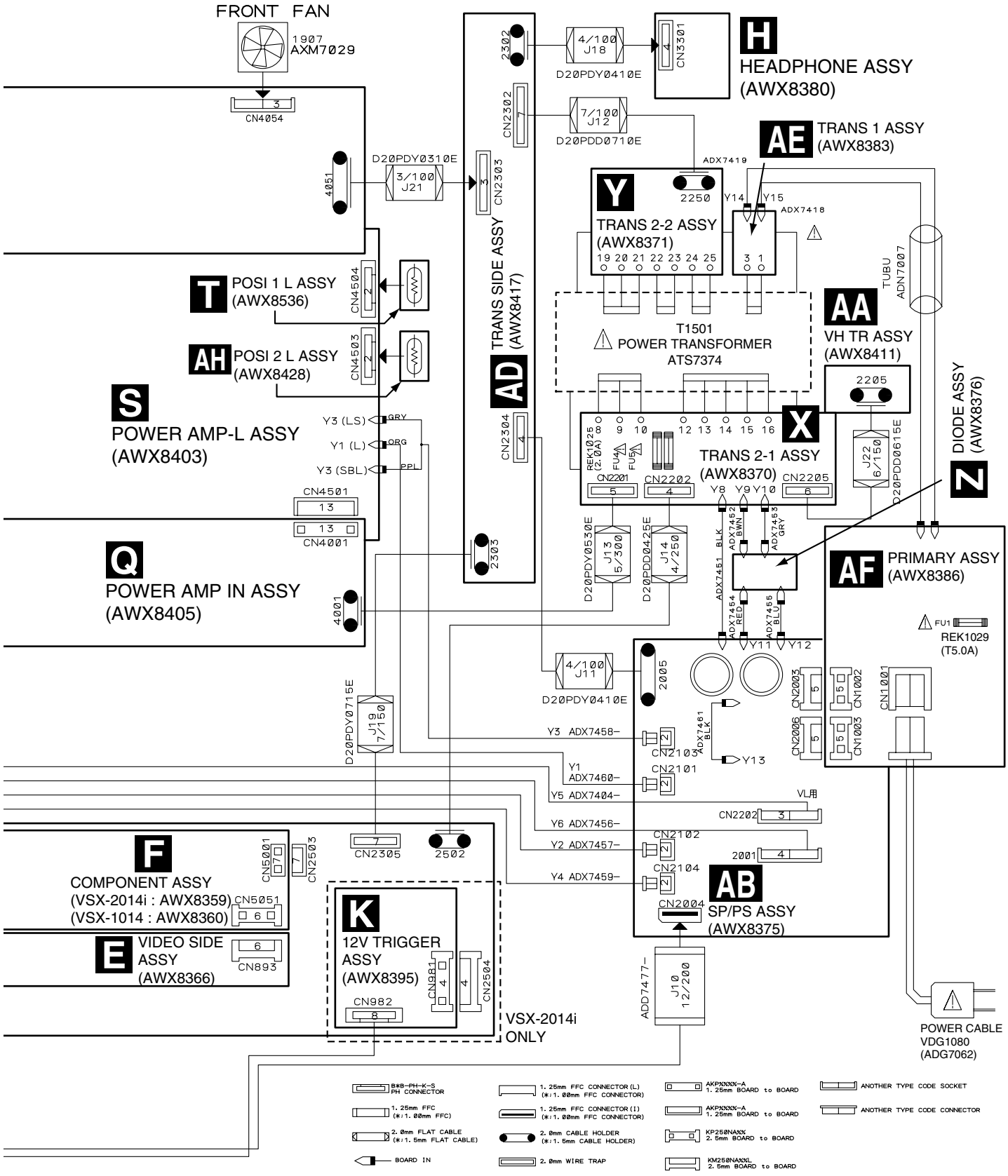

3.3 MULTI CH I/O and AUDIO CONNECT ASSYS

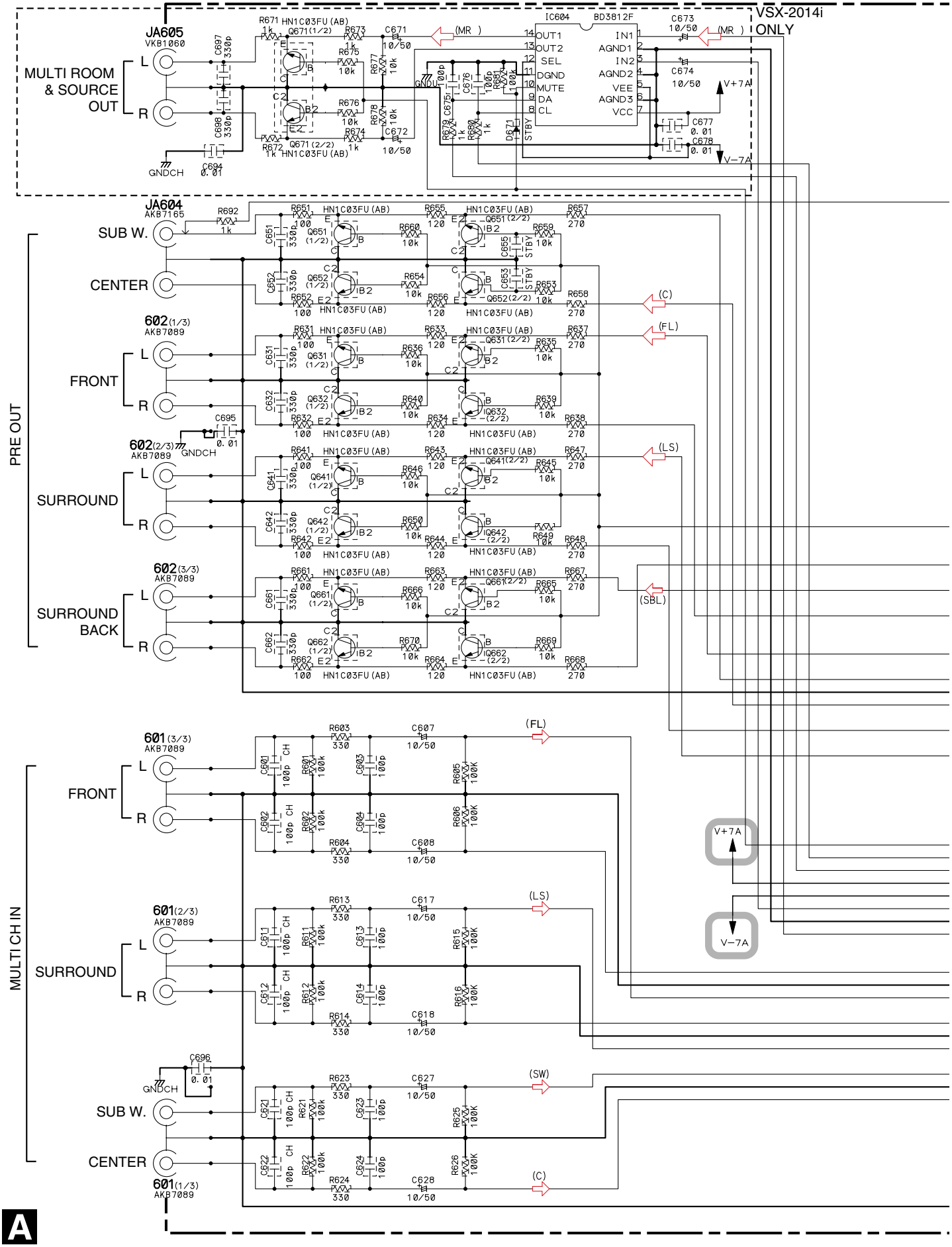

A MULTI CH I/O ASSY
(VSX-2014i : AWX8410)
(VSX-1014 : AWX8352)

B AUDIO CONNECT ASSY (AWX8382)

Q CN4003

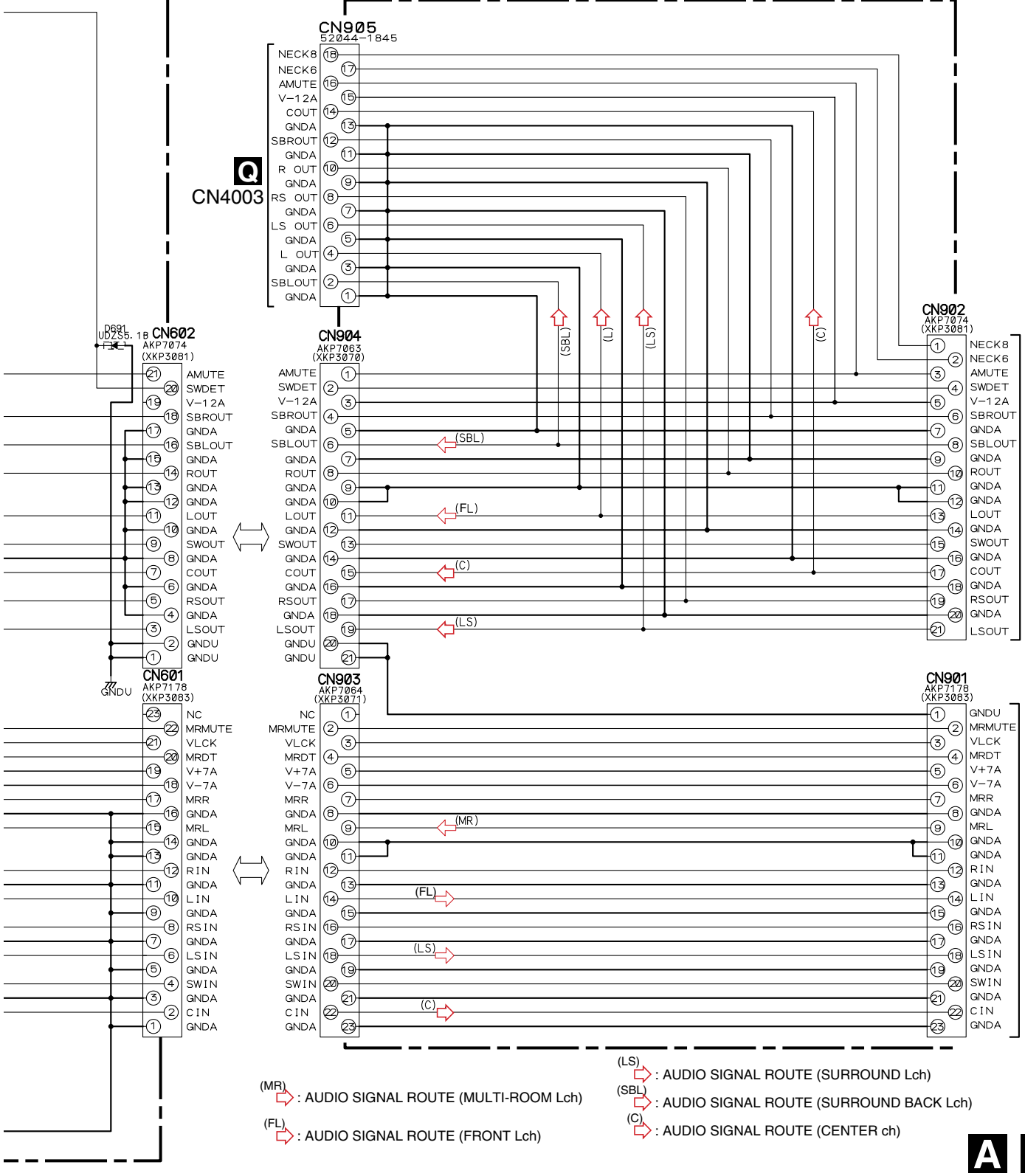

(MR) : AUDIO SIGNAL ROUTE (MULTI-ROOM Lch)

(FL) : AUDIO SIGNAL ROUTE (FRONT Lch)

(LS) : AUDIO SIGNAL ROUTE (SURROUND Lch)

(SBL) : AUDIO SIGNAL ROUTE (SURROUND BACK Lch)

(C) : AUDIO SIGNAL ROUTE (CENTER ch)

A **B**

3.4 COMPOSITE V ASSY

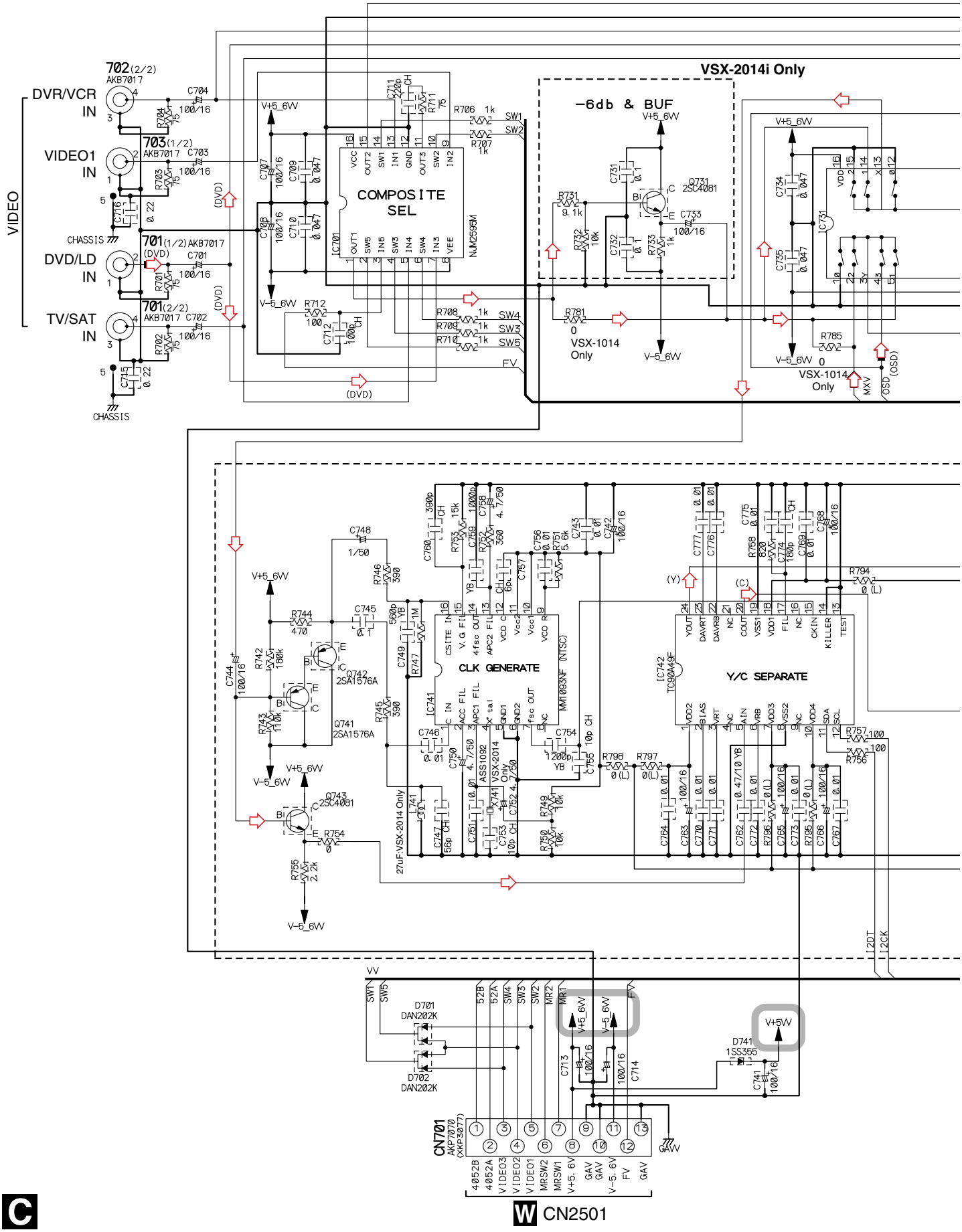

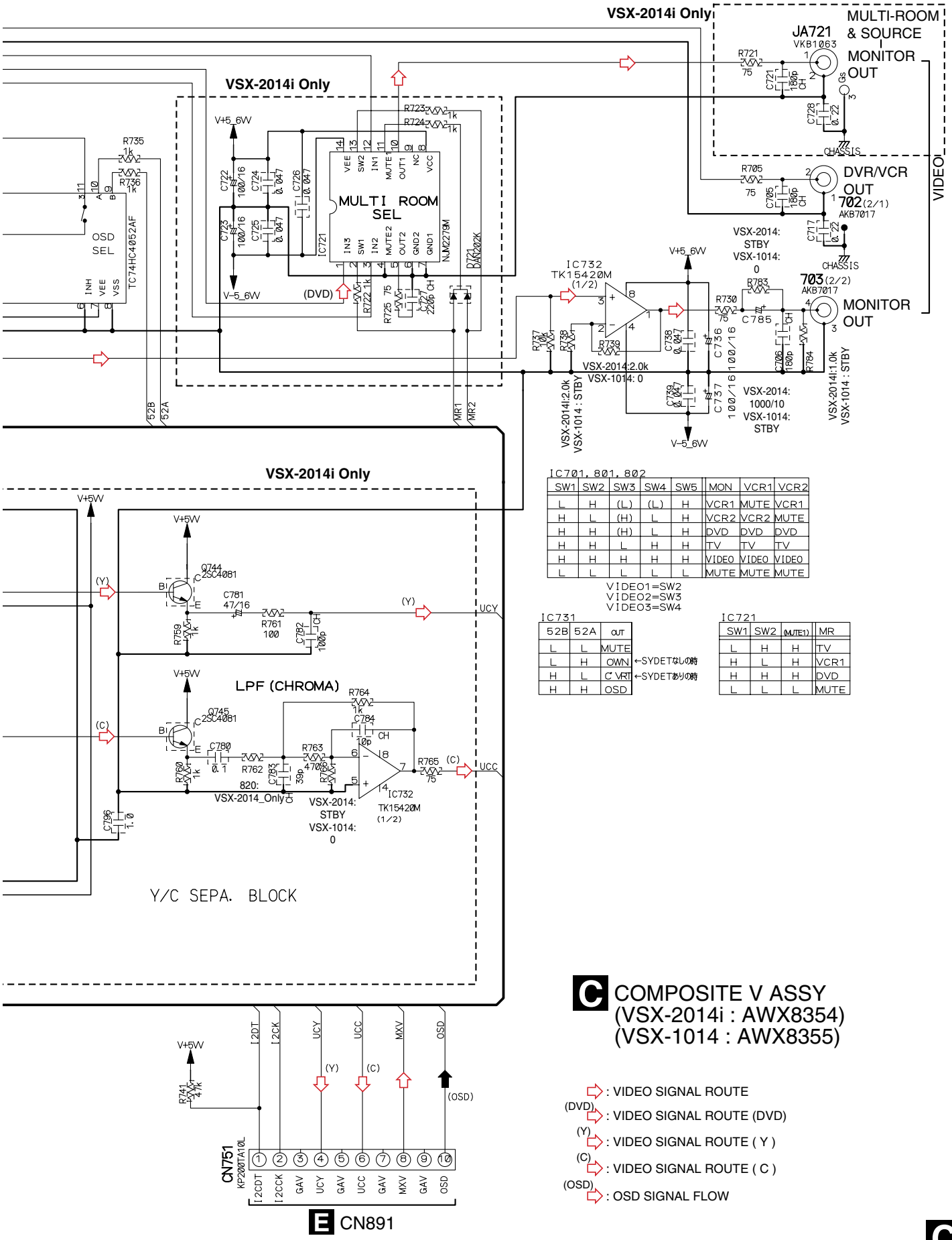

C COMPOSITE V ASSY (VSX-2014i : AWX8354) (VSX-1014 : AWX8355)

: VIDEO SIGNAL ROUTE

(DVD) : VIDEO SIGNAL ROUTE (DVD)

(Y) : VIDEO SIGNAL ROUTE (Y)

(C) : VIDEO SIGNAL ROUTE (C)

(OSD) : OSD SIGNAL FLOW

3.5 S VIDEO and VIDEO SIDE ASSYS

D S VIDEO ASSY (VSX-2014i : AWX8356), (VSX-1014 : AWX8357)

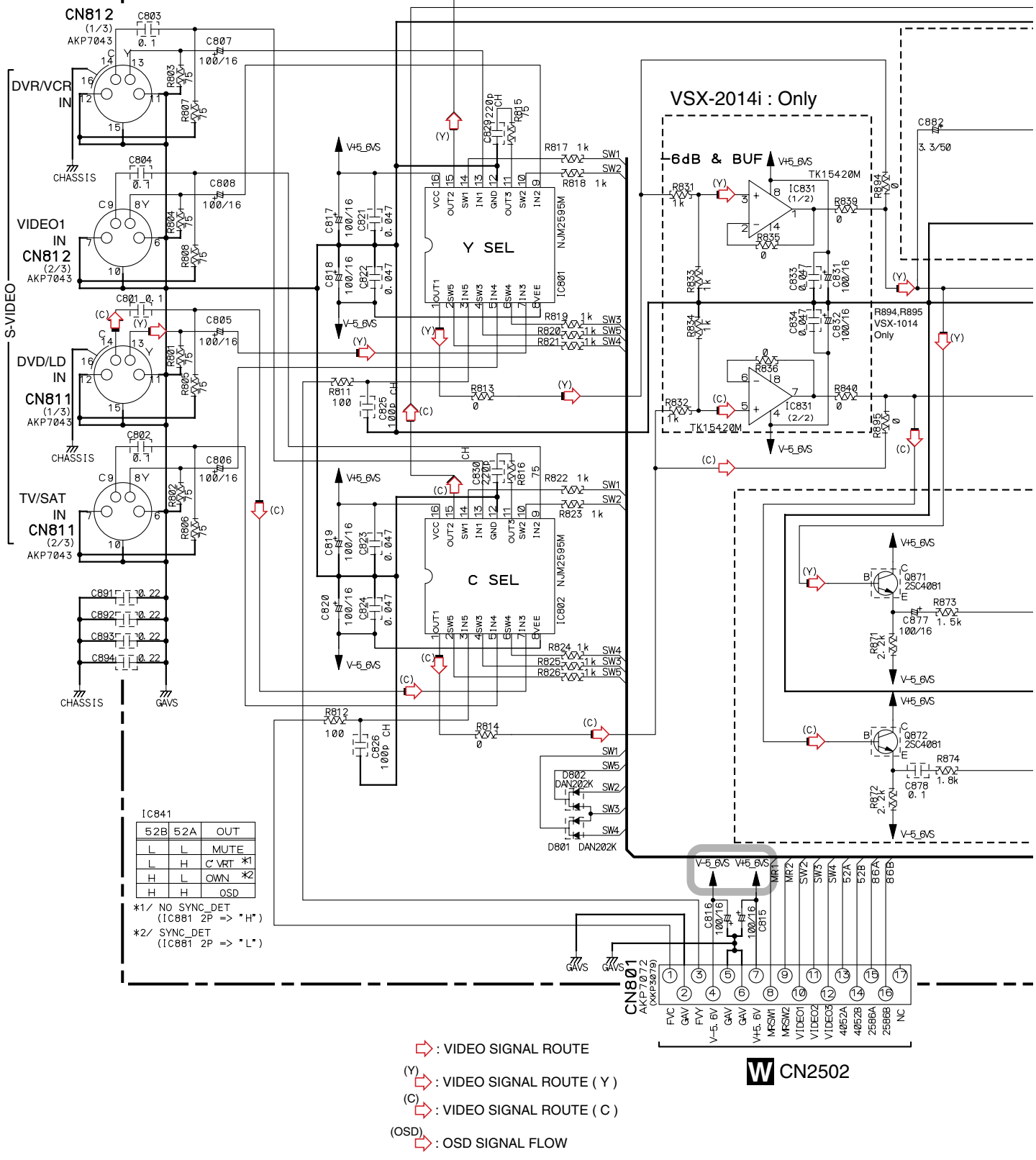

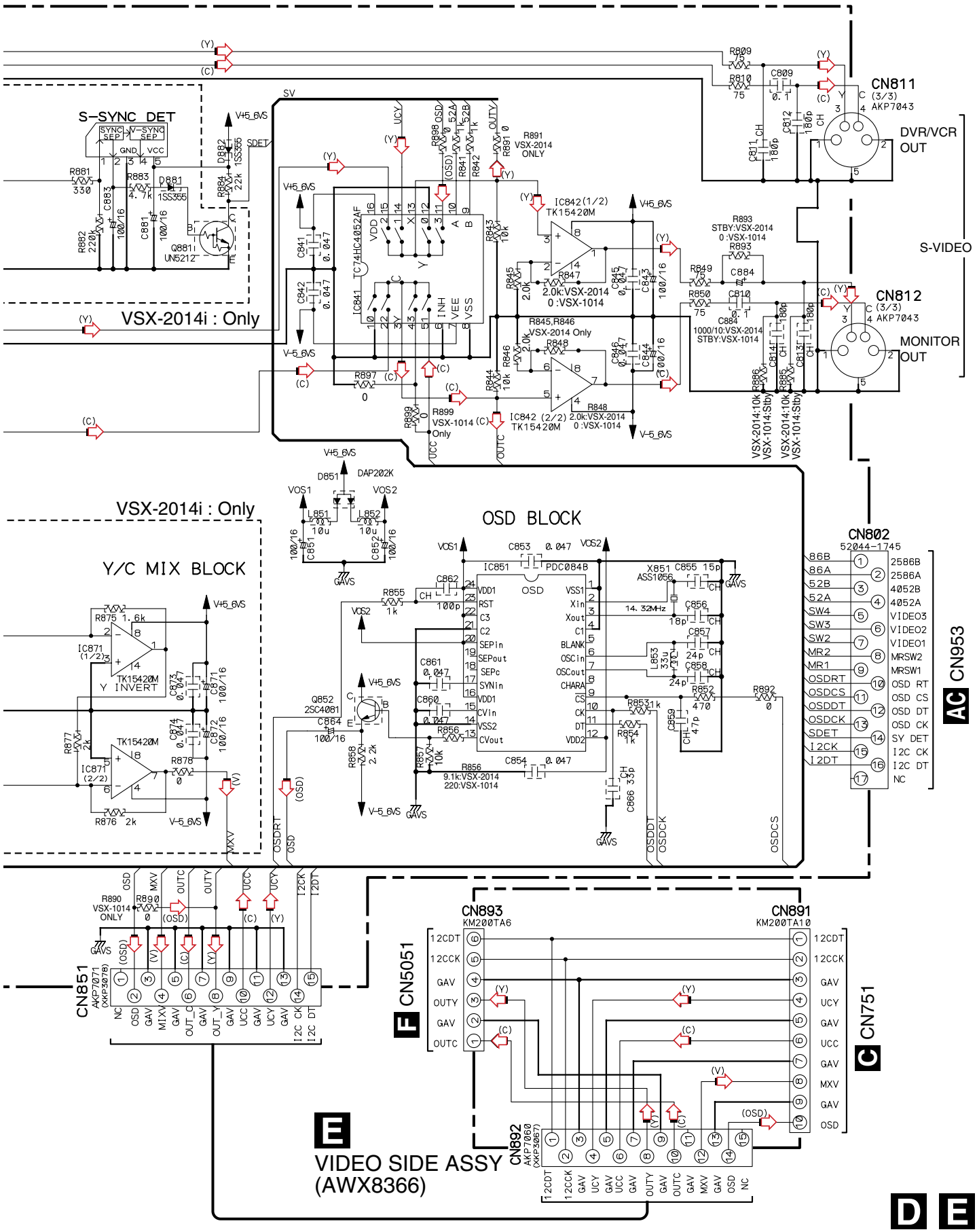
S-SYNC DET
VSX-2014i : Only
Y/C MIX BLOCK
OSD BLOCK
CN811
DVR/VCR OUT
S-VIDEO
CN812
MONITOR OUT
CN802
CN953
CN851
CN5051
CN893
CN891
CN751
CN892
VIDEO SIDE ASSY
(AWX8366)
VSX-2014i-S
33

3.6 COMPONENT ASSY

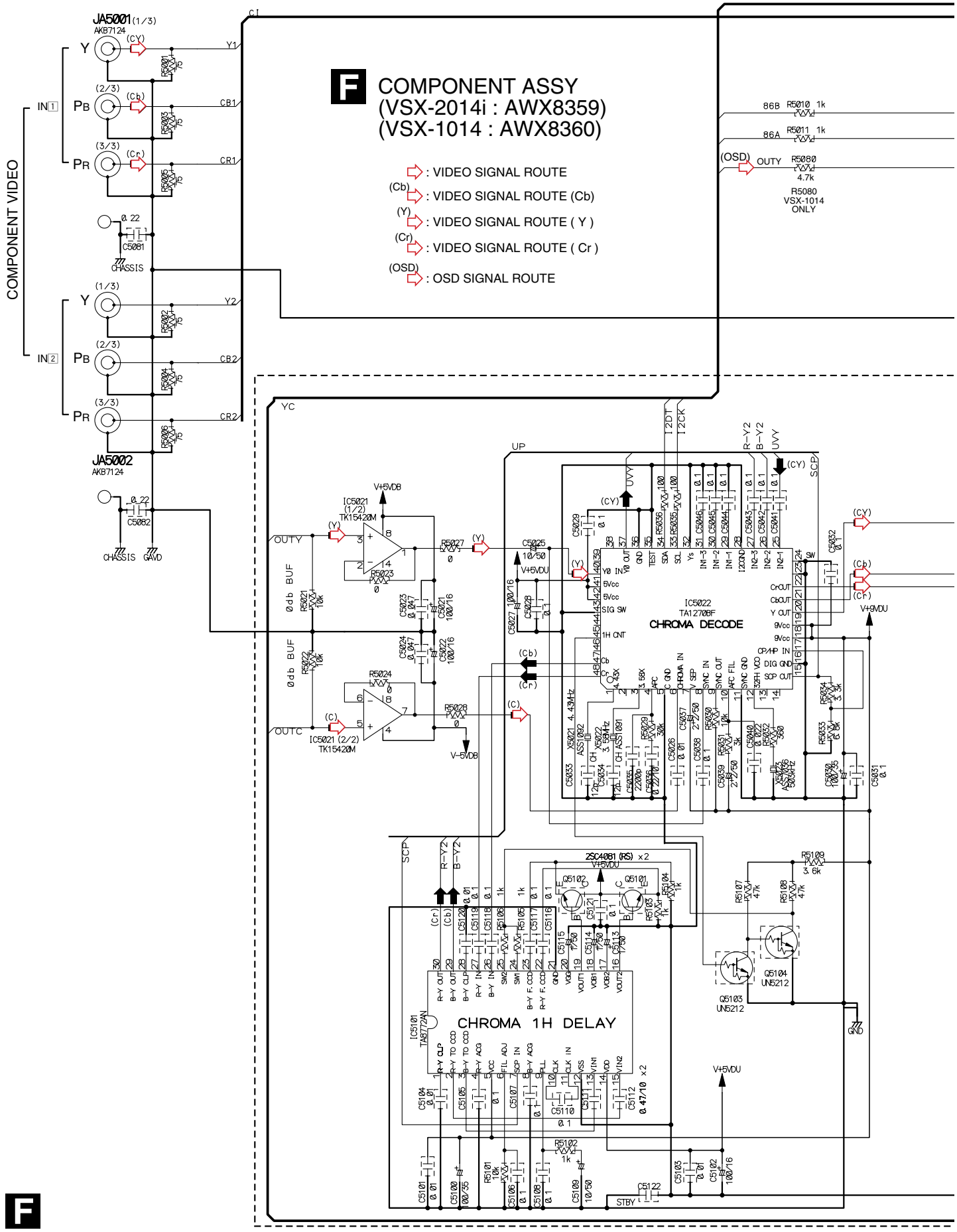

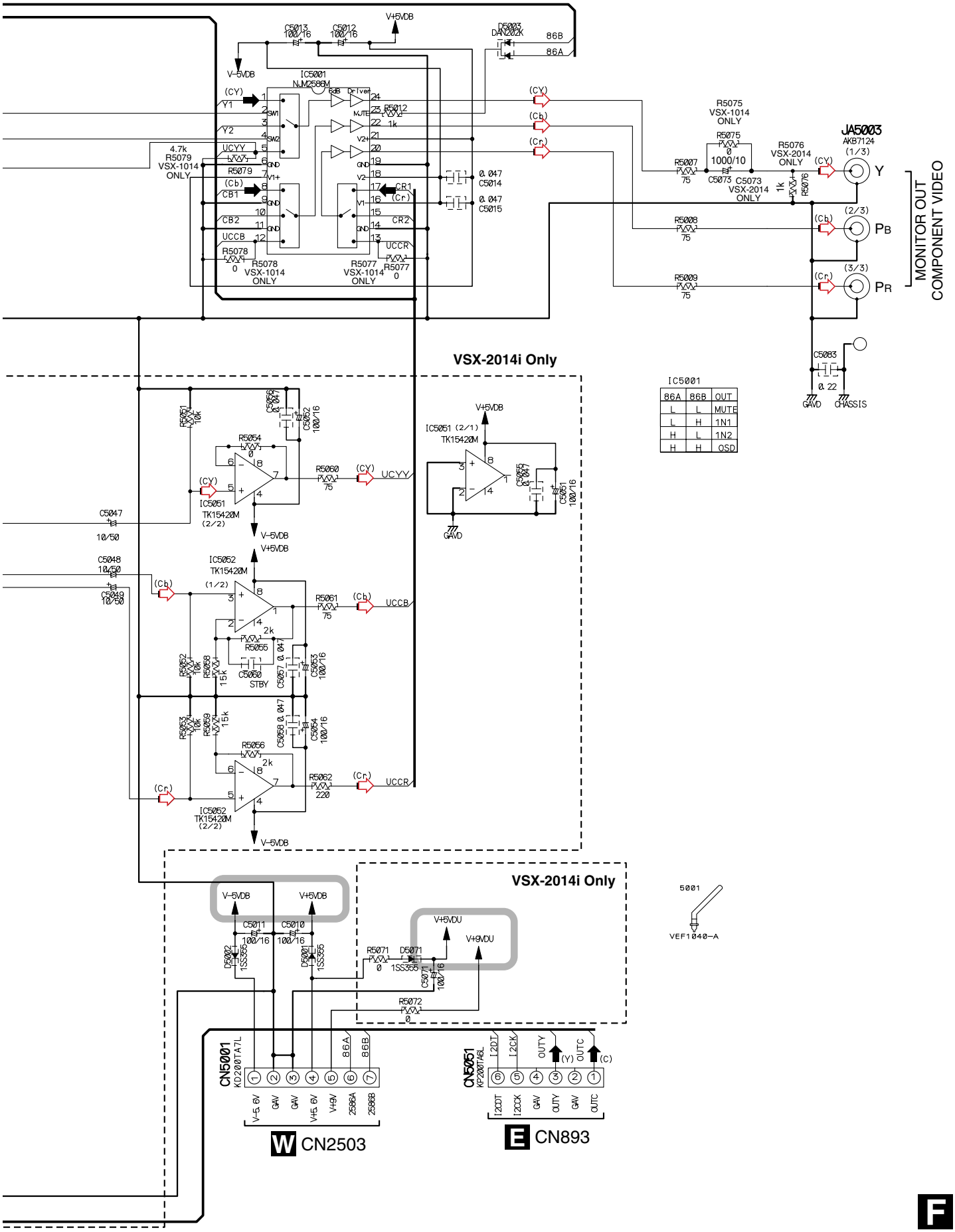
VSX-2014i Only
VSX-2014i Only
MONITOR OUT
COMPONENT VIDEO
JA5003
AKB7124
Y
PB
PR
IC5001
86A 86B OUT
L L MUTE
L H 1N1
H L 1N2
H H OSD
CN5001
KO200TA7L
CN5051
KP200TA6L
W CN2503
E CN893
5001
VEF1040-A

3.7 OPTICAL-IN,H.P,FRONT-IN,FRONT-IN CONNECT and 12VTRIG. ASSYS

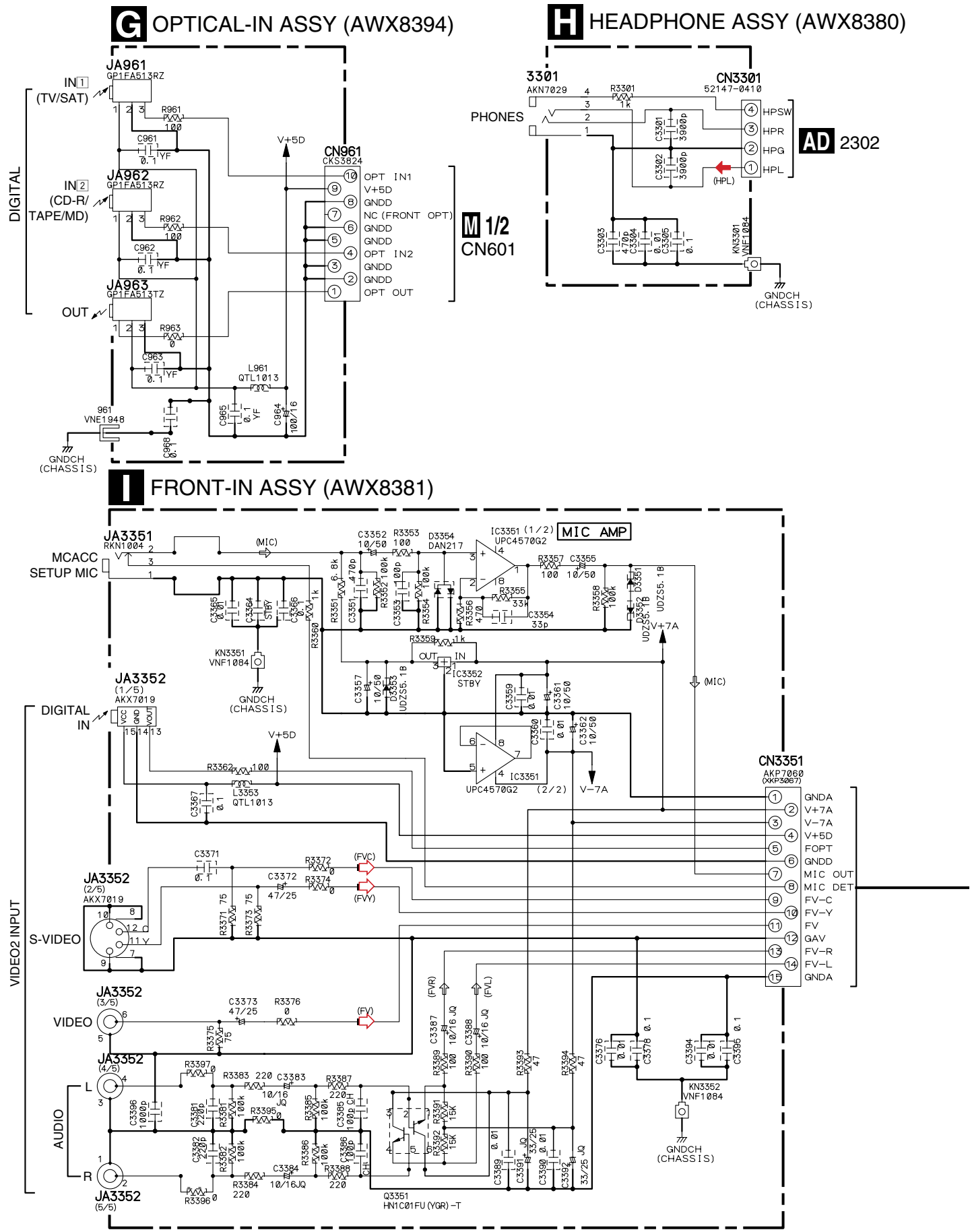

G H I

K 12V TRIGGER ASSY (AWX8395)

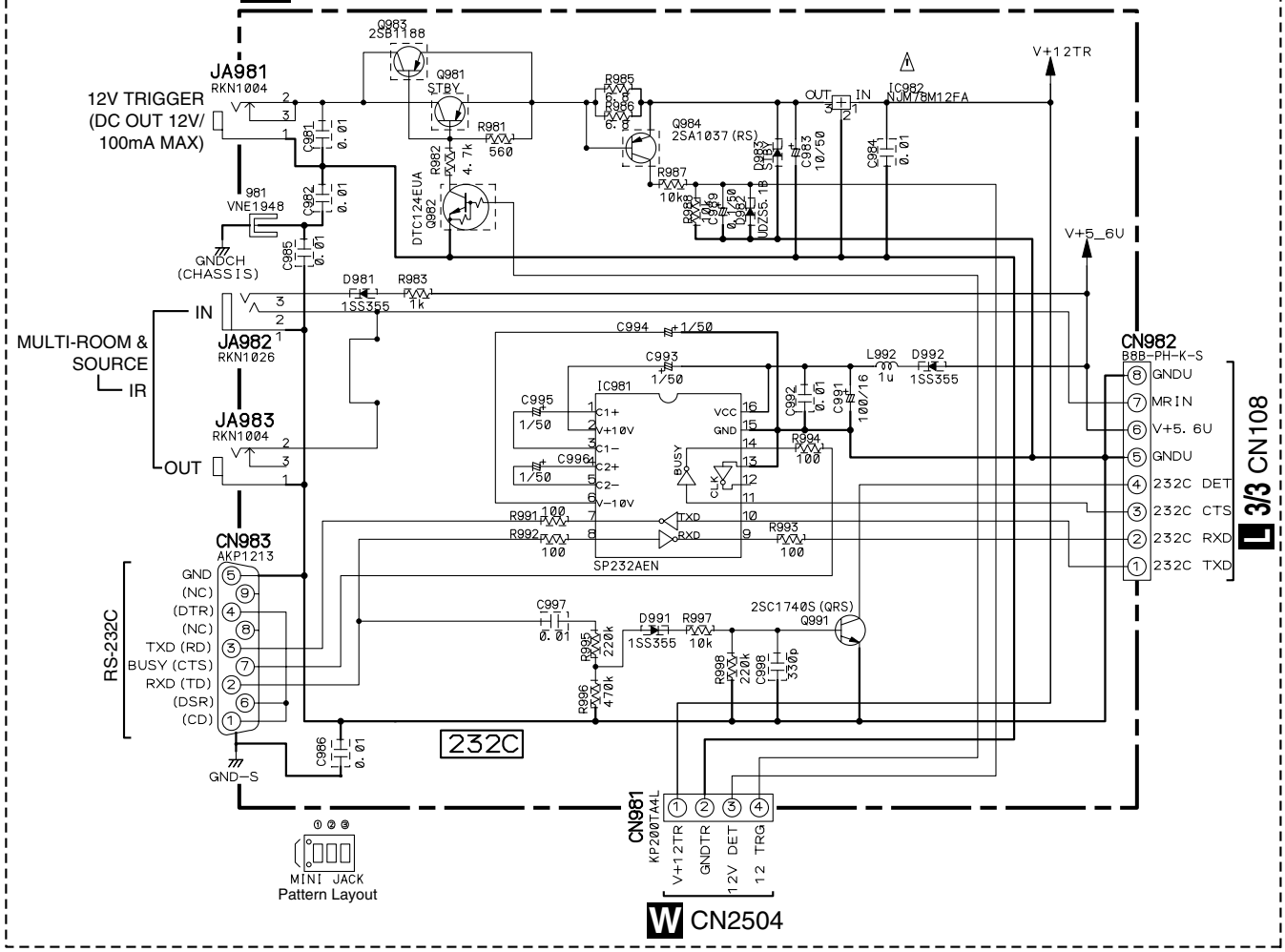

VSX-2014i ONLY

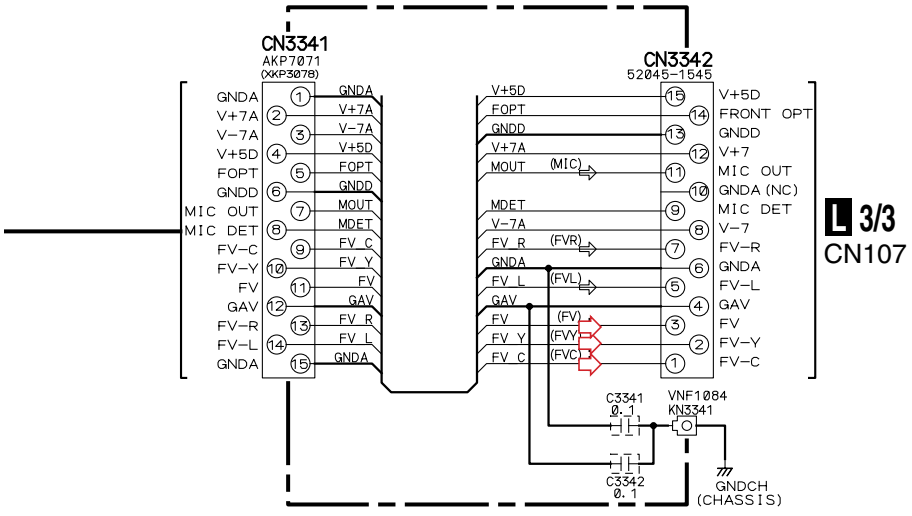

J FRONT-IN CONNECT ASSY (AWX8416)

: AUDIO SIGNAL ROUTE
: VIDEO SIGNAL ROUTE
(V) : VIDEO SIGNAL ROUTE (V)
(Y) : VIDEO SIGNAL ROUTE (Y)
(C) : VIDEO SIGNAL ROUTE (C)

3.8 MAIN CONTROL ASSY (1/3)

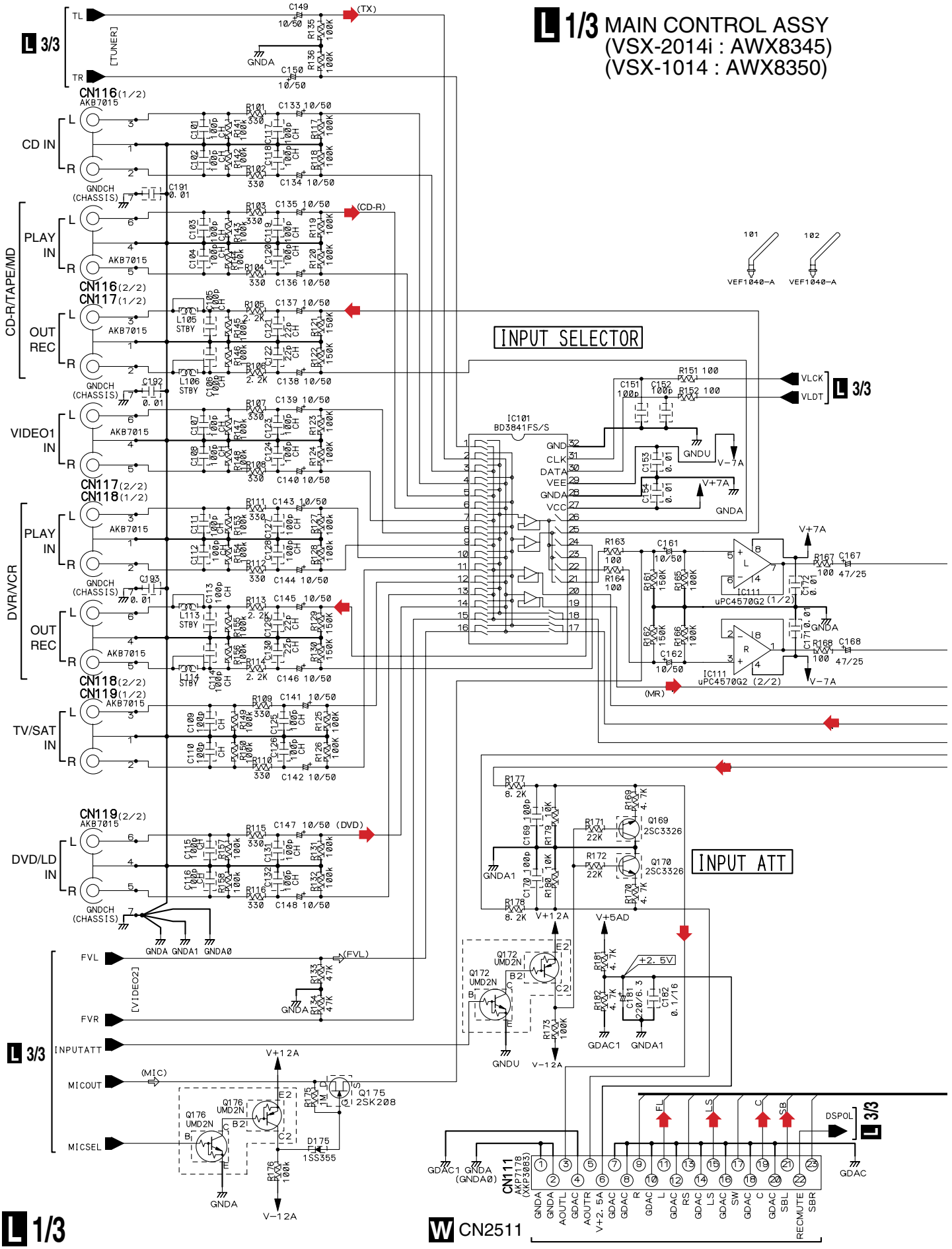

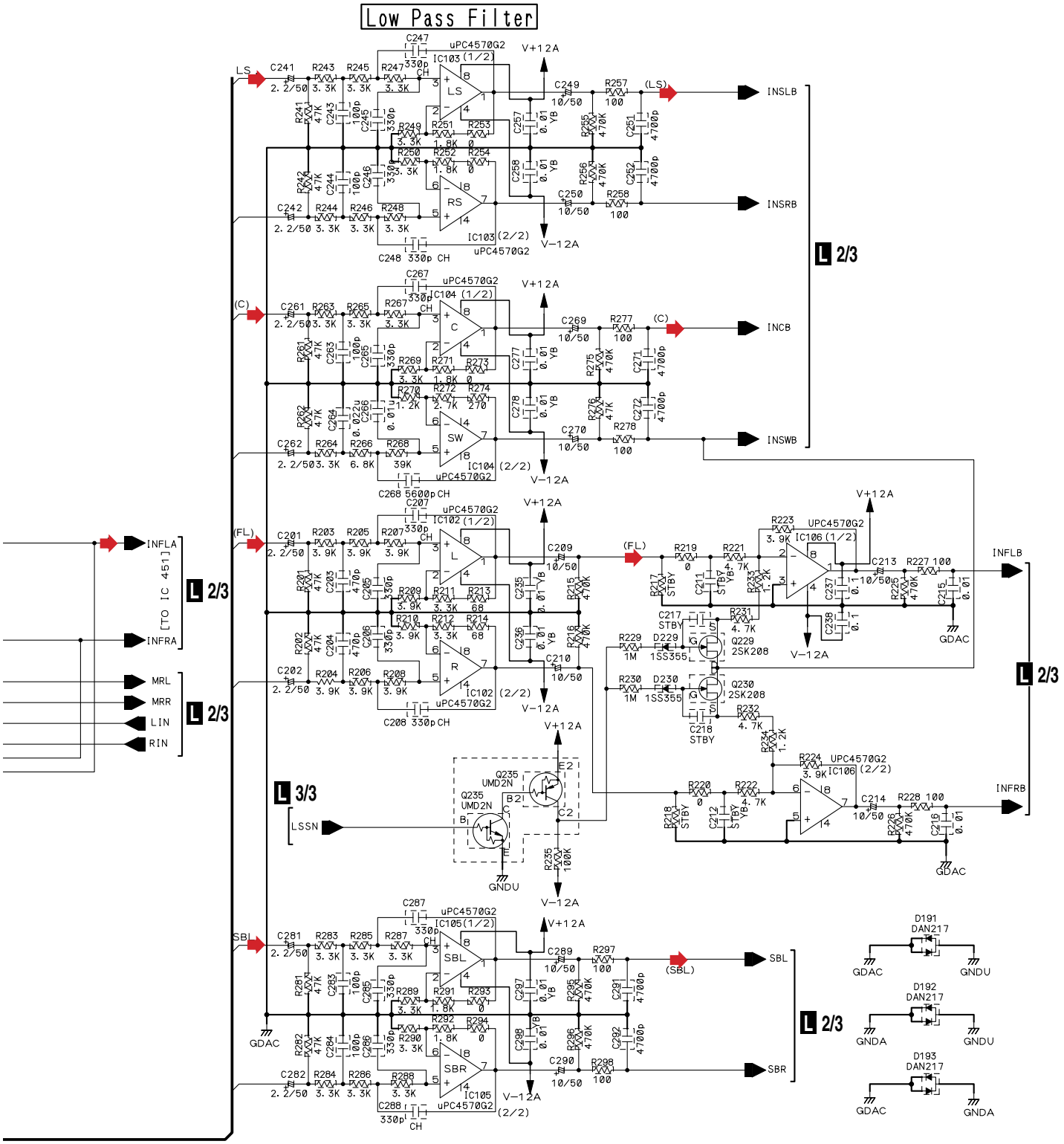
Low Pass Filter
LS
(C)
(FL)
SBL
INFLA
INFRA
MRL
MRR
LIN
RIN
[TO IC 451]
L 2/3
L 3/3
LSSN
INSLB
INSRB
INCB
INSWB
INFLB
INFRB
SBL
SBR
V+12A
V-12A
GDAC
GNDU
GNDA
uPC4570G2
UPC4570G2
IC103 (1/2)
IC103 (2/2)
IC104 (1/2)
IC104 (2/2)
IC102 (1/2)
IC102 (2/2)
IC106 (1/2)
IC106 (2/2)
IC105 (1/2)
IC105 (2/2)
Q235 UMD2N
Q229 2SK208
Q230 2SK208
D229 1SS355
D230 1SS355
D191 DAN217
D192 DAN217
D193 DAN217
(CD-R) : AUDIO SIGNAL ROUTE (CD-R Lch)
(TX) : AUDIO SIGNAL ROUTE (TUNER Lch)
(MR) : AUDIO SIGNAL ROUTE (MULTI-ROOM Lch)
(DVD) : AUDIO SIGNAL ROUTE (DVD Lch)
(FL) : AUDIO SIGNAL ROUTE (FRONT Lch)
(LS) : AUDIO SIGNAL ROUTE (SURROUND Lch)
(SBL) : AUDIO SIGNAL ROUTE (SURROUND BACK Lch)
(C) : AUDIO SIGNAL ROUTE (CENTER ch)

L 1/3

3.9 MAIN CONTROL ASSY (2/3)

L 2/3

MAIN CONTROL ASSY
(VSX-2014i : AWX8345)
(VSX-1014 : AWX8350)

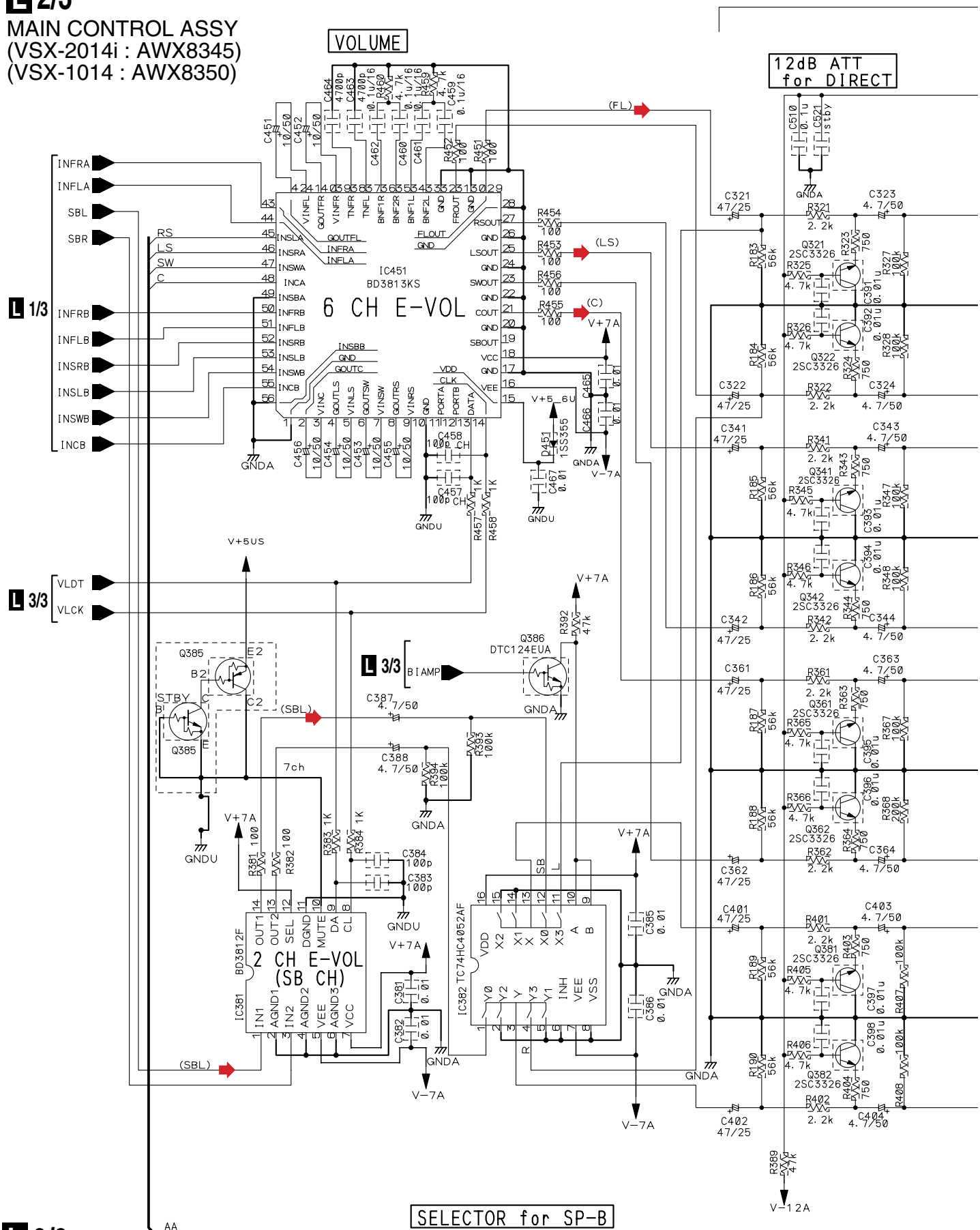

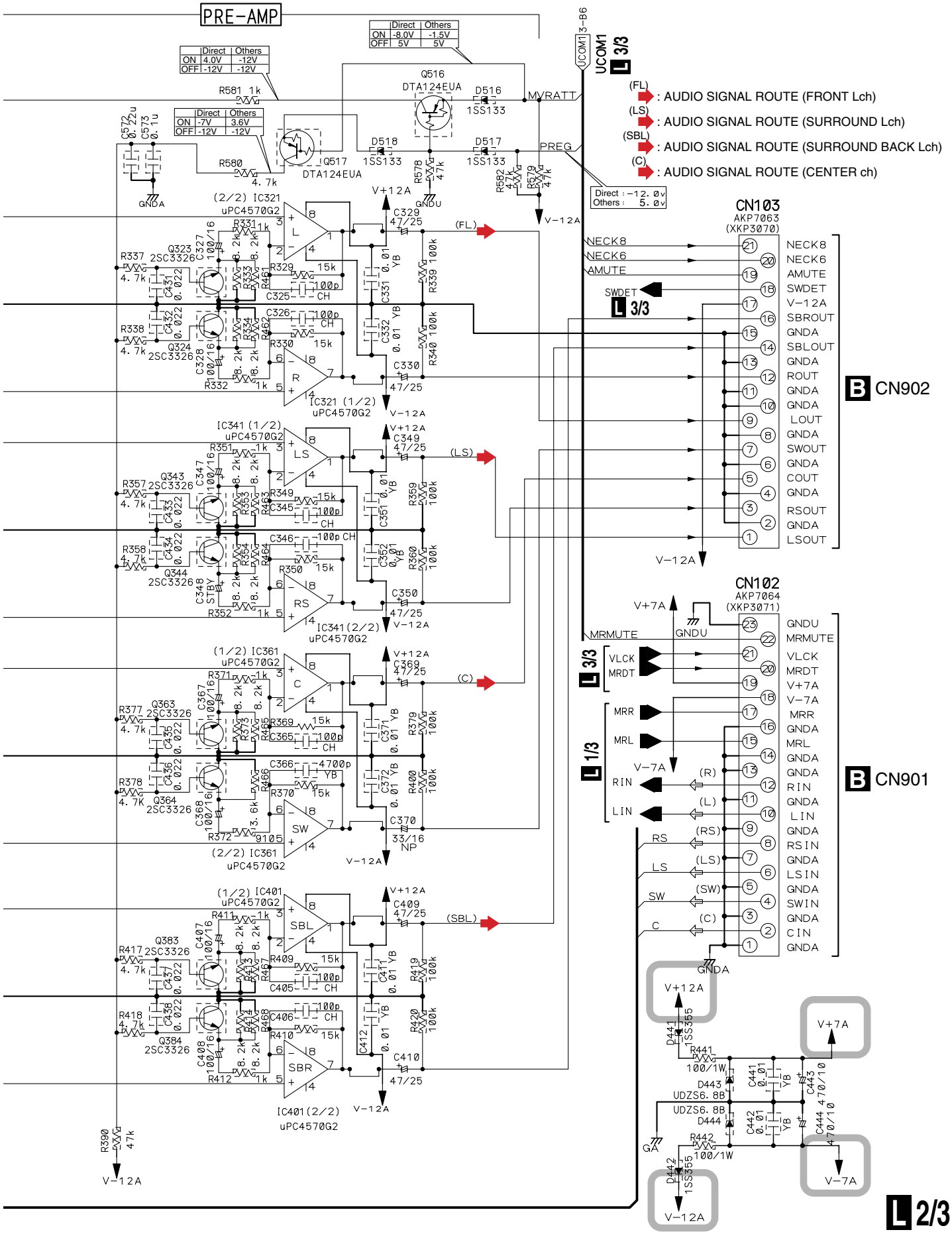
PRE-AMP
UCOM1
L 3/3
(FL) : AUDIO SIGNAL ROUTE (FRONT Lch)
(LS) : AUDIO SIGNAL ROUTE (SURROUND Lch)
(SBL) : AUDIO SIGNAL ROUTE (SURROUND BACK Lch)
(C) : AUDIO SIGNAL ROUTE (CENTER ch)
CN103
AKP7063
(XKP3070)
B CN902
CN102
AKP7064
(XKP3071)
B CN901
L 1/3
L 2/3
IC321 (1/2) uPC4570G2
IC341 (1/2) uPC4570G2
IC341(2/2) uPC4570G2
(1/2) IC361 uPC4570G2
(2/2) IC361 uPC4570G2
(1/2) IC401 uPC4570G2
IC401(2/2) uPC4570G2
Q516 DTA124EUA
Q517 DTA124EUA
D516 1SS133
D517 1SS133
D518 1SS133
MVRATT
PREG
V+12A
V-12A
V+7A
V-7A
GNDA
GNDU

3.10 MAIN CONTROL ASSY (3/3)

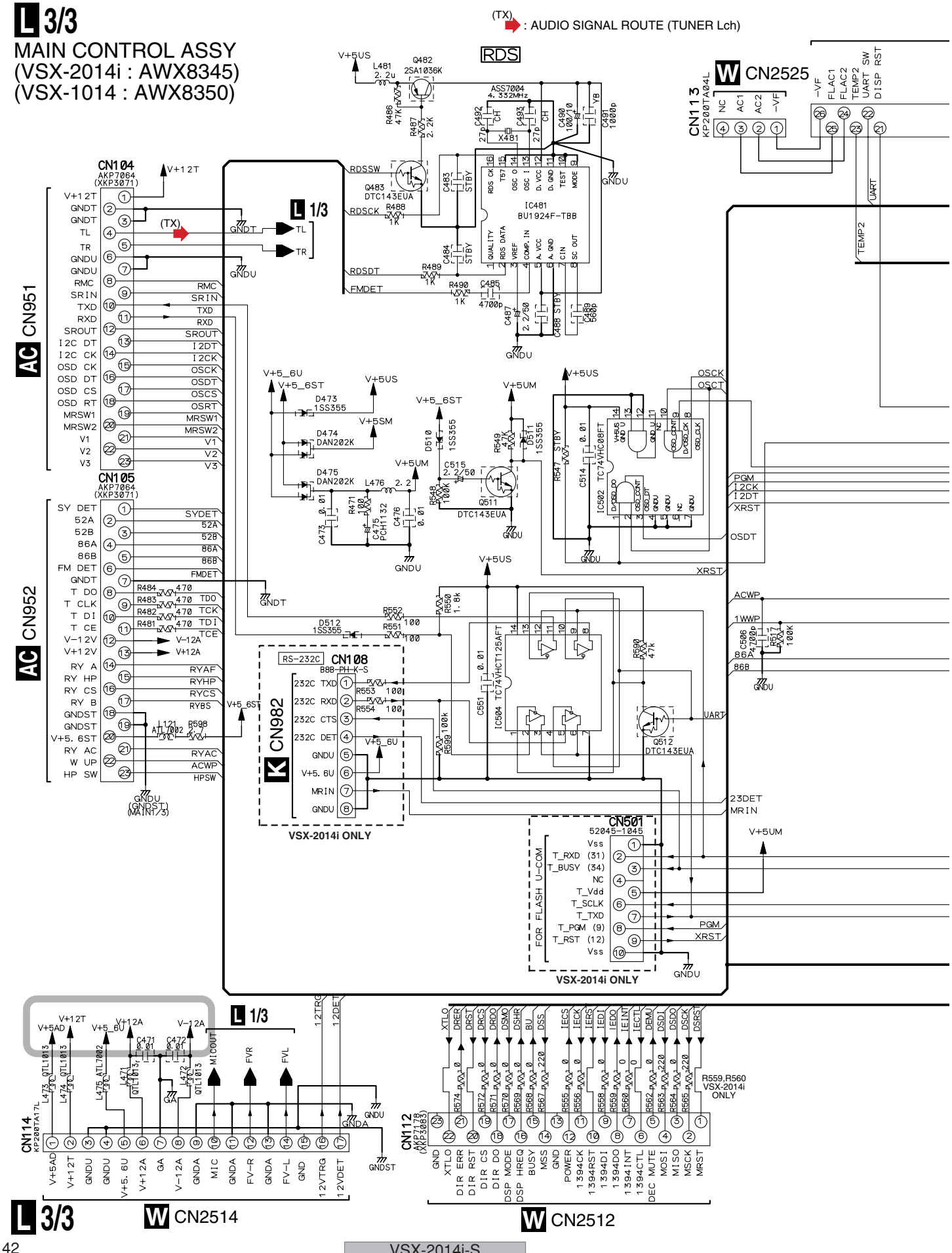

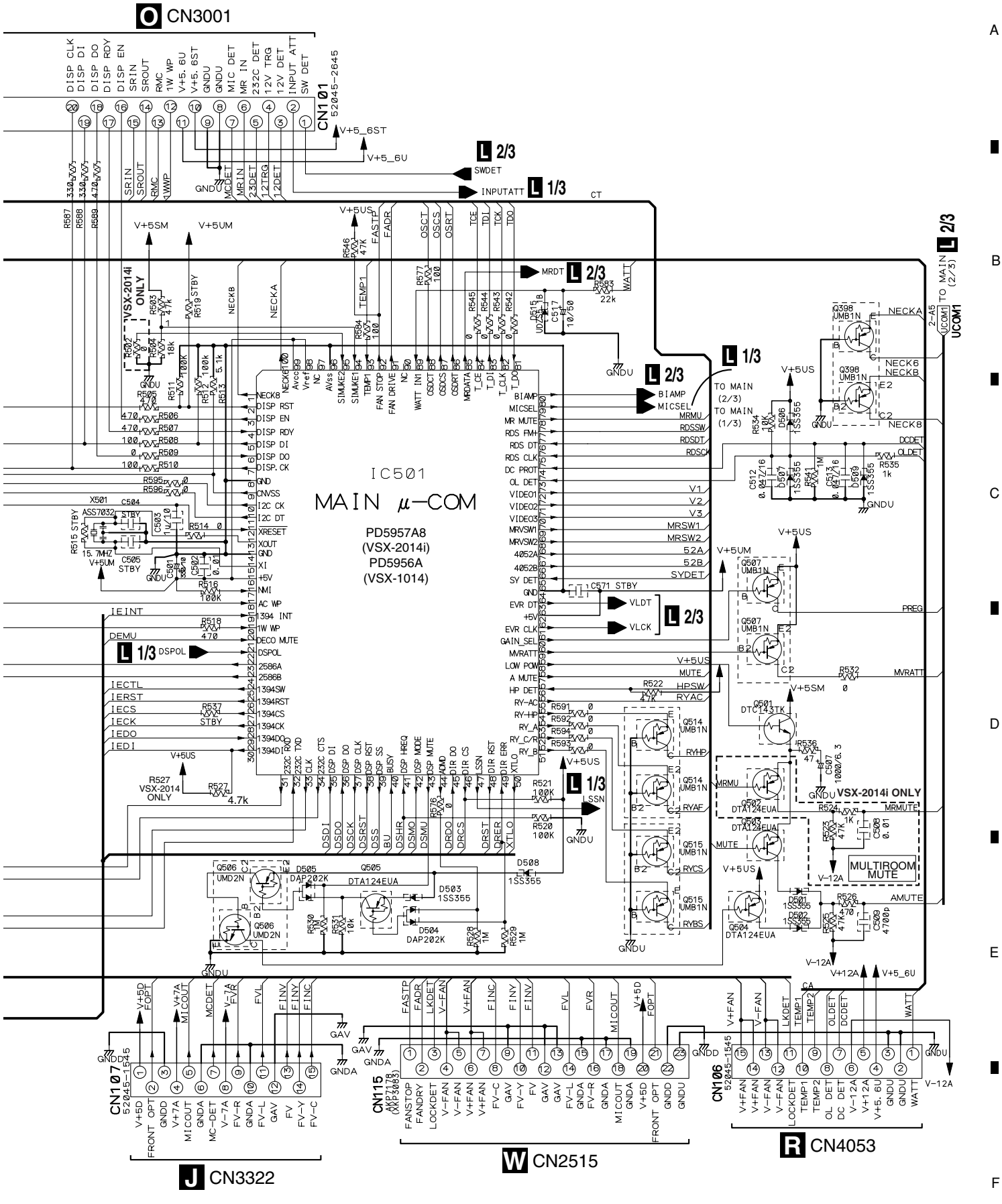
O CN3001
CN101
52045-2645
DISP CLK
DISP DI
DISP DO
DISP RDY
DISP EN
SRIN
SROUT
RMC
1W WP
V+5. 6U
V+5. 6ST
GNDU
MIC DET
MR IN
232C DET
12V TRG
12V DET
INPUT ATT
SW DET
V+5_6ST
V+5_6U
SWDET
INPUTATT
L 2/3
L 1/3
IC501
MAIN μ-COM
PD5957A8
(VSX-2014i)
PD5956A
(VSX-1014)
VSX-2014i ONLY
L 1/3 DSPOL
L 2/3 SSN
L 2/3 VLDT
L 2/3 VLCK
MRDT
BIAMP
MICSEL
MRMU
RDSSW
RDSDT
RDSCL
V1
V2
V3
MRSW1
MRSW2
52A
52B
SYDET
VLDT
VLCK
MUTE
HPSW
RYAC
RYHP
RYAF
RYCS
RYBS
MRMUTE
AMUTE
MULTIROOM MUTE
TO MAIN (2/3)
TO MAIN (1/3)
UCOM1
J CN3322
W CN2515
R CN4053
L 3/3

3.11 DSP ASSY (1/2)

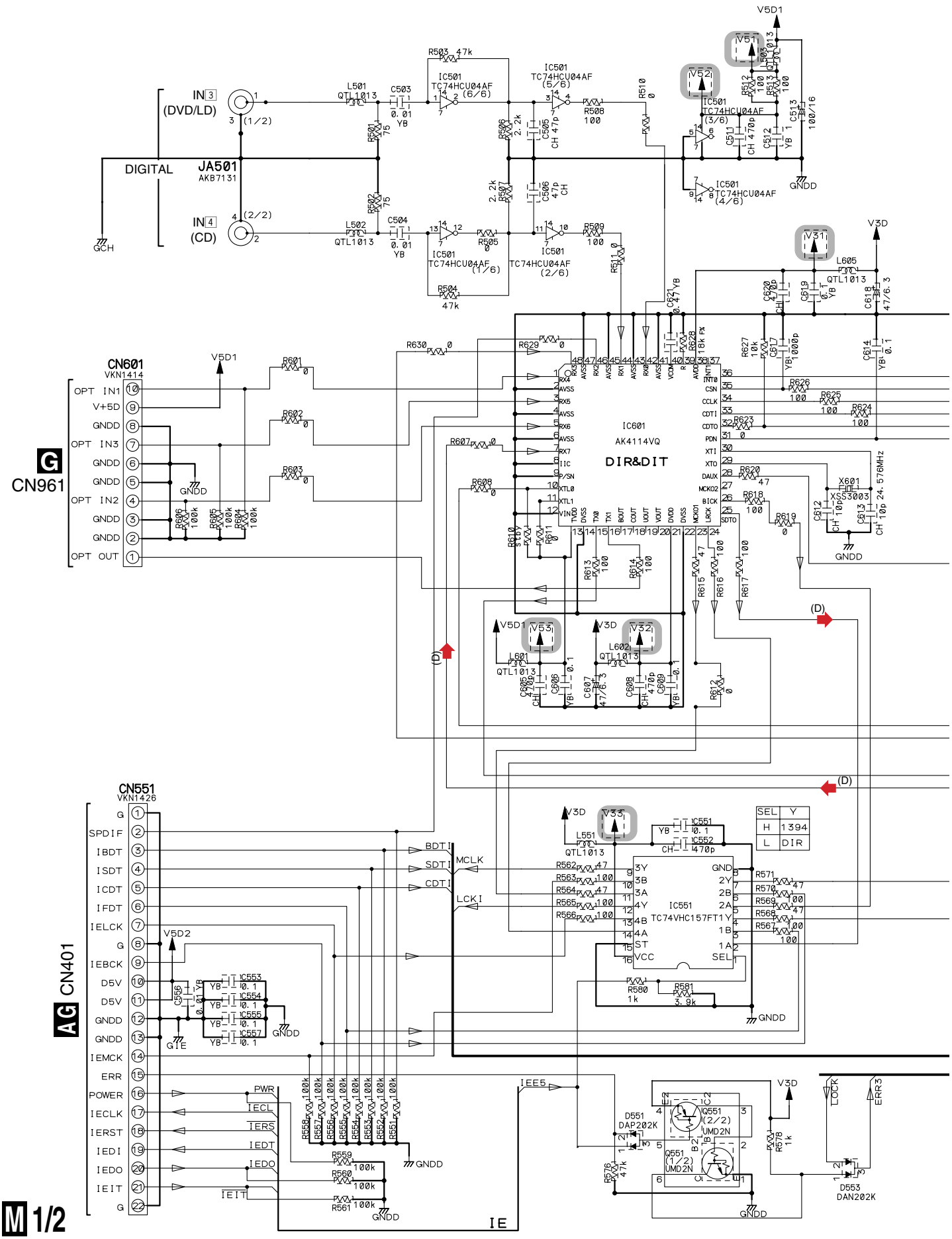

M 1/2 DSP ASSY (AWX8414)

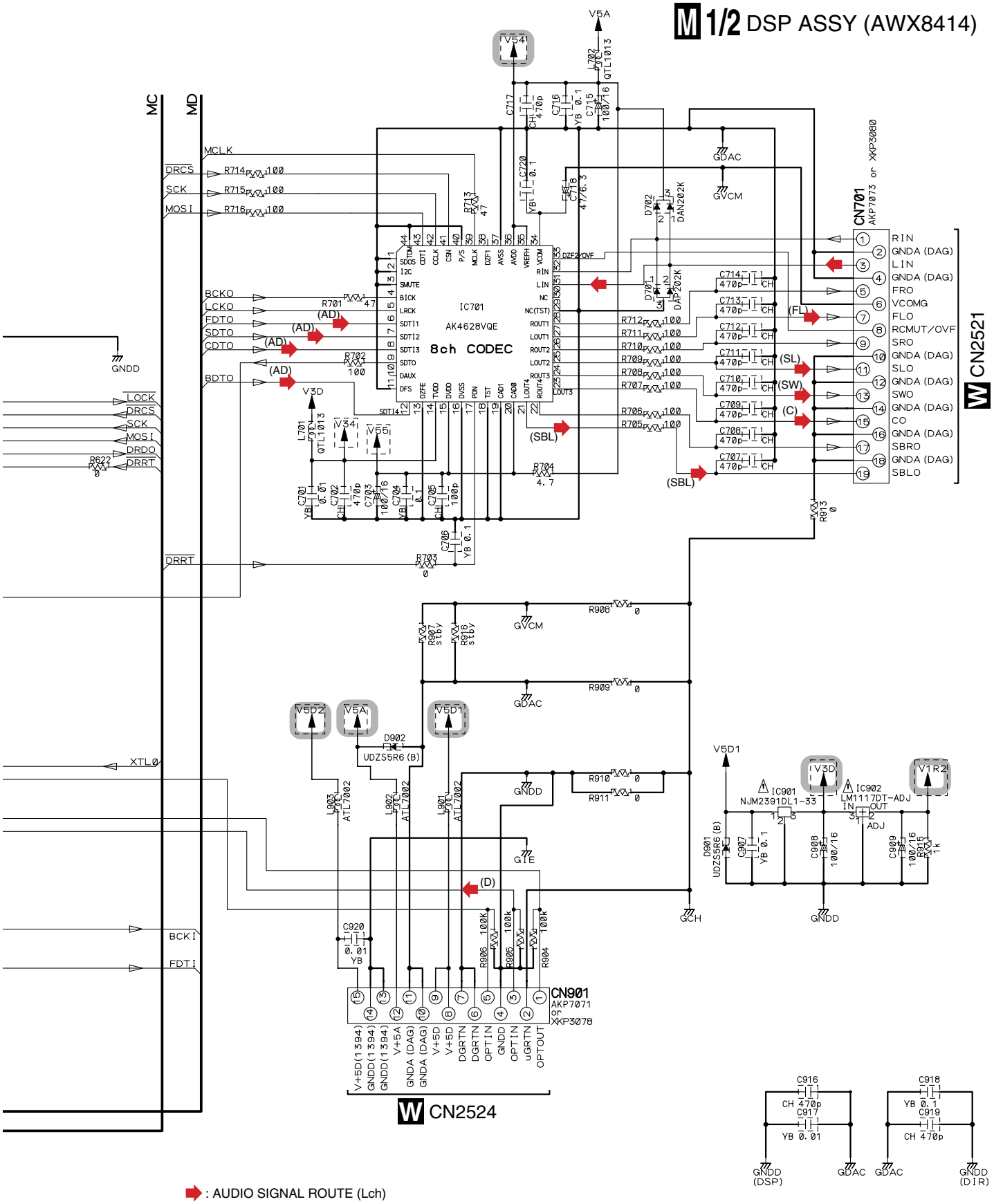

: AUDIO SIGNAL ROUTE (Lch)

(D) : AUDIO SIGNAL ROUTE (DIGITAL)

(FL) : AUDIO SIGNAL ROUTE (FRONT Lch)

(C) : AUDIO SIGNAL ROUTE (CENTER ch)

(SL) : SURROUND SIGNAL ROUTE

(SBL) : AUDIO SIGNAL ROUTE (SURROUND BACK Lch)

(SW) : AUDIO SIGNAL ROUTE (SUB WOOFER ch)

M 1/2

3.12 DSP ASSY (2/2)

M 2/2 DSP ASSY (AWX8414)

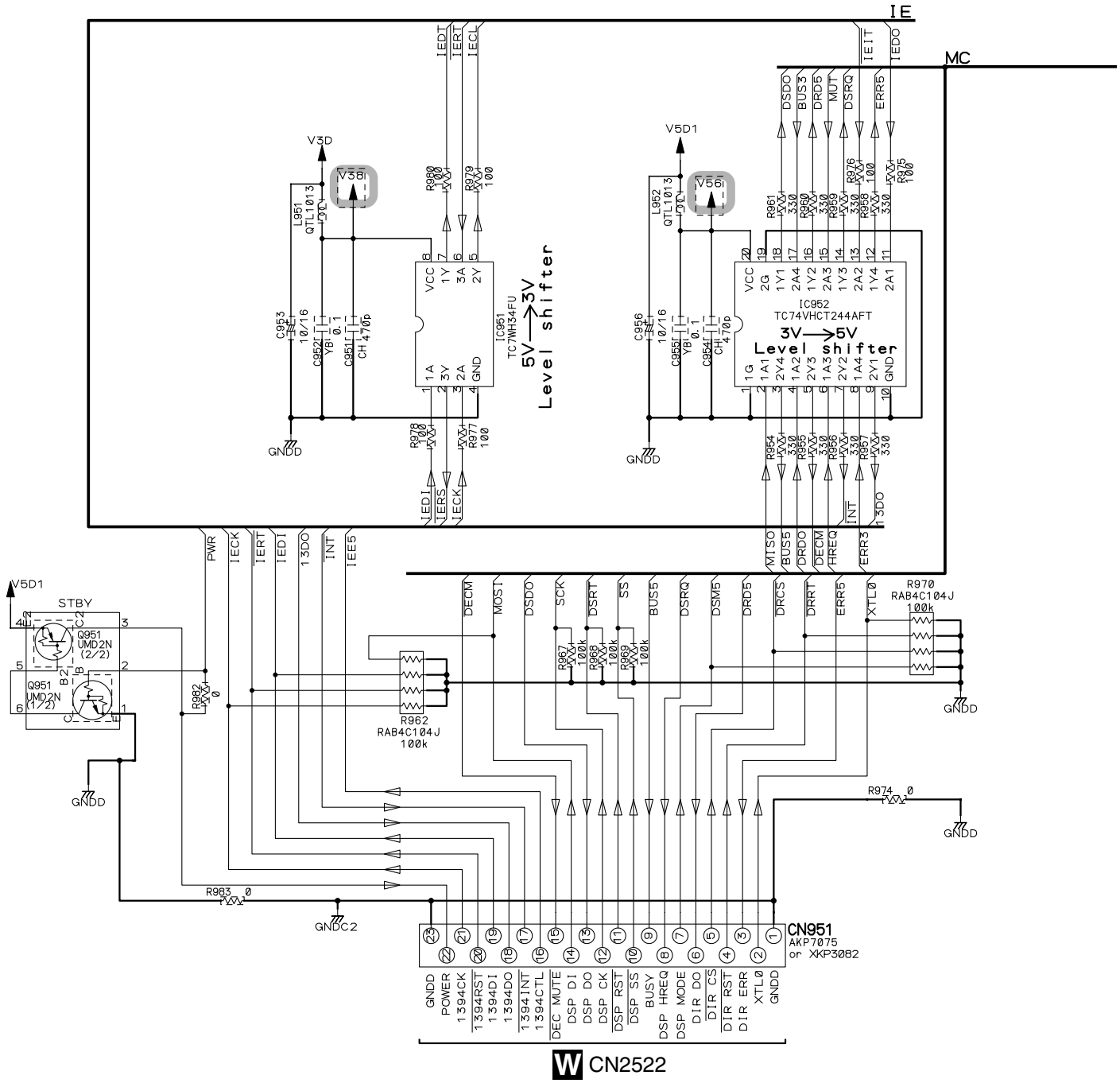

M 2/2

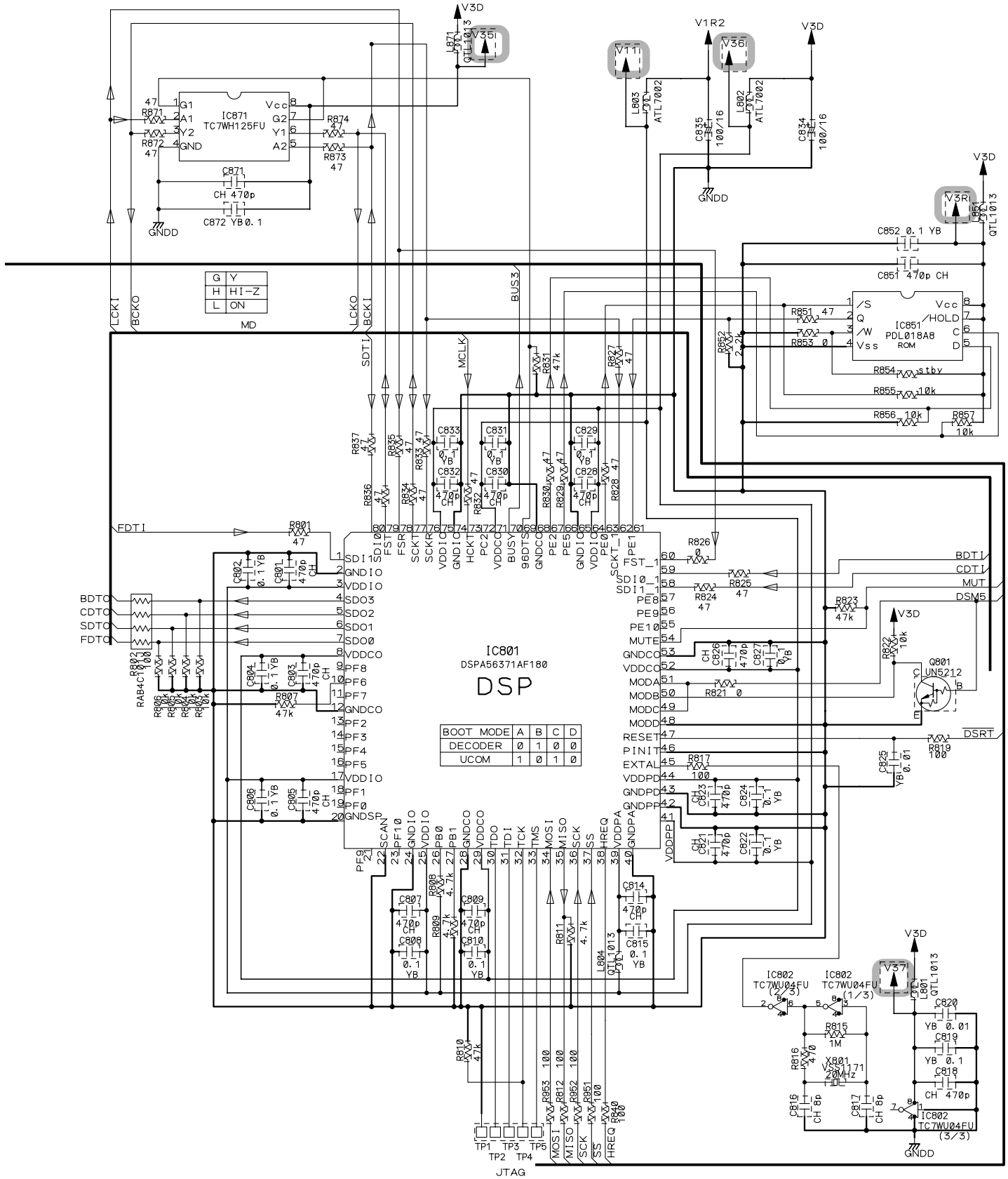
IC801
DSPA56371AF180
DSP
IC871
TC7WH125FU
IC851
PDL018A8
ROM
IC802
TC7WU04FU
MD
JTAG
V3D
V1R2
GNDD
FDTI
BDTI
CDTI
MUT
DSMS
DSRT
LCKI
BCKO
LCKO
BCKI
SDTI
MCLK
BUS3
stby
BOOT MODE | A | B | C | D
DECODER | 0 | 1 | 0 | 0
UCOM | 1 | 0 | 1 | 0
G | Y
H | HI-Z
L | ON

3.13 1394 ASSY (1/2) (VSX-2014i ONLY)

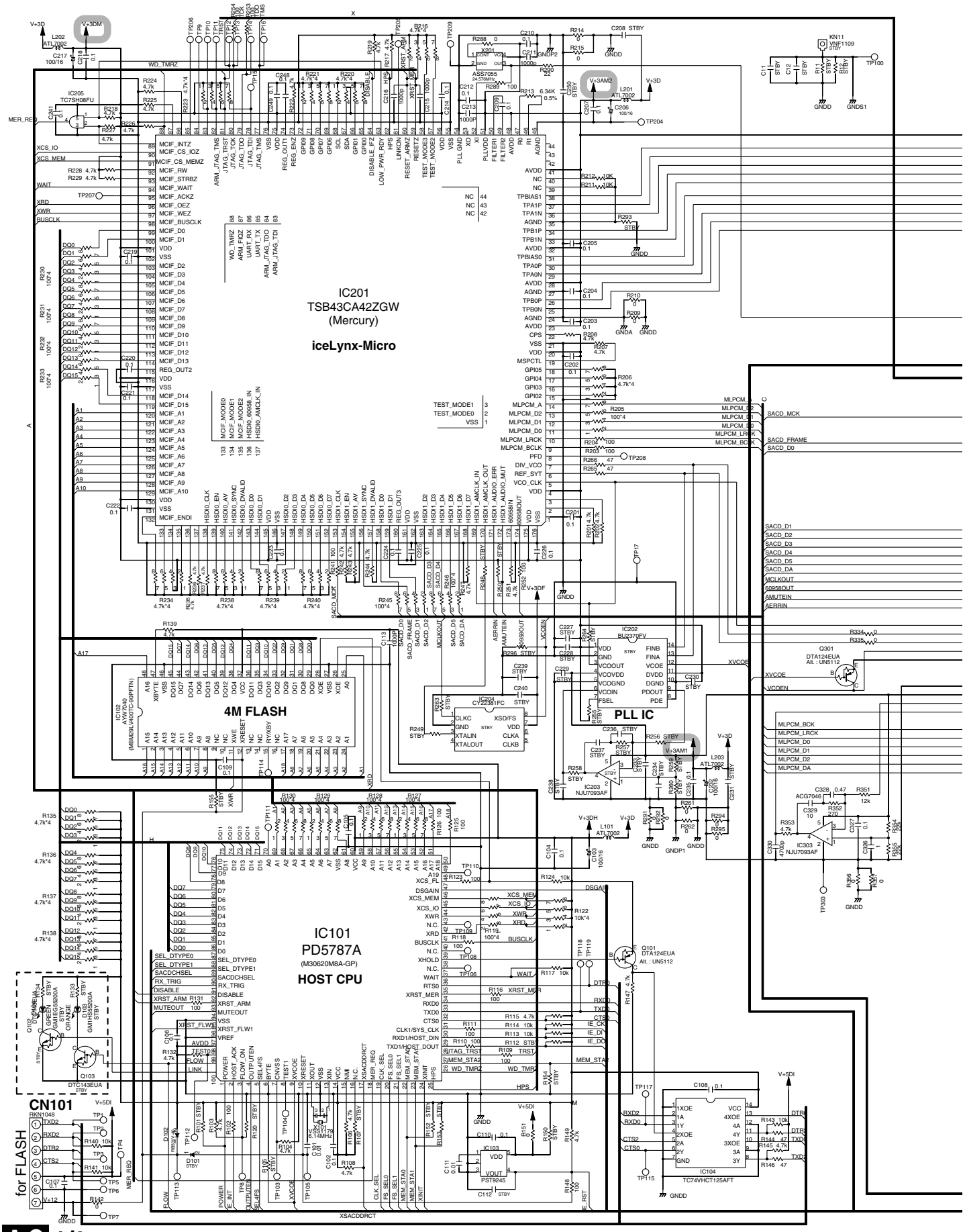

AG 1/2

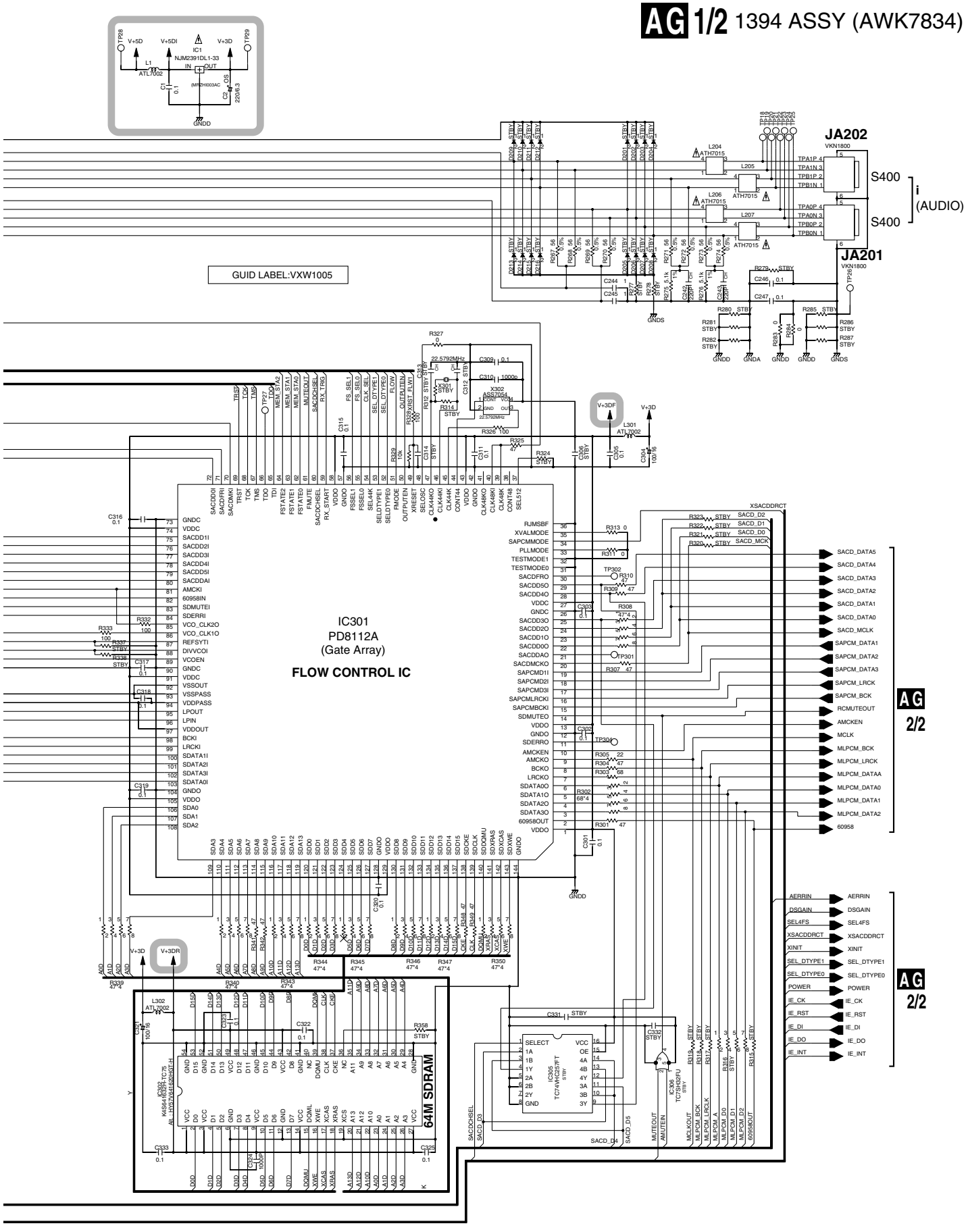
GUID LABEL:VXW1005
IC301
PD8112A
(Gate Array)
FLOW CONTROL IC
JA202
VKN1800
JA201
VKN1800
S400
S400
i
(AUDIO)
64M SDRAM
IC1
NJM2391DL1-33
ATL7002
V+5D
V+5DI
V+3D
V+3DF
V+3DR
GNDD
GNDA
GNDS
XSACDDRCT
SACD_DATA5
SACD_DATA4
SACD_DATA3
SACD_DATA2
SACD_DATA1
SACD_DATA0
SACD_MCLK
SAPCM_DATA1
SAPCM_DATA2
SAPCM_DATA3
SAPCM_LRCK
SAPCM_BCK
RCMUTEOUT
AMCKEN
MCLK
MLPCM_BCK
MLPCM_LRCK
MLPCM_DATAA
MLPCM_DATA0
MLPCM_DATA1
MLPCM_DATA2
60958
AG 2/2
AERRIN
DSGAIN
SEL4FS
XSACDDRCT
XINIT
SEL_DTYPE1
SEL_DTYPE0
POWER
IE_CK
IE_RST
IE_DI
IE_DO
IE_INT
AG 2/2

3.14 1394 ASSY (2/2) (VSX-2014i ONLY)

AG 2/2 1394 ASSY (AWK7834)

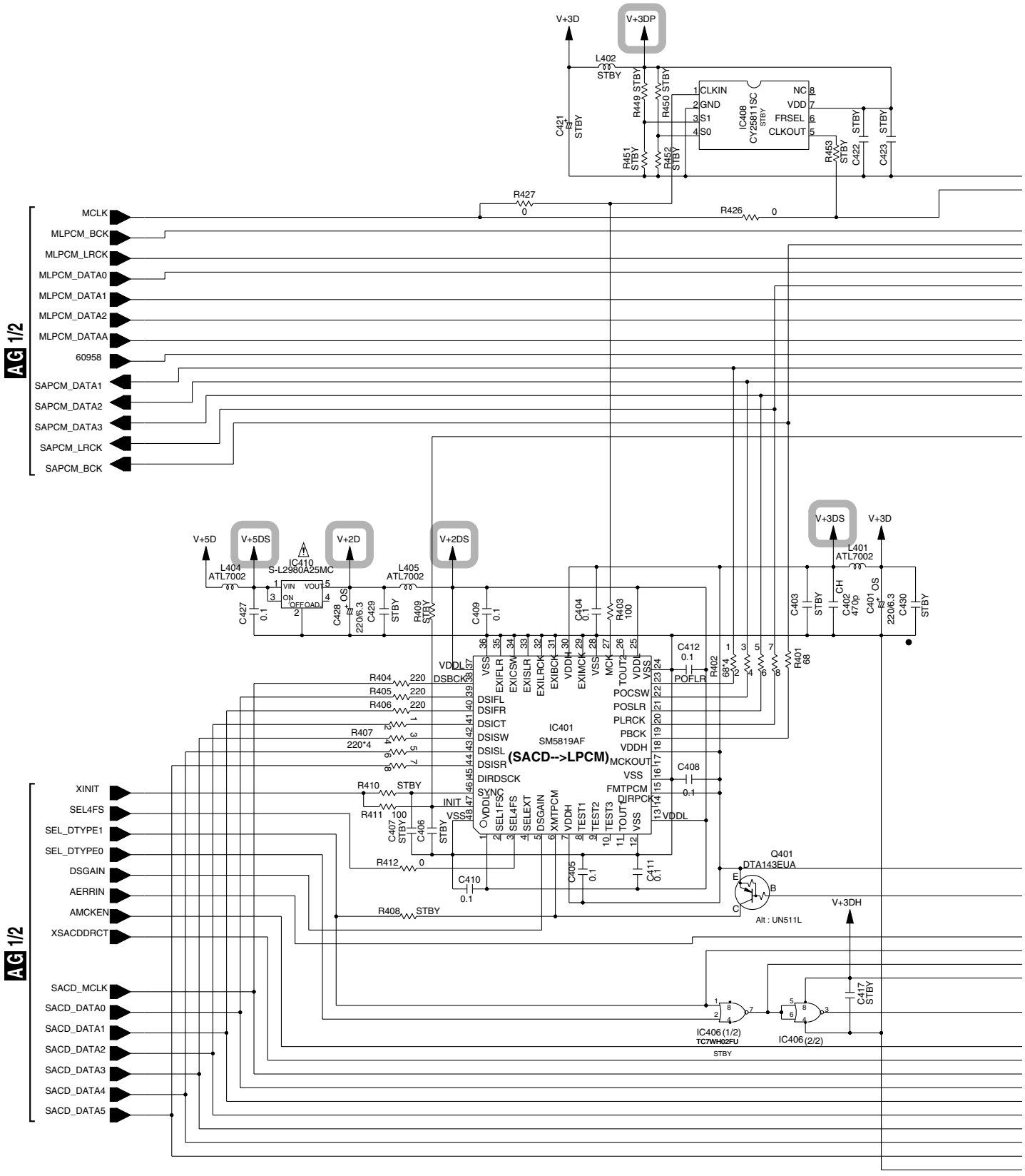

AG 2/2

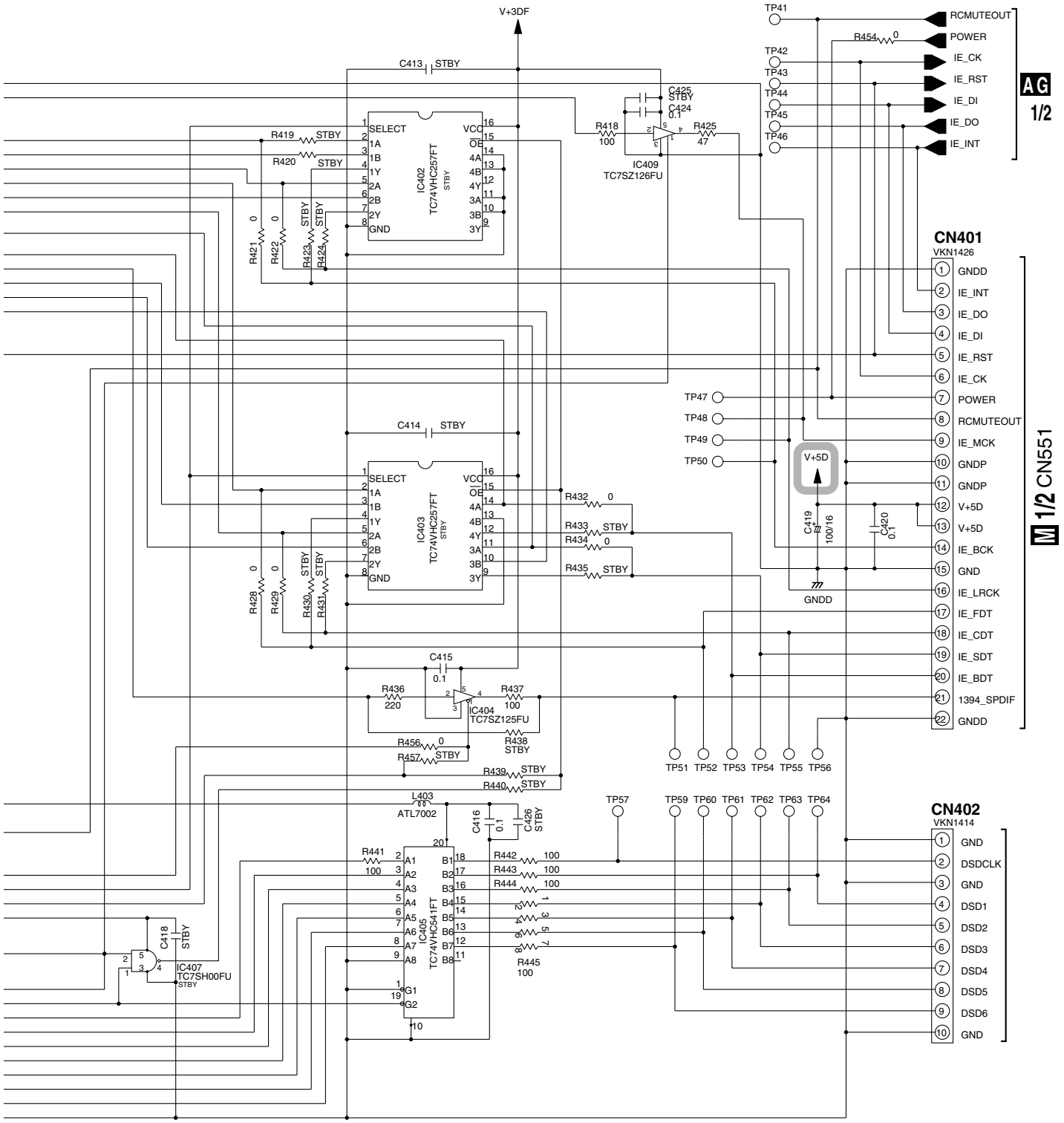
V+3DF
C413 STBY
C425 STBY
C424 0.1
IC409
TC7SZ126FU
R418 100
R425 47
R454 0
TP41
TP42
TP43
TP44
TP45
TP46
RCMUTEOUT
POWER
IE_CK
IE_RST
IE_DI
IE_DO
IE_INT
AG 1/2
IC402
TC74VHC257FT
STBY
SELECT
1A
1B
1Y
2A
2B
2Y
GND
VCC
OE
4A
4B
4Y
3A
3B
3Y
R419 STBY
R420 STBY
R421 0
R422 0
R423 STBY
R424 STBY
CN401
VKN1426
GNDD
IE_INT
IE_DO
IE_DI
IE_RST
IE_CK
POWER
RCMUTEOUT
IE_MCK
GNDP
GNDP
V+5D
V+5D
IE_BCK
GND
IE_LRCK
IE_FDT
IE_CDT
IE_SDT
IE_BDT
1394_SPDIF
GNDD
M 1/2 CN551
TP47
TP48
TP49
TP50
V+5D
C419 100/16
C420 0.1
C414 STBY
IC403
TC74VHC257FT
STBY
R432 0
R433 STBY
R434 0
R435 STBY
R428 0
R429 0
R430 STBY
R431 STBY
C415 0.1
IC404
TC7SZ125FU
R436 220
R437 100
R438 STBY
R456 0
R457 STBY
R439 STBY
R440 STBY
TP51 TP52 TP53 TP54 TP55 TP56
L403
ATL7002
C416 0.1
C426 STBY
TP57
TP59 TP60 TP61 TP62 TP63 TP64
CN402
VKN1414
GND
DSDCLK
GND
DSD1
DSD2
DSD3
DSD4
DSD5
DSD6
GND
R441 100
IC405
TC74VHC541FT
A1 A2 A3 A4 A5 A6 A7 A8
B1 B2 B3 B4 B5 B6 B7 B8
G1
G2
R442 100
R443 100
R444 100
R445 100
C418 STBY
IC407
TC7SH00FU
STBY
AG 2/2

3.15 VOLUME, DISPLAY and MULTI JOG ASSYS

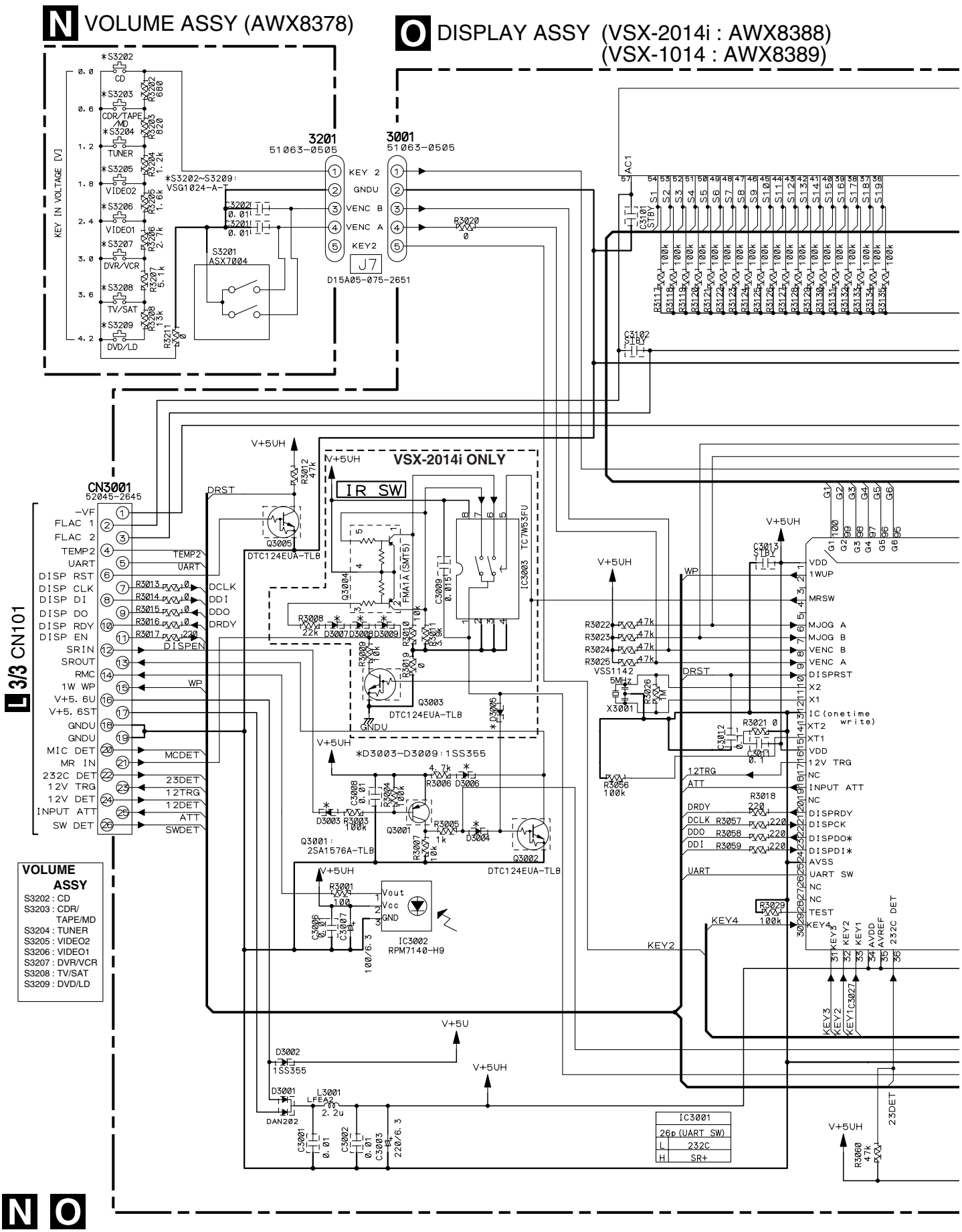

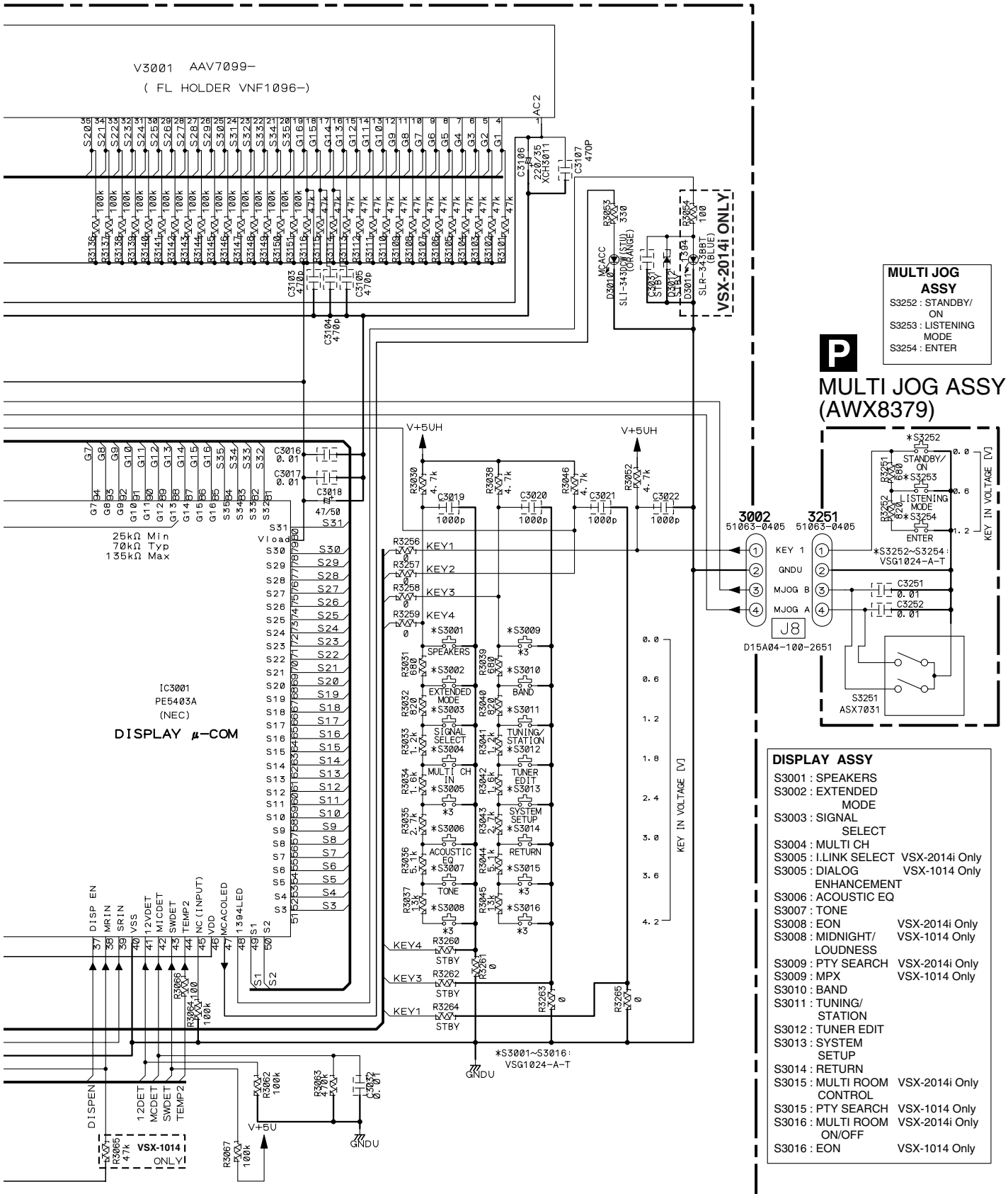
V3001 AAV7099–
(FL HOLDER VNF1096–)
VSX-2014i ONLY
MULTI JOG ASSY
S3252 : STANDBY/ ON
S3253 : LISTENING MODE
S3254 : ENTER
P
MULTI JOG ASSY (AWX8379)
3002 51063-0405
3251 51063-0405
KEY 1
GNDU
MJOG B
MJOG A
J8
D15A04-100-2651
KEY IN VOLTAGE [V]
*S3252~S3254: VSG1024-A-T
S3251 ASX7031
IC3001 PE5403A (NEC)
DISPLAY μ-COM
25kΩ Min
70kΩ Typ
135kΩ Max
V+5UH
*S3001~S3016: VSG1024-A-T
VSX-1014 ONLY
DISPEN
12DET
MCDET
SWDET
TEMP2
DISP EN
MRIN
SRIN
VSS
12VDET
MICDET
SWDET
TEMP2
NC(INPUT)
VDD
MCACCLED
1394LED
DISPLAY ASSY
S3001 : SPEAKERS
S3002 : EXTENDED MODE
S3003 : SIGNAL SELECT
S3004 : MULTI CH
S3005 : I.LINK SELECT VSX-2014i Only
S3005 : DIALOG ENHANCEMENT VSX-1014 Only
S3006 : ACOUSTIC EQ
S3007 : TONE
S3008 : EON VSX-2014i Only
S3008 : MIDNIGHT/ LOUDNESS VSX-1014 Only
S3009 : PTY SEARCH VSX-2014i Only
S3009 : MPX VSX-1014 Only
S3010 : BAND
S3011 : TUNING/ STATION
S3012 : TUNER EDIT
S3013 : SYSTEM SETUP
S3014 : RETURN
S3015 : MULTI ROOM CONTROL VSX-2014i Only
S3015 : PTY SEARCH VSX-1014 Only
S3016 : MULTI ROOM ON/OFF VSX-2014i Only
S3016 : EON VSX-1014 Only

O P

3.16 POWER AMP IN and POWER PROTECT ASSYS

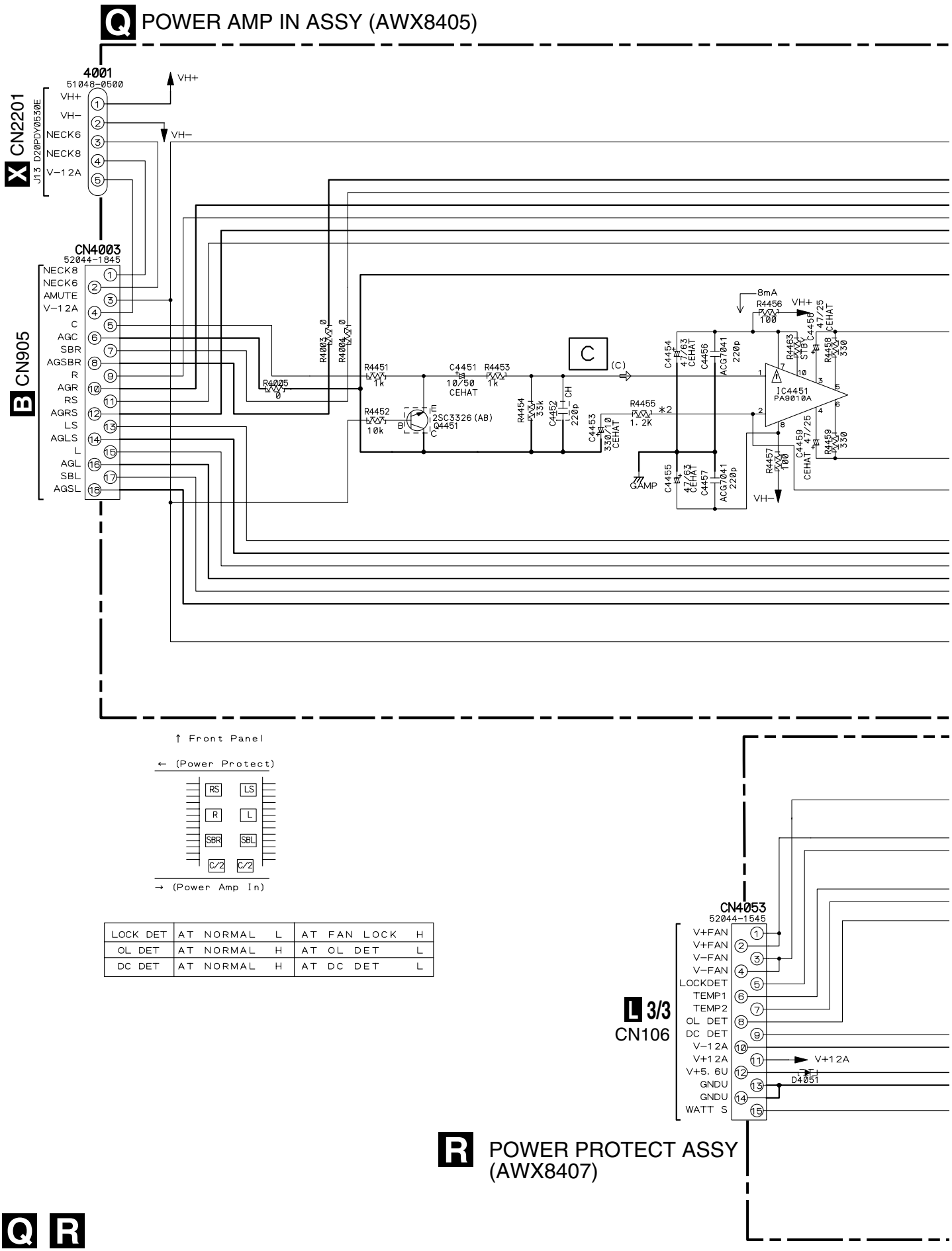

LOCK DET	AT NORMAL	L	AT FAN LOCK	H
OL DET	AT NORMAL	H	AT OL DET	L
DC DET	AT NORMAL	H	AT DC DET	L

Q R

(C) : AUDIO SIGNAL ROUTE (CENTER ch)

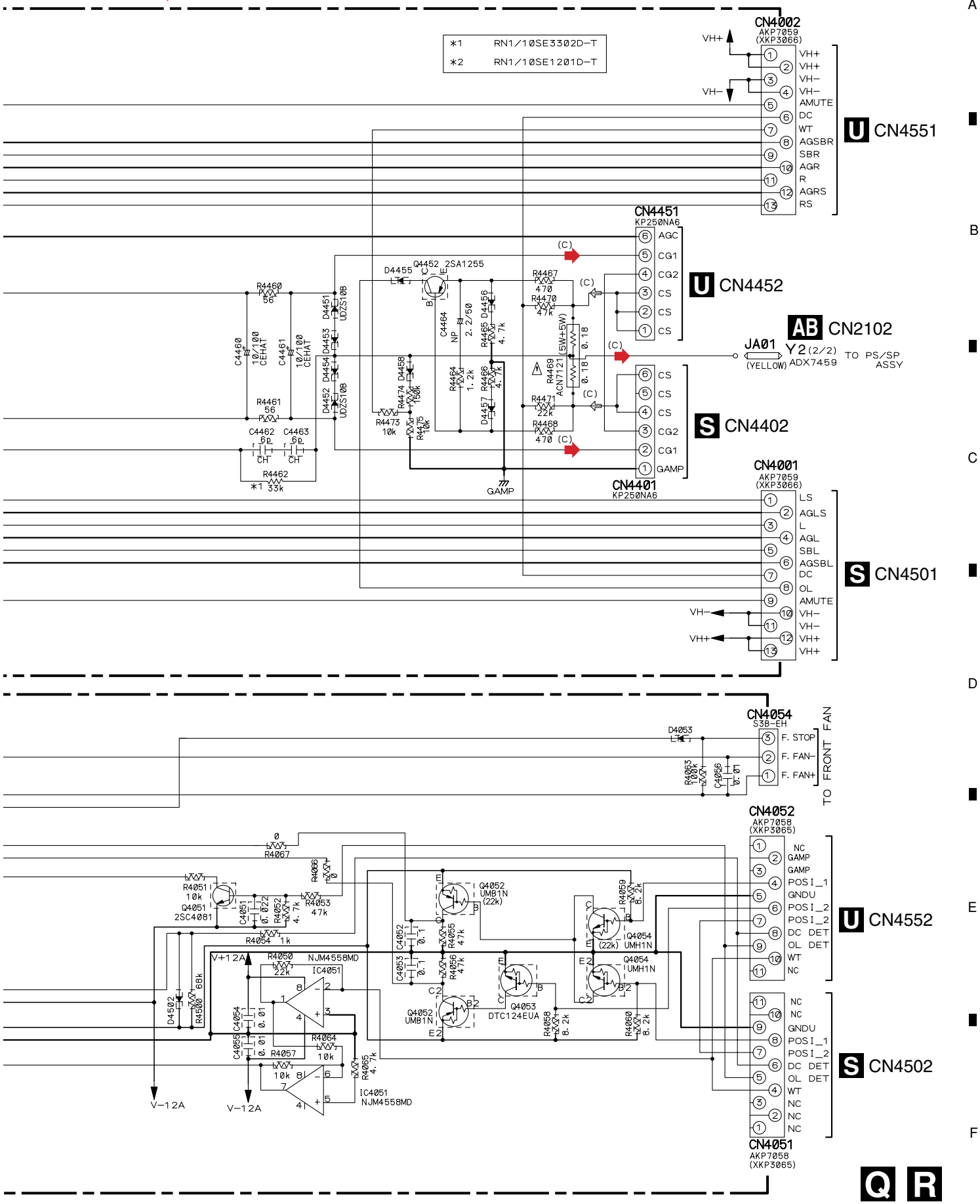

Q R

3.17 POWER AMP-L, POSI 1 L and POSI 2 L ASSYS

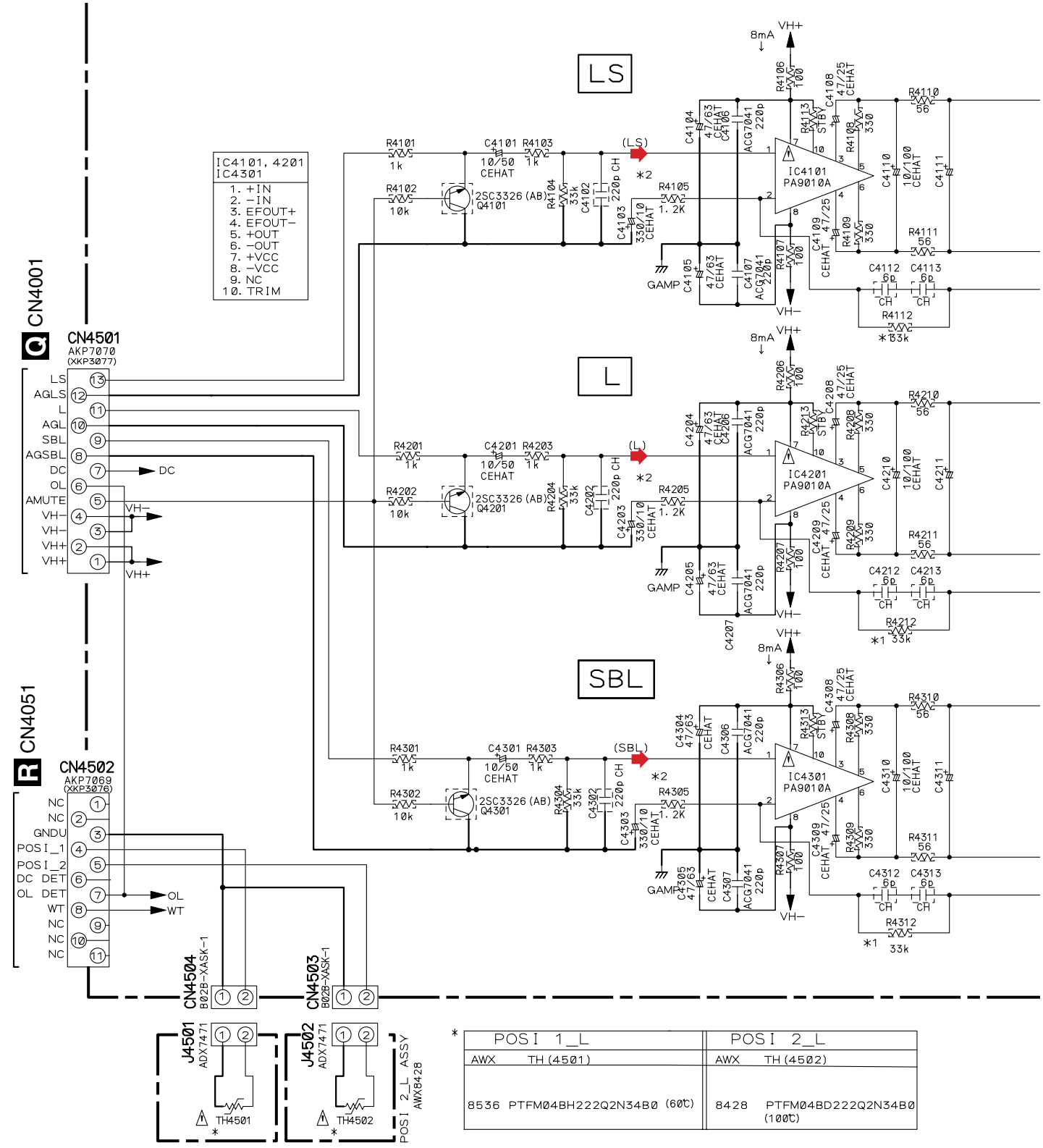

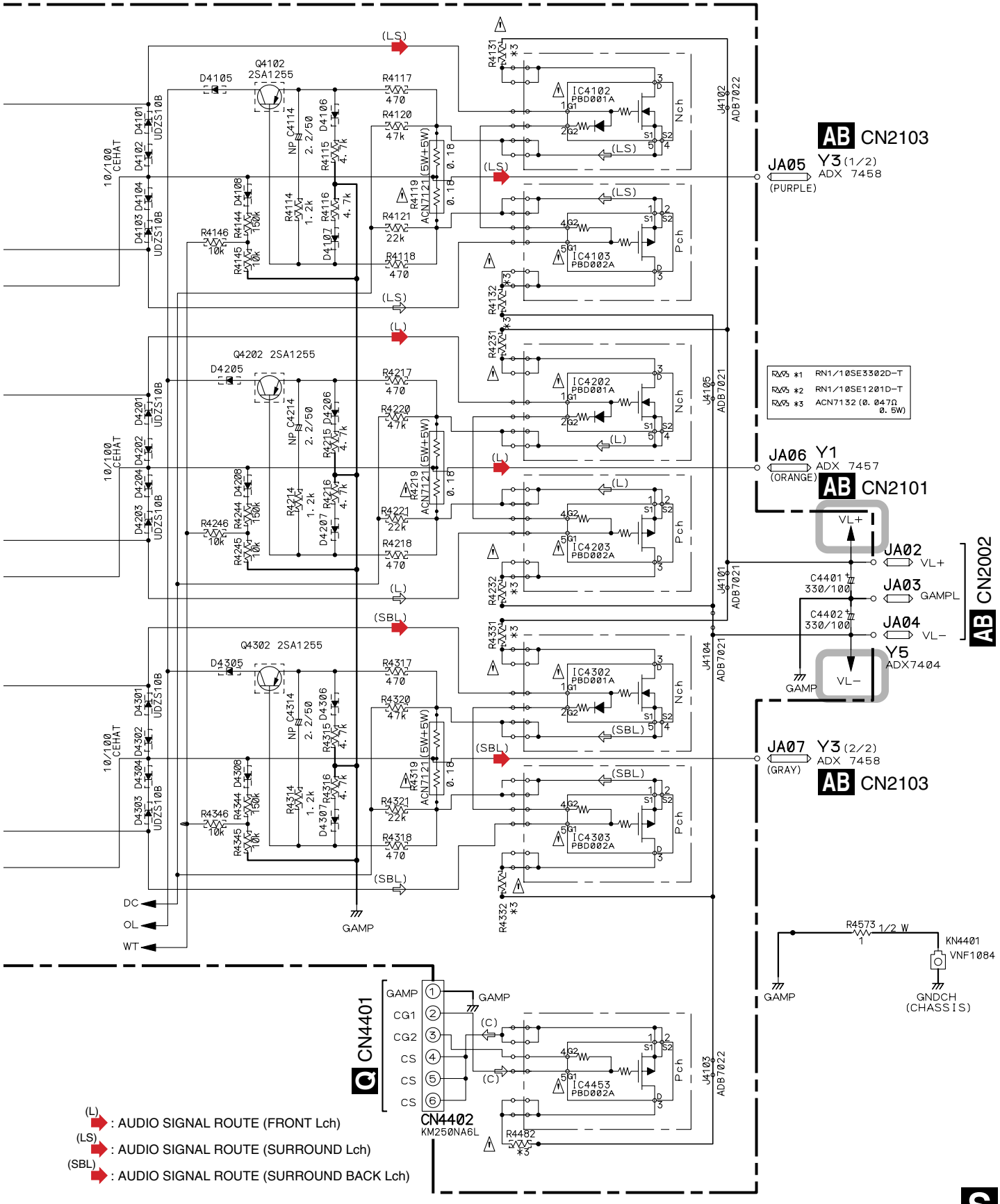
(LS)
(L)
(SBL)
Q4102 2SA1255
Q4202 2SA1255
Q4302 2SA1255
D4105
D4205
D4305
R4117 470
R4120 47k
R4121 22k
R4118 470
R4217 470
R4220 47k
R4221 22k
R4218 470
R4317 470
R4320 47k
R4321 22k
R4318 470
R4119 ACN7121 (5W+5W) 0.18
R4219 ACN7121 (5W+5W) 0.18
R4319 ACN7121 (5W+5W) 0.18
NP C4114 2.2/50
NP C4214 2.2/50
NP C4314 2.2/50
R4114 1.2k
R4214 1.2k
R4314 1.2k
R4116 4.7k
R4216 4.7k
R4316 4.7k
R4146 10k
R4246 10k
R4346 10k
R4145 10k
R4245 10k
R4345 10k
D4101 UDZS10B
D4102 UDZS10B
D4103 UDZS10B
D4104 UDZS10B
D4201 UDZS10B
D4202 UDZS10B
D4203 UDZS10B
D4204 UDZS10B
D4301 UDZS10B
D4302 UDZS10B
D4303 UDZS10B
D4304 UDZS10B
10/100 CEHAT
R4131 *3
R4132 *3
R4231 *3
R4232 *3
R4331 *3
R4332 *3
R4482 *3
IC4102 PBD001A
IC4103 PBD002A
IC4202 PBD001A
IC4203 PBD002A
IC4302 PBD001A
IC4303 PBD002A
IC4453 PBD002A
Nch
Pch
J4102 ADB7022
J4105 ADB7021
J4101 ADB7021
J4104 ADB7021
J4103 ADB7022
*1 RN1/10SE3302D-T
*2 RN1/10SE1201D-T
*3 ACN7132 (0.047Ω 0.5W)
AB CN2103
JA05 Y3 (1/2) ADX 7458
(PURPLE)
JA06 Y1 ADX 7457
(ORANGE)
AB CN2101
JA07 Y3 (2/2) ADX 7458
(GRAY)
AB CN2103
VL+
VL−
JA02 VL+
JA03 GAMPL
JA04 VL−
AB CN2002
C4401 330/100
C4402 330/100
Y5 ADX7404
GAMP
DC
OL
WT
R4573 1/2 W 1
KN4401 VNF1084
GNDCH (CHASSIS)
Q CN4401
GAMP
CG1
CG2
CS
CS
CS
CN4402 KM250NA6L
(C)
(L) : AUDIO SIGNAL ROUTE (FRONT Lch)
(LS) : AUDIO SIGNAL ROUTE (SURROUND Lch)
(SBL) : AUDIO SIGNAL ROUTE (SURROUND BACK Lch)

3.18 POWER AMP-R and POSI 1 R ASSYS

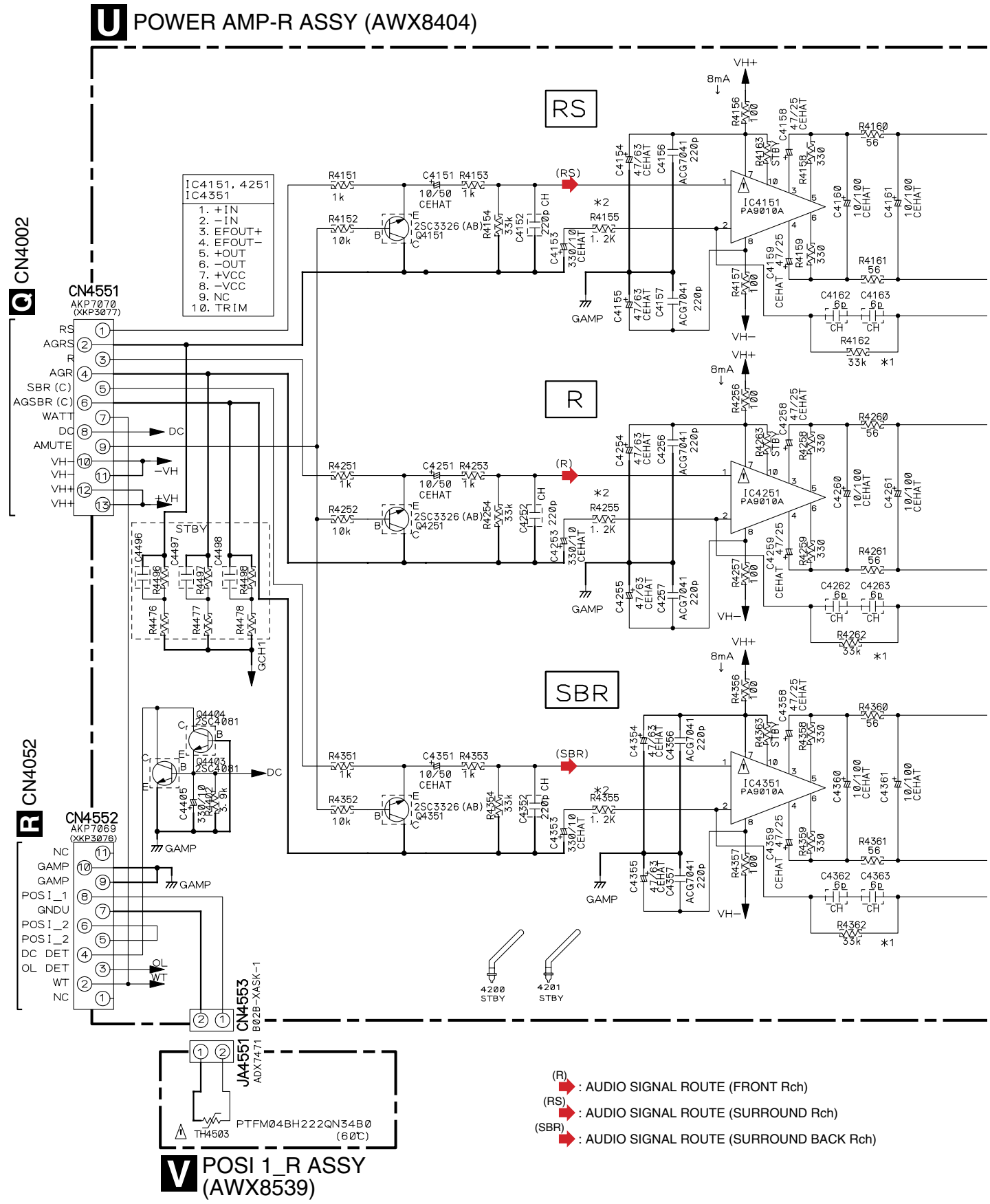

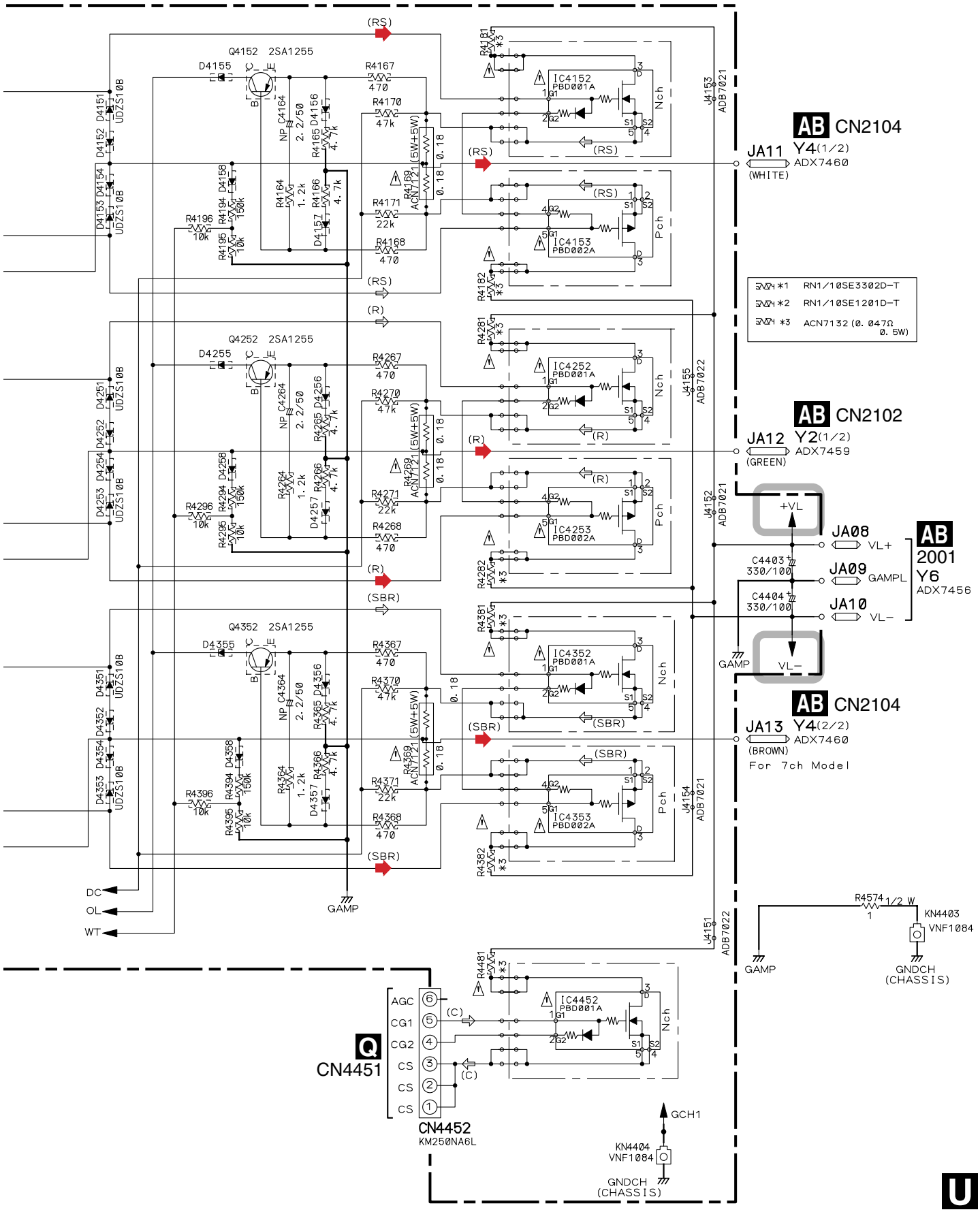

AB CN2104
JA11 Y4(1/2)
ADX7460
(WHITE)
AB CN2102
JA12 Y2(1/2)
ADX7459
(GREEN)
AB 2001 Y6
ADX7456
JA08 VL+
JA09 GAMPL
JA10 VL−
AB CN2104
JA13 Y4(2/2)
ADX7460
(BROWN)
For 7ch Model
*1 RN1/10SE3302D-T
*2 RN1/10SE1201D-T
*3 ACN7132 (0.047Ω 0.5W)
Q4152 2SA1255
Q4252 2SA1255
Q4352 2SA1255
IC4152 PBD001A
IC4153 PBD002A
IC4252 PBD001A
IC4253 PBD002A
IC4352 PBD001A
IC4353 PBD002A
IC4452 PBD001A
Nch
Pch
J4153 ADB7021
J4155 ADB7022
J4152 ADB7021
J4154 ADB7021
J4151 ADB7022
(RS)
(R)
(SBR)
(C)
GAMP
DC
OL
WT
Q CN4451
AGC
CG1
CG2
CS
CS
CS
CN4452
KM250NA6L
GCH1
KN4404
VNF1084
GNDCH (CHASSIS)
R4574 1/2 W
KN4403
VNF1084
GNDCH (CHASSIS)
+VL
VL−
C4403 330/100
C4404 330/100

3.19 REGULATOR ASSY

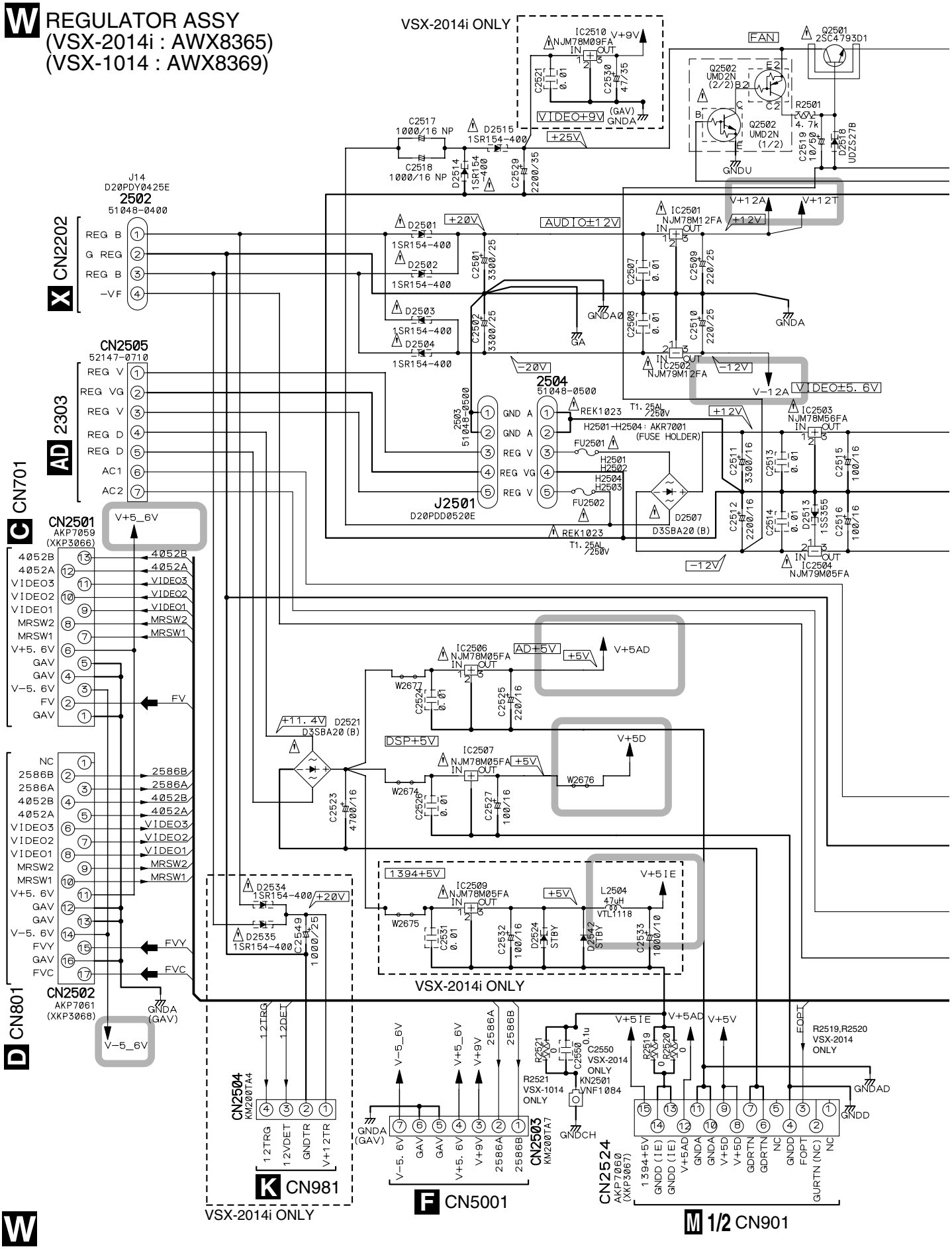

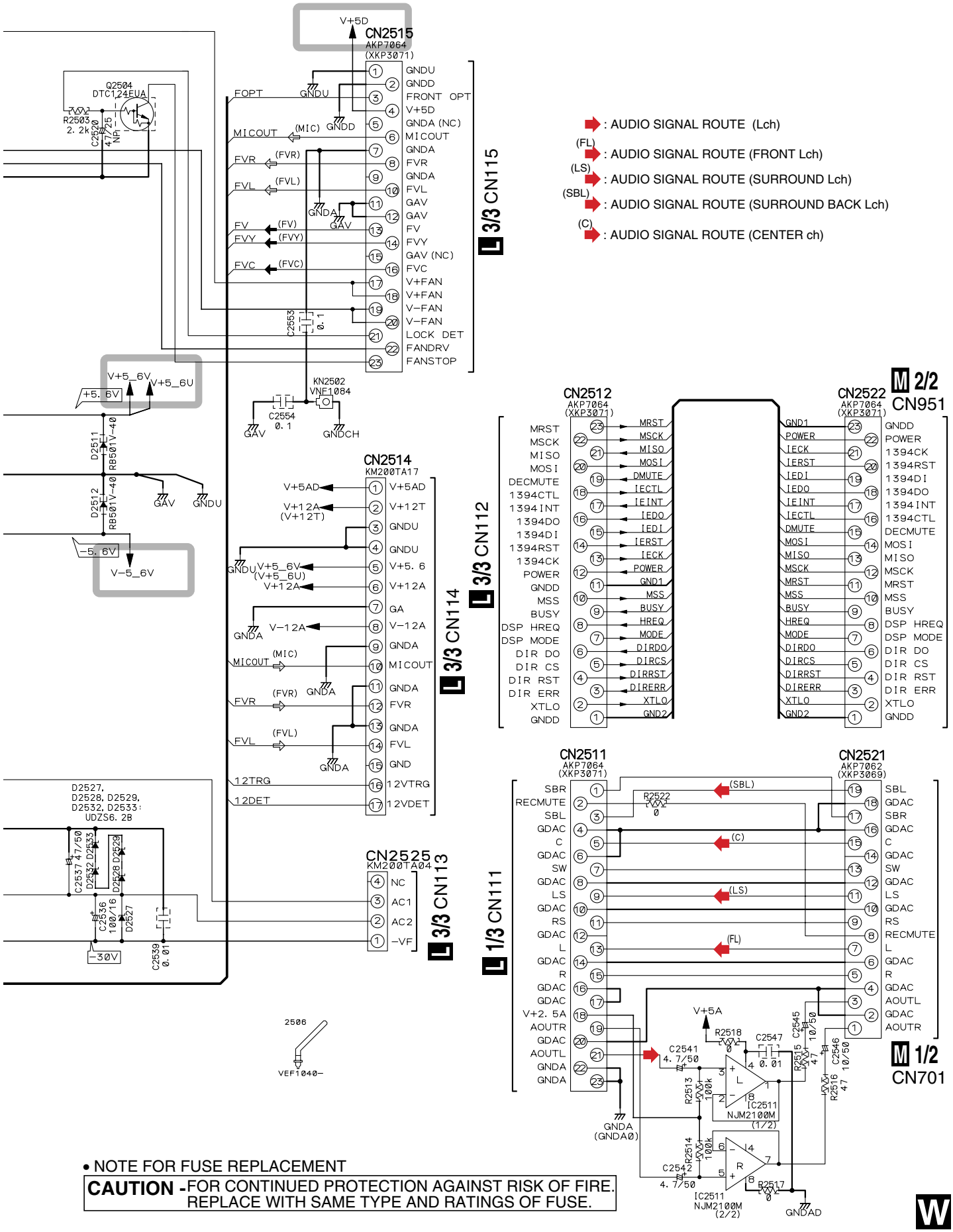
: AUDIO SIGNAL ROUTE (Lch)
(FL) : AUDIO SIGNAL ROUTE (FRONT Lch)
(LS) : AUDIO SIGNAL ROUTE (SURROUND Lch)
(SBL) : AUDIO SIGNAL ROUTE (SURROUND BACK Lch)
(C) : AUDIO SIGNAL ROUTE (CENTER ch)
CN2515
AKP7064
(XKP3071)
L 3/3 CN115
CN2514
KM200TA17
L 3/3 CN114
CN2525
KM200TA04
L 3/3 CN113
CN2512
AKP7064
(XKP3071)
L 3/3 CN112
CN2522
AKP7064
(XKP3071)
M 2/2
CN951
CN2511
AKP7064
(XKP3071)
L 1/3 CN111
CN2521
AKP7062
(XKP3069)
M 1/2
CN701
Q2504
DTC124EUA
R2503
2.2k
C2520
47/25
NP
V+5D
FOPT
GNDU
MICOUT
(MIC)
GNDD
FVR
(FVR)
FVL
(FVL)
GNDA
GAV
FV
(FV)
FVY
(FVY)
FVC
(FVC)
C2553
0.1
V+5_6V
V+5_6U
+5.6V
D2511
RB501V-40
D2512
RB501V-40
GAV
GNDU
-5.6V
V-5_6V
KN2502
VNF1084
C2554
0.1
GAV
GNDCH
D2527,
D2528, D2529,
D2532, D2533:
UDZS6.2B
C2537 47/50
C2536
100/16
D2527
C2539
0.01
-30V
2506
VEF1040-
GNDU
GNDD
FRONT OPT
V+5D
GNDA (NC)
MICOUT
GNDA
FVR
GNDA
FVL
GAV
GAV
FV
FVY
GAV (NC)
FVC
V+FAN
V+FAN
V-FAN
V-FAN
LOCK DET
FANDRV
FANSTOP
V+5AD
V+12T
(V+12T)
GNDU
GNDU
V+5_6V
(V+5_6U)
V+5. 6
V+12A
GA
V-12A
GNDA
V-12A
GNDA
(MIC)
MICOUT
GNDA
FVR
(FVR)
GNDA
FVL
(FVL)
GNDA
GND
12TRG
12VTRG
12DET
12VDET
NC
AC1
AC2
-VF
MRST
MSCK
MISO
MOSI
DECMUTE
1394CTL
1394INT
1394DO
1394DI
1394RST
1394CK
POWER
GNDD
MSS
BUSY
DSP HREQ
DSP MODE
DIR DO
DIR CS
DIR RST
DIR ERR
XTLO
GND2
GND1
POWER
IECK
IERST
IEDI
IEDO
IEINT
IECTL
DMUTE
MOSI
MISO
MSCK
MRST
MSS
BUSY
HREQ
MODE
DIRDO
DIRCS
DIRRST
DIRERR
XTLO
GND2
GNDD
POWER
1394CK
1394RST
1394DI
1394DO
1394INT
1394CTL
DECMUTE
MOSI
MISO
MSCK
MRST
MSS
BUSY
DSP HREQ
DSP MODE
DIR DO
DIR CS
DIR RST
DIR ERR
XTLO
GNDD
SBR
RECMUTE
SBL
GDAC
C
GDAC
SW
GDAC
LS
GDAC
RS
GDAC
L
GDAC
R
GDAC
GDAC
V+2.5A
AOUTR
GDAC
AOUTL
GNDA
GNDA
R2522
0
(SBL)
(C)
(LS)
(FL)
SBL
GDAC
SBR
GDAC
C
GDAC
SW
GDAC
LS
GDAC
RS
RECMUTE
L
GDAC
R
GDAC
AOUTL
GDAC
AOUTR
V+5A
R2518
0
C2547
0.01
C2545
10/50
R2515
47
C2546
10/50
R2516
47
C2541
4.7/50
R2513
100k
IC2511
NJM2100M
(1/2)
GNDA
(GNDA0)
R2514
100k
C2542
4.7/50
IC2511
NJM2100M
(2/2)
R2517
0
GNDAD
• NOTE FOR FUSE REPLACEMENT
CAUTION -FOR CONTINUED PROTECTION AGAINST RISK OF FIRE.
REPLACE WITH SAME TYPE AND RATINGS OF FUSE.

3.20 TRANS 2-1, TRANS 2-2, DIODE, VH TR and SP/PS ASSYS

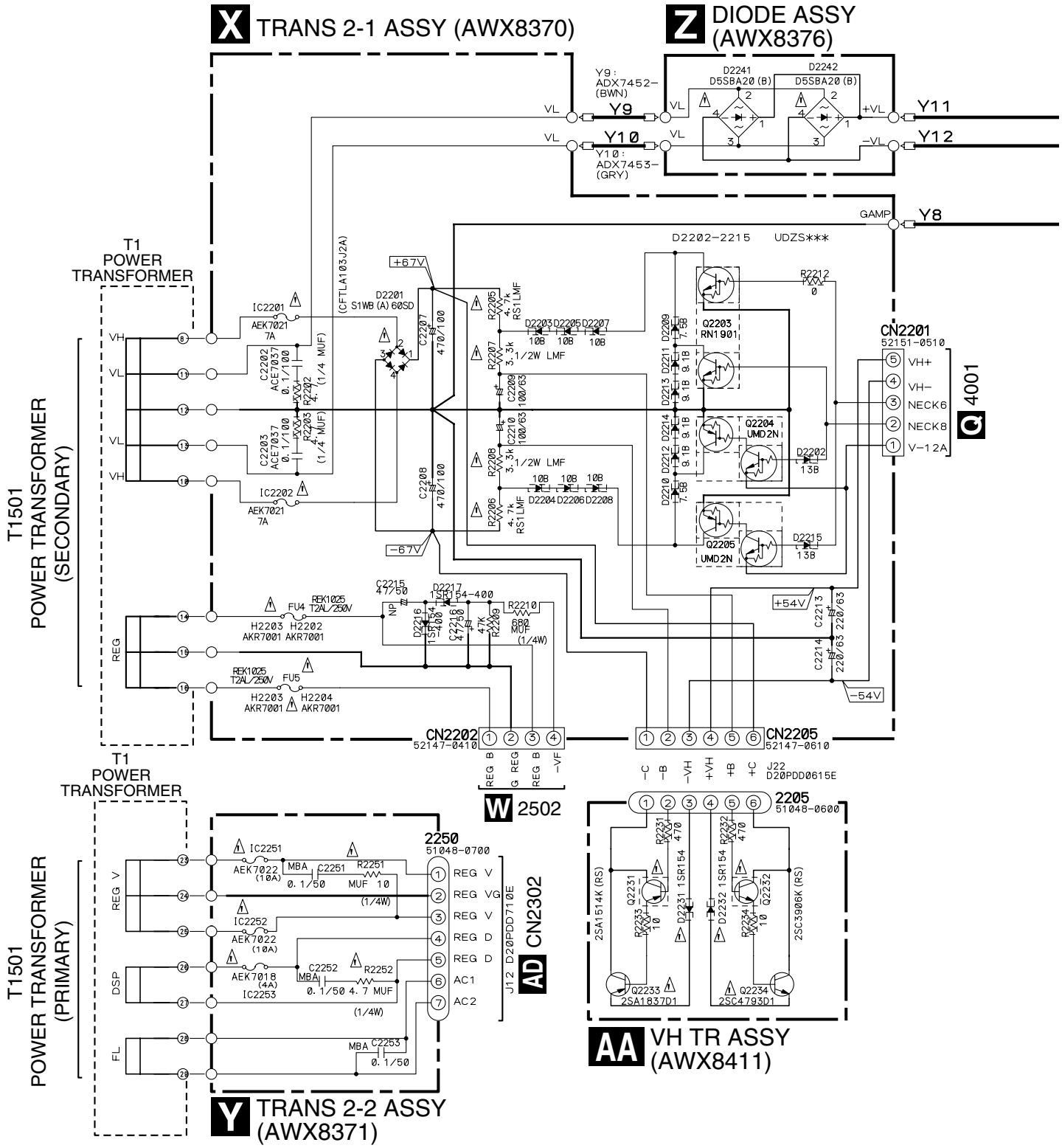

• NOTE FOR FUSE REPLACEMENT

CAUTION - FOR CONTINUED PROTECTION AGAINST RISK OF FIRE. REPLACE WITH SAME TYPE AND RATINGS OF FUSE.

X Y Z AA

AB SP/PS ASSY (VSX-2014i : AWX8402)
SP/PS ASSY (VSX-1014 : AWX8375)

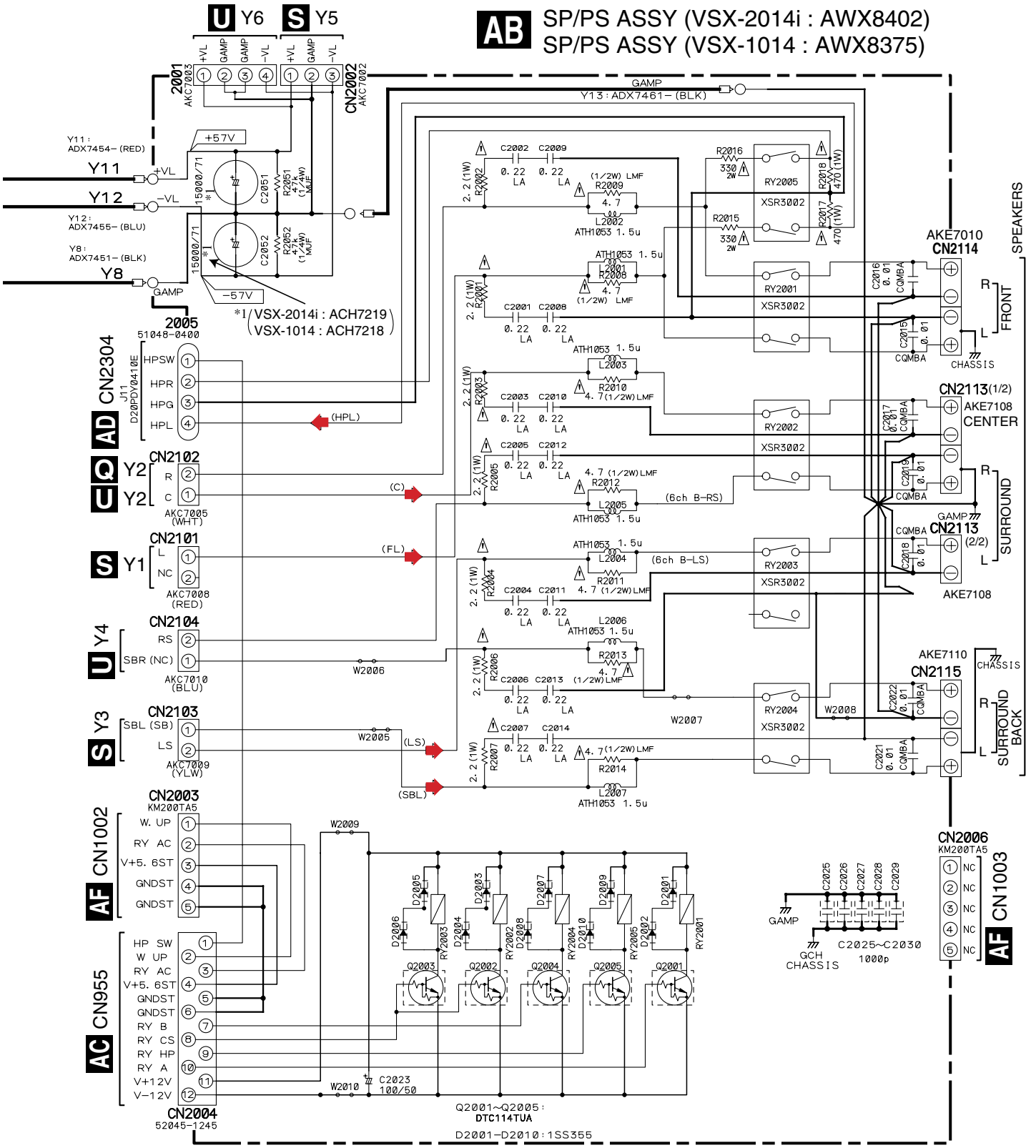

(FL) : AUDIO SIGNAL ROUTE (FRONT Lch)
(LS) : AUDIO SIGNAL ROUTE (SURROUND Lch)
(SBL) : AUDIO SIGNAL ROUTE (SURROUND BACK Lch)
(C) : AUDIO SIGNAL ROUTE (CENTER ch)
(HPL) : AUDIO SIGNAL ROUTE (PHONES Lch)

AB

3.21 REAR TOP, TRANS SIDE, TRANS 1 and PRIMARY ASSYS

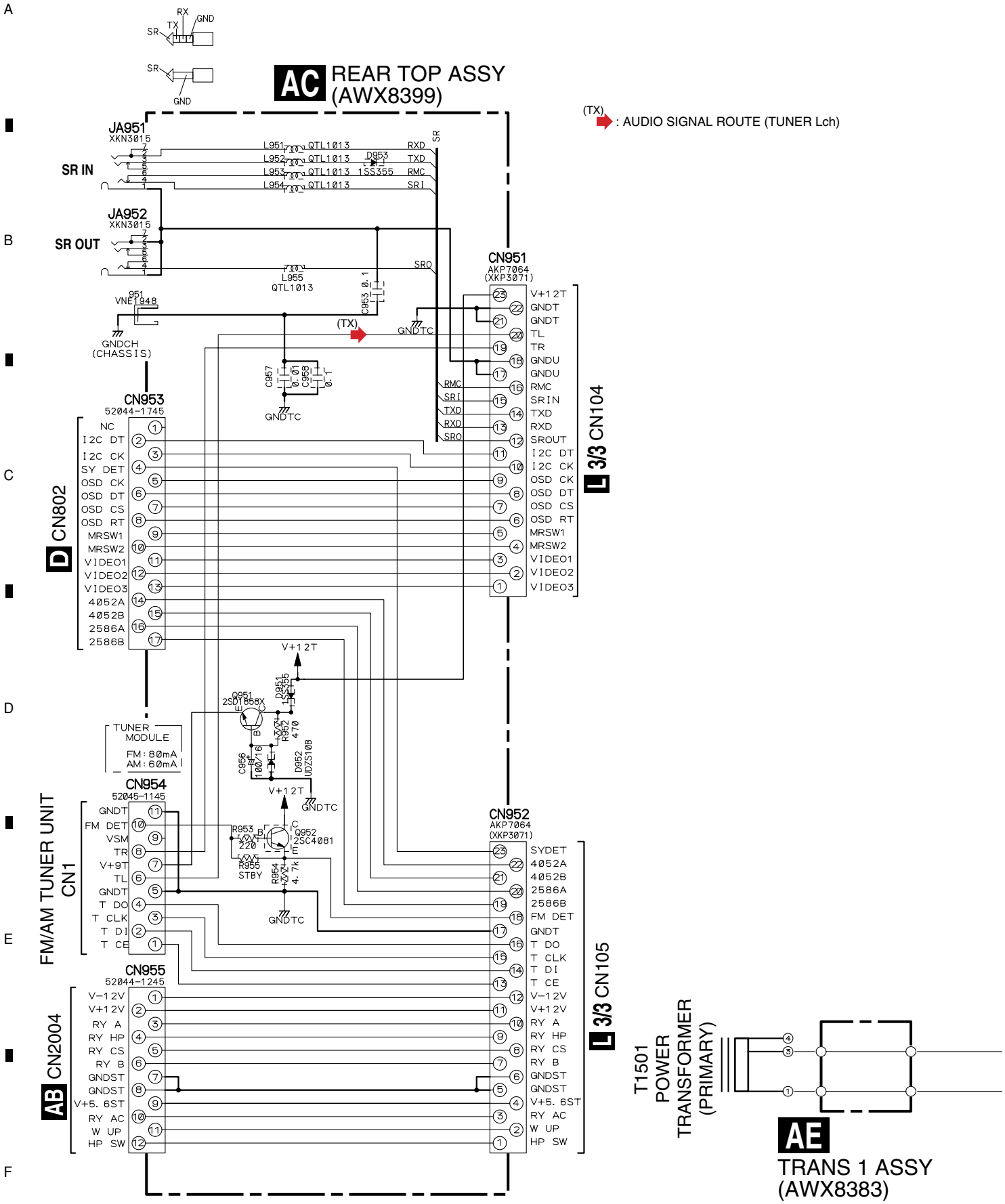

AD TRANS SIDE ASSY (AWX8417)

(HPL) : AUDIO SIGNAL ROUTE (PHONES Lch)

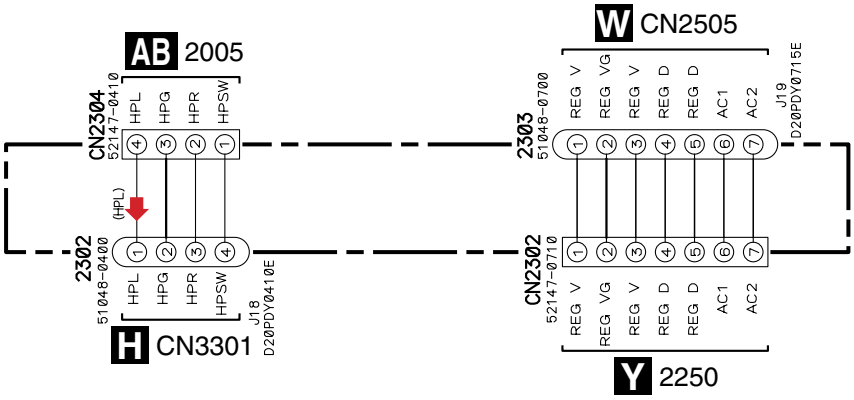

• NOTE FOR FUSE REPLACEMENT

CAUTION -FOR CONTINUED PROTECTION AGAINST RISK OF FIRE. REPLACE WITH SAME TYPE AND RATINGS OF FUSE.

AF PRIMARY ASSY (AWX8386)

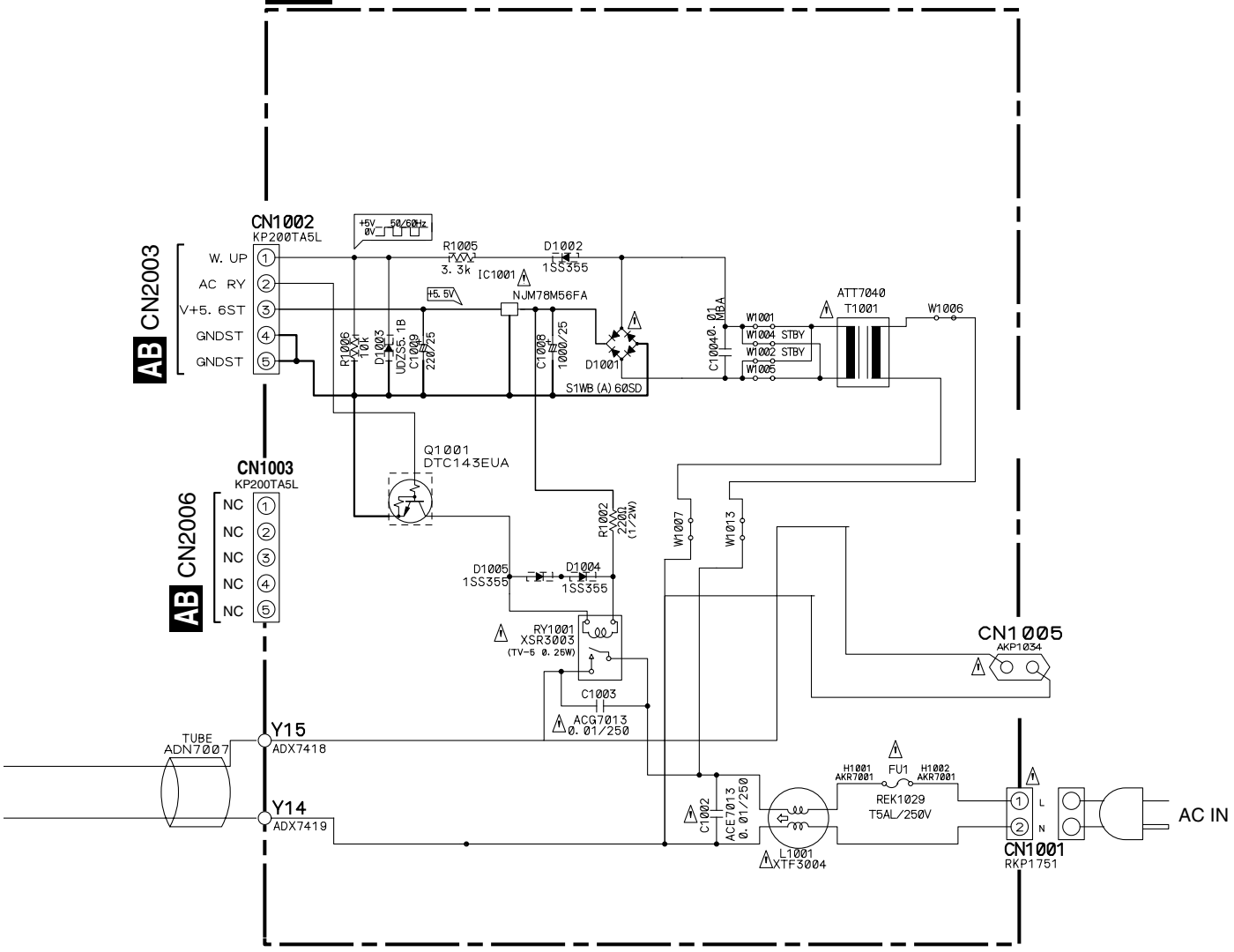

AD AF

4. PCB CONNECTION DIAGRAM

NOTE FOR PCB DIAGRAMS :

1. Part numbers in PCB diagrams match those in the schematic diagrams.
2. A comparison between the main parts of PCB and schematic diagrams is shown below.

Symbol In PCB Diagrams	Symbol In Schematic Diagrams	Part Name
	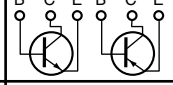	Transistor
	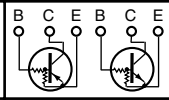	Transistor with resistor
	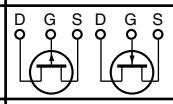	Field effect transistor
	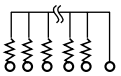	Resistor array
		3-terminal regulator

3. The parts mounted on this PCB include all necessary parts for several destinations.
   For further information for respective destinations, be sure to check with the schematic diagram.
4. View point of PCB diagrams.

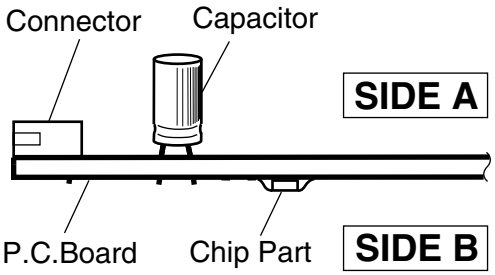

4.1 MULTI CH I/O ASSY

SIDE A

SIDE A

A MULTI CH I/O ASSY

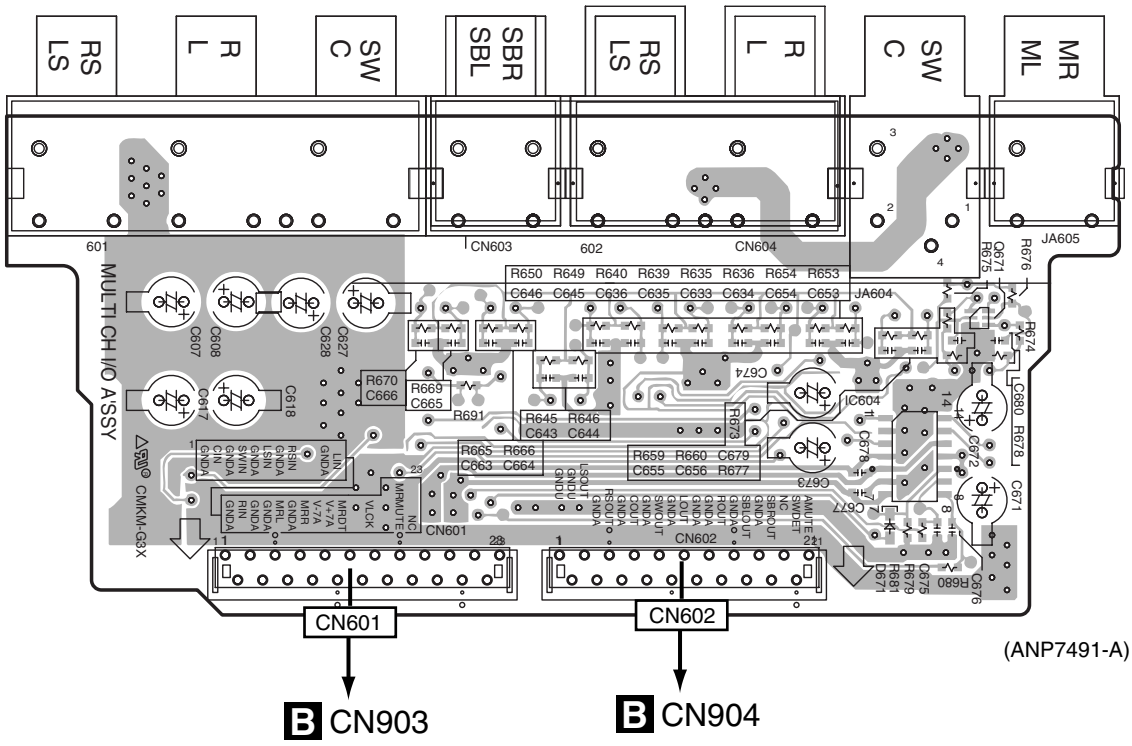

(ANP7491-A)

SIDE B

A MULTI CH I/O ASSY

SIDE B

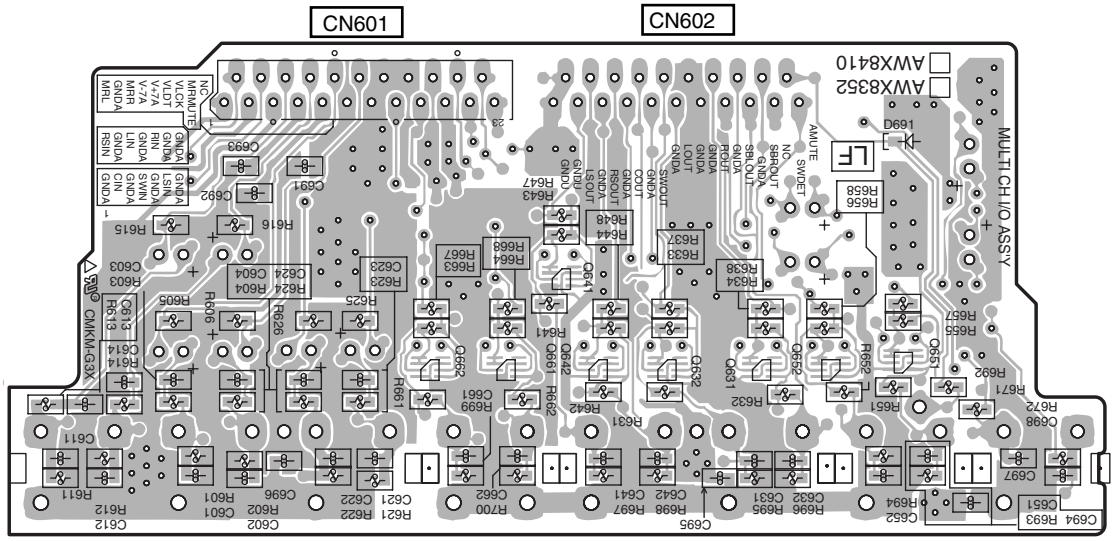

(ANP7491-A)

Q662 Q661 Q632 Q631 Q651
Q641 Q642 Q652

A **A**

4.2 AUDIO CONNECT ASSY

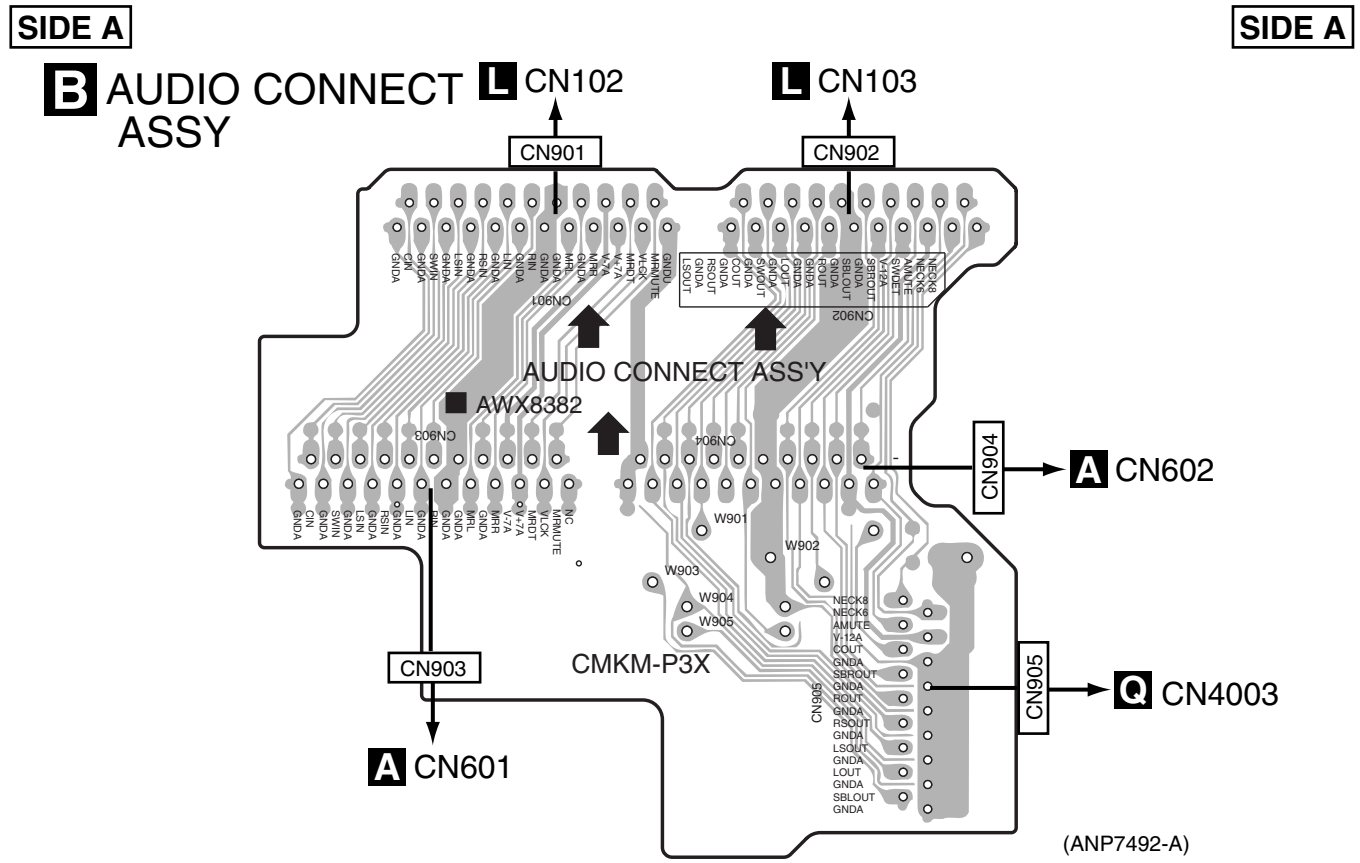

B AUDIO CONNECT ASSY

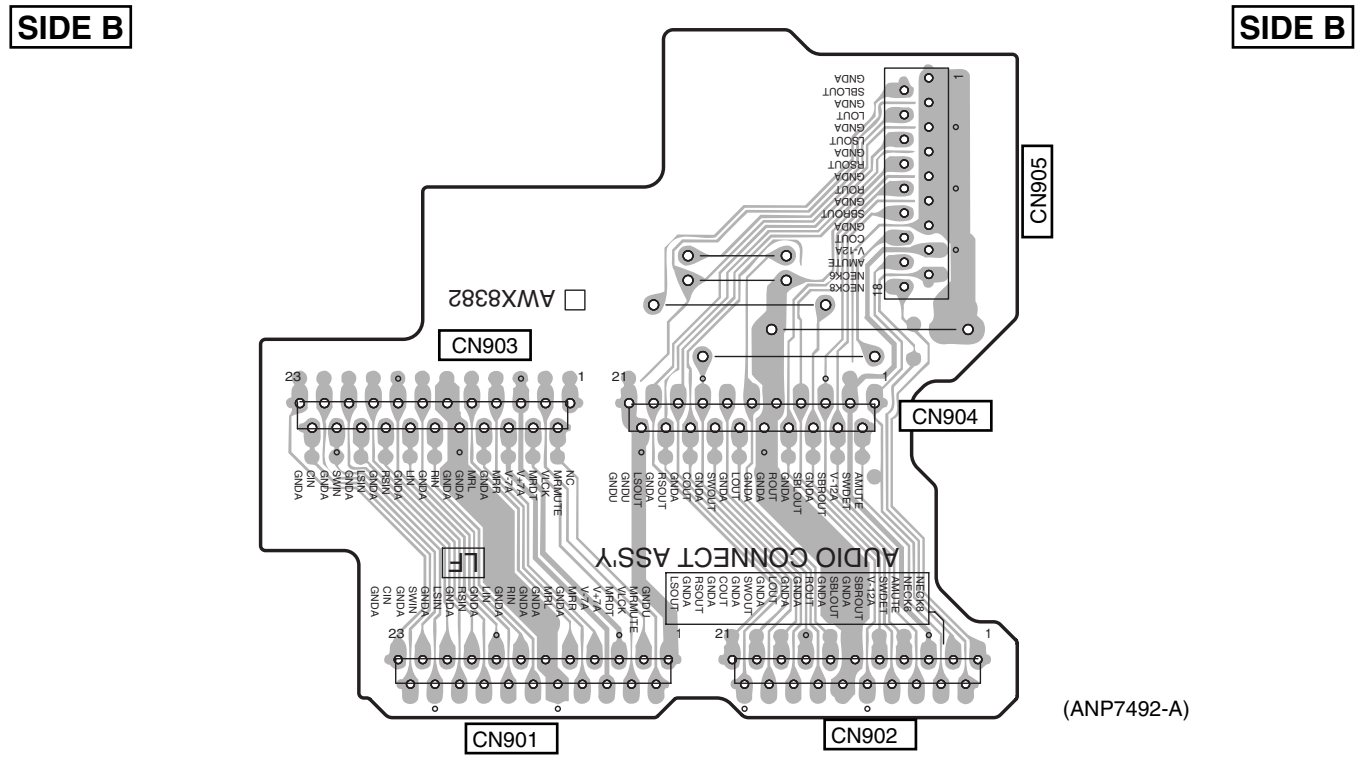

4.3 COMPOSITE V ASSY

SIDE A

C COMPOSITE V ASSY

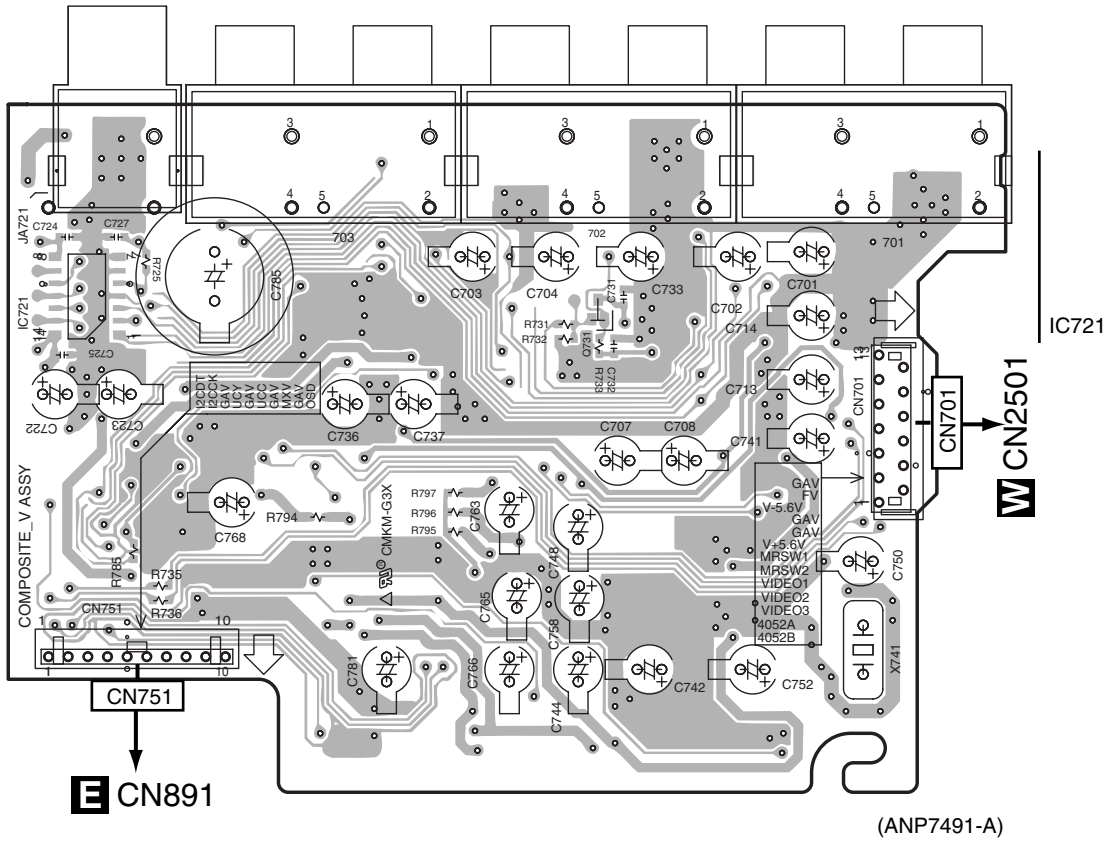

(ANP7491-A)

SIDE B

C COMPOSITE V ASSY

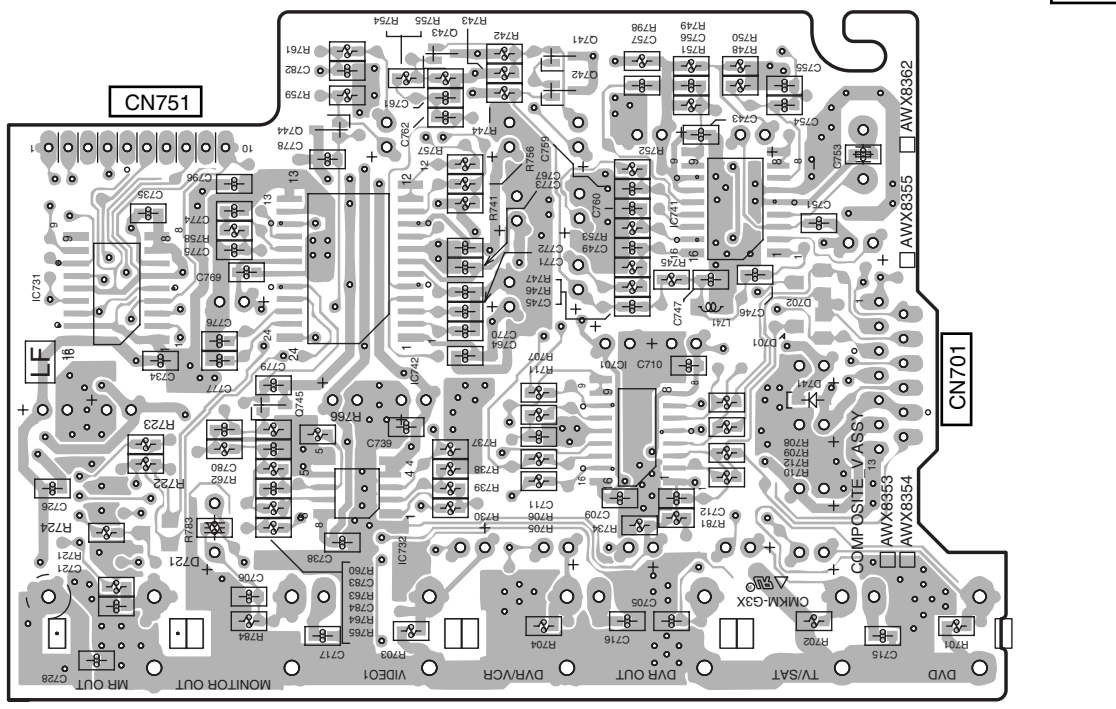

(ANP7491-A)

IC731 IC742 IC732 Q743 Q741 IC701 IC741
Q745 Q742

4.4 S VIDEO ASSY

SIDE A

SIDE A

D S VIDEO ASSY

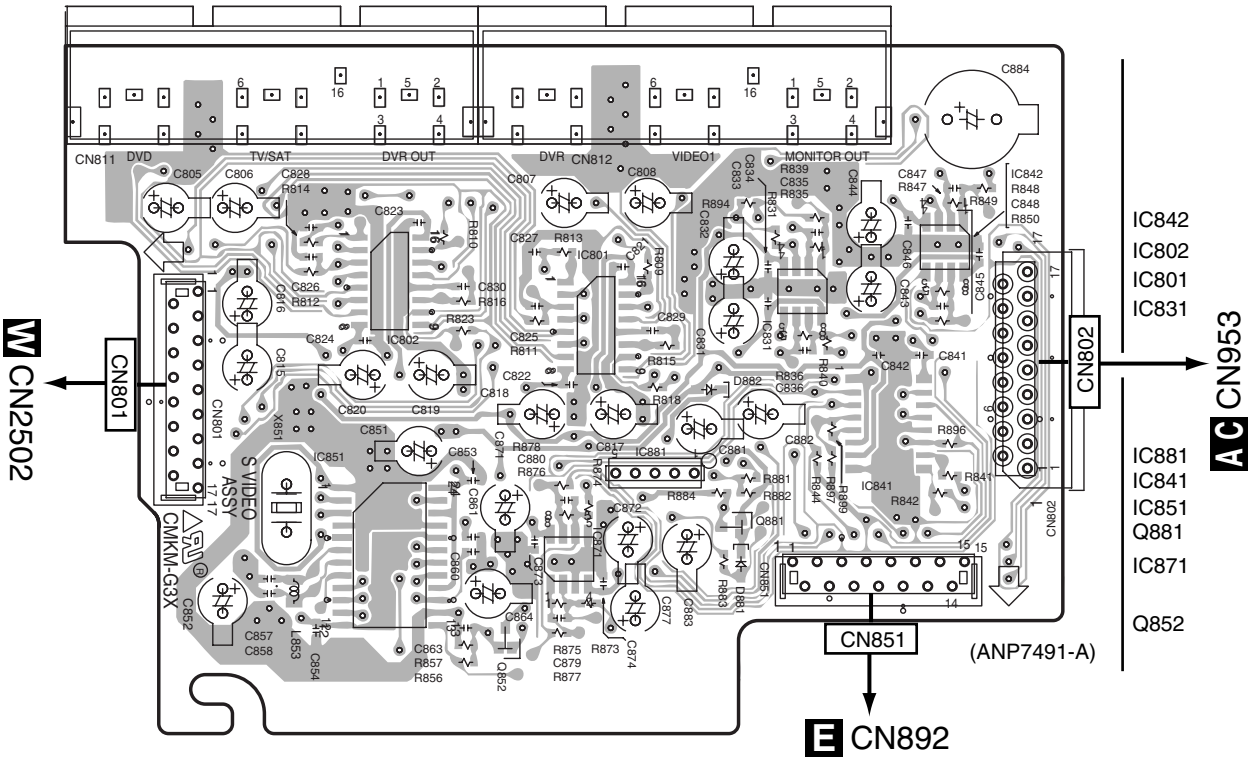

D S VIDEO ASSY

SIDE B

SIDE B

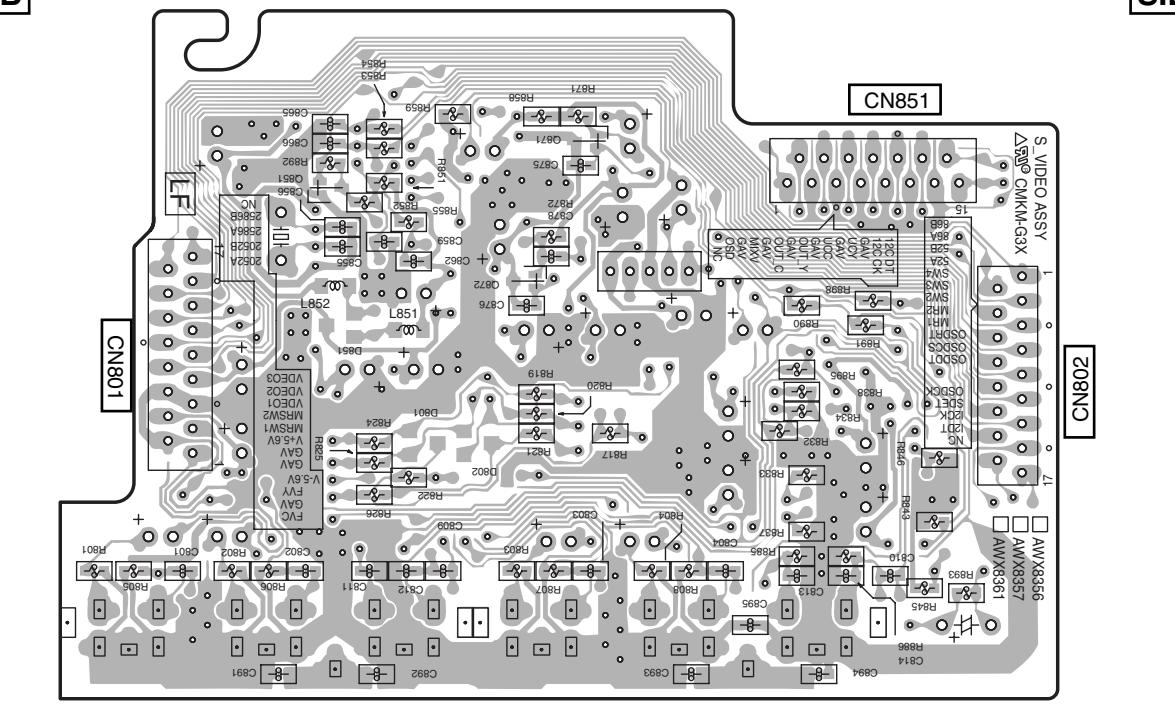

D D

4.5 VIDEO SIDE and OPTICAL-IN ASSYS

SIDE A

SIDE A

E VIDEO SIDE ASSY

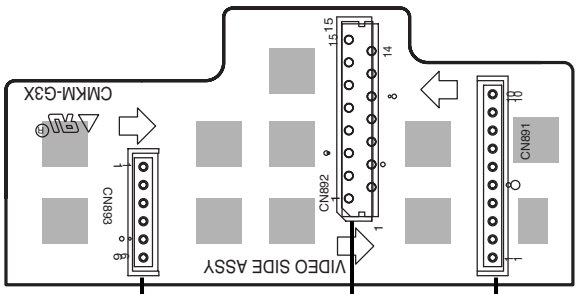

(ANP7491-A)

G OPTICAL-IN ASSY

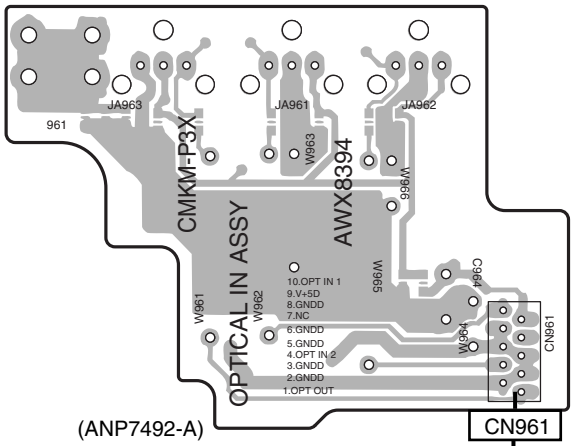

(ANP7492-A)

CN961

M CN601

SIDE B

SIDE B

E VIDEO SIDE ASSY

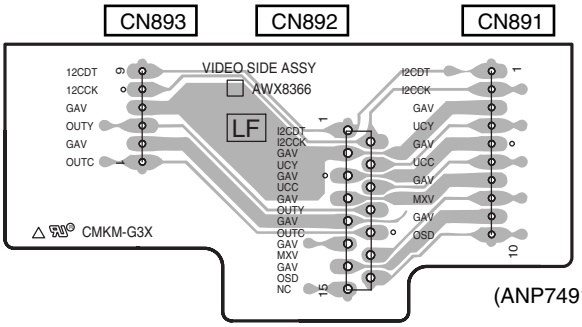

(ANP7491-A)

G OPTICAL-IN ASSY

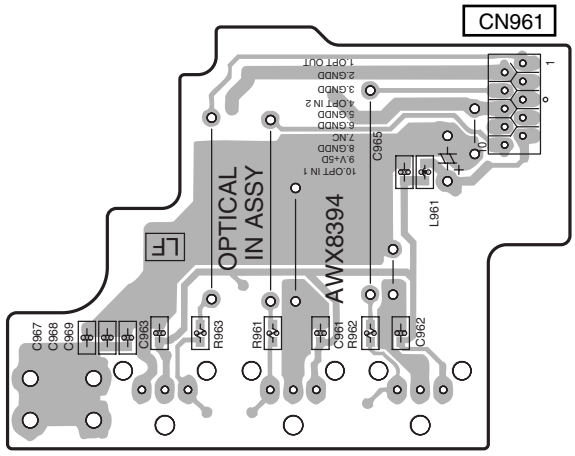

(ANP7492-A)

E G

E G

4.6 COMPONENT ASSY

SIDE A **SIDE A**

F COMPONENT ASSY

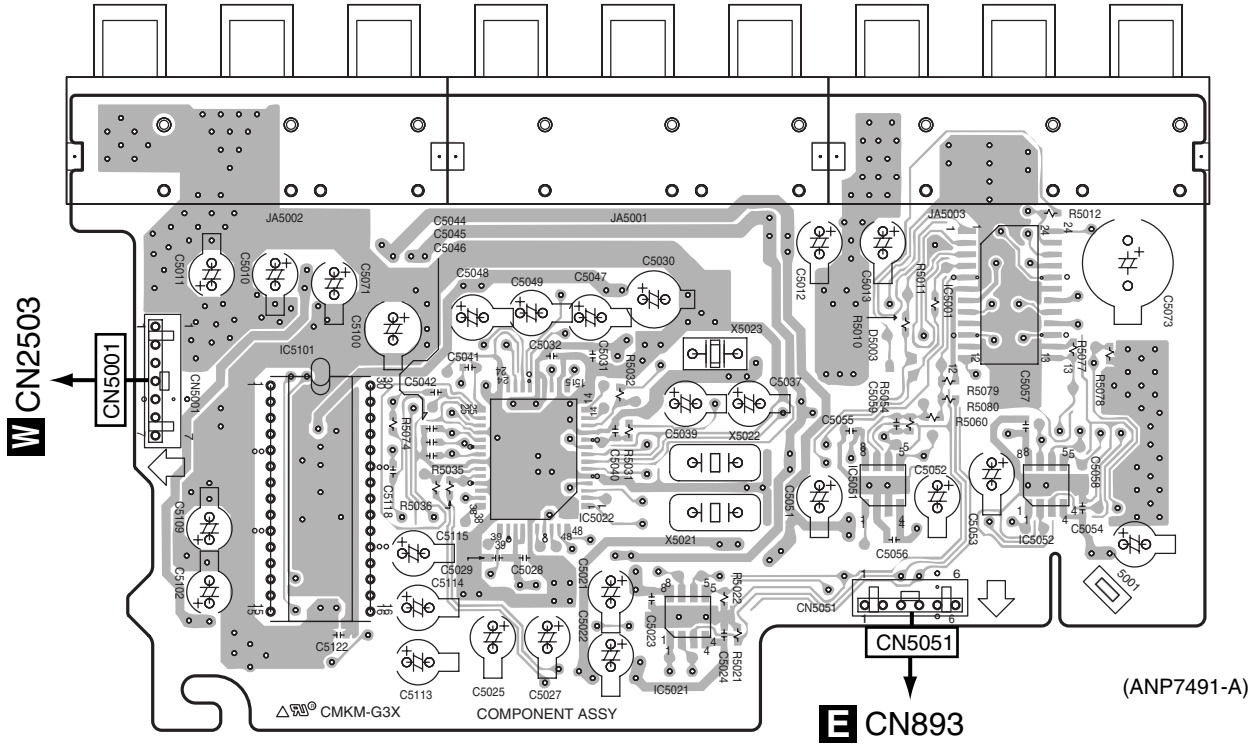

IC5101 IC5022 IC5021 IC5051 IC5001 IC5052

SIDE B **SIDE B**

F COMPONENT ASSY

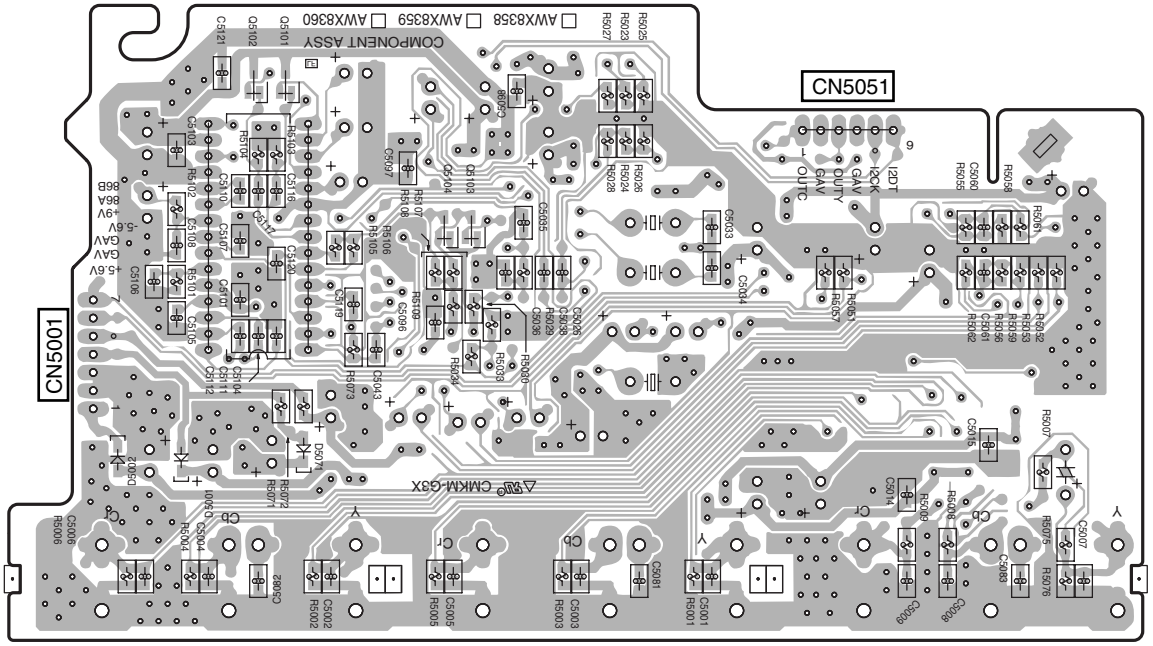

Q5102 Q5101 Q5104 Q5103

F **F**

4.7 FRONT IN and FRONT-IN CONNECT ASSYS

SIDE A

SIDE A

I FRONT IN ASSY

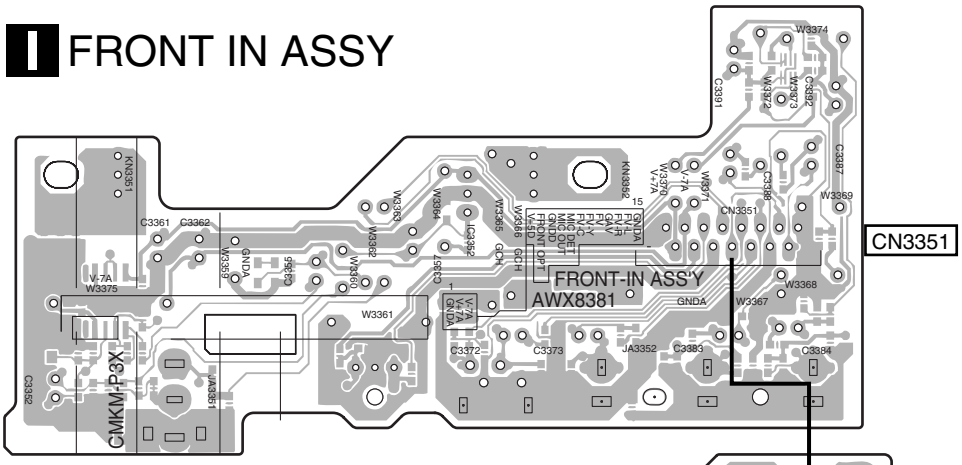

(ANP7492-A)

J FRONT-IN CONNECT ASSY

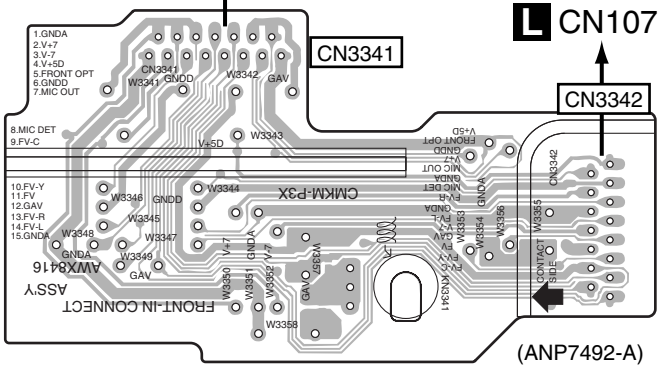

(ANP7492-A)

SIDE B **I** FRONT IN ASSY

SIDE B

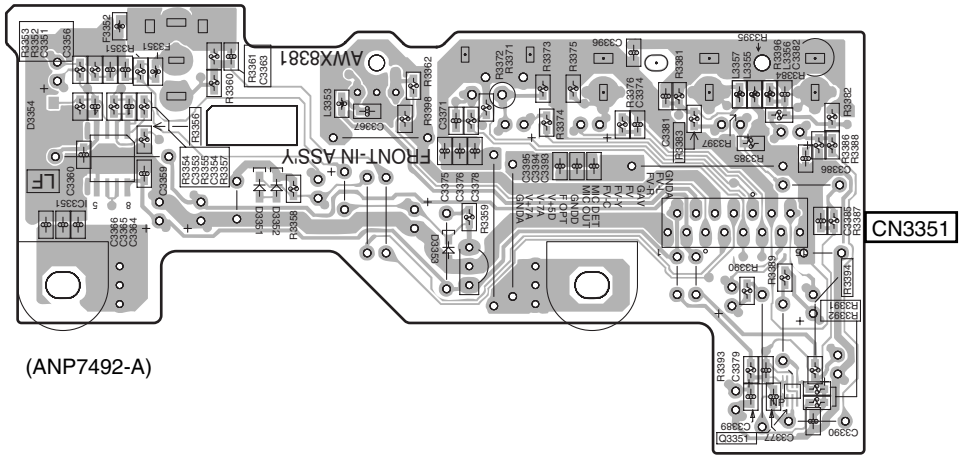

(ANP7492-A)

J FRONT-IN CONNECT ASSY

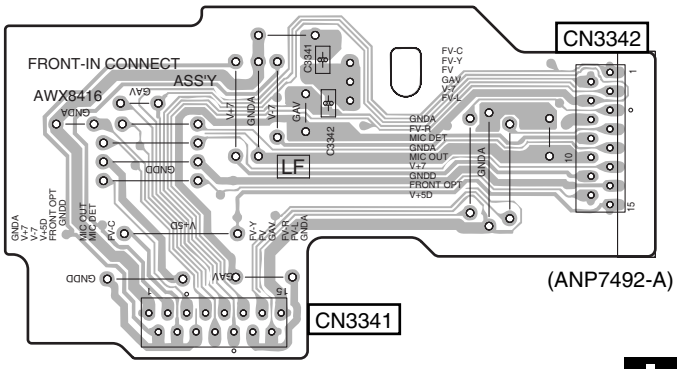

(ANP7492-A)

I **J** **I** **J**

4.8 MAIN CONTROL ASSY

SIDE A

L MAIN CONTROL ASSY

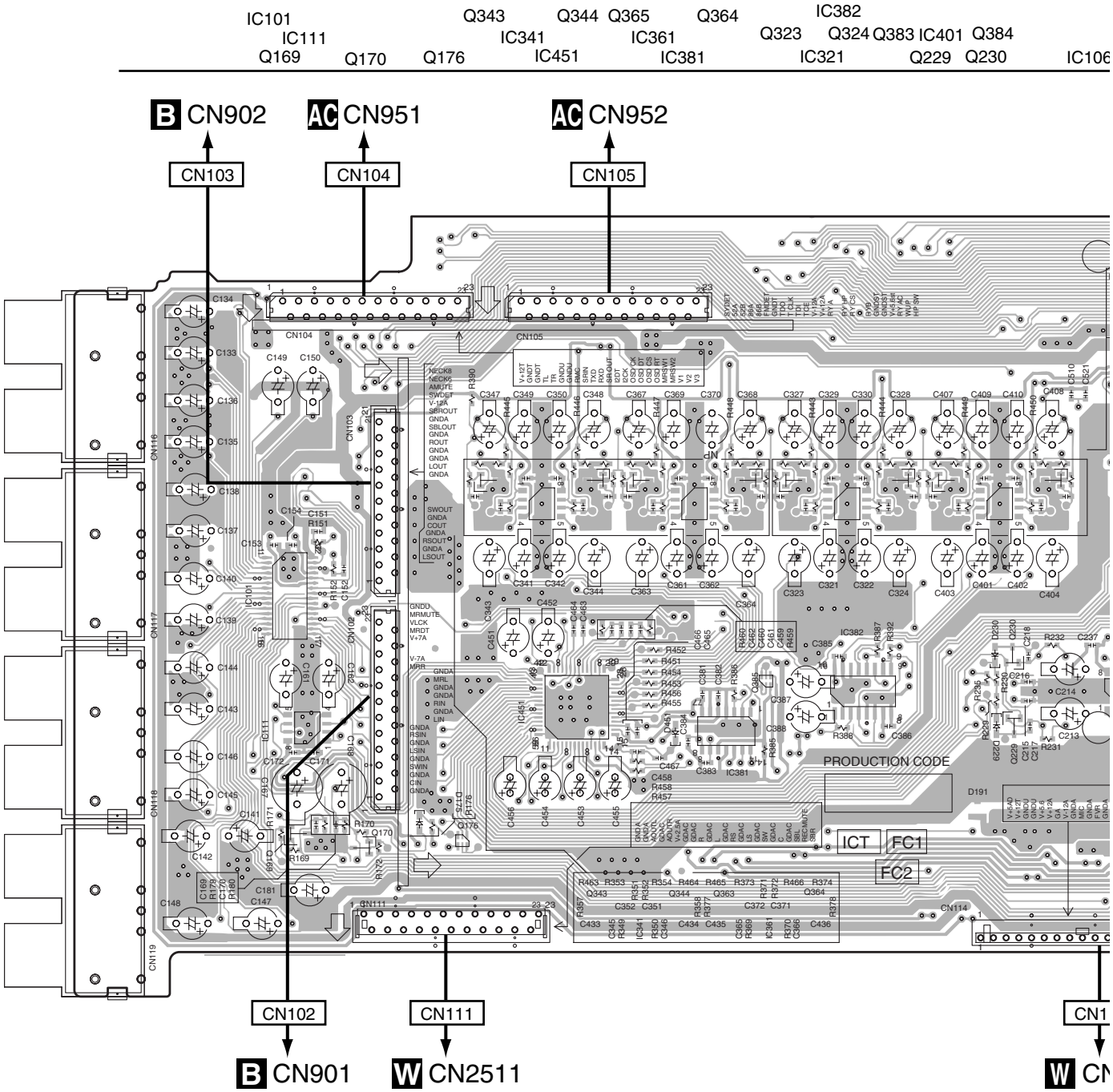

SIDE A

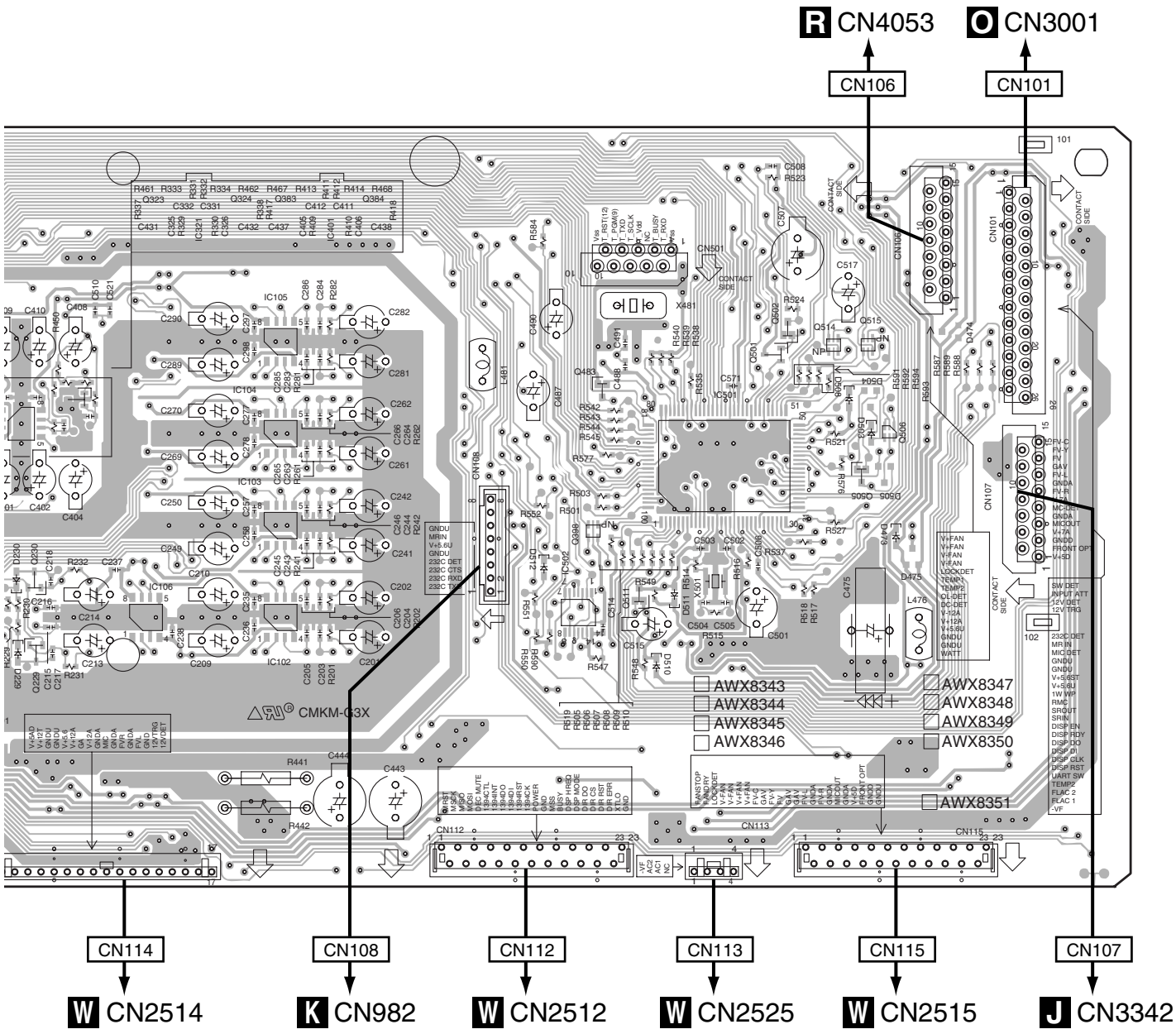

(ANP7491-A)

L

SIDE B

A

B

C

D

E

F

Q507 Q503 Q504 IC481 Q512 IC504 Q482 Q172 Q517 Q516 Q382

L MAIN CONTROL ASSY

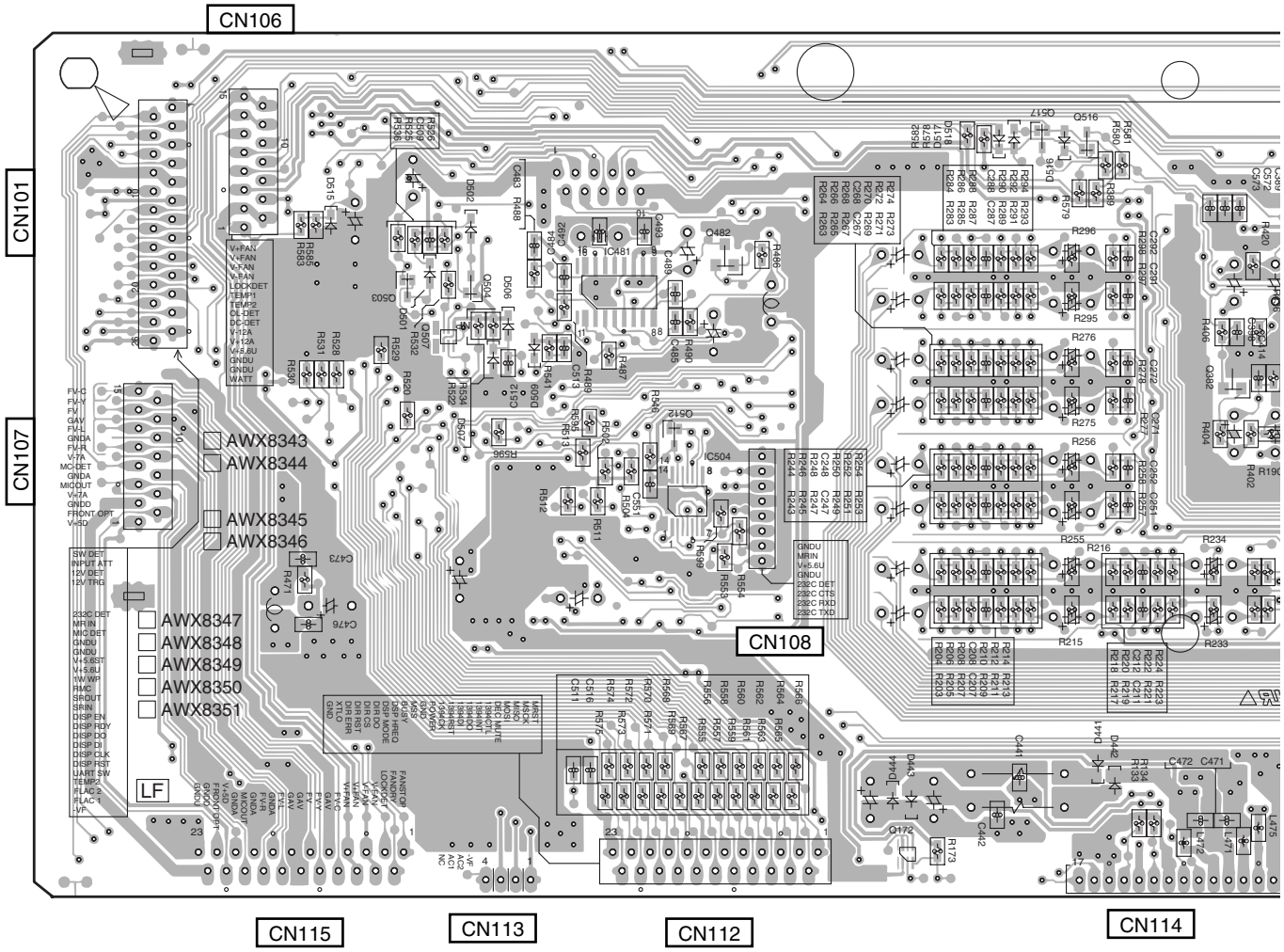

SIDE B

Q381 Q322
Q382 Q235 Q386 Q321 Q362 Q361 Q342 Q341 Q175

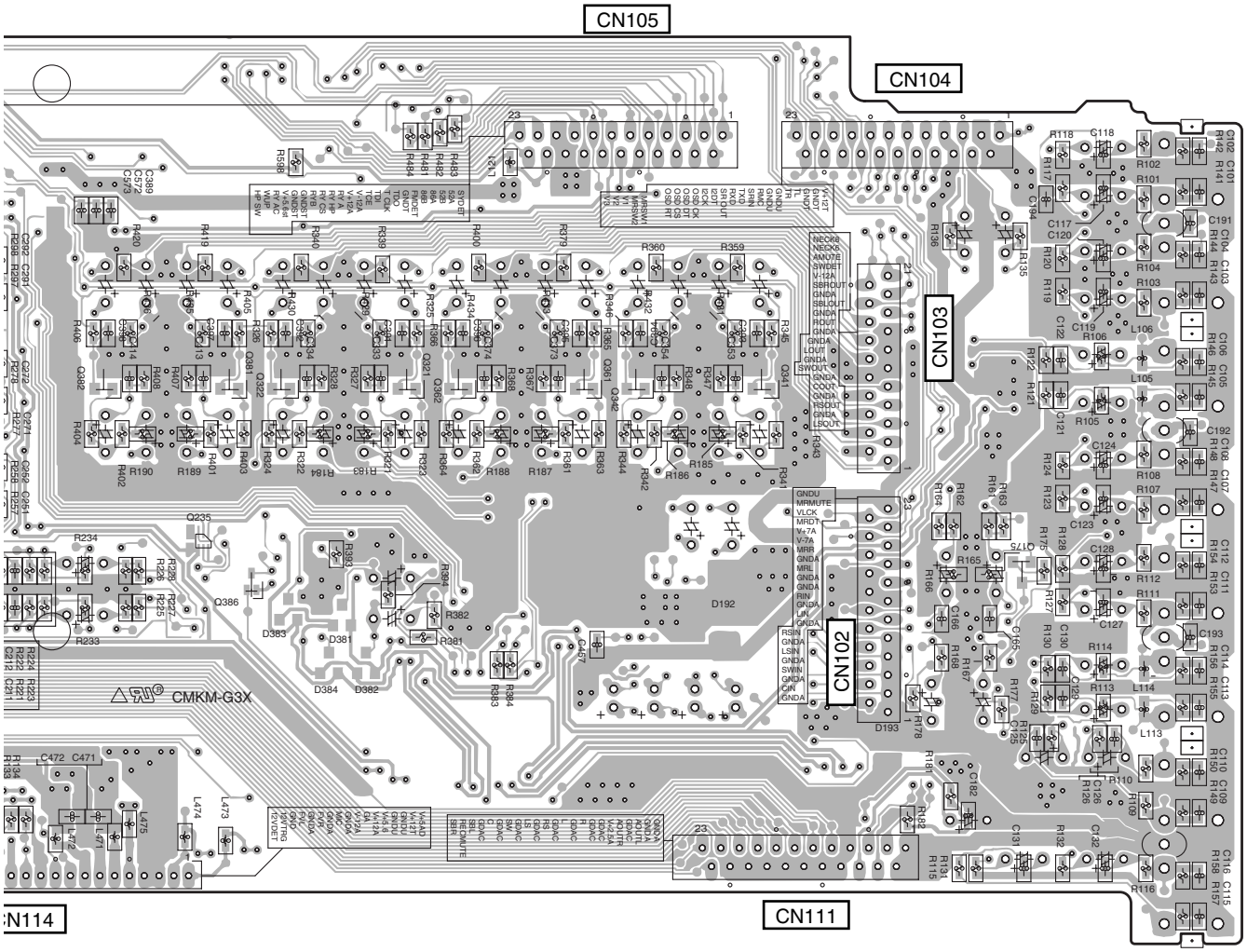

(ANP7491-A)

4.9 DISPLAY ASSY

SIDE A

O DISPLAY ASSY

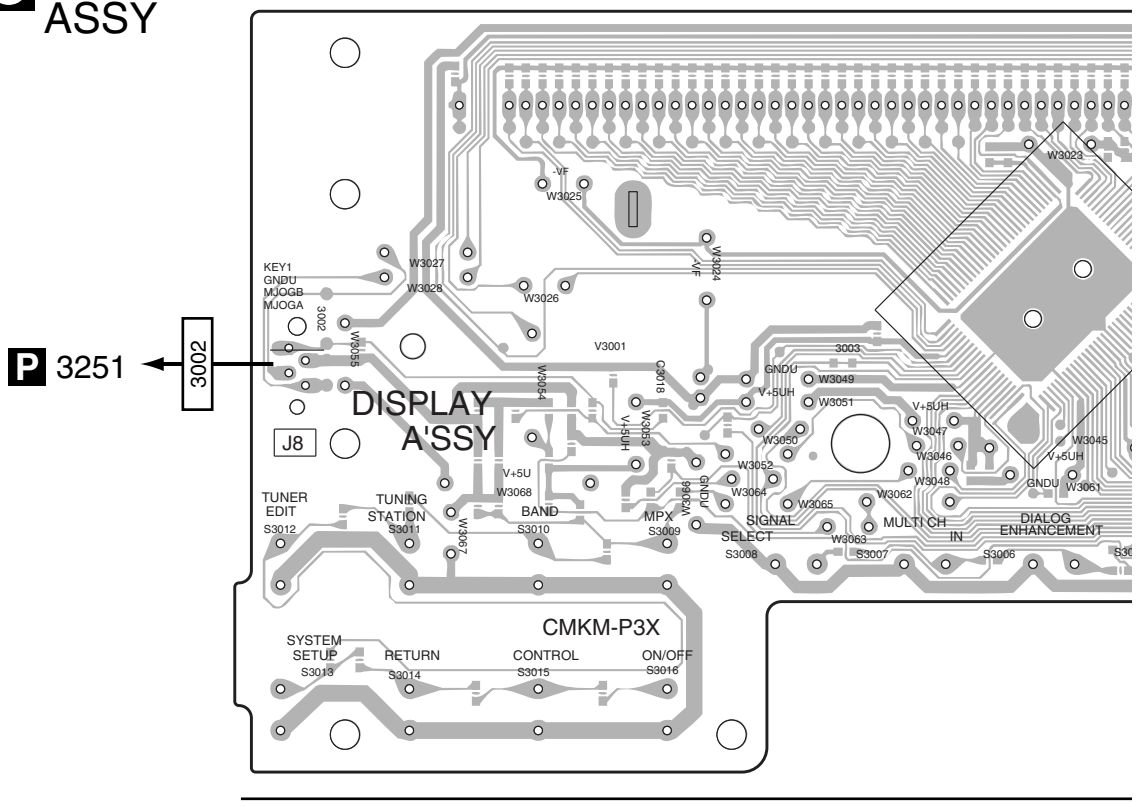

SIDE B

IC3001

O DISPLAY ASSY

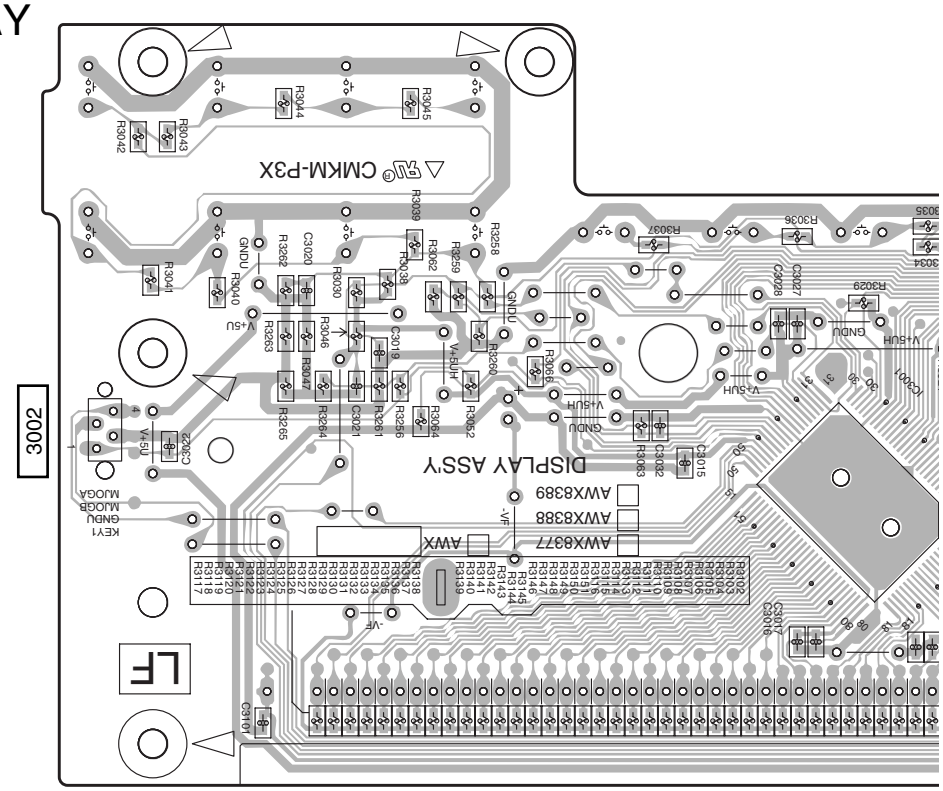

O

SIDE A

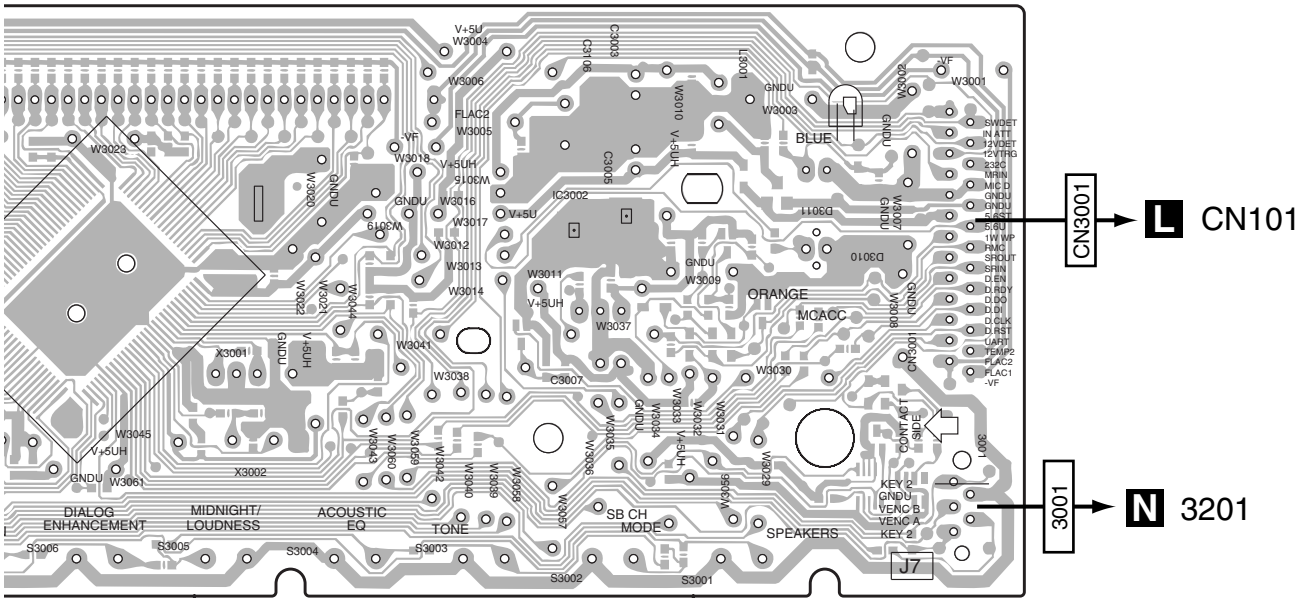

(ANP7492-A)

IC3002

IC3001 Q3005 Q3001 Q3002 IC3003 Q3003 Q3004

SIDE B

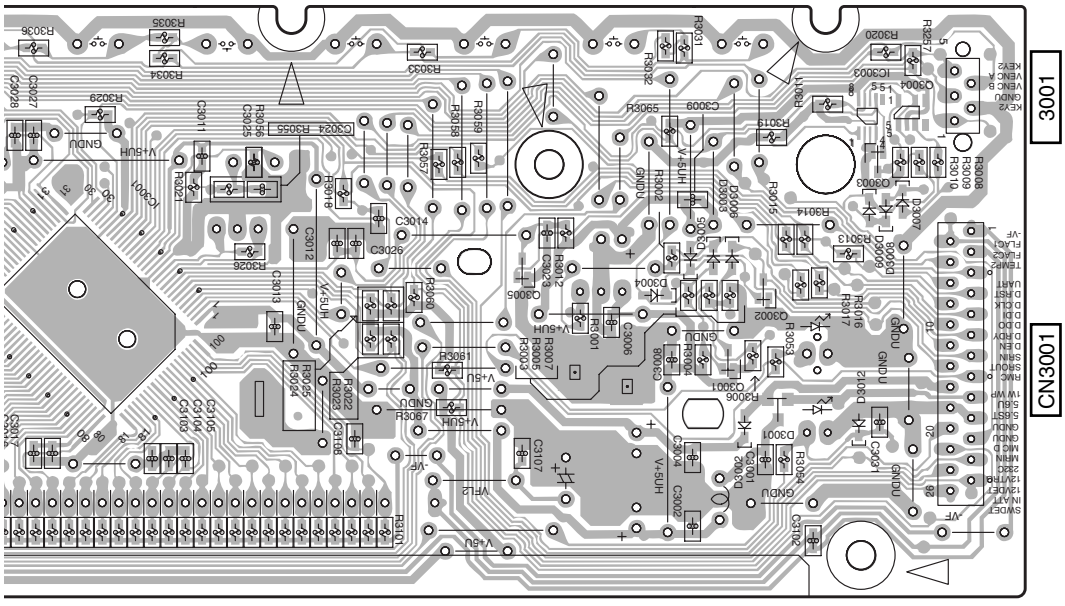

(ANP7492-A)

4.10 HEADPHONE, VOLUME and MULTI JOG ASSYS

SIDE A

SIDE A

N VOLUME ASSY

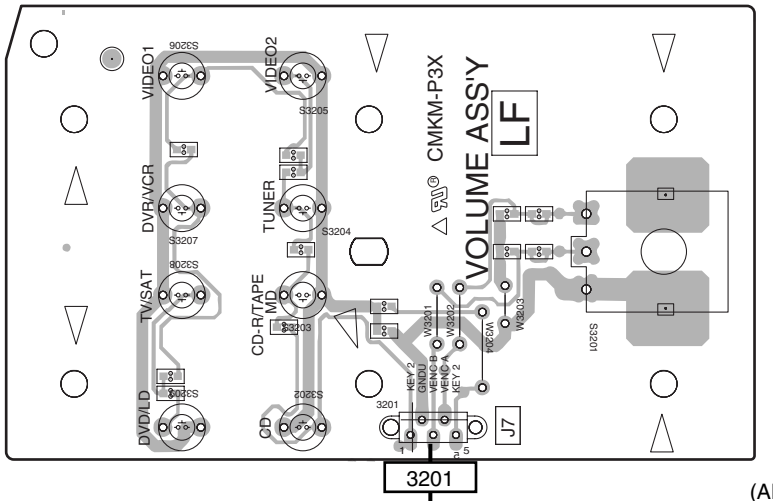

3201

(ANP7492-A)

O 3001

P MULTI JOG ASSY

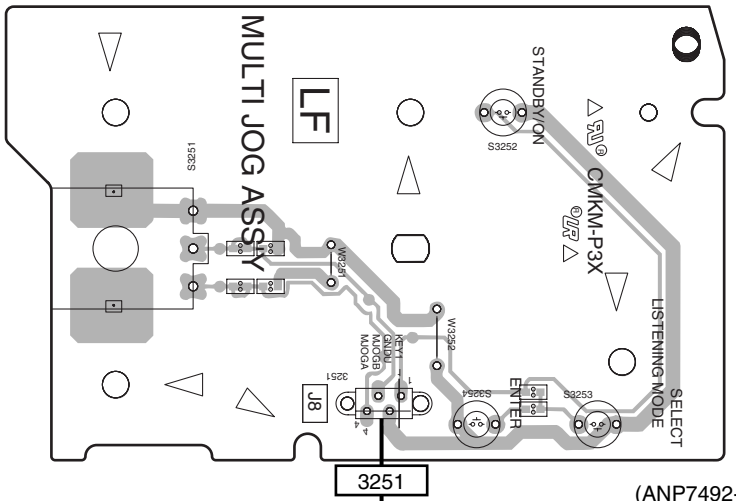

3251

(ANP7492-A)

O 3002

H HEADPHONE ASSY

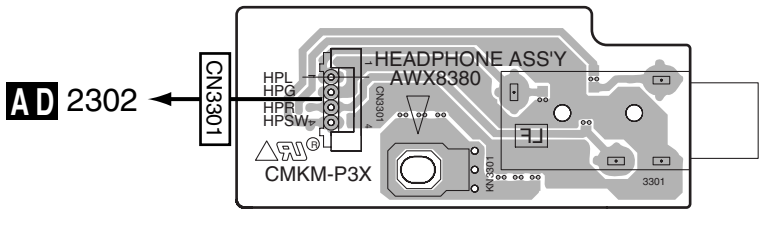

(ANP7492-A)

SIDE B

SIDE B

N VOLUME ASSY

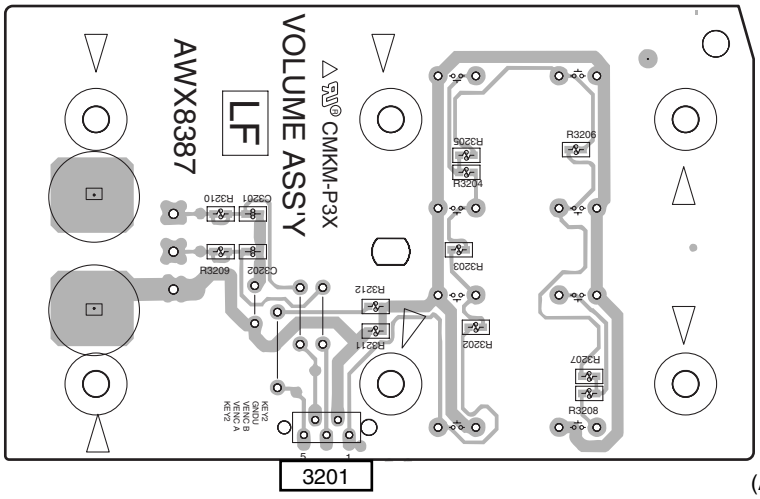

(ANP7492-A)

P MULTI JOG ASSY

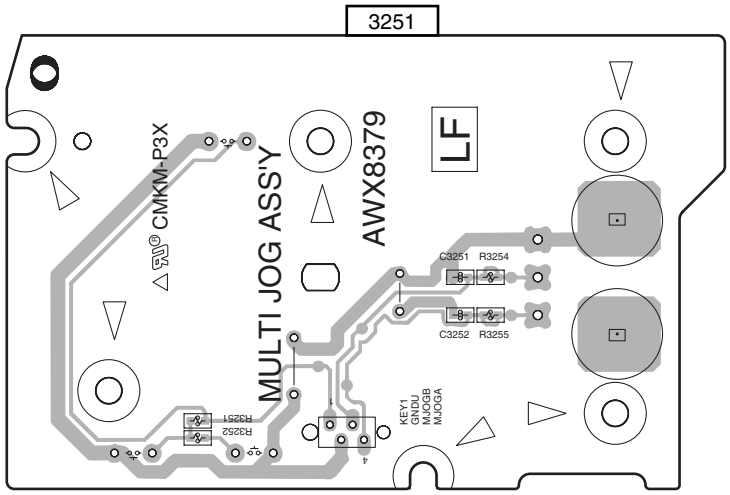

(ANP7492-A)

N HEADPHONE ASSY

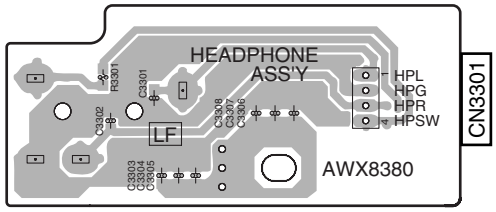

(ANP7492-A)

4.11 POWER AMP IN ASSY

SIDE A

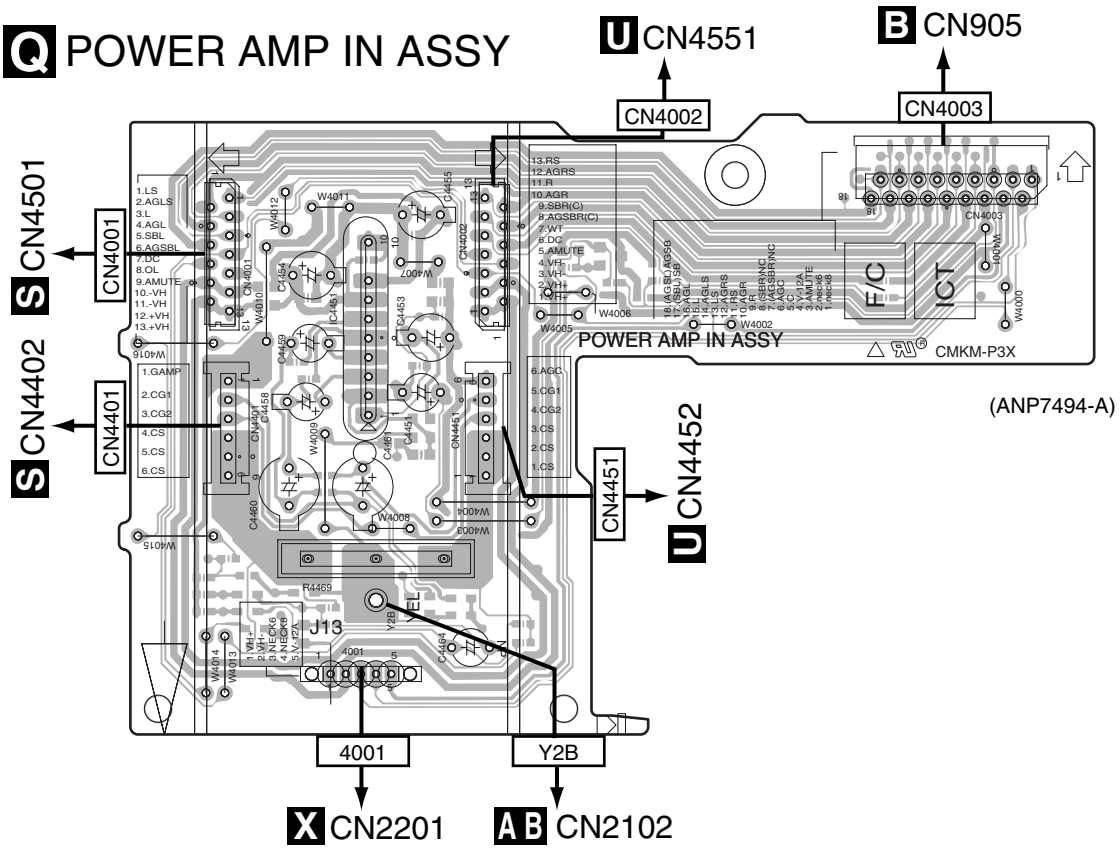

SIDE B

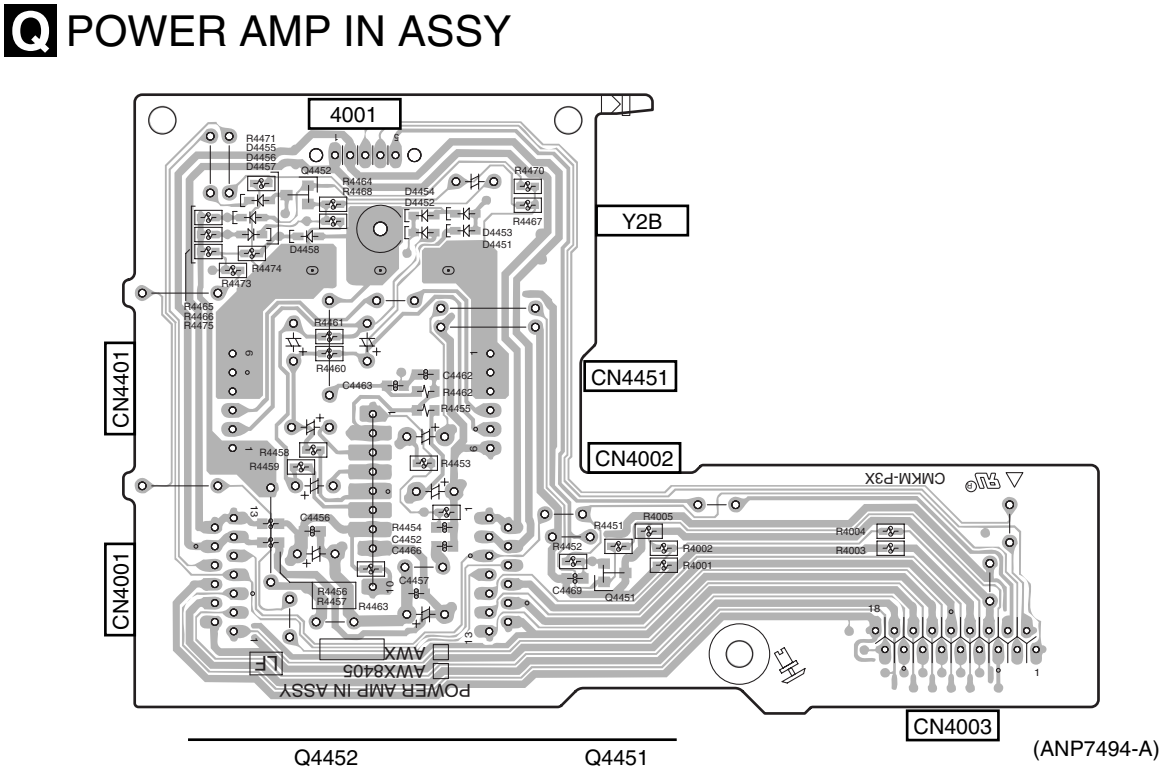

4.12 12V TRIGGER ASSY (VSX-2014i ONLY)

SIDE A **SIDE A**

- **For VSX-2014i Only**

K 12V TRIGGER ASSY

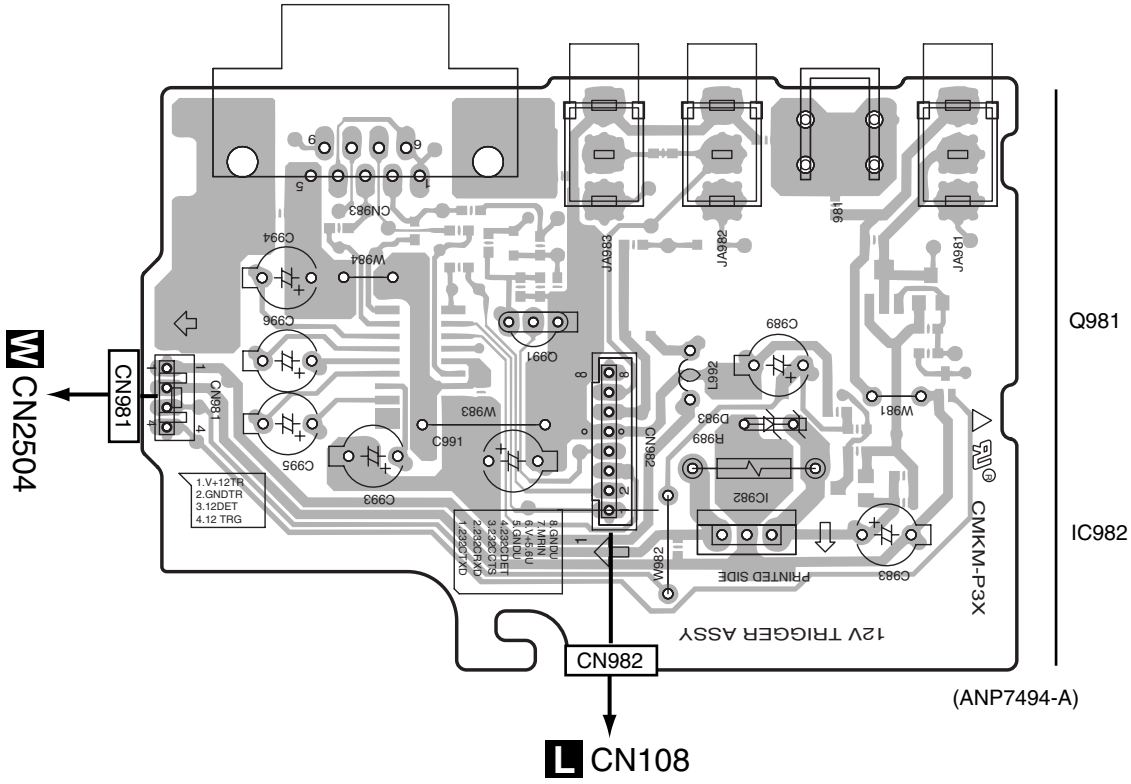

SIDE B **SIDE B**

K 12V TRIGGER ASSY

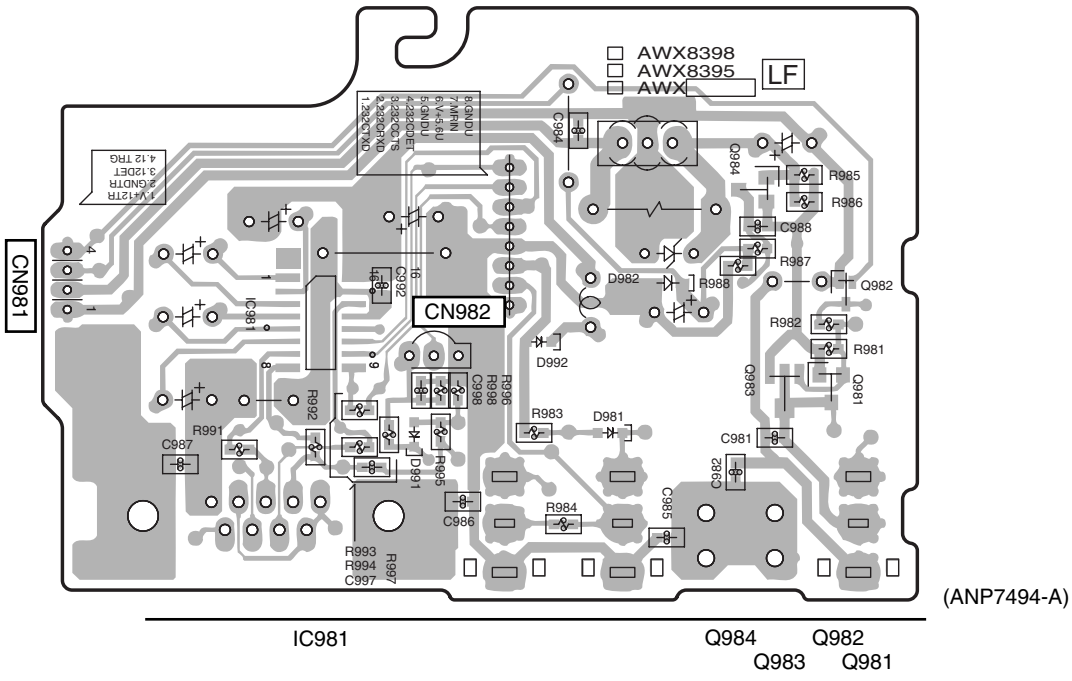

4.13 DSP ASSY

SIDE A

SIDE A

M DSP ASSY

- This diagram has four layers. In the two middle layers, mainy Vcc and GND are connected.

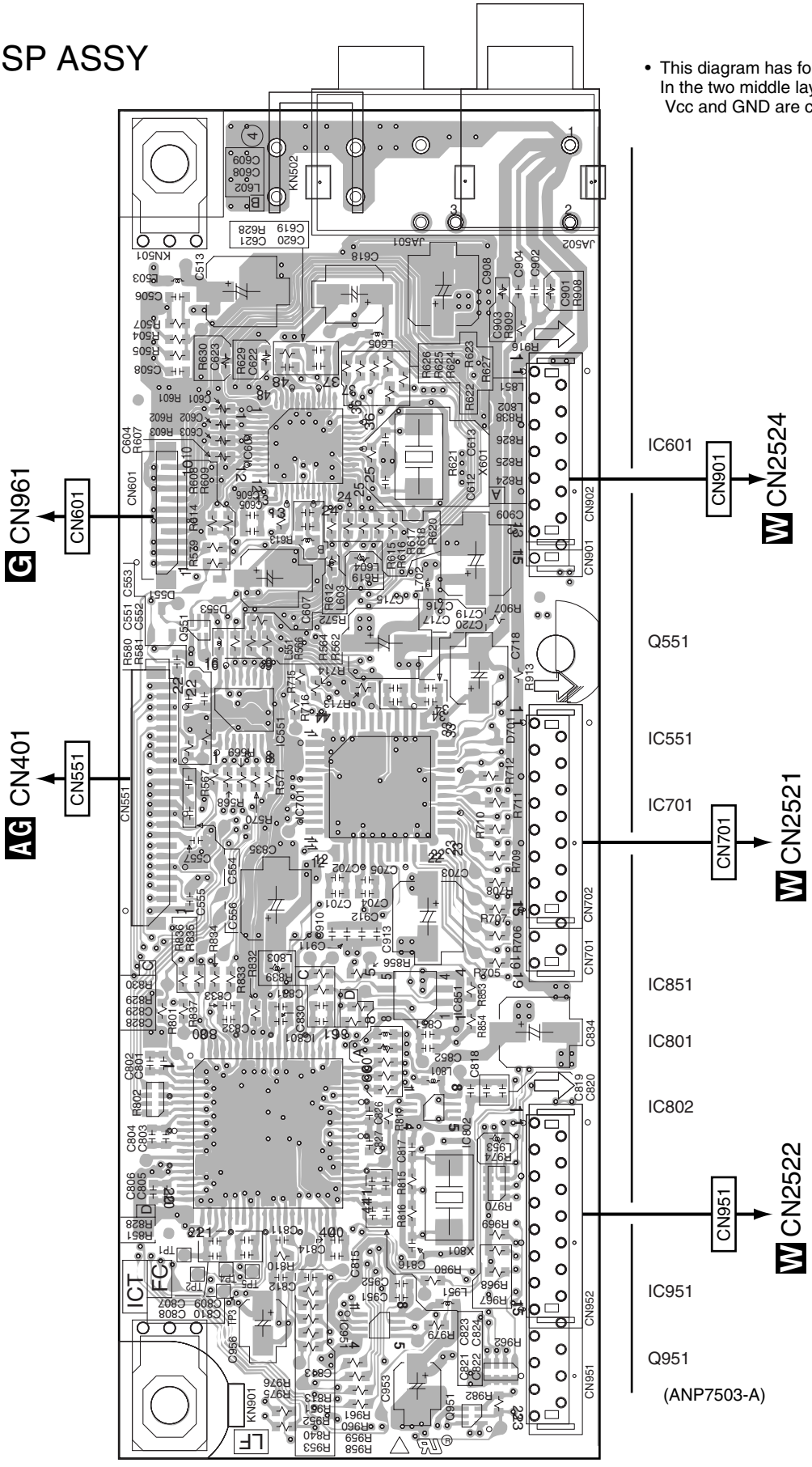

M **M**

SIDE B

SIDE B

M DSP ASSY

- This diagram has four layers.
  In the two middle layers, mainy Vcc and GND are connected.

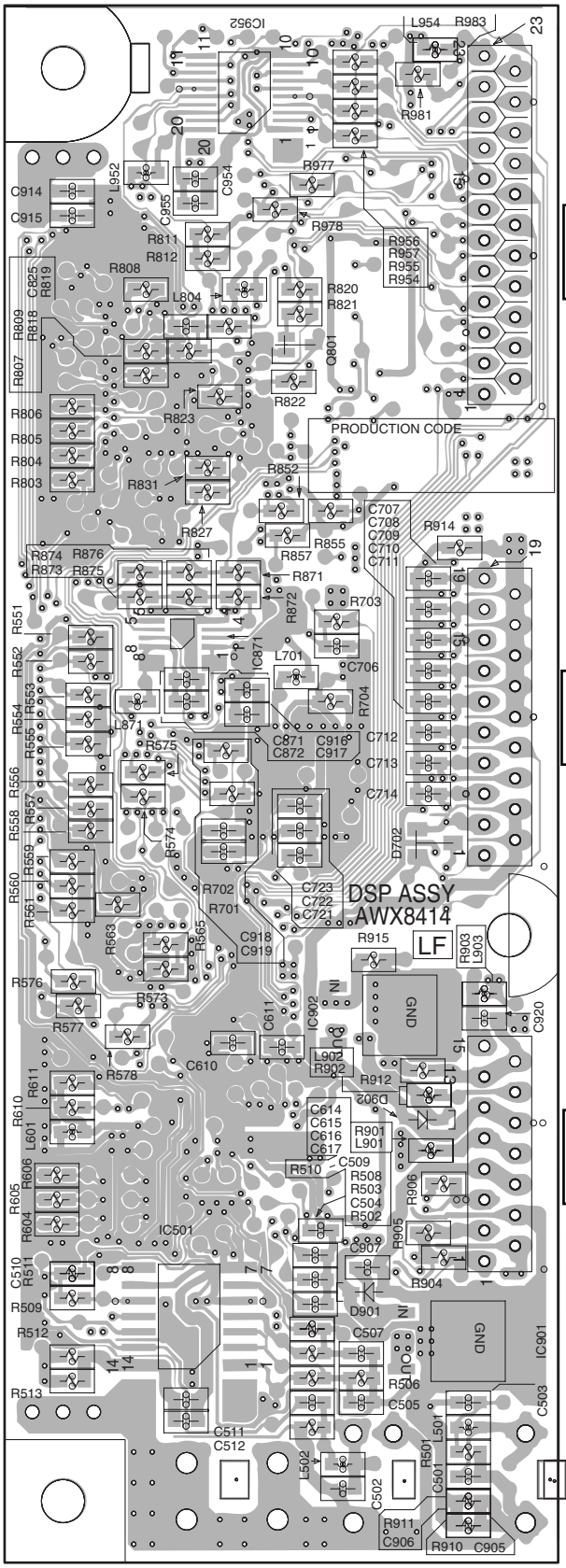

M

M

5 6 7 8

4.14 POWER PROTECT, POWER AMP-L, POSI 1 L and POSI 2 L ASSYS

SIDE A

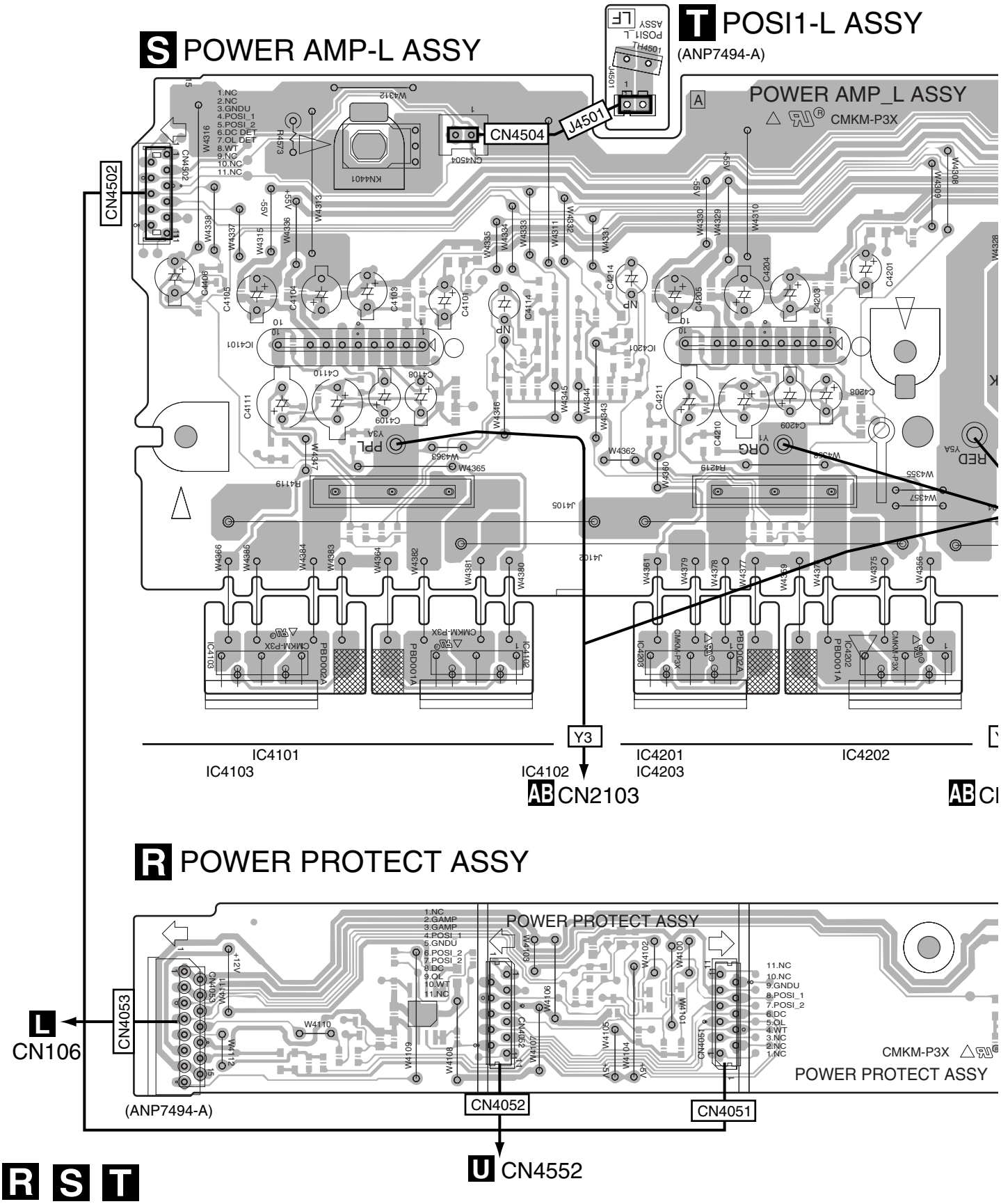

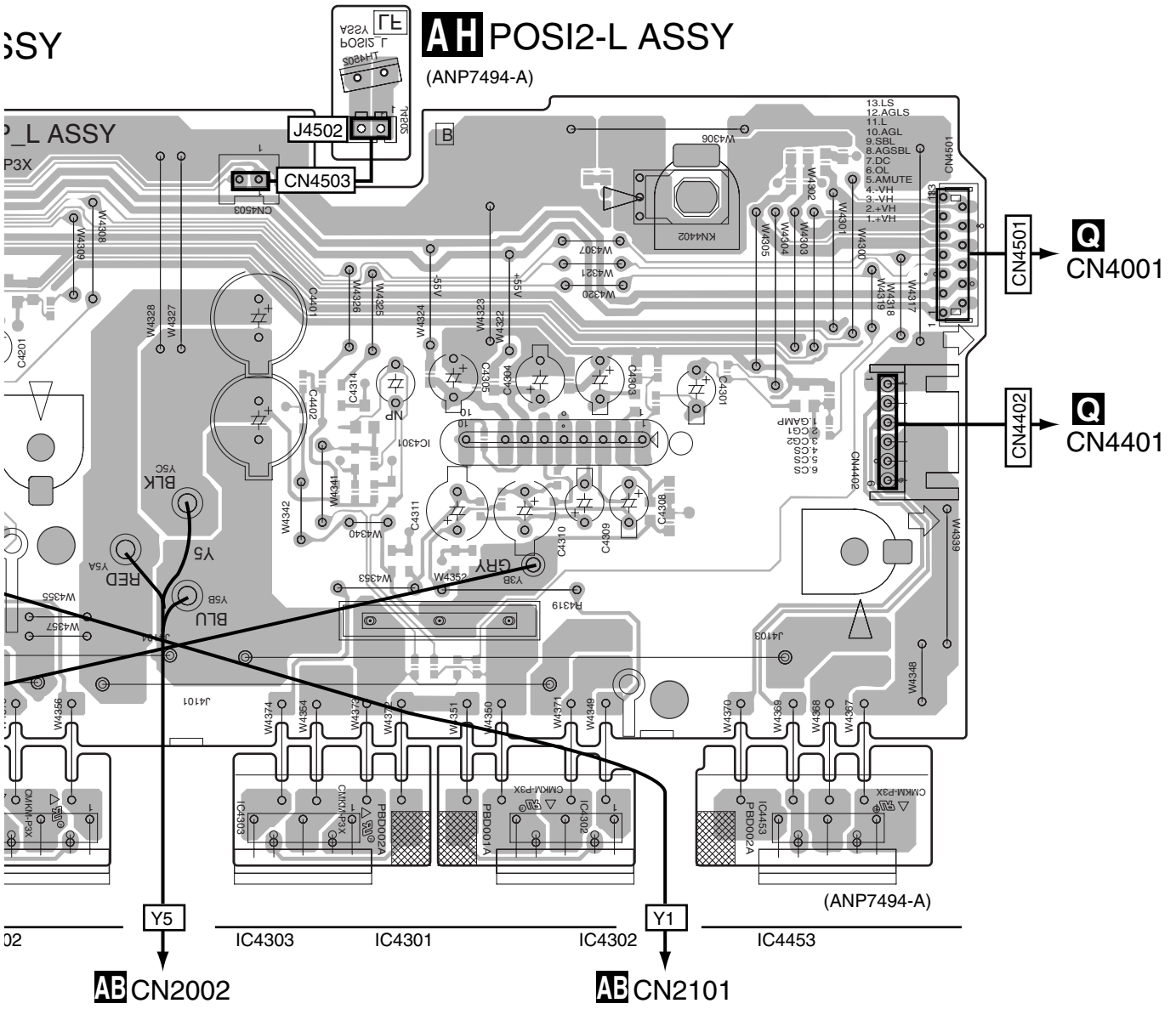
AH POSI2-L ASSY
(ANP7494-A)
J4502
CN4503
CN4501
Q
CN4001
CN4402
Q
CN4401
(ANP7494-A)
Y5
IC4303
IC4301
IC4302
Y1
IC4453
AB CN2002
AB CN2101

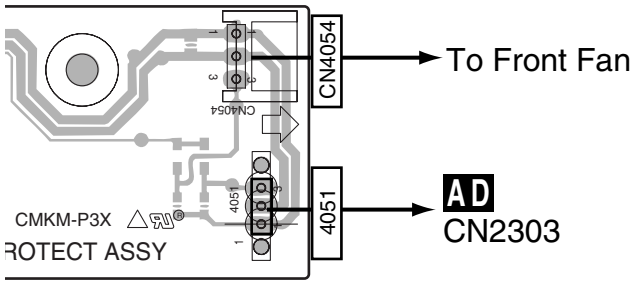
CN4054
To Front Fan
4051
AD
CN2303
CMKM-P3X
ROTECT ASSY

SIDE B

S POWER AMP-L ASSY

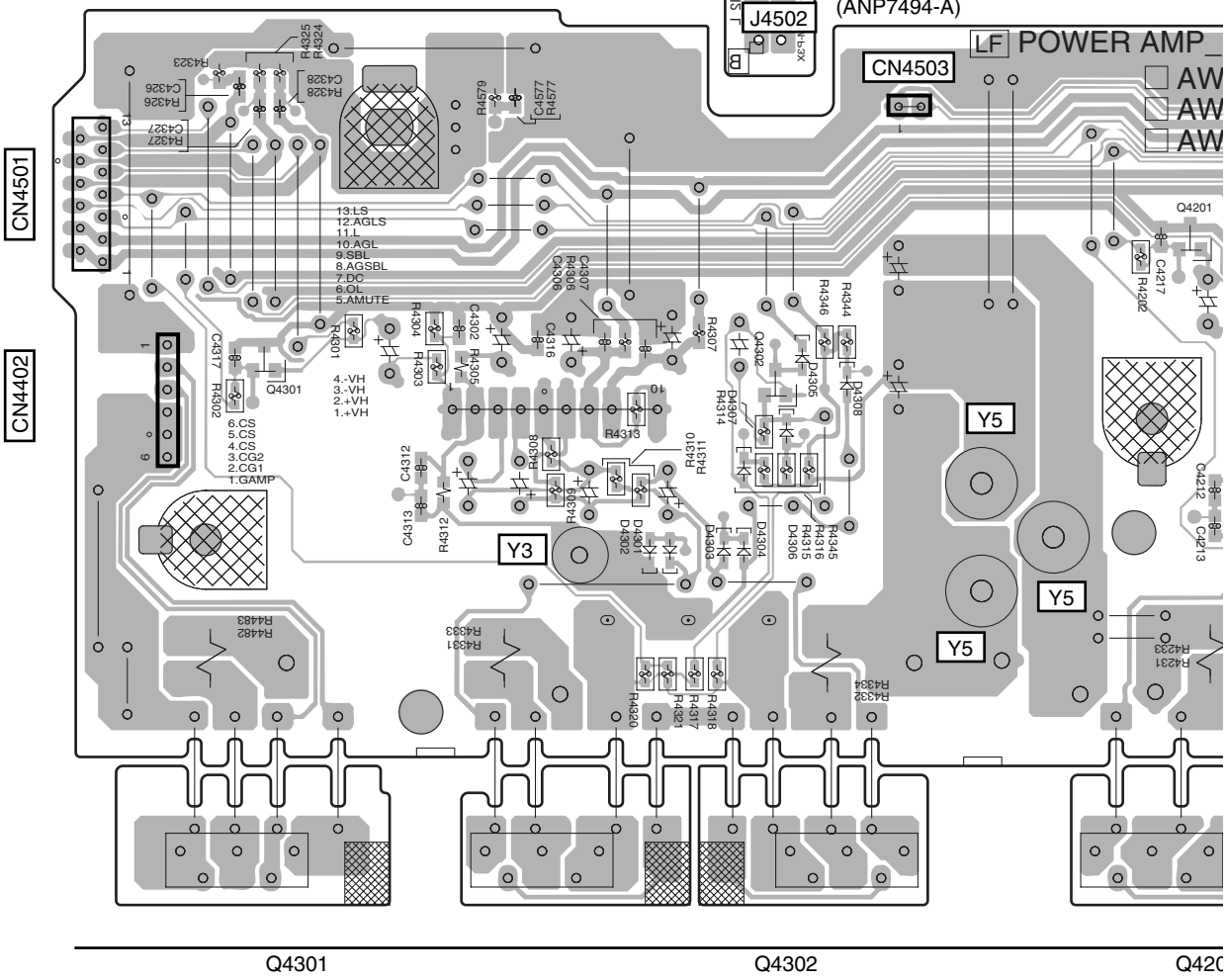

R POWER PROTECT ASSY

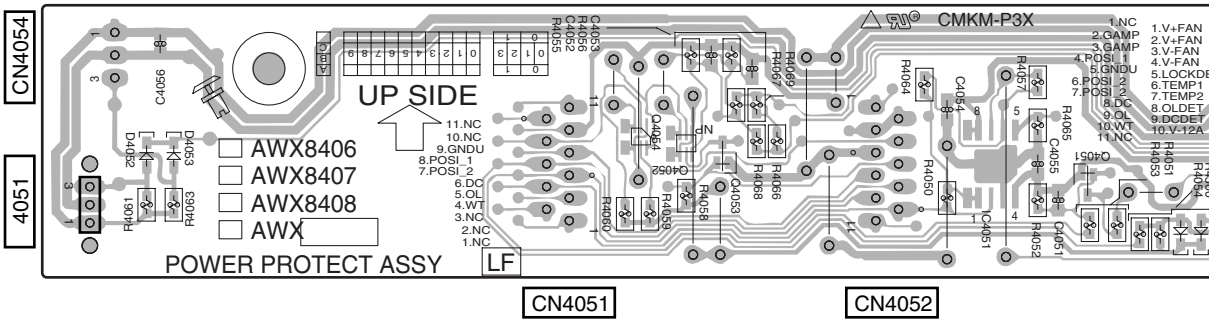

SIDE B

L

T POSI1-L ASSY

(ANP7494-A)

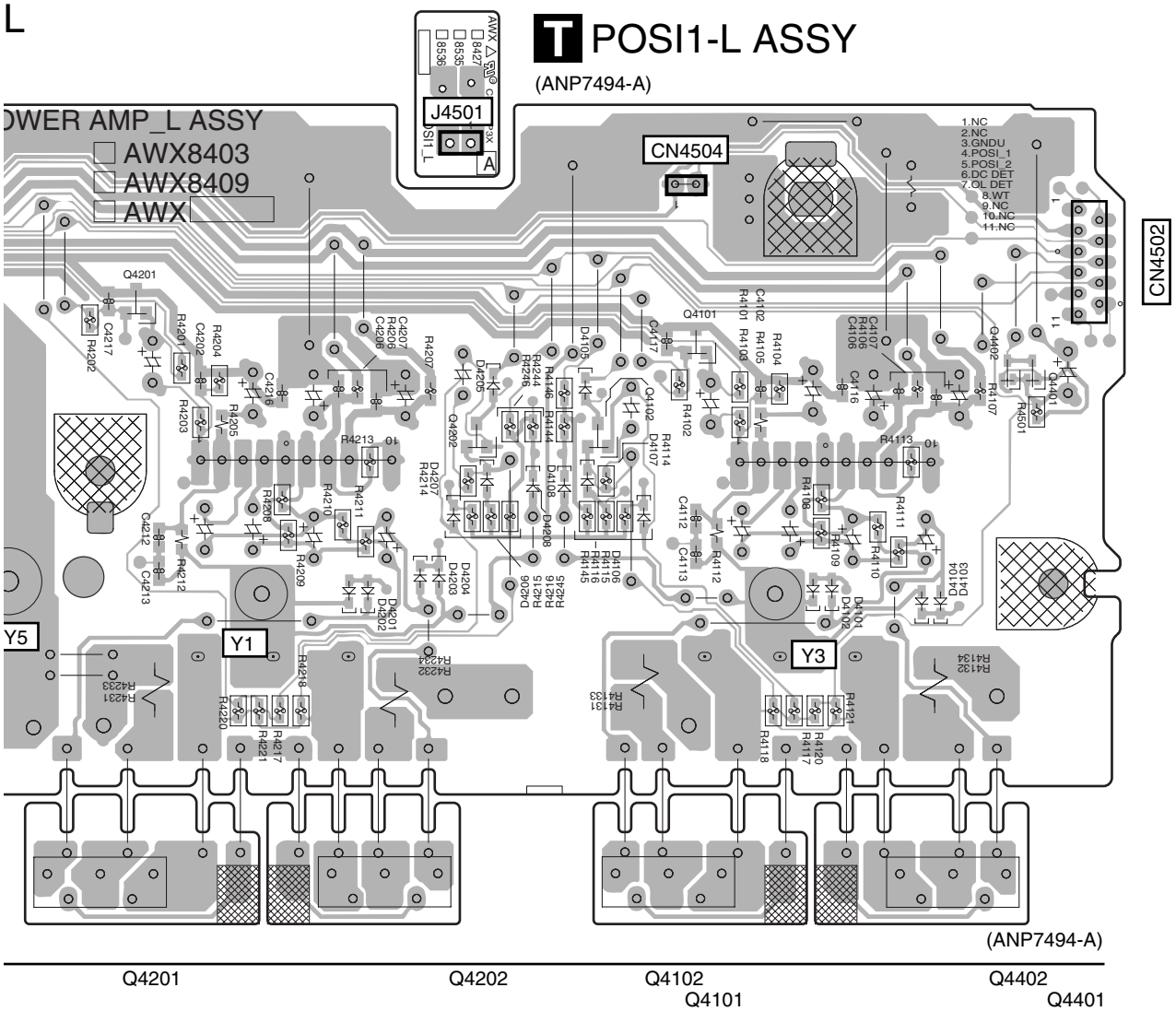

(ANP7494-A)

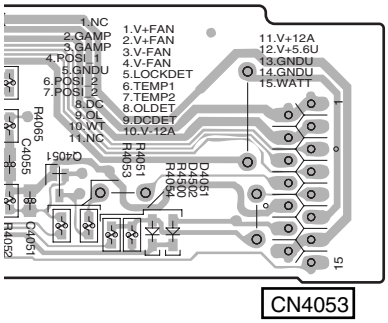

(ANP7494-A)

4.15 POWER AMP-R and POSI 1 R ASSYS

SIDE A

U POWER AMP-R ASSY

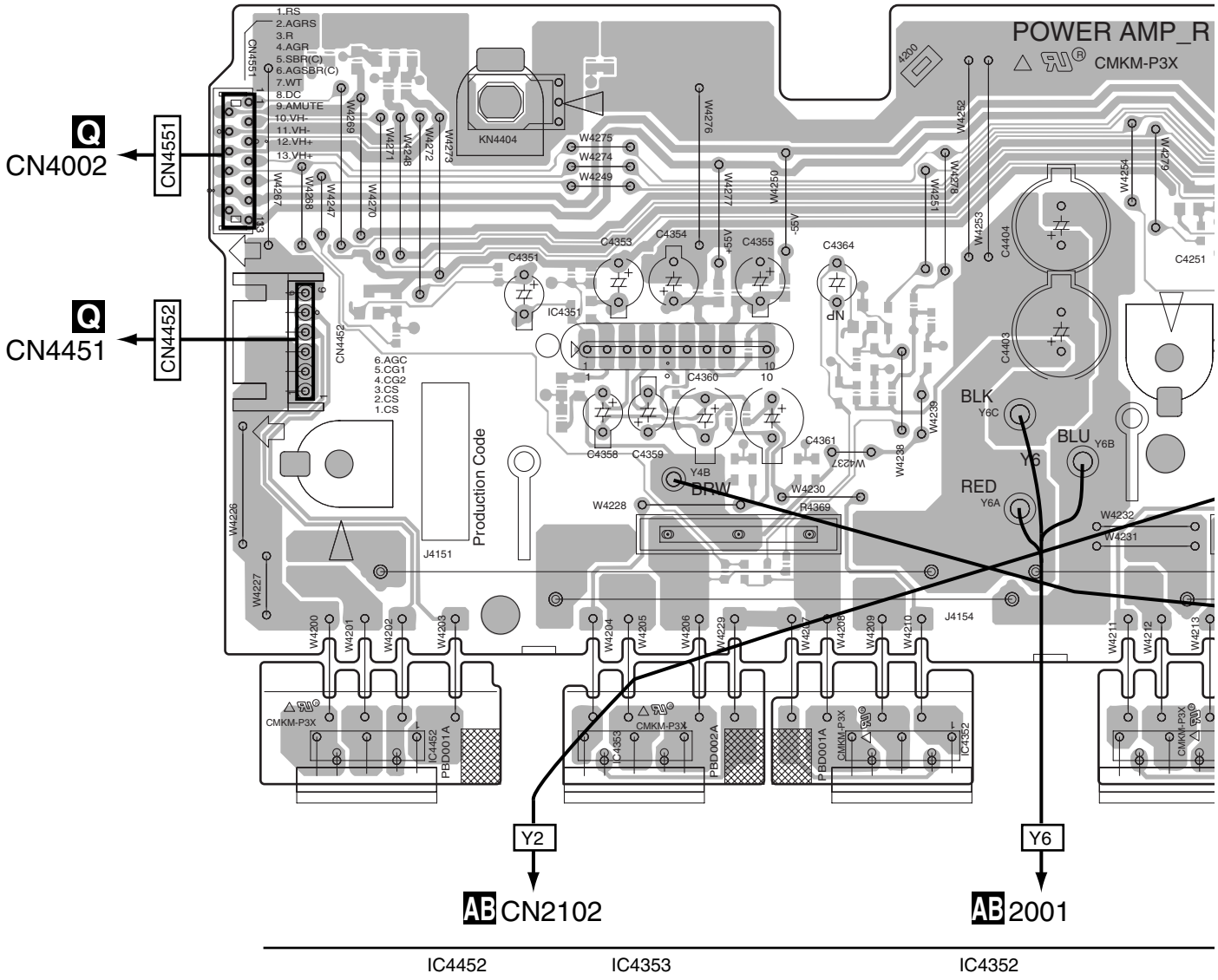

R POWER PROTECT ASSY

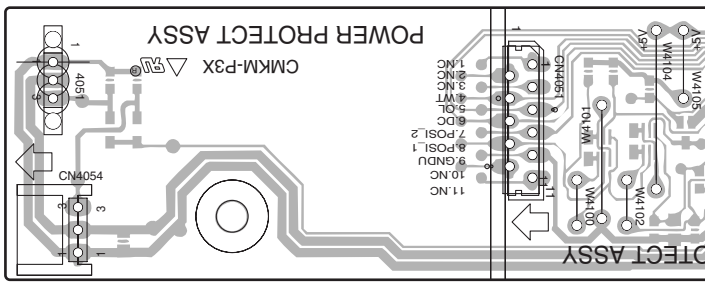

U V R

SIDE A

A B C D E F

V POSI1-R ASSY
(ANP7494-A)

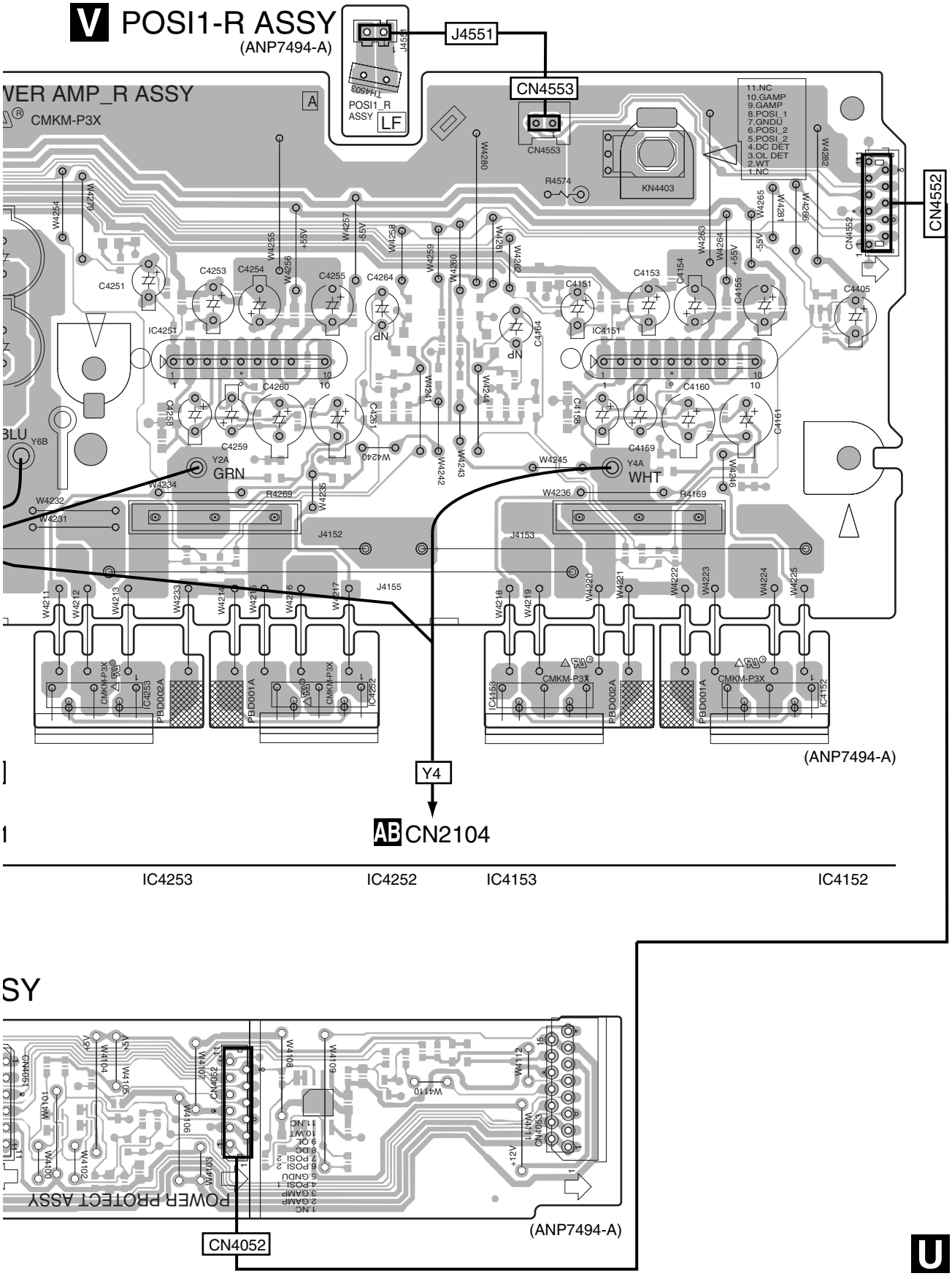

SY

SIDE B

U POWER AMP-R ASSY

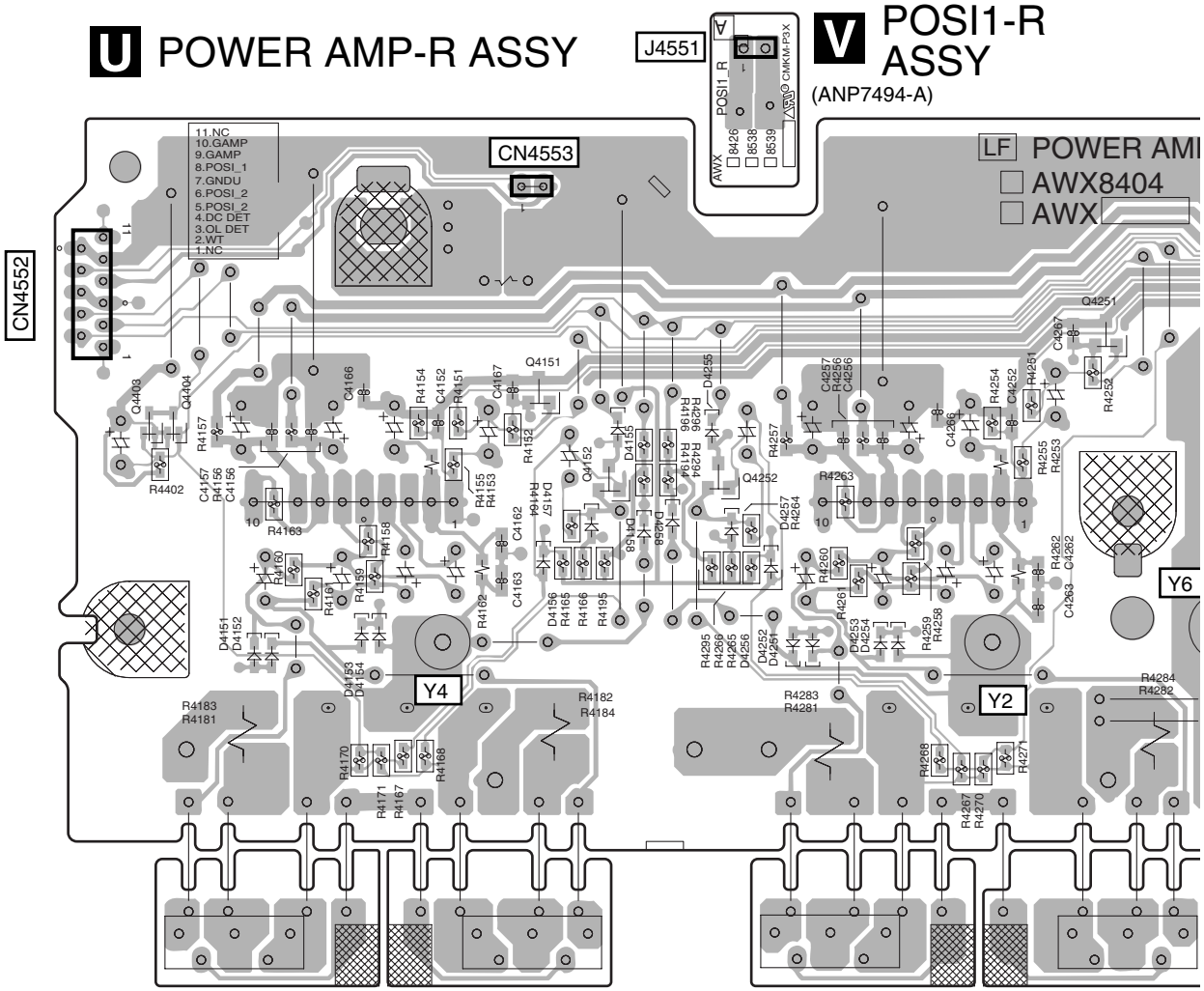

Q4403 Q4404 Q4151 Q4152 Q4252 Q4251

V POSI1-R ASSY

(ANP7494-A)

R POWER PROTECT ASSY

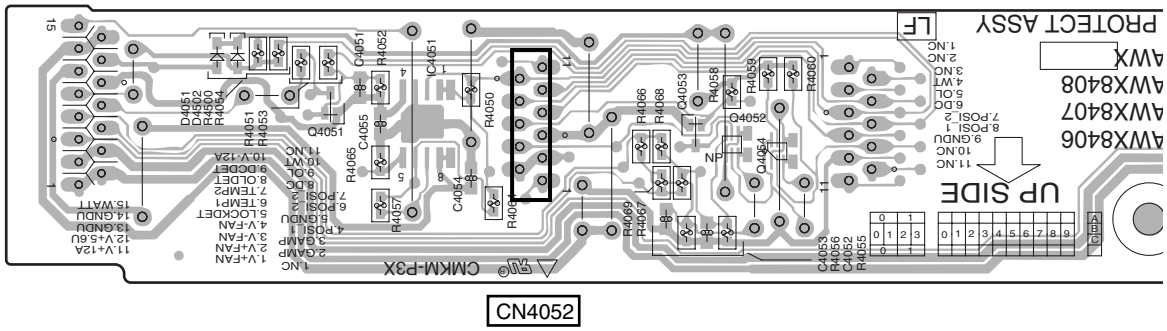

SIDE B

R

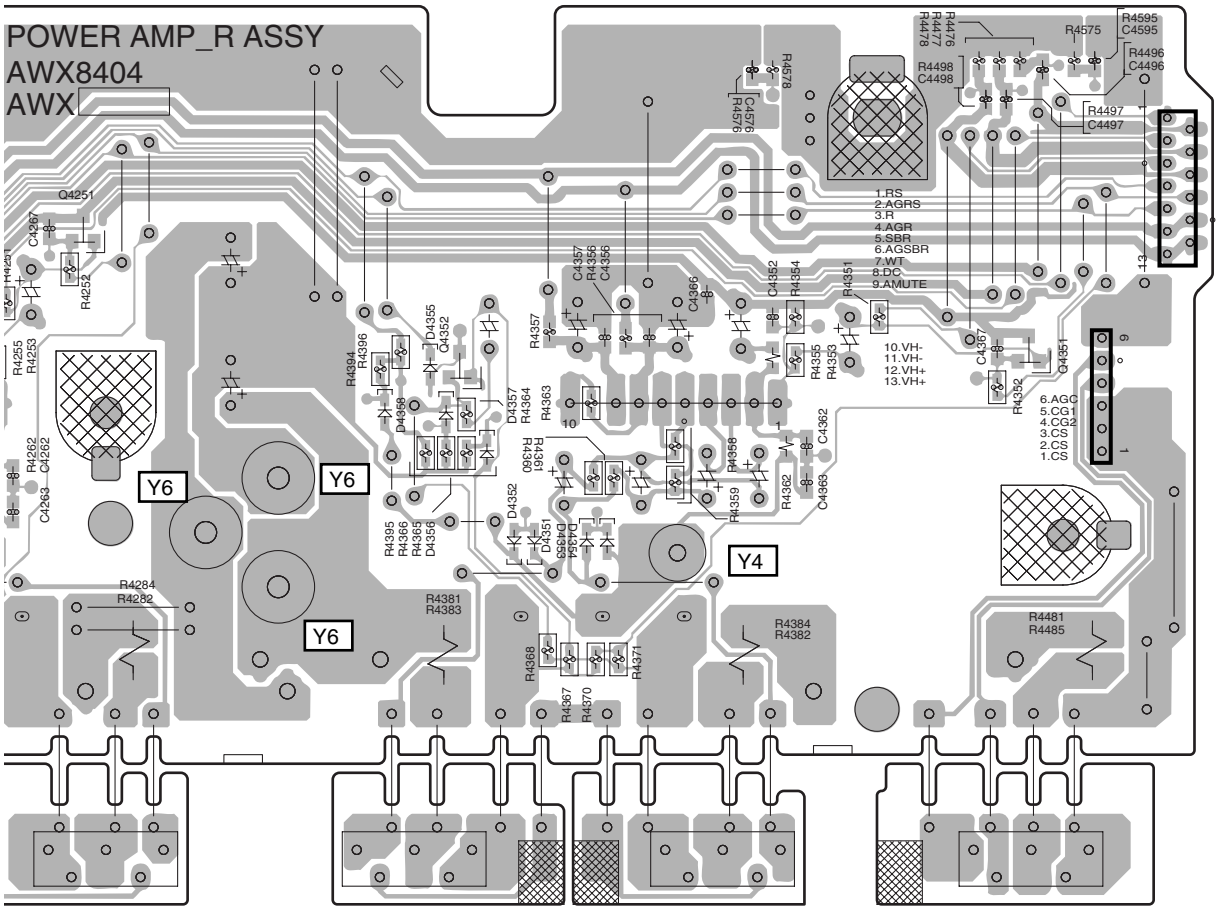

(ANP7494-A)

Q4251 Q4352 Q4351

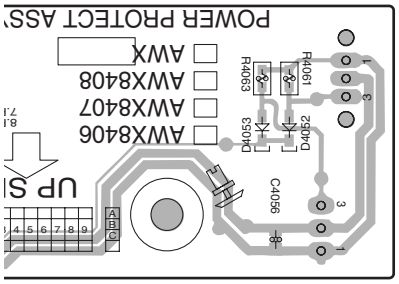

(ANP7494-A)

IC4051

Q4053
Q4051 Q4052

Q4054

4.16 REGULATOR ASSY

SIDE A

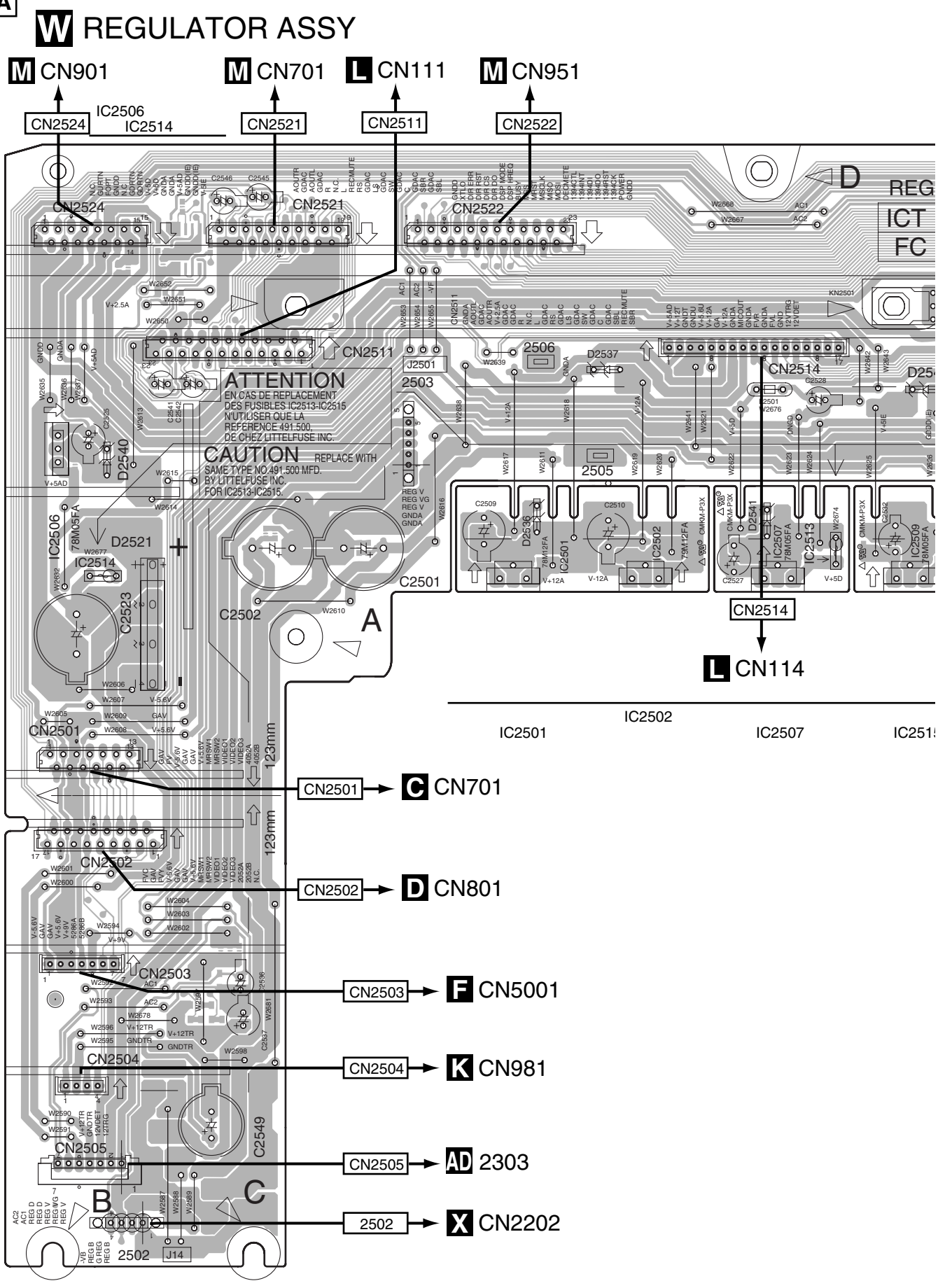

SIDE A

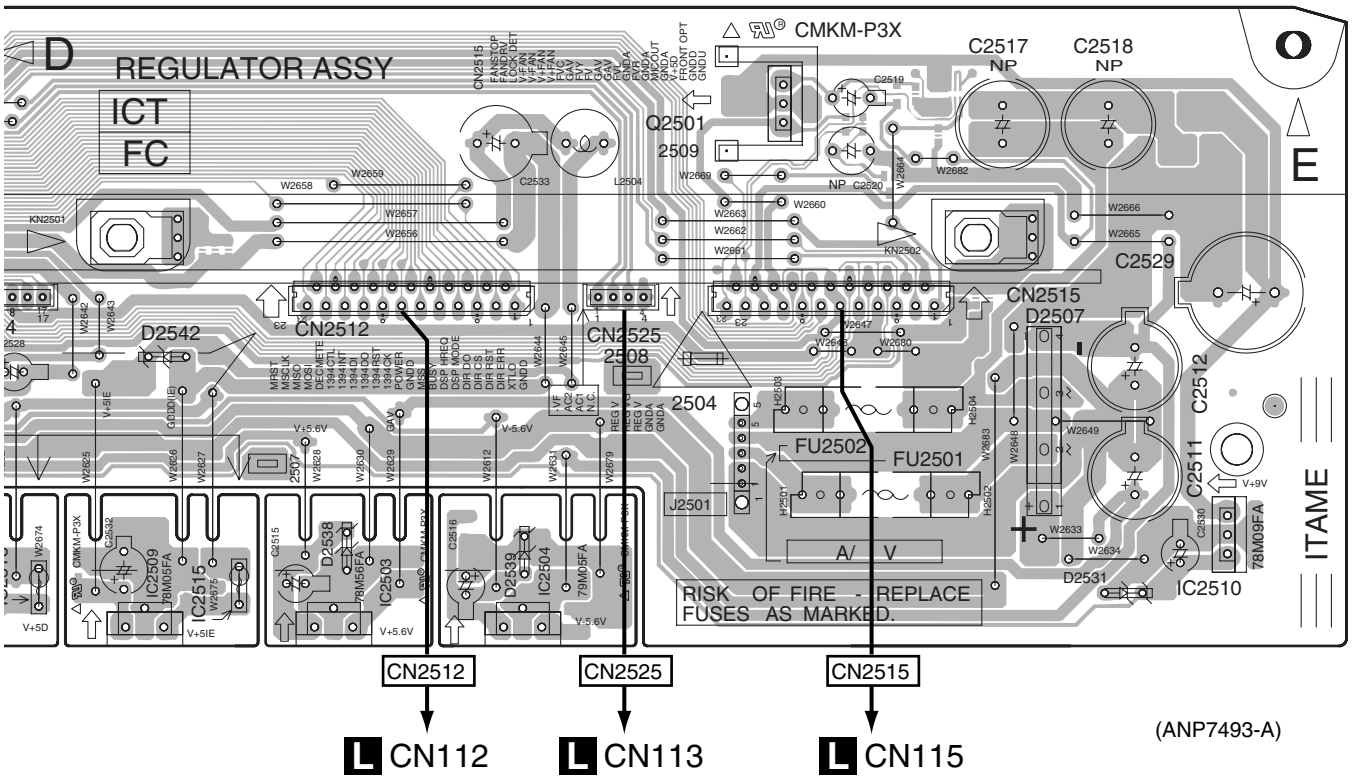

(ANP7493-A)

IC2515 IC2402 IC2401 IC2403 IC2409 Q2401 Q2402 IC2410

SIDE B

W REGULATOR ASSY

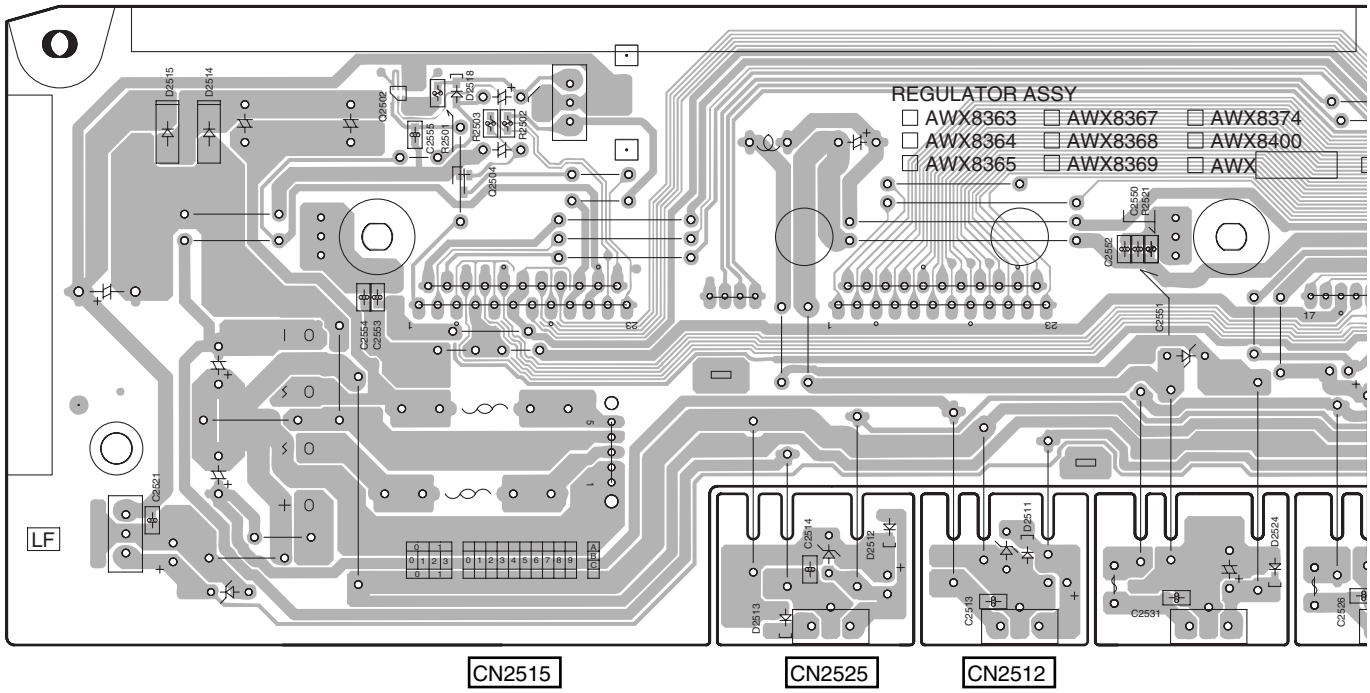

(ANP7493-A)

SIDE B

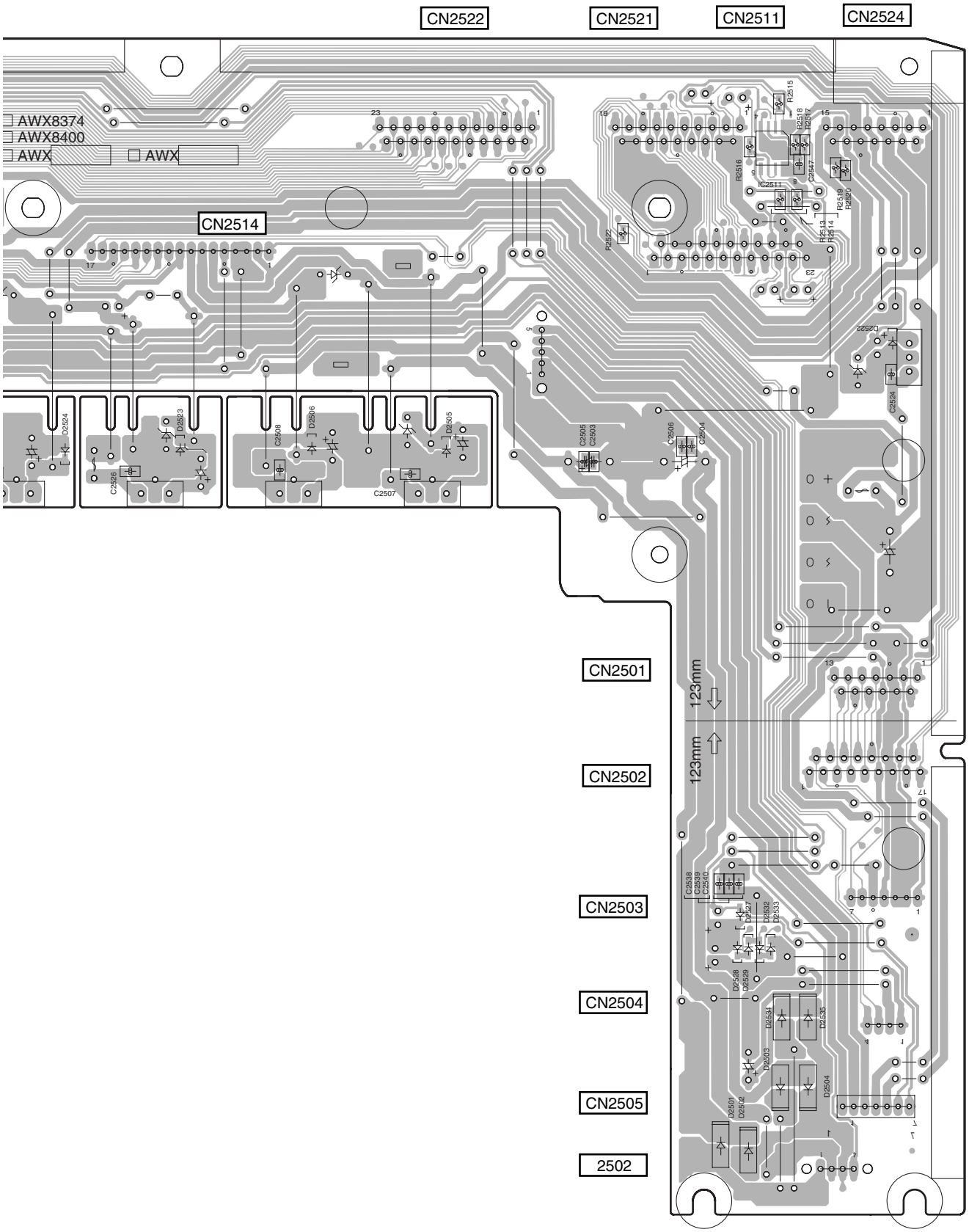
CN2522
CN2521
CN2511
CN2524
AWX8374
AWX8400
AWX
AWX
CN2514
CN2501
CN2502
CN2503
CN2504
CN2505
2502
123mm
123mm
IC2511

4.17 SP / PS ASSY

SIDE A **SIDE A**

A

AB SP/PS ASSY

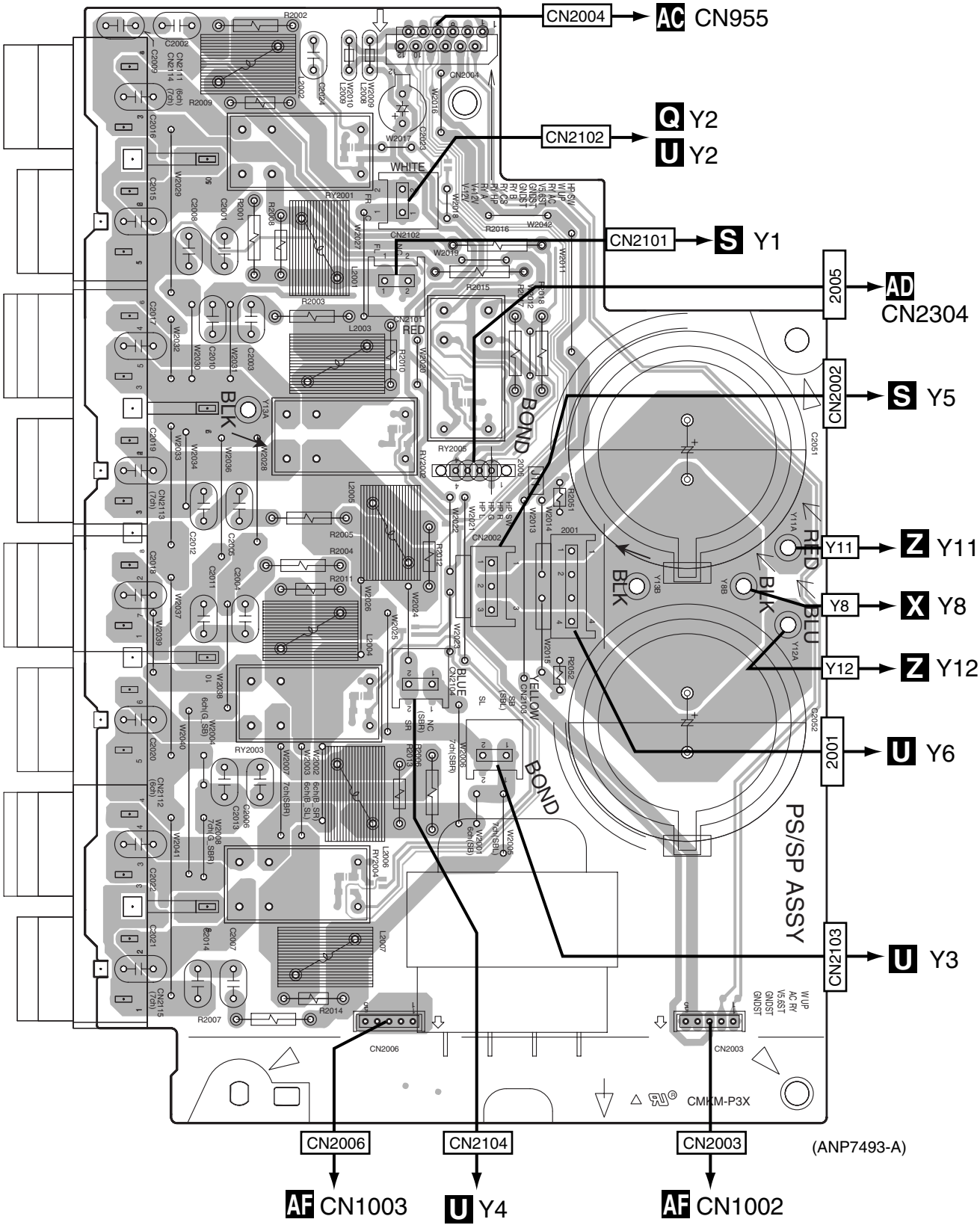

AB **AB**

SIDE B

SIDE B

AB SP/PS ASSY

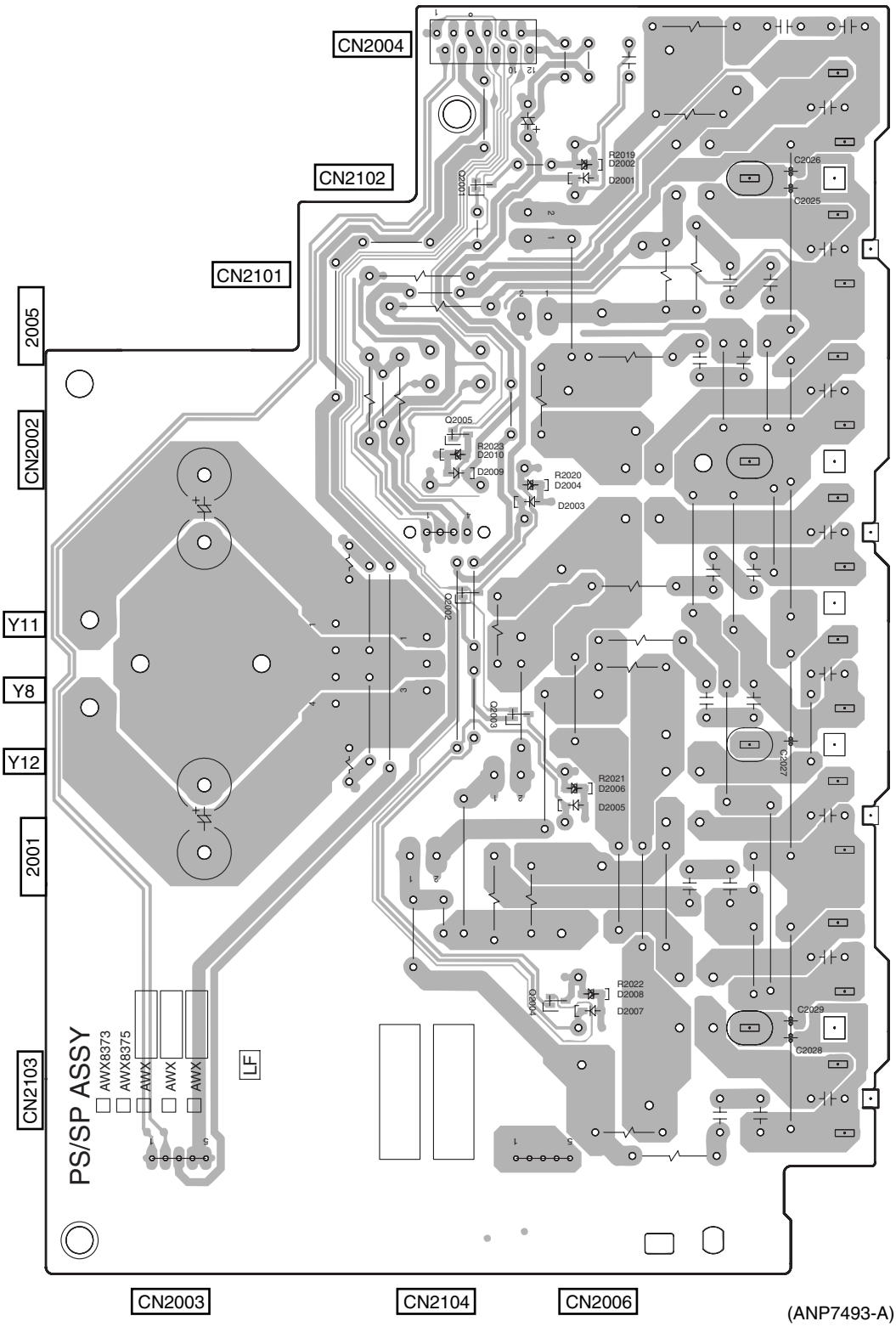

(ANP7493-A)

Q2006 Q2004
Q2002
Q2003

AB

AB

4.18 TRANS 2-1, DIODE and VH TR ASSYS

SIDE A

SIDE A

X TRANS 2-1 ASSY

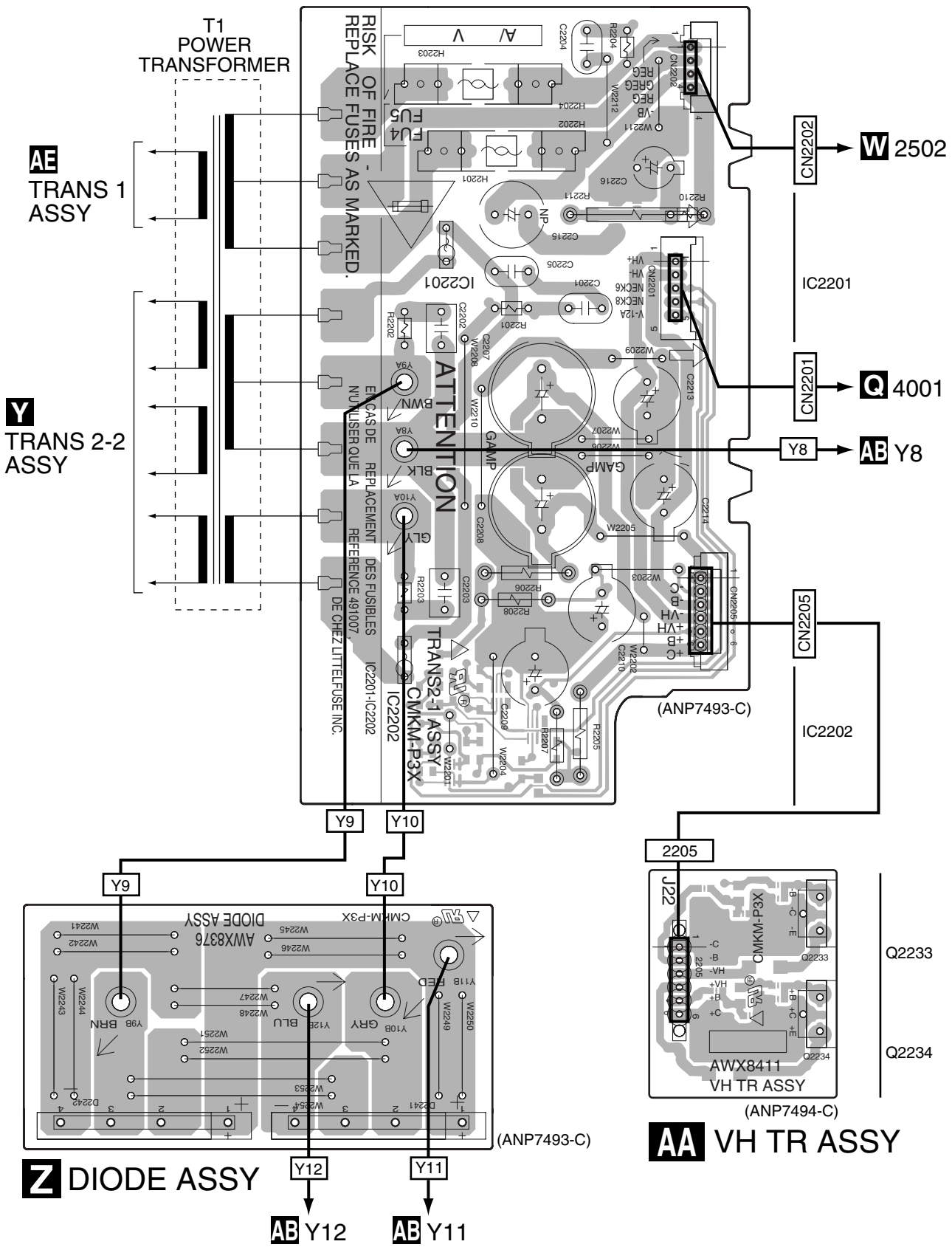

X Z AA

X Z AA

SIDE B

SIDE B

X TRANS 2-1 ASSY

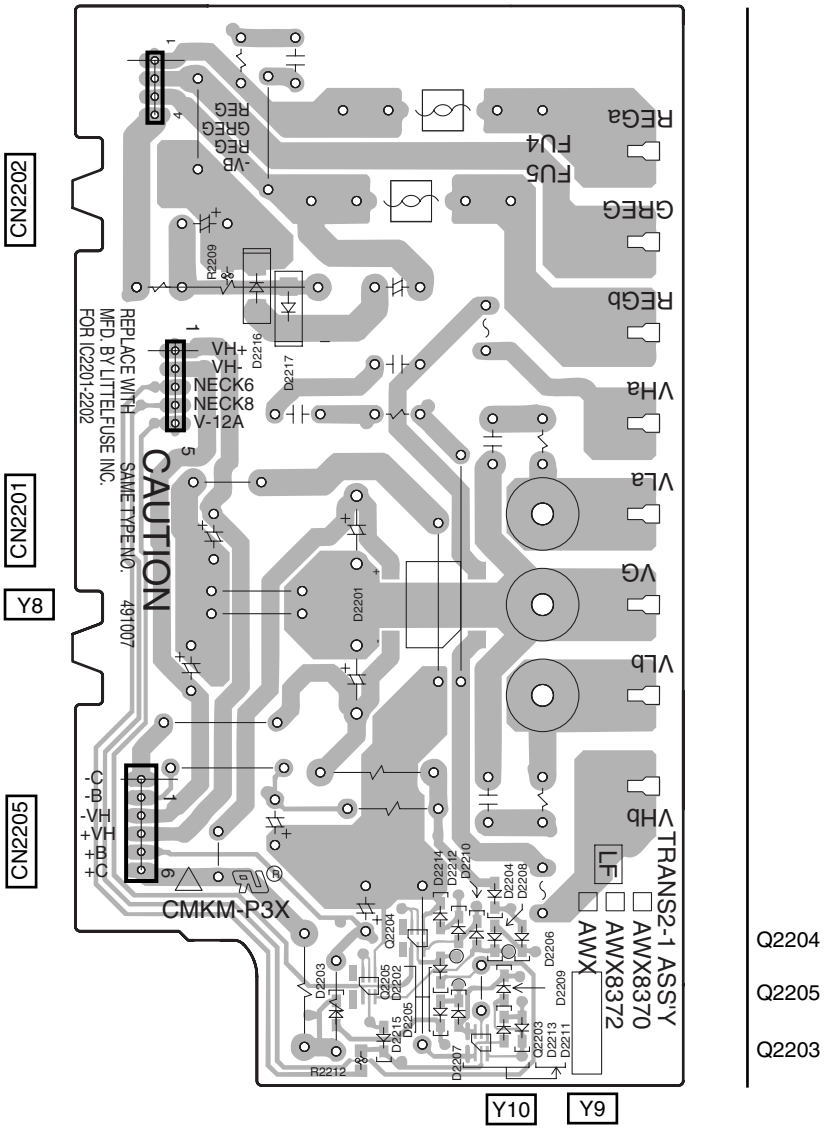

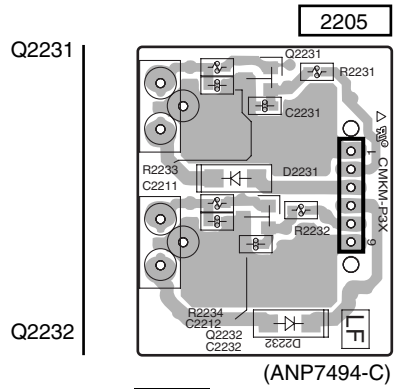

AA VH TR ASSY

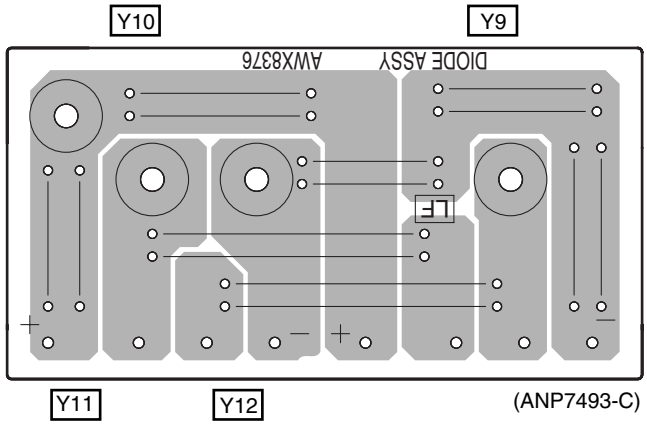

Z DIODE ASSY

X Z AA

X Z AA

4.19 TRANS SIDE ASSY

SIDE A

AD TRANS SIDE ASSY

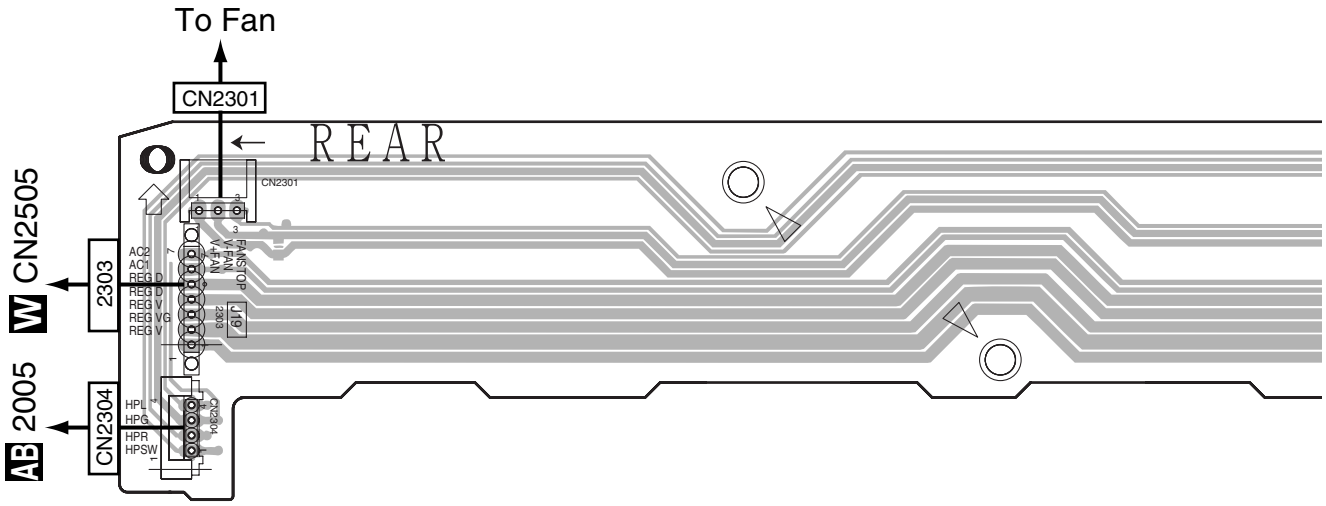

SIDE B

AD TRANS SIDE ASSY

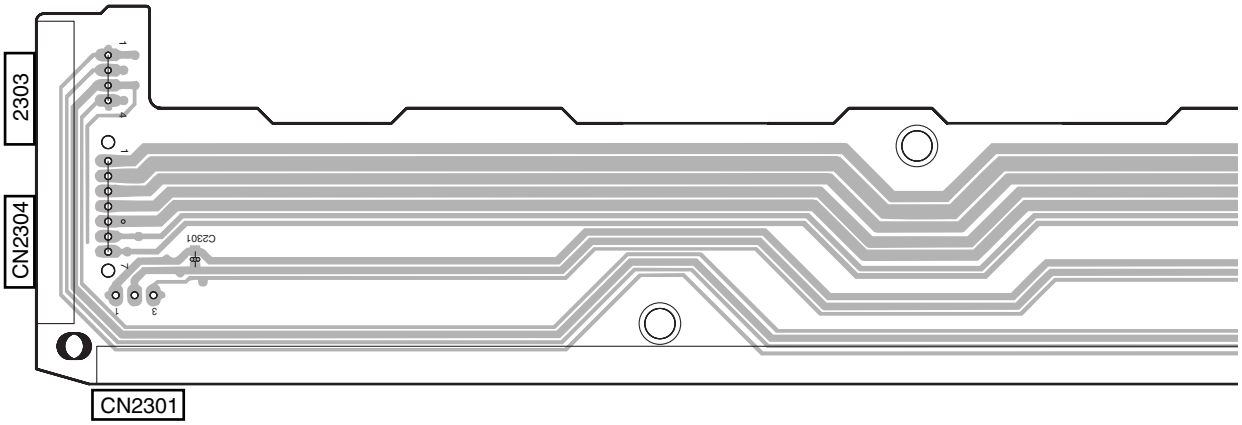

AD

SIDE A

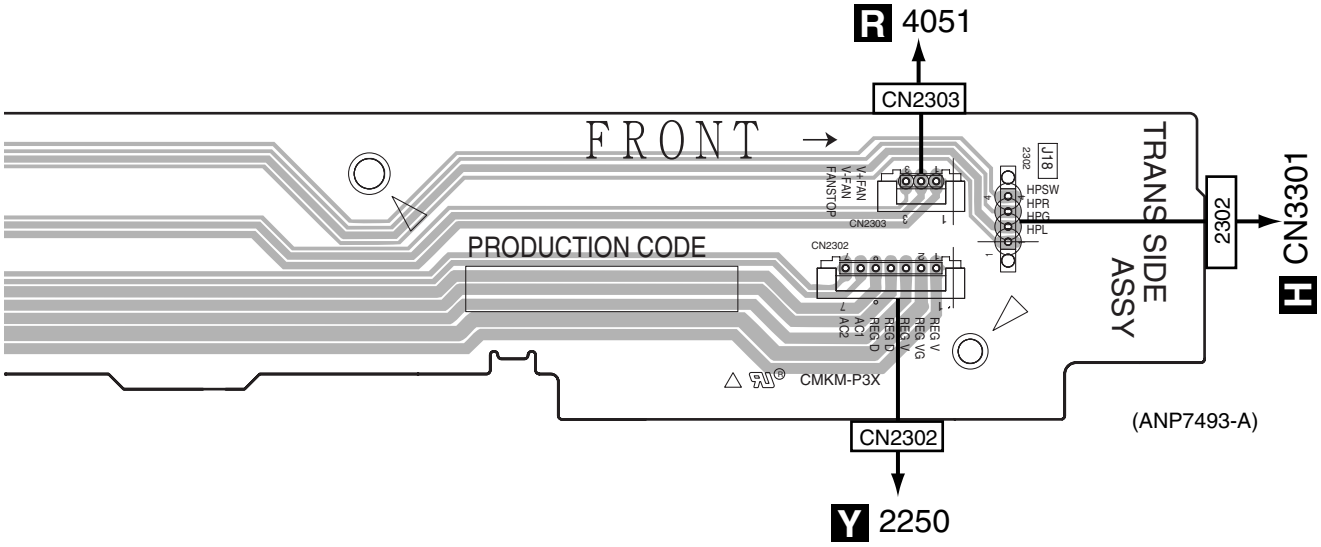

(ANP7493-A)

SIDE B

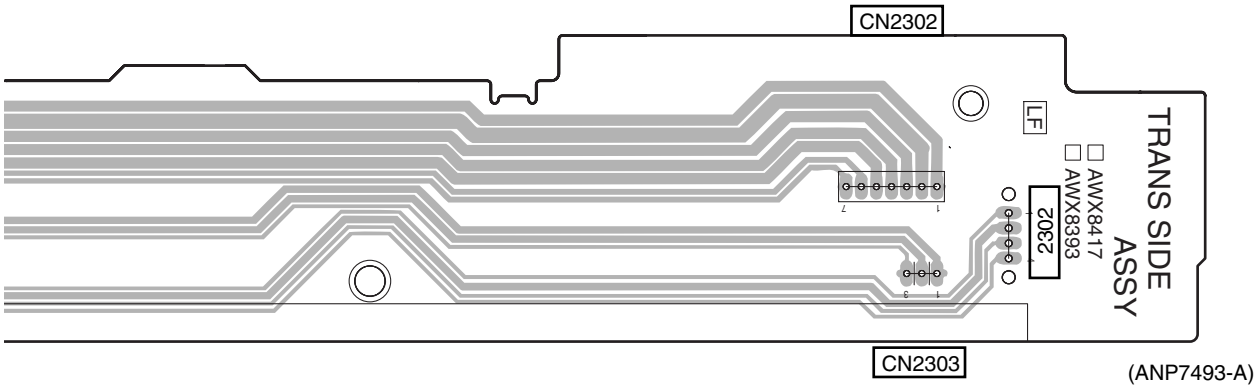

(ANP7493-A)

AD

4.20 TRANS 2-2, TRANS 1 and PRIMARY ASSYS

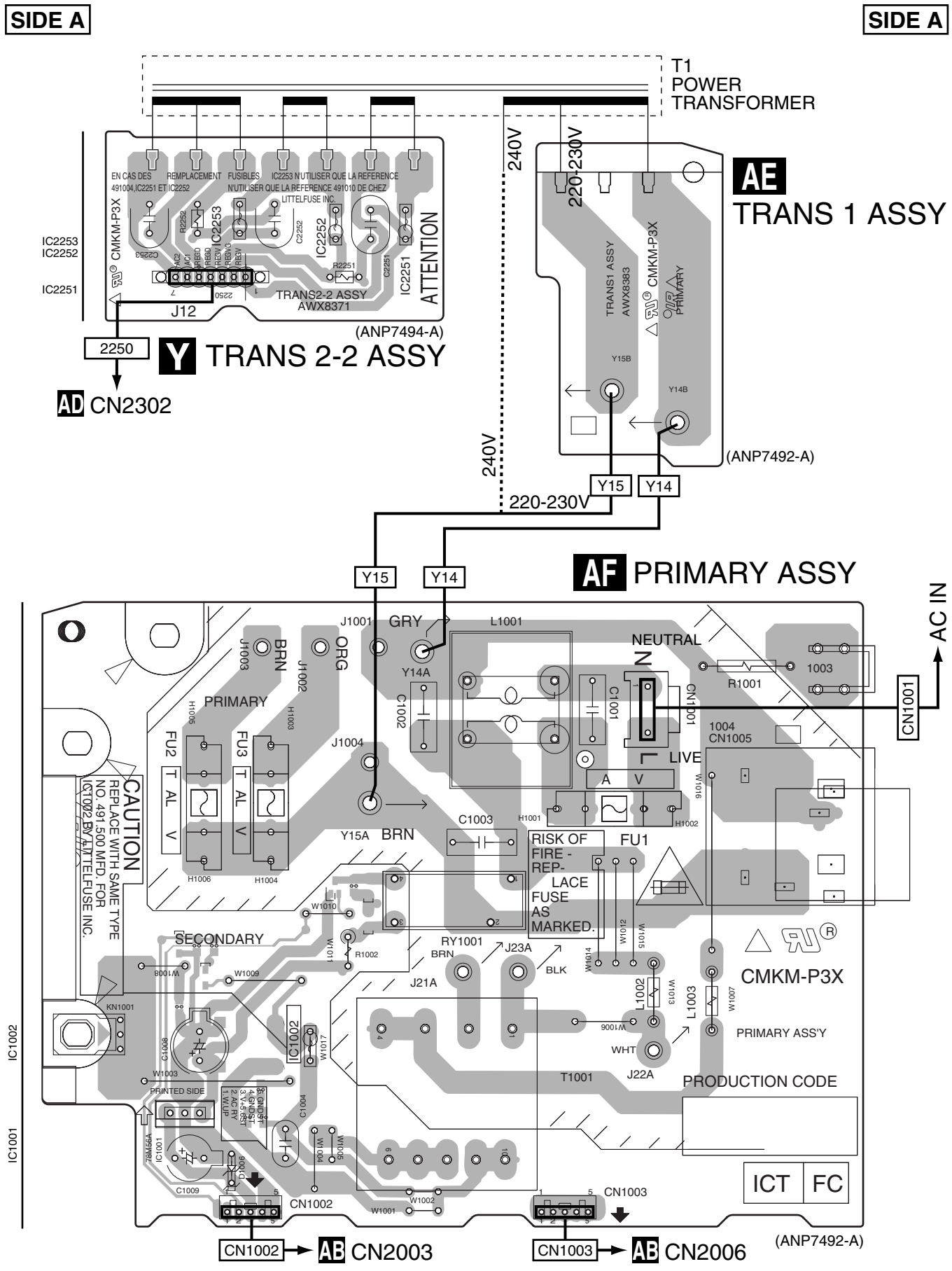

SIDE B

SIDE B

● Line Voltage Selection

Line Voltage can be changed by the following modification:

1. Disconnect the AC power cord.
2. Remove the cover.
3. Change the connection wire from TRANS 1 ASSY to PRIMARY ASSY (Terminal No. Y15) as follows.

Voltage	Terminal No.
220-230V	Y15 of TRANS 1 ASSY
240V	240V terminal of power transformer

4. Stick a line voltage label on the rear panel.

Description	Part No.
240V label	AAX-192

AE TRANS 1 ASSY

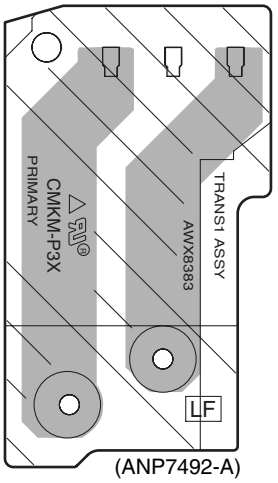

(ANP7492-A)

Y14 Y15

Y TRANS 2-2 ASSY

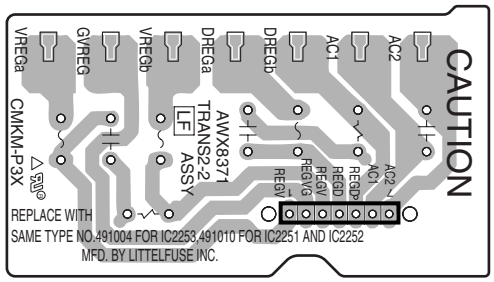

(ANP7494-A)

2250

AF PRIMARY ASSY

Y14 Y15

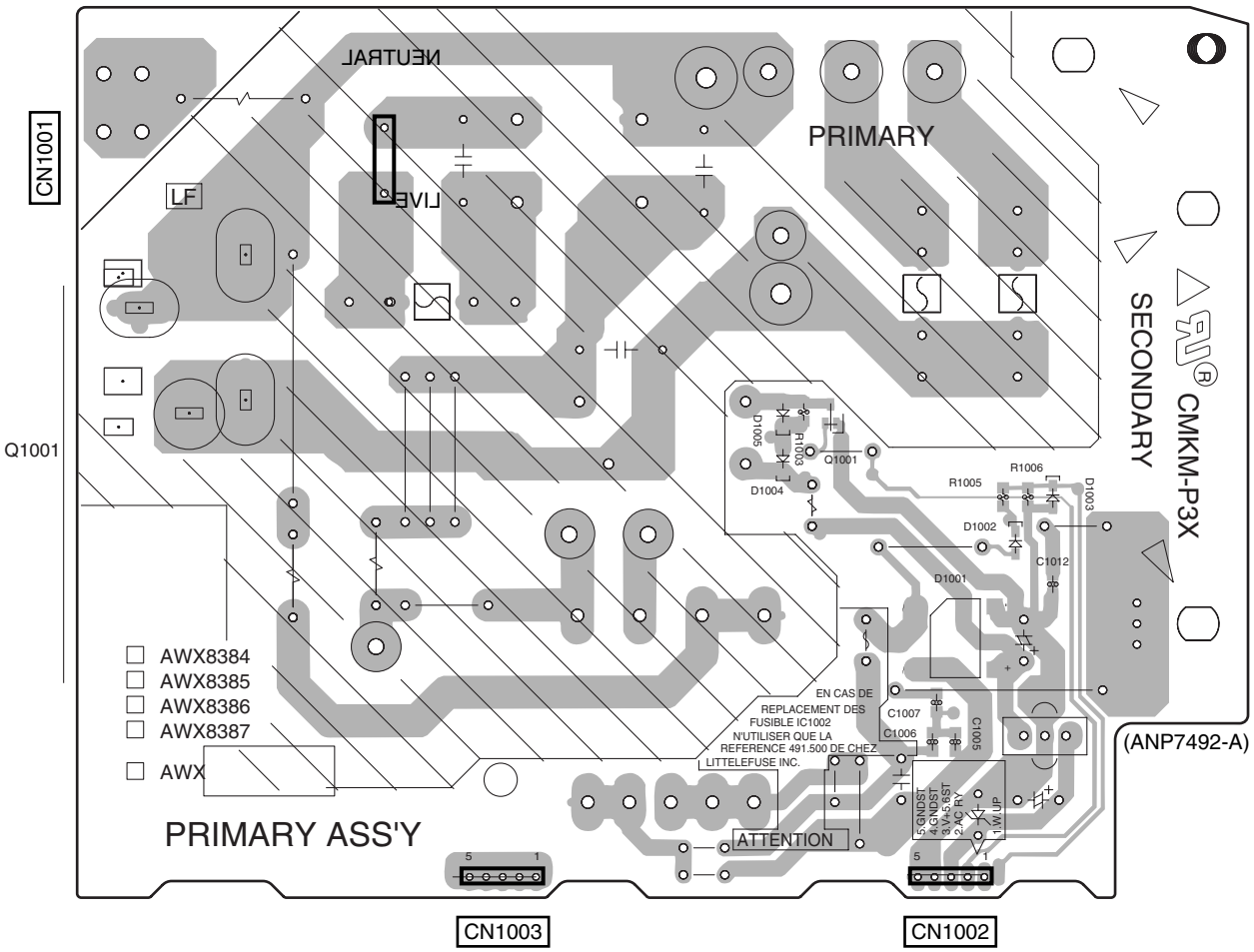

Y AE AF

Y AE AF

5 6 7 8

4.21 REAR TOP ASSY

SIDE A

SIDE A

AC REAR TOP ASSY

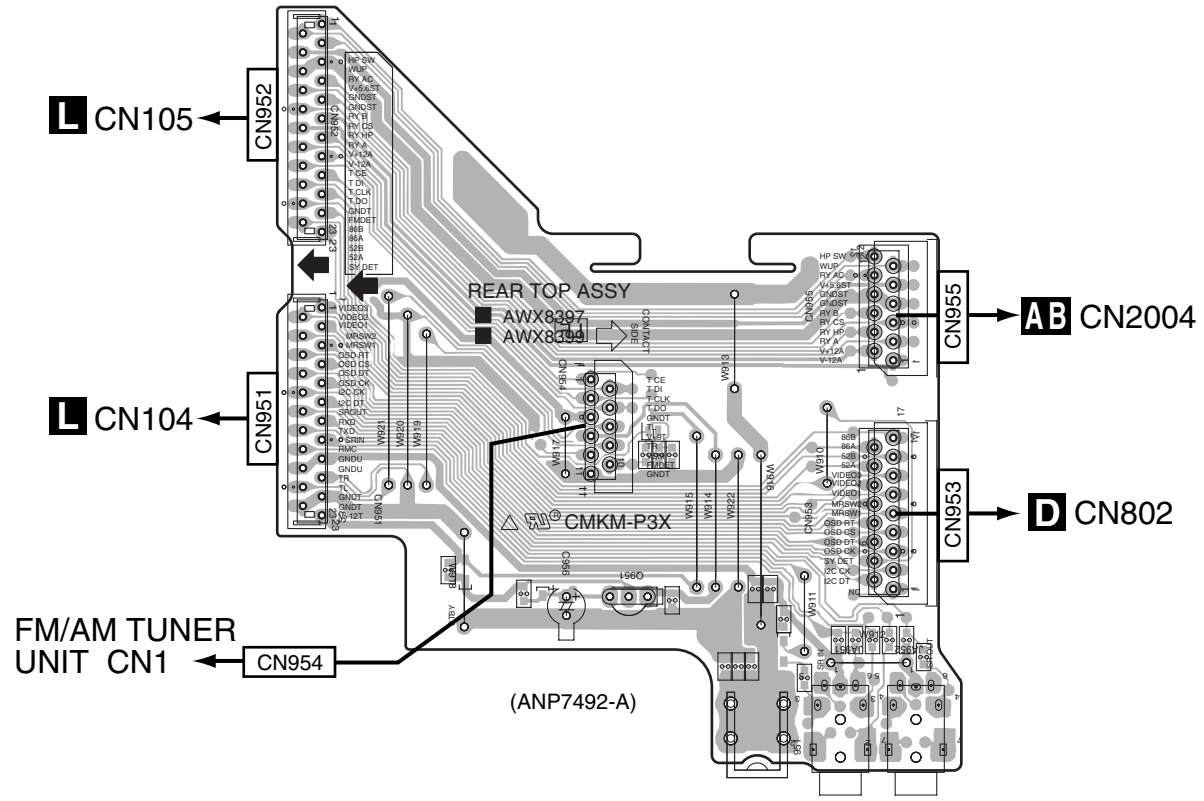

SIDE B

SIDE B

AC REAR TOP ASSY

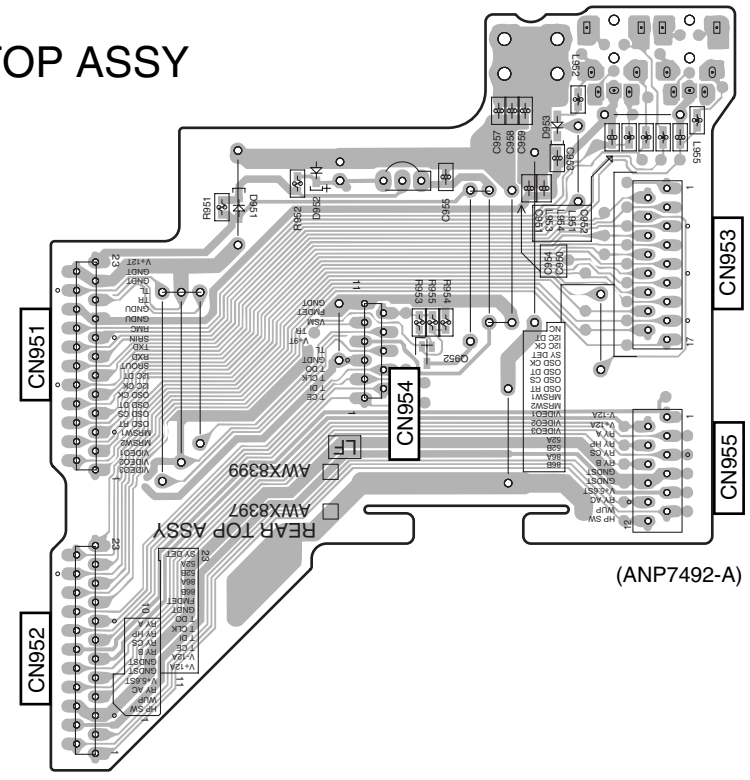

AC

AC

4.22 1394 ASSY (VSX-2014i ONLY)

SIDE A

SIDE A

AG 1394 ASSY

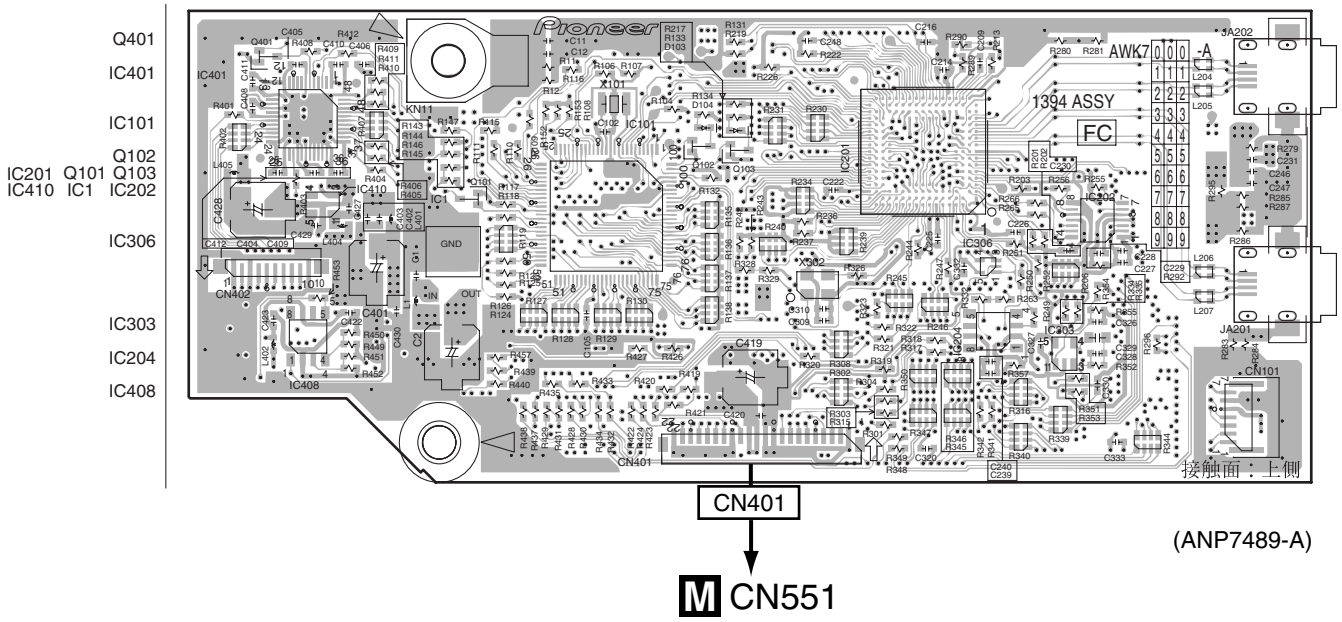

(ANP7489-A)

SIDE B

SIDE B

AG 1394 ASSY

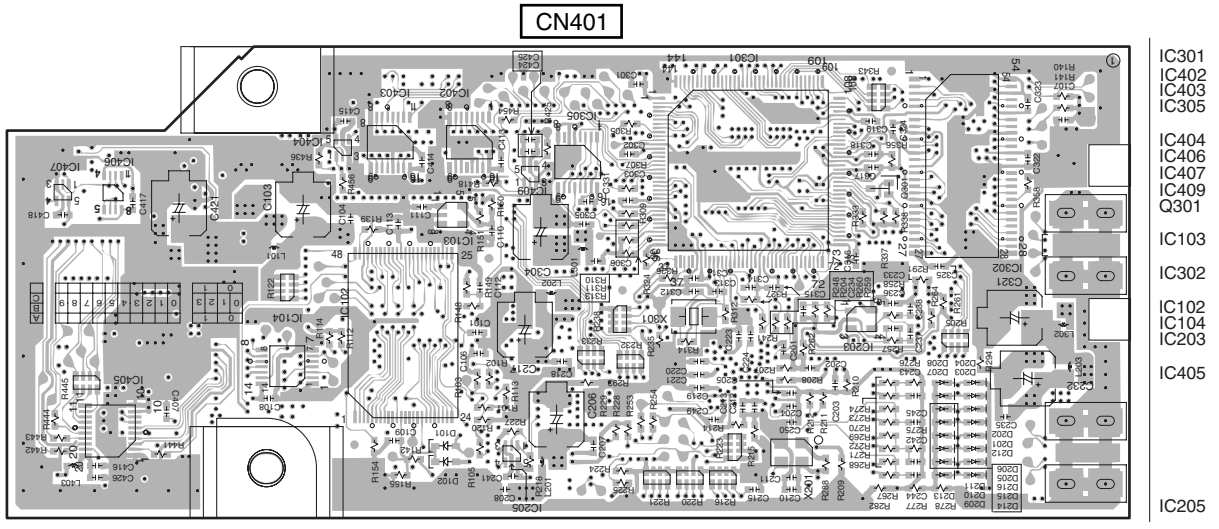

(ANP7489-A)

5. PCB PARTS LIST

NOTES:
- *Parts marked by "NSP" are generally unavailable because they are not in our Master Spare Parts List.*
- *The ⚠ mark found on some component parts indicates the importance of the safety factor of the part. Therefore, when replacing, be sure to use parts of identical designation.*
- *When ordering resistors, first convert resistance values into code form as shown in the following examples.*

Ex.1 When there are 2 effective digits (any digit apart from 0), such as 560 ohm and 47k ohm (tolerance is shown by J=5%, and K=10%).

560 Ω → 56 x 10^1 → 561 ..... RD1/4PU 5 6 1 J
47k Ω → 47 x 10^3 → 473 ..... RD1/4PU 4 7 3 J
0.5 Ω → R50 ..... RN2H R 5 0 K
1 Ω → 1R0 ..... RS1P 1 R 0 K

Ex.2 When there are 3 effective digits (such as in high precision metal film resistors).

5.62k Ω → 562 x 10^1 → 5621 ..... RN1/4PC 5 6 2 1 F

• LIST OF WHOLE PCB ASSEMBLIES

Mark	Symbol and Description	VSX-2014i /HYXJ	VSX-1014 /HYXJ
	1..FM/AM TUNER UNIT	AXX7170	AXX7170
NSP	1..SECONDARY ASSY	AWK7816	AWK7820
	2..REGULATOR ASSY	AWX8365	AWX8369
	2..TRANS 2-1 ASSY	AWX8370	AWX8370
	2..SP/PS ASSY	AWX8402	AWX8375
	2..DIODE ASSY	AWX8376	AWX8376
	2..TRANS SIDE ASSY	AWX8417	AWX8417
NSP	1..COMPLEX ASSY	AWK7808	AWK7812
	2..DISPLAY ASSY	AWX8388	AWX8389
	2..VOLUME ASSY	AWX8378	AWX8378
	2..MULTI JOG ASSY	AWX8379	AWX8379
	2..HEADPHONE ASSY	AWX8380	AWX8380
	2..FRONT IN ASSY	AWX8381	AWX8381
	2..AUDIO CONNECT ASSY	AWX8382	AWX8382
	2..TRANS 1 ASSY	AWX8383	AWX8383
	2..PRIMARY ASSY	AWX8386	AWX8386
	2..OPTICAL-IN ASSY	AWX8394	AWX8394
	2..REAR TOP ASSY	AWX8399	AWX8399
	2..FRONT-IN CONNECT ASSY	AWX8416	AWX8416
NSP	1..MAIN ASSY	AWK7800	AWK7804
	2..MAIN CONTROL ASSY	AWX8345	AWX8350
	2..COMPOSITE V ASSY	AWX8354	AWX8355
	2..COMPONENT ASSY	AWX8359	AWX8360
	2..S VIDEO ASSY	AWX8356	AWX8357
	2..VIDEO SIDE ASSY	AWX8366	AWX8366
	2..MULTI CH I/O ASSY	AWX8410	AWX8352
NSP	1..POWER AMP ASSY	AWK7824	AWK7828
	2..TRANS 2-2 ASSY	AWX8371	AWX8371
	2..12V TRIGGER ASSY	AWX8395	Not used
	2..POWER AMP-R ASSY	AWX8404	AWX8404
	2..POWER AMP IN ASSY	AWX8405	AWX8405
	2..POWER PROTECT ASSY	AWX8407	AWX8407
	2..POWER AMP-L ASSY	AWX8403	AWX8403
	2..VH TR ASSY	AWX8411	AWX8411
	2..POSI 1 R ASSY	AWX8539	AWX8539
	2..POSI 1 L ASSY	AWX8536	AWX8536
	2..POSI 2 L ASSY	AWX8428	AWX8428
	1..DSP ASSY	AWX8414	AWX8414
	1..1394 ASSY	AWK7834	Not used

• CONTRAST OF PCB ASSEMBLIES

A MULTI CH I/O ASSY

AWX8410 and AWX8352 are constructed the same except for the following :

Mark	Symbol and Description	AWX8410	AWX8352
	IC604	BD3812F	Not used
	Q671	HN1C03FU(AB)	Not used
	C671- C674	CEAT100M50	Not used
	C675, C676	CCSRCH101J50	Not used
	C677, C678, C694	CKSRYB103K50	Not used
	C697, C698	CCSRCH331J50	Not used
	R671- R674	RS1/16S102J	Not used
	R675- R678	RS1/16S103J	Not used
	R679, R680	RS1/16S102J	Not used
	R681	RS1/16S104J	Not used
	JA605 2P PIN JACK	VKB1060	Not used

C COMPOSITE V ASSY

AWX8354 and AWX8355 are constructed the same except for the following :

Mark	Symbol and Description	AWX8354	AWX8355
	IC 721	NJM2279M	Not used
	IC 741	MM1093NF	Not used
	IC 742	TC90A49F	Not used
	Q731, Q743, Q744, Q745	2SC4081	Not used
	Q741,Q742	2SA1576A	Not used
	D721	DAN202K	Not used
	D741	1SS355	Not used
	C721	CCSRCH181J50	Not used
	C722, C723, C733, C741, C742, C744	CEAT101M16	Not used
	C724, C725, C726	CKSRYB473K25	Not used
	C727	CCSRCH220J50	Not used
	C728	CKSRYB224K16	Not used
	C731, C732, C745, C780	CKSRYB104K25	Not used
	C743, C746, C751, C756, C764, C767	CKSRYB103K50	Not used
	C769- C773, C775- C777	CKSRYB103K50	Not used
	C747	CCSRCH560J50	Not used
	C748	CEAT1R0M50	Not used
	C749	CKSRYB561K50	Not used
	C750, C752, C758	CEAT4R7M50	Not used
	C753, C755, C784	CCSRCH100D50	Not used
	C754	CKSRYB122K50	Not used
	C757	CCSRCH6R0D50	Not used
	C759	CKSRYB102K50	Not used
	C760	CCSRCH391J50	Not used
	C762	CKSRYB474K10	Not used
	C763, C765, C766, C768	CEAT101M16	Not used
	C774	CCSRCH181J50	Not used
	C781	CEAT470M16	Not used
	C782	CCSRCH101J50	Not used
	C783	CCSRCH390J50	Not used
	C785	CEAT102M10	Not used
	C796	CKSRYB105K6R3	Not used
	R721, R725, R765	RS1/16S750J	Not used
	R722- R724, R732, R733, R759, R760	RS1/16S102J	Not used
	R764, R784	RS1/16S102J	Not used
	R731	RS1/16S911J	Not used
	R738	RS1/16S202J	Not used
	R739	RS1/16S202J	RS1/16S0R0J

Mark	Symbol and Description	AWX8354	AWX8355
	R741	RS1/16S473J	Not used
	R742	RS1/16S183J	Not used
	R743	RS1/16S113J	Not used
	R744, R763	RS1/16S471J	Not used
	R745, R746	RS1/16S391J	Not used
	R747	RS1/16S105J	Not used
	R749, R750	RS1/16S103J	Not used
	R751	RS1/16S562J	Not used
	R752	RS1/16S361J	Not used
	R753	RS1/16S153J	Not used
	R754, R794- R798	RS1/16S0R0J	Not used
	R755	RS1/16S222J	Not used
	R756, R757, R761	RS1/16S101J	Not used
	R758, R762	RS1/16S821J	Not used
	R766, R781, R783, R785	Not used	RS1/16S0R0J
	L741 Coil	LCYA270J2520	Not used
	X741 Crystal Resonator	ASS1092	Not used
	JA721 1P PINJACK	VKB1063	Not used

L MAIN CONTROL ASSY

AWX8345 and AWX8350 are constructed the same except for the following :

Mark	Symbol and Description	AWX8345	AWX8350
	IC501	PD5957A8	PD5956A
	Q502	DTA124EUA	Not used
	C508	CKSRYB103K50	Not used
	R502, R559, R560	RS1/16S0R0J	Not used
	R523	RS1/16S473J	Not used
	R501	Not used	RS1/16S0R0J
	R524	RS1/16S102J	Not used
	R527	RS1/16S472J	Not used
	R553, R554	RS1/16S101J	Not used
	CN108 KR CONNECTOR	B8B-PH-K-S	Not used

O DISPLAY ASSY

AWX8388 and AWX8389 are constructed the same except for the following :

Mark	Symbol and Description	AWX8388	AWX8389
	IC3003	TC7W53FU	Not used
	Q3003	DTC124EUA	Not used
	Q3004	FMA1A	Not used
	D3005, D3007- D3009	1SS355	Not used
	C3009	CKSRYB153K50	Not used
	D3011 LED (BLUE)	SLR-343BBT	Not used
	R3008	RS1/16S223J	Not used
	R3009, R3010	RS1/16S103J	Not used
	R3011	RS1/16S392J	Not used
	R3019	RS1/16S0R0J	Not used
	R3054	RS1/16S101J	Not used
	R3065	Not used	RS1/16S473J

W REGULATOR ASSY

AWX8365 and AWX8369 are constructed the same except for the following :

Mark	Symbol and Description	AWX8365	AWX8369
	IC2509	NJM78M05FA	Not used
	IC2510	NJM78M09FA	Not used
	D2534, D2535	1SR154-400	Not used
	C2521, C2531	CKSRYB103K50	Not used
	C2530	CEAT470M35	Not used

Mark	Symbol and Description	AWX8365	AWX8369
	C2532	CEAT101M16	Not used
	C2533	CEAT102M10	Not used
	C2549	CEAT102M25	Not used
	C2550	CKSRYB104K16	Not used
	R2519, R2520	RS1/16S0R0J	Not used
	R2521	Not used	RS1/16S0R0J
	L2504 Inductor (47uH)	VTL1118	Not used
	CN2504 4P PLUG	KM200TA4	Not used
	2506 PCB BINDER	VEF1040	Not used

D S VIDEO ASSY

AWX8356 and AWX8357 are constructed the same except for the following :

Mark	Symbol and Description	AWX8356	AWX8357
	IC831, IC871	TK15420M	Not used
	IC881	LA7213	Not used
	Q871, Q872	2SC4081	Not used
	Q881	UN5212	Not used
	D881	1SS355	Not used
	C831, C832, C871, C872, C877, C881	CEAT101M16	Not used
	C883	CEAT101M16	Not used
	C833, C834, C873, C874	CKSRYB473K25	Not used
	C878	CKSRYB104K25	Not used
	C882	CEAT3R3M50	Not used
	C884	CEAT102M10	Not used
	R831- R834	RS1/16S102J	Not used
	R835, R836, R839, R840, R878, R891	RS1/16S0R0	Not used
	R845, R846, R876, R877	RS1/16S202J	Not used
	R847, R848	RS1/16S202J	RS1/16S0R0J
	R856	RS1/16S912J	RS1/16S221J
	R871, R872	RS1/16S222J	Not used
	R873	RS1/16S152J	Not used
	R874	RS1/16S182J	Not used
	R875	RS1/16S162J	Not used
	R881	RS1/16S331J	Not used
	R882	RS1/16S224J	Not used
	R883	RS1/16S472J	Not used
	R885, R886	RS1/16S103J	Not used
	R890, R893- R895, R899	Not used	RS1/16S0R0J

F COMPONENT ASSY

AWX8359 and AWX8360 are constructed the same except for the following :

Mark	Symbol and Description	AWX8359	AWX8360
	IC5021, IC5051, IC5052	TK15420M	Not used
	IC5022	TA1270BF	Not used
	IC5101	TA8772AN	Not used
	Q5101, Q5102	2SC4081	Not used
	Q5103, Q5104	UN5212	Not used
	D5071	1SS355	Not used
	C5021, C5022, C5027, C5051- C5054	CEAT101M16	Not used
	C5071, C5102	CEAT101M16	Not used
	C5023, C5024, C5055- C5058	CKSRYB473K25	Not used
	C5025, C5047- C5049 , C5109	CEAT100M50	Not used
	C5026, C5103, C5104, C5120, C5101	CKSRYB103K50	Not used
	C5028, C5029, C5031, C5032, C5038	CKSRYB104K25	Not used
	C5041- C5046, C5105- C5108, C5110	CKSRYB104K25	Not used
	C5116- C5119	CKSRYB104K25	Not used
	C5030, C5100	CEAT101M35	Not used

Mark	Symbol and Description	AWX8359	AWX8360
	C5033, C5034	CCSRCH120J50	Not used
	C5035	CKSRYB222K50	Not used
	C5036	CKSRYB224K10	Not used
	C5037, C5039	CEAT2R2M50	Not used
	C5040	CKSRYB223K25	Not used
	C5073	CEAT102M10	Not used
	C5111, C5112	CKSRYB474K10	Not used
	C5113- C5115	CEAT1R0RM50	Not used
	R5021, R5022, R5030, R5051, R5052	RS1/16S103J	Not used
	R5053, R5076, R5101	RS1/16S103J	Not used
	R5023, R5024, R5027, R5028, R5054	RS1/16S0R0J	Not used
	R5029	RS1/16S303J	Not used
	R5031	RS1/16S302J	Not used
	R5032	RS1/16S361J	Not used
	R5033	RS1/16S682J	Not used
	R5034	RS1/16S332J	Not used
	R5035, R5036	RS1/16S101J	Not used
	R5055, R5056	RS1/16S202J	Not used
	R5058, R5059	RS1/16S153J	Not used
	R5060, R5061	RS1/16S750J	Not used
	R5062	RS1/16S221J	Not used
	R5071, R5072	RS1/16S0R0J	Not used
	R5075, R5077, R5078	Not used	RS1/16S0R0J
	R5079, R5080	Not used	RS1/16S472J
	R5102- R5106	RS1/16S102J	Not used
	R5107, R5108	RS1/16S473J	Not used
	R5109	RS1/16S362J	Not used
	X5021 (4.43MHz)	ASS1092	Not used
	X5022 (3.56MHz)	ASS1091	Not used
	X5023 (503kHz)	ASS7036	Not used

AB SP/PS ASSY

AWX8402 and AWX8375 are constructed the same except for the following :

Mark	Symbol and Description	AWX8402	AWX8375
	C2051, C2052 (15000uF/71v)	ACH7219	ACH7218

• PARTS LIST FOR VSX-2014i

Mark	No.	Description	Part No.
		COMPLEX ASSY	
		OTHERS	
	Y15	BOARD IN JUMPER	ADX7418
	Y14	BOARD IN JUMPER	ADX7419
	J8	JUMPER WIRE	D15A04-100-2651
	J7	JUMPER WIRE	D15A05-075-2651
		SECONDARY ASSY	
		OTHERS	
	Y8	BOARD IN JUMPER	ADX7451
	Y9	BOARD IN JUMPER	ADX7452
	Y10	BOARD IN JUMPER	ADX7453
	Y11	BOARD IN JUMPER	ADX7454
	Y12	BOARD IN JUMPER	ADX7455
	Y13	BOARD IN JUMPER	ADX7461
	J2501	JUMPER WIRE 5P	D20PDD0520E
	J11, J18	JUMPER WIRE 4P	D20PDY0410E
	J14	JUMPER WIRE 4P	D20PDY0425E
	J19	JUMPER WIRE 7P	D20PDY0715E

Mark	No.	Description	Part No.
		POWER AMP ASSY	
		OTHERS	
	Y5	BOARD IN JUMPER	ADX7404
	Y6	BOARD IN JUMPER	ADX7456
	Y1	BOARD IN JUMPER	ADX7457
	Y3	BOARD IN JUMPER	ADX7458
	Y2	BOARD IN JUMPER	ADX7459
	Y4	BOARD IN JUMPER	ADX7460
	J13	JUMPER WIRE 5P	D20PDY0530E
	J22	JUMPER WIRE 6P	D20PDY0615E
	J12	JUMPER WIRE 7P	D20PDY0710E

A MULTI I/O ASSY

SEMICONDUCTORS

	IC604	BD3812F
	Q631, Q632, Q641, Q642	HN1C03FU
	Q651, Q652, Q661, Q662, Q671	HN1C03FU
	D691	UDZS5R1(B)

Mark No.	Description	Part No.
CAPACITORS		
C601-C604, C611-C614		CCSRCH101J50
C621-C624, C675, C676		CCSRCH101J50
C631, C632, C641, C642		CCSRCH331J50
C651, C652, C661, C662		CCSRCH331J50
C697, C698		CCSRCH331J50
C607, C608, C617, C618		CEAT100M50
C627, C628, C671-C674		CEAT100M50
C677, C678, C694-C696		CKSRYB103K50
RESISTORS		
All Resistors		RS1/16S###J
OTHERS		
601, 602	6P PIN JACK	AKB7089
JA604	2P PIN jACK	AKB7165
CN602	21P SOCKET	AKP7074
CN601	23P SOCKET	AKP7178
JA605	2P PIN JACK	VKB1060

B AUDIO CONNECT ASSY

OTHERS		
CN905	18P FFC CONNECTOR	52044-1845
CN904	21P PLUG	AKP7063
CN903	23P PLUG	AKP7064
CN902	21P SOCKET	AKP7074
CN901	23P SOCKET	AKP7178

C COMPOSITE V ASSY

SEMICONDUCTORS		
IC741		MM1093NF
IC721		NJM2279M
IC701		NJM2595M
IC731		TC74HC4052AF
IC742		TC90A49F
IC732		TK15420M
Q741, Q742		2SA1576A
Q731, Q743-Q745		2SC4081
D741		1SS355
D701, D702, D721		DAN202K
COILS AND FILTERS		
X741	CRYSTAL RESONATOR	ASS1092
L741		LCYA270J2520
CAPACITORS		
C753, C755, C784		CCSRCH100D50
C712, C782		CCSRCH101J50
C705, C706, C721, C774		CCSRCH181J50
C727		CCSRCH220J50
C711		CCSRCH221J50
C783		CCSRCH390J50
C760		CCSRCH391J50
C747		CCSRCH560J50
C757		CCSRCH6R0D50
C701-C704, C707, C708		CEAT101M16
C713, C714, C722, C723, C733		CEAT101M16
C736, C737, C741, C742, C744		CEAT101M16
C763, C765, C766, C768		CEAT101M16
C785		CEAT102M10
C748		CEAT1R0M50
C781		CEAT470M16
C750, C752, C758		CEAT4R7M50
C759		CKSRYB102K50
C715, C716, C743, C746, C751		CKSRYB103K50
C756, C764, C767, C769-C773		CKSRYB103K50
C775-C777		CKSRYB103K50
C731, C732, C745, C780		CKSRYB104K25
C796		CKSRYB105K6R3
C754		CKSRYB122K50
C717, C728		CKSRYB224K16
C709, C710, C724-C726		CKSRYB473K25
C734, C735, C738, C739		CKSRYB473K25
C762		CKSRYB474K10
C749		CKSRYB561K50
RESISTORS		
All Resistors		RS1/16S###J
OTHERS		
701-703	2P PIN JACK	AKB7017
CN701	13P SOCKET	AKP7070
CN751	10P SOCKET	KP200TA10L
JA721	1 PIN JACK	VKB1063

D S VIDEO ASSY

SEMICONDUCTORS		
IC881		LA7213
IC801, IC802		NJM2595M
IC851		PDC084B
IC841		TC74HC4052AF
IC831, IC842, IC871		TK15420M
Q852, Q871, Q872		2SC4081
Q881		UN5212
D881, D882		1SS355
D801, D802		DAN202K
D851		DAP202K
COILS AND FILTERS		
X851	CRYSTAL RESONATOR (14.32MHz)	ASS1056
L851, L852		LCYA100J2520
L853		LCYA330J2520
CAPACITORS		
C825, C826, C862		CCSRCH101J50
C855		CCSRCH150J50
C856		CCSRCH180J50
C811-C814		CCSRCH181J50
C857, C858		CCSRCH240J50
C866		CCSRCH330J50
C859		CCSRCH470J50
C805-C808, C815-C820		CEAT101M16
C831, C832, C843, C844		CEAT101M16
C851, C852, C864, C871, C872		CEAT101M16
C877, C881, C883		CEAT101M16
C884		CEAT102M10
C882		CEAT3R3M50
C891-C894		CKSRYB103K50
C801-C804, C809, C810, C878		CKSRYB104K25
C829, C830		CKSRYB221K50
C821-C824, C833, C834		CKSRYB473K25
C841, C842, C845, C846		CKSRYB473K25

Mark No.	Description	Part No.
	C853, C854, C860, C861	CKSRYB473K25
	C873, C874	CKSRYB473K25
	RESISTORS	
	All Resistors	RS1/16S###J
	OTHERS	
	CN802 17P FFC CONNECTOR	52044-1745
	CN811, CN812 4P MINI DIN SOCKET	AKP7043
	CN851 15P SOCKET	AKP7071
	CN801 17P SOCKET	AKP7072

E VIDEO SIDE ASSY

	OTHERS	
	CN892 15P PLUG	AKP7060
	CN891 10P PLUG	KM200TA10
	CN893 6P PLUG	KM200TA6

F COMPONENT ASSY

	SEMICONDUCTORS	
	IC5001	NJM2586M
	IC5022	TA1270BF
	IC5021, IC5051, IC5052	TK15420M
	IC5101	TA8772AN
	Q5101, Q5102	2SC4081
	Q5103, Q5104	UN5212
	D5001, D5002, D5071	1SS355
	D5003	DAN202K
	CAPACITORS	
	C5033, C5034	CCSRCH120J50
	C5025, C5047-C5049, C5109	CEAT100M50
	C5010-C5013, C5021, C5022, C5027	CEAT101M16
	C5051-C5054, C5071, C5102	CEAT101M16
	C5030, C5100	CEAT101M35
	C5073	CEAT102M10
	C5037, C5039	CEAT2R2M50
	C5026, C5101,C5103, C5104, C5120	CKSRYB103K50
	C5028, C5029, C5031, C5032, C5038	CKSRYB104K25
	C5041-C5046, C5105- C5108, C5110	CKSRYB104K25
	C5116- C5119, C5121	CKSRYB104K25
	C5035	CKSRYB222K50
	C5040	CKSRYB223K25
	C5036	CKSRYB224K10
	C5081-C5083	CKSRYB224K16
	C5014, C5015, C5023, C5024	CKSRYB473K25
	C5055-C5058	CKSRYB473K25
	C5111- C5112	CKSRYB474K10
	C5113- C5115	CEAT1R0M50
	RESISTORS	
	All Resistors	RS1/16S###J
	OTHERS	
	JA5001-JA5003 3P PIN JACK	AKB7124
	X5022 CRYSTAL RESONATOR	ASS1091
	X5021 CRYSTAL RESONATOR	ASS1092
	X5023 CERAMIC RESONATOR	ASS7036
	CN5051 6P SOCKET	KP200TA6L
	CN5001 7P SOCKET	KP200TA7L
	5001 PCB BINDER	VEF1040

Mark No.	Description	Part No.

L MAIN CONTROL ASSY

	SEMICONDUCTORS	
	IC381	BD3812F
	IC481	BU1924F
	IC451	BD3813KS
	IC101	BD3841FS
	IC501	PD5957A8
	IC382	TC74HC4052AF
	IC502	TC74VHC08FT
	IC504	TC74VHCT125AFT
	IC102-IC106, IC111, IC321, IC341	UPC4570G2-A
	IC361, IC401	UPC4570G2-A
	Q169, Q170, Q321-Q324	2SC3326
	Q341-Q344, Q361-Q364	2SC3326
	Q381-Q384	2SC3326
	Q175, Q229, Q230	2SK208
	Q502-Q505, Q516, Q517	DTA124EUA
	Q386	DTC124EUA
	Q511, Q512, Q483	DTC143EUA
	Q501	DTC143TK
	Q398, Q507, Q514, Q515	UMB1N
	Q172, Q176, Q235, Q506	UMD2N
	Q482	2SA1036K
	D175, D229, D230, D441, D442	1SS355
	D451, D473, D501-D503	1SS355
	D506-D512, D516-D519	1SS355
	D474, D475	DAN202K
	D191-D193	DAN217
	D504, D505	DAP202K
	D515	UDZS5R1(B)
	D443, D444	UDZS6R8(B)
	COILS AND FILTERS	
	X501 CERAMIC RESONATOR(15.7MHz)	ASS7032
	X481 CERAMIC RESONATOR	ASS7004
	L121, L475	ATL7002
	L476, L481	LFEA2R2J
	L471-L474	QTL1013
	CAPACITORS	
	C101-C120, C123-C128	CCSRCH101J50
	C131, C132, C151, C152	CCSRCH101J50
	C169, C170, C243, C244, C263	CCSRCH101J50
	C283, C284, C325, C326	CCSRCH101J50
	C345, C346, C365, C383, C384	CCSRCH101J50
	C405, C406, C457, C458	CCSRCH101J50
	C121, C122, C129, C130	CCSRCH220J50
	C205-C208, C245-C248, C265	CCSRCH331J50
	C267, C285-C288	CCSRCH331J50
	C203, C204	CCSRCH471J50
	C370	CEANP330M16
	C133-C150, C161, C162	CEAT100M50
	C209, C210, C213, C214	CEAT100M50
	C249, C250, C269, C270	CEAT100M50
	C289, C290, C451-C456, C517	CEAT100M50
	C327, C328, C347, C348	CEAT101M16
	C367, C368, C407, C408	CEAT101M16
	C507	CEAT102M6R3
	C181	CEAT221M6R3
	C201, C202, C241, C242, C487	CEAT2R2M50

Mark	No.	Description	Part No.
	C261, C262, C281, C282, C515		CEAT2R2M50
	C501		CEAT331M10
	C167, C168, C321, C322		CEAT470M25
	C329, C330, C341, C342		CEAT470M25
	C349, C350, C361, C362, C369		CEAT470M25
	C401, C402, C409, C410		CEAT470M25
	C443, C444		CEAT471M10
	C323, C324, C343, C344		CEAT4R7M50
	C363, C364, C387, C388		CEAT4R7M50
	C403, C404		CEAT4R7M50
	C506, C491		CKSRYB102K50
	C153, C154, C171, C172		CKSRYB103K50
	C191-C193, C215, C216		CKSRYB103K50
	C235, C236, C257, C258, C266		CKSRYB103K50
	C277, C278, C297, C298		CKSRYB103K50
	C331, C332, C351, C352		CKSRYB103K50
	C371, C372, C381, C382		CKSRYB103K50
	C385, C386, C391-C398		CKSRYB103K50
	C411, C412, C441, C442		CKSRYB103K50
	C465-C467, C471-C473, C476		CKSRYB103K50
	C502, C508, C514, C551		CKSRYB103K50
	C182, C237, C238, C459-C462		CKSRYB104K16
	C573		CKSRYB104K16
	C510		CKSRYB473K25
	C503		CKSRYB105K10
	C264		CKSRYB223K25
	C431-C438		CKSRYB223K50
	C572		CKSRYB224K16
	C251, C252, C271, C272		CKSRYB472K50
	C291, C292, C366, C463, C464		CKSRYB472K50
	C509, C485, C506		CKSRYB472K50
	C512, C513		CKSRYB473K16
	C268		CKSRYB562K50
	C489		CCSRCH561J50
	C475		PCH1132
	C490		CEAT101M10
	C492, R493		CCSRCH270J50

RESISTORS

	R441, R442	RS1LMF101J
	Other Resistors	RS1/16S###J

OTHERS

	CN501 10P FFC CONNECTOR	52045-1045
	CN106, CN107 15P FFC CONNECTOR	52045-1545
	CN101 26P FFC CONNECTOR	52045-2645
	CN116-CN119 4P PIN JACK	AKB7015
	CN103 21P PLUG	AKP7063
	CN102, CN104, CN105 23P PLUG	AKP7064
	CN111, CN112, CN115 23P SOCKET	AKP7178
	CN108 KR CONNECTOR	B8B-PH-K
	CN114 17P SOCKET	KP200TA17L
	CN113 4P SOCKET	KP200TA4L
	101, 102 PCB BINDER	VEF1040

X TRANS 2-1 ASSY

SEMICONDUCTORS

	IC2201, IC2202	AEK7021
	Q2203	RN1901
	Q2204, Q2205	UMD2N
⚠	D2216, D2217	1SR154-400
⚠	D2201	S1WB(A)60SD
	D2203-D2206	UDZS10(B)
	D2207, D2208	UDZS10(B)
	D2202, D2215	UDZS13(B)
	D2209, D2210	UDZS7R5(B)
	D2211-D2214	UDZS9R1(B)

CAPACITORS

	C2202, C2203	ACE7037
	C2215	CEANP470M50
	C2209, C2210	CEAT101M63
	C2213, C2214	CEAT221M63
	C2216	CEAT470M50
	C2207, C2208	CEAT471M2A

RESISTORS

⚠	R2207, R2208	RD1/2LMF332J
⚠	R2202, R2203	RD1/4MUF4R7J
	R2210	RD1/4MUF681J
⚠	R2205, R2206	RS1LMF472J
	Other Resistors	RS1/16S###J

OTHERS

	CN2202 4P JUMPER CONNECTOR	52147-0410
	CN2202 5P JUMPER CONNECTOR	52147-0510
	CN2205 6P JUMPER CONNECTOR	52147-0610
	H2201-H2204 FUSE CLIP	AKR7001

W REGULATOR ASSY

SEMICONDUCTORS

	IC2511	NJM2100M
⚠	IC2506, IC2507, IC2509	NJM78M05FA
⚠	IC2510	NJM78M09FA
⚠	IC2501	NJM78M12FA
⚠	IC2503	NJM78M56FA
⚠	IC2504	NJM79M05FA
⚠	IC2502	NJM79M12FA
⚠	Q2502	UMD2N
⚠	Q2501	2SC4793D1
	Q2504	DTC124EUA
⚠	D2501-D2504,D2514,D2515	1SR154-400
⚠	D2534,D2535	1SR154-400
	D2513	1SS355
⚠	D2507,D2521	D3SBA20(B)
	D2505,D2506,D2511,D2512	RB501V-40
	D2518	UDZS27B
	D2527-D2529,D2532,D2533	UDZS6.2B

CAPACITORS

	C2517, C2518	CEANP102M16
	C2545, C2546, C2519	CEAT100M50
	C2515, C2516, C2527, C2536, C2532	CEAT101M16
	C2549	CEAT102M25
	C2533	CEAT102M10
	C2525	CEAT221M16
	C2509,C2510	CEAT221M25
	C2512	CEAT222M16
	C2529	CEAT222M35
	C2511	CEAT332M16
	C2501,C2502	CEAT332M25
	C2520	CEANP470M25

Mark	No.	Description	Part No.
	C2530		CEAT470M35
	C2537		CEAT470M50
	C2523		CEAT472M16
	C2541,C2542		CEAT4R7M50
	C2507,C2508,C2513,C2514,C2521		CKSRYB103K50
	C2524,C2526,C2539,C2547,C2555		CKSRYB103K50
	C2531		CKSRYB103K50
	C2553,C2554		CKSRYB104K25
	C2550		CKSRYB104K16

COILS AND FILTERS

	L2504 (47uH)		VTL1118

RESISTORS

	All Resistors		RS1/16S###J

OTHERS

	2502	4P CABLE HOLDER	51048-0400
	2503,2504	5P CABLE HOLDER	51048-0500
	CN2505	7P JUMPER CONNECTOR	52147-0710
	CN2501	13P PLUG	AKP7059
	CN2524	15P PLUG	AKP7060
	CN2502	17P PLUG	AKP7061
	CN2521	19P PLUG	AKP7062
	CN2511,CN2512,CN2515,CN2522	23P PLUG	AKP7064
	H2501-H2504	FUSE CLIP	AKR7001
	CN2514	17P PLUG	KM200TA17
	CN2504,CN2525	4P PLUG	KM200TA4
	CN2503	7P PLUG	KM200TA7
	2506,2507	PCB BINDER	VEF1040
	KN2501,KN2502	WRAPPING TERMINAL	VNF1084

AB SP/PS ASSY

SEMICONDUCTORS

	Q2001-Q2005		DTC114TUA
	D2001-D2010		1SS355

COILS AND FILTERS

	L2001-L2007		ATH1053

SWITCHES AND RELAYS

	RY2001-RY2005		XSR3002

CAPACITORS

	C2051, C2052		ACH7219
	C2023		CEAT101M50
	C2001-C2014		CFTLA224J50
	C2025-C2029		CKSRYB102K50
	C2015-C2019, C2021, C2022		CQMBA103J50

RESISTORS

	R2017, R2018		RS1LMF471J
	R2051, R2052		RD1/4MUF473J
⚠	R2008-R2014		RS1/2LMF4R7J
⚠	R2001-R2007		RS1LMF2R2J
⚠	R2015, R2016		RS2LMF331J

OTHERS

	2005	4P CABLE HOLDER	51048-0400
	CN2004	12P FFC CONNECTOR	52045-1245
	CN2113	6P SPEAKER TERMINAL	AKE7108
	CN2114, CN2115	4P SPEAKER TERMINAL	AKE7110
	CN2003, CN2006	5P PLUG	KM200TA5
	CN2002	3P POST HEDDER	AKC7002
	2001	4P POST HEDDER	AKC7003
	CN2102	2P POST HEDDER	AKC7005
	CN2101	2P POST HEDDER	AKC7008
	CN2103	2P POST HEDDER	AKC7009
	CN2104	2P POST HEDDER	AKC7010

Z DIODE ASSY

SEMICONDUCTORS

⚠	D2241, D2242		D5SBA20(B)

O DISPLAY ASSY

SEMICONDUCTORS

	IC3001		PE5403A
	IC3002		RPM7140-H9
	IC3003		TC7W53FU
	Q3001		2SA1576A
	Q3002, Q3003, Q3005		DTC124EUA
	Q3004		FMA1A
	D3002-D3009		1SS355
	D3001		DAN202K
	D3010		SLI-343DCW(STU)
	D3011		SLR-343BBT(GHJ)

COILS AND FILTERS

	L3001		LFEA2R2J
	X3001	CERAMIC RESONATOR(5MHz)	VSS1142

SWITCHES AND RELAYS

	S3001- S3016		VSG1024

CAPACITORS

	C3103- C3105, C3107		CCSRCH471J50
	C3007		CEAT101M6R3
	C3003		CEAT221M6R3
	C3018		CEAT470M50
	C3019-C3022		CKSRYB102K50
	C3001, C3002, C3006, C3008		CKSRYB103K50
	C3016, C3017, C3032		CKSRYB103K50
	C3011, C3012		CKSRYB104K25
	C3009		CKSRYB153K50
	C3106		XCH3011

RESISTORS

⚠	R3056		RS1/16S104J
	Other Resistors		RS1/16S###J

OTHERS

	3002	4P CABLE HOLDER	51063-0405
	3001	5P CABLE HOLDER	51063-0505
	CN3001	26P FFC CONNECTOR	52045-2645
	V3001	FL TUBE	AAV7099
	3003	FL HOLDER	VNF1096

N VOLUME ASSY

SWITCHES AND RELAYS

	S3201		ASX7004
	S3202-S3209		VSG1024

Mark	No.	Description	Part No.
CAPACITORS			
	C3201, C3202		CKSRYB103K50
RESISTORS			
	All Resistors		RS1/16S###J
OTHERS			
	3201	5P CABLE HOLDER	51063-0505

P MULTI JOG ASSY

Mark	No.	Description	Part No.
SWITCHES AND RELAYS			
	S3251		ASX7031
	S3252-S3254		VSG1024
CAPACITORS			
	C3251, C3252		CKSRYB103K50
RESISTORS			
	Other Resistors		RS1/16S###J
OTHERS			
	3251	4P CABLE HOLDER	51063-0405

H HEADPHONE ASSY

Mark	No.	Description	Part No.
CAPACITORS			
	C3303		CCSRCH471J50
	C3304		CKSRYB103K50
	C3305		CKSRYB104K25
	C3301, C3302		CKSRYB392K50
RESISTORS			
	All Resistors		RS1/16S###J
OTHERS			
	CN3301	4P JUMPER CONNECTOR	52147-0410
	3301	PHONE JACK	AKN7029
	KN3301	WRAPPING TERMINAL	VNF1084

I FRONT-IN ASSY

Mark	No.	Description	Part No.
SEMICONDUCTORS			
	IC3351		UPC4570G2-A
	Q3351		HN1C01FU
	D3354		DAN217
	D3351-D3353		UDZS5R1(B)
COILS AND FILTERS			
	L3353		QTL1013
CAPACITORS			
	C3353, C3385, C3386		CCSRCH101J50
	C3381, C3382		CCSRCH221J50
	C3354		CCSRCH330J50
	C3351		CCSRCH471J50
	C3352, C3355, C3357, C3361, C3362		CEAT100M50
	C3391, C3392		CEAT330M25
	C3372, C3373		CEAT470M25
	C3383, C3384, C3387, C3388		CEJQ100M16
	C3396		CKSRYB102K50
	C3359, C3360, C3365, C3376		CKSRYB103K50
	C3389, C3390, C3394		CKSRYB103K50
	C3366, C3367, C3371, C3378, C3395		CKSRYB104K25
RESISTORS			
	All Resistors		RS1/16S###J
OTHERS			
	CN3351	15P PLUG	AKP7060
	JA3352	FRONT AV INPUT	AKX7019
	JA3351	REMOTE CONTROL JACK	RKN1004
	KN3351, KN3352	WRAPPING TERMINAL	VNF1084

AF PRIMARY ASSY

Mark	No.	Description	Part No.
SEMICONDUCTORS			
⚠	IC1001		NJM78M56FA
	Q1001		DTC143EUA
	D1002, D1004, D1005		1SS355
⚠	D1001		S1WB(A)60SD
	D1003		UDZS5R1(B)
COILS AND FILTERS			
⚠	L1001	LINE FILTER	XTF3004
TRANSFORMERS			
⚠	T1001		ATT7040
SWITCHES AND RELAYS			
⚠	RY1001		XSR3003
CAPACITORS			
⚠	C1002,C1003 (0.01 microF/275V)		ACE7013
	C1008		CEAT102M25
	C1009		CEAT221M25
	C1004		CQMBA103J50
RESISTORS			
	R1002		RD1/2VM221J
	Other Resistors		RS1/16S###J
OTHERS			
⚠	CN1005	1P AC OUTLET	AKP1034
	H1001, H1002	FUSE CLIP	AKR7001
	CN1002, CN1003	5P SOCKET	KP200TA5L
⚠	CN1001	AC CORD SOCKET	RKP1751
	KN1001	WRAPPING TERMINAL	VNF1084

G OPTICAL-IN ASSY

Mark	No.	Description	Part No.
COILS AND FILTERS			
	L961		QTL1013
CAPACITORS			
	C964		CEAT101M16
	C968		CKSRYB104K25
	C961-C963, C965		CKSRYF104Z25
RESISTORS			
	Other Resistors		RS1/16S###J
OTHERS			
	CN961	CONNECTOR	CKS3824
	JA961, JA962	OPTICAL LINK IN	GP1FA513RZ
	JA963	OPTICAL LINK OUT	GP1FA513TZ
	961	SCREW PLATE	VNE1948

Mark	No.	Description	Part No.

AC REAR TOP ASSY

SEMICONDUCTORS

	Q951	2SD1858X
	Q952	2SC4081
	D951, D953	1SS355
	D952	UDZS10(B)

COILS AND FILTERS

	L951-L955	QTL1013

CAPACITORS

	C956	CEAT101M16
	C957	CKSRYB103K50
	C953, C958	CKSRYB104K25

RESISTORS

	Other Resistors	RS1/16S###J

OTHERS

	CN955	12P FFC CONNECTOR	52044-1245
	CN953	17P FFC CONNECTOR	52044-1745
	CN954	11P FFC CONNECTOR	52045-1145
	CN951, CN952	23P SOCKET	AKP7075
	951	SCREW PLATE	VNE1948
	JA951, JA952	4P MINI JACK + SW	XKN3015

J FRONT-IN CONNECT ASSY

CAPACITORS

	C3341, C3342	CKSRYB104K25

OTHERS

	CN3342	15P FFC CONNECTOR	52045-1545
	CN3341	15P SOCKET	AKP7071
	KN3341	WRAPPING TERMINAL	VNF1084

AD TRANS SIDE ASSY

OTHERS

	2302	4P CABLE HOLDER	51048-0400
	2303	7P CABLE HOLDER	51048-0700
	CN2304	4P JUMPER CONNECTOR	52147-0410
	CN2302	7P JUMPER CONNECTOR	52147-0710

Y TRANS 2-2 ASSY

SEMICONDUCTORS

⚠	IC2253	AEK7018
⚠	IC2251, IC2252	AEK7022

CAPACITORS

	C2251-C2253	CQMBA104J50

RESISTORS

⚠	R2251	RD1/4MUF100J
⚠	R2252	RD1/4MUF4R7J

OTHERS

	2250	7P CABLE HOLDER	51048-0700

Mark	No.	Description	Part No.

K 12V TRIGGER ASSY(VSX-2014i Only)

SEMICONDUCTORS

⚠	IC982	NJM78M12FA
	IC981	SP232AEN
	Q984	2SA1037K
	Q983	2SB1188
	Q991	2SC1740S
	Q982	DTC124EUA
	D981, D991, D992	1SS355
	D982	UDZS5R1(B)

COILS AND FILTERS

	L992	LAU1R0J

CAPACITORS

	C998	CCSRCH331J50
	C983	CEAT100M50
	C991	CEAT101M16
	C993-C996	CEAT1R0M50
	C989	CEATR10M50
	C981, C982, C984-C986, C992	CKSRYB103K50
	C997	CKSRYB103K50

RESISTORS

	Aii Resistors	RS1/16S###J

OTHERS

	CN983	9P D-SUB SOCKET	AKP1213
	CN982	KR CONNECTOR	B8B-PH-K
	CN981	4P SOCKET	KP200TA4L
	JA981, JA983	REMOTE CONTROL JACK	RKN1004
	JA982	REMOTE CONTROL JACK	RKN1026
	981	SCREW PLATE	VNE1948

U POWER AMP-R ASSY

SEMICONDUCTORS

⚠	IC4151, IC4251, IC4351	PA9010A
⚠	IC4152, IC4252, IC4352, IC4452	PBD001A
⚠	IC4153, IC4253, IC4353	PBD002A
	Q4152, Q4252, Q4352	2SA1255
	Q4151, Q4251, Q4351	2SC3326
	Q4403, Q4404	2SC4081
	D4152, D4154-D4158, D4252	1SS355
	D4254-D4258, D4352, D4354-D4358	1SS355
	D4151, D4153, D4251, D4253, D4351	UDZS10(B)
	D4353	UDZS10(B)

CAPACITORS

	C4156, C4157, C4256, C4257	ACG7041
	C4356, C4357	ACG7041
	C4152, C4252, C4352	CCSRCH221J50
	C4162, C4163, C4262, C4263	CCSRCH6R0D50
	C4362, C4363	CCSRCH6R0D50
	C4164, C4264, C4364	CEANP2R2M50
	C4405	CEAT331M10
	C4403, C4404	CEAT331M2A
	C4160, C4161, C4260, C4261	CEHAT100M2A
	C4360, C4361	CEHAT100M2A
	C4151, C4251, C4351	CEHAT100M50
	C4153, C4253, C4353	CEHAT331M10

Mark	No.	Description	Part No.
	C4158, C4159, C4258, C4259		CEHAT470M25
	C4358, C4359		CEHAT470M25
	C4154, C4155, C4254, C4255		CEHAT470M63
	C4354, C4355		CEHAT470M63

RESISTORS

⚠	R4169, R4269, R4369	ACN7121
⚠	R4181, R4182, R4281, R4282	ACN7132
⚠	R4381, R4382, R4481	ACN7132
	R4574	RD1/2VM1R0J
	R4155, R4255, R4355	RN1/10SE1201D
	R4162, R4262, R4362	RN1/10SE3302D
	Other Resistors	RS1/16S###J

OTHERS

CN4552	11P SOCKET	AKP7069
CN4551	13P SOCKET	AKP7070
CN4553	2P CONNECTOR	B02B-XASK-1
CN4452	6P PLUG	KM250NA6L
KN4403, KN4404	WRAPPING TERMINAL	VNF1084
J4152- J4154	JUMPER WIRE 58	ADB7021
J4151, J4155	JUMPER WIRE 70	ADB7022

Q POWER AMP IN ASSY

SEMICONDUCTORS

IC4451	PA9010A
Q4452	2SA1255
Q4451	2SC3326
D4453-D4458	1SS355
D4451, D4452	UDZS10(B)

CAPACITORS

C4456, C4457	ACG7041
C4452	CCSRCH221J50
C4462, C4463	CCSRCH6R0D50
C4464	CEANP2R2M50
C4460, C4461	CEHAT100M2A
C4451	CEHAT100M50
C4453	CEHAT331M10
C4458, C4459	CEHAT470M25
C4454, C4455	CEHAT470M63

RESISTORS

R4469 (0.18 ohm/5W)	ACN7121
R4455	RN1/10SE1201D
R4462	RN1/10SE3302D
Other Resistors	RS1/16S###J

OTHERS

4001	5P CABLE HOLDER	51048-0500
CN4003	18P FFC CONNECTOR	52044-1845
CN4001, CN4002	13P PLUG	AKP7059
CN4401, CN4451	6P SOCKET	KP250NA6

R POWER PROTECT ASSY

SEMICONDUCTORS

IC4051	NJM4558MD
Q4051	2SC4081
Q4052	UMB1N
Q4053	DTC124EUA
Q4054	UMH1N

Mark	No.	Description	Part No.
	D4051, D4053		1SS355

CAPACITORS

C4054, C4055, C4056	CKSRYB103K50
C4052, C4053	CKSRYB104K25
C4051	CKSRYB223K50

RESISTORS

All Resistors	RS1/16S###J

OTHERS

CN4053	15P FFC CONNECTOR	52044-1545
CN4051, CN4052	11P PLUG	AKP7058
CN4054	3P PIN POST	S3B-EH

S POWER AMP-L ASSY

SEMICONDUCTORS

⚠ IC4101, IC4201, IC4301	PA9010A
⚠ IC4102, IC4202, IC4302	PBD001A
⚠ IC4103, IC4203, IC4303, IC4453	PBD002A
Q4102, Q4202, Q4302	2SA1255
Q4101, Q4201, Q4301	2SC3326
D4102, D4104-D4108, D4202	1SS355
D4204-D4208, D4302, D4304-D4308	1SS355
D4101, D4103, D4201, D4203, D4301	UDZS10(B)
D4303	UDZS10(B)

CAPACITORS

C4106, C4107, C4206, C4207	ACG7041
C4306, C4307 (220uF/100v)	ACG7041
C4102, C4202, C4302	CCSRCH221J50
C4112, C4113, C4212, C4213	CCSRCH6R0D50
C4312, C4313	CCSRCH6R0D50
C4114, C4214, C4314	CEANP2R2M50
C4401, C4402	CEAT331M2A
C4110, C4111, C4210, C4211	CEHAT100M2A
C4310, C4311	CEHAT100M2A
C4101, C4201, C4301	CEHAT100M50
C4103, C4203, C4303	CEHAT331M10
C4108, C4109, C4208, C4209	CEHAT470M25
C4308, C4309	CEHAT470M25
C4104, C4105, C4204, C4205	CEHAT470M63
C4304, C4305	CEHAT470M63

RESISTORS

⚠ R4119, R4219, R4319 (0.18 ohm/5W)	ACN7121
⚠ R4131, R4132, R4231, R4232	ACN7132
⚠ R4331, R4332, R4482 (0.047 ohm)	ACN7132
R4573	RD1/2VM1R0J
R4105, R4205, R4305	RN1/10SE1201D
R4112, R4212, R4312	RN1/10SE3302D
Other Resistors	RS1/16S###J

OTHERS

CN4502	11P SOCKET	AKP7069
CN4501	13P SOCKET	AKP7070
CN4503	2P CONNECTOR	B02B-XASK-1
CN4504	2P CONNECTOR	B02B-XASK-1
CN4402	6P PLUG	KM250NA6L
KN4401, KN4402	WRAPPING TERMINAL	VNF1084
J4101,J4104,J4105	JUMPER WIRE 58	ADB7021
J4102, J4103	JUMPER WIRE 70	ADB7022

Mark	No.	Description	Part No.

AA VH TR ASSY

SEMICONDUCTORS

⚠	Q2231	2SA1514K
⚠	Q2233	2SA1837D1
⚠	Q2232	2SC3906K
⚠	Q2234	2SC4793D1
⚠	D2231, D2232	1SR154-400

RESISTORS

	All Resistors	RS1/16S###J

OTHERS

	2205 6P CABLE HOLDER	51048-0600

M DSP ASSY

SEMICONDUCTORS

	IC601	AK4114VQ
	IC701	AK4628VQE
	IC801	DSPA56371AF180
⚠	IC902	LM1117DT-ADJ
⚠	IC901	NJM2391DL1-33
	IC851	PDL018A8
	IC501	TC74HCU04AF
	IC551	TC74VHC157FT
	IC952	TC74VHCT244AFT
	IC871	TC7WH125FU
	IC951	TC7WH34FU
	IC802	TC7WU04FU
	Q551	UMD2N
	Q801	UN5212
	D553, D702	DAN202K
	D551, D701	DAP202K
	D901, D902	UDZS5R6(B)

COILS AND FILTERS

	L802, L803, L901-L903 CHIP FERRITE BEAD	ATL7002
	L501-L503, L551, L601, L602	QTL1013
	L605, L701, L702, L801, L804 CHIP SOLID INDUCTOR	QTL1013
	L851, L871, L951, L952	QTL1013
	X801 CRYSTAL RESONATOR (20MHz)	VSS1171
	X601 CRYSTAL RESONATOR (24.576MHz)	XSS3003

CAPACITORS

	C612, C613	CCSRCH100D50
	C705	CCSRCH101J50
	C505, C506	CCSRCH470J50
	C511, C552, C605, C608, C620	CCSRCH471J50
	C702, C707-C714, C717, C801	CCSRCH471J50
	C803, C805, C807, C809, C814	CCSRCH471J50
	C818, C821, C823, C826, C828	CCSRCH471J50
	C830, C832, C851, C871, C916	CCSRCH471J50
	C919, C951, C954	CCSRCH471J50
	C816, C817	CCSRCH8R0D50
	C953, C956	CEVW100M16
	C513, C703, C715, C834, C835	CEVW101M16
	C908, C909	CEVW101M16
	C607, C618, C718	CEVW470M6R3
	C617	CKSRYB102K50
	C503, C504, C556, C701, C820	CKSRYB103K50
	C825, C917, C920	CKSRYB103K50
	C551, C553-C555, C557, C606	CKSRYB104K16
	C609, C614, C619, C704, C706	CKSRYB104K16
	C716, C720, C802, C804, C806	CKSRYB104K16
	C808, C810, C815, C819, C822	CKSRYB104K16
	C824, C827, C829, C831, C833	CKSRYB104K16
	C852, C872, C907, C918, C952	CKSRYB104K16
	C955	CKSRYB104K16
	C512	CKSRYB105K6R3
	C621	CKSRYB474K10

RESISTORS

	R802	RAB4C101J
	R962, R970	RAB4C104J
	R628	RS1/16S1802F
	Other Resistors	RS1/16S###J

OTHERS

	JA501 2P PIN JACK	AKB7131
	CN901 15P SOCKET	AKP7071
	CN701 19P SOCKET	AKP7073
	CN951 23P SOCKET	AKP7075
	CN601 10P FFC CONNECTOR	VKN1414
	CN551 22P FFC CONNECTOR	VKN1426

AG 1394 ASSY(VSX-2014i Only)

SEMICONDUCTORS

	IC302	K4S641632H-TC75
⚠	IC1	NJM2391DL1-33
	IC303	NJU7093AF
	IC101	PD5787A
	IC301	PD8112A
	IC103	PST9245
⚠	IC410	S-L2980A25MC-C6K
	IC401	SM5819AF
	IC405	TC74VHC541FT
	IC104	TC74VHCT125AFT
	IC205	TC7SH08FU
	IC404	TC7SZ125FU
	IC409	TC7SZ126FU
	IC201	TSB43CA42ZGW
	Q101, Q301	DTA124EUA
	Q401	DTA143EUA
	D102	RB501V-40

COILS AND FILTERS

⚠	L204-L207	ATH7015
	L1, L101, L201-L203	ATL7002
	L301, L302, L401, L403-L405	ATL7002

CAPACITORS

	C329 (10u/6.3V)	ACG7046
	C2, C401, C428 (220u/6.3V)	ACH7195
	C242, C243	CCSRCH221J50
	C402	CCSRCH471J50
	C103, C206, C217, C232, C304	CEVW101M16
	C321, C419	CEVW101M16

Mark	No.	Description	Part No.
	C113, C211, C213, C215, C216		CKSRYB102K50
	C310, C324		CKSRYB102K50
	C101, C111		CKSRYB103K50
	C1, C102, C104-C110		CKSRYB104K16
	C201-C205, C207, C209, C210		CKSRYB104K16
	C212, C214, C218-C226, C235		CKSRYB104K16
	C241, C246-C249, C301-C303		CKSRYB104K16
	C305, C309, C311, C315-C320		CKSRYB104K16
	C322, C323, C325, C327, C333		CKSRYB104K16
	C404, C405, C408-C412		CKSRYB104K16
	C415, C416, C420, C424, C427		CKSRYB104K16
	C244, C245, C326		CKSRYB105K6R3
	C330		CKSRYB472K50
	C328		CKSRYB474K10
RESISTORS			
	R119, R127-R130, R205		RAB4C101J
	R230-R233, R245, R246, R445		RAB4C101J
	R122		RAB4C103J
	R407		RAB4C221J
	R308, R339, R340, R343-R347		RAB4C470J
	R350		RAB4C470J
	R135-R138, R206, R216		RAB4C472J
	R220, R221, R223, R234		RAB4C472J
	R238-R240		RAB4C472J
	R302, R402		RAB4C680J
	R275, R276		RS1/16S5101F
	R267-R274		RS1/16S56R0D
	R213		RS1/16S6341D
	Other Resistors		RS1/16S###J
OTHERS			
	X101 (6.14MHz)		VSS1179
	X302 (22.5792MHz)		ASS7054
	X201 (24.5760MHz)		ASS7055
	CN101 7P CONNECTOR		RKN1048
	CN402 10P CONNECTOR		VKN1414
	CN401 22P CONNECTOR		VKN1426
	JA201, JA202 1394 TERMINAL		VKN1800

V POSI 1 R ASSY

OTHERS

	J4551	ADX7471
⚠	TH4503	PTFM04BD222Q2N34B0

T POSI 1 L ASSY

OTHERS

	J4501	ADX7471
⚠	TH4501	PTFM04BH222Q2N34B0

AH POSI 2 L ASSY

OTHERS

	J4502	ADX7471
⚠	TH4502	PTFM04BD222Q2N34B0

FM/AM TUNER UNIT

FM/AM TUNER UNIT has no service part.

Mark	No.	Description	Part No.

6. ADJUSTMENT

There is no information to be shown in this chapter.

7. GENERAL INFORMATION

7.1 DIAGNOSIS

7.1.1 PROTECTION CIRCUIT CONTROL SPECIFICATION

Microcomputer-related ports

DC_PROT (pin 74 of IC501: MAIN CONTROL Assy)
Input port : For DC detection
OL_DET (pin 73 of IC501: MAIN CONTROL Assy)
Input port : To detect overloading at the amplifier (Interrupt port)

FAN_STOP (pin 92 of IC501: MAIN CONTROL Assy)
Input port : To detect Fan forced stop
FAN_DRIVE (pin 91 of IC501: MAIN CONTROL Assy)
: For Fan on/off
TEMP2 (pin 44 of IC3001: DISPLAY Assy)
Input port : To detect temperature
12V_DET (pin 41 of IC3001: DISPLAY Assy)
Input port : To detect 12V trigger

The following control processes are activated immediately before the relay system is turned on upon power-on. The time is 4.8 seconds after power-on. (Control of the relay system is enabled 5.2 seconds after power-on.)
Only DC detection is enabled 2 seconds after power-on to activate it before other protection functions.

① DC detection (defect detection)

Only DC detection is enabled 2 seconds after power-on.
If there is a fault in the power amplifier or a high-level signal lower than5 Hz is input, the DC_PROT port becomes "L"
Detecting "L" the microcomputer performs the following operations:

1. System muting on
2. Speaker relay off (Control with the display microcomputer)

The warning indication "AMP ERR" appears on the FL display.

If this status continues for more than 3 seconds, the power is turned off (for Standby mode).
Do not accept the key input afterward.
(Flash it always till turns the primary side off.)
If the port becomes "H" within 3 seconds, the unit resets automatically.

DC_PROT port performs the chattering check for 1 msec.
In addition, there is the case that detection delays for maximum 20 msec because performs monitor of DC_PROT port with a main loop.
Even if turns the primary side off and turns on once again.
If detects DC once and turned the power off, do not accept the key input afterward.
However, power on is possible when the following key was pressed to be able to key input in the protection line and service.

1. Test mode (remote control code : A55F)
2. When the ENTER key and VIDEO 2 key are both held pressed for 2 seconds.
   (Be effective when turned the power off by DC detection regarding 2.)

② Overload detection (abnormality detection)

If the speaker terminals are short-circuited or low-load driving is detected, the OL_DET port becomes "L"
Detecting "L" edge interrupt in an interrupt process, the microcomputer performs the following operations:

1. System muting on
2. Speaker relay off (Control with the display microcomputer)
3. Power off (Standby mode)

③ Fan stop detection

If the fan is forcibly stopped, the FAN_STOP port becomes "L"
Detecting "L" the microcomputer performs the following operations:

1. System muting on
2. Protection relays off

The warning indication "FAN STOP" appears (flashing) on the FL display.
If this status continues for more than 3 seconds, the power is turned off (for Standby mode).
If the port becomes "H" within 3 seconds, the unit resets automatically.
FAN_STOP port performs the chattering check for 7 msec.
In addition, there is the case that detection delays for maximum 20 msec because performs monitor of FAN_STOP port with a main loop.

④ Diagnostic mode

This mode is only for servicing and checking the circuit design, and not open to users.
When the VIDEO 1 key and ENTER key are both held pressed for 2 seconds in Standby mode, the power is turned on, and the number of times of each defect or Speaker relay off by abnormality detection is sequentially displayed on the FL display.
Displayed items:

- DC detection
- Overload detection
- Fan detection
- Temperature detection

Hold the VIDEO 1 key and ENTER key pressed for 2 seconds in Standby mode.

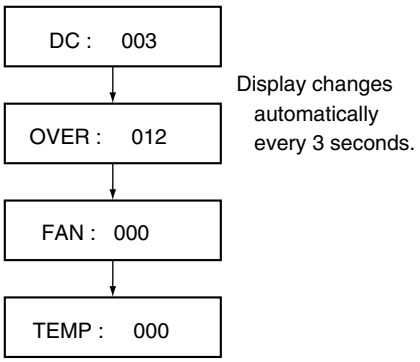

● Protection Process List

Item	Detection Method	Process	Warning Indication	Remarks
DC detection	Detects when the DC_PROT port becomes "L".	Turns muting on and speaker relay off, then turns off the power after 3 seconds.	Flashing "AMP ERR" for 3 seconds.	If the power is turned off, flashes the MCACC LED. Do not accept the POWER key. If the DC_DET port becomes "H" within 3 seconds, the unit resets automatically.
Overload detection	Detects when the OL_DET port becomes "L" (checks by interrupt).	Turns muting on and speaker relay off, and immediately turns off the power.	None	
Fan stop	Detects when the FAN_STOP port becomes "L".	Turns muting on and speaker relay off, then turns off the power after 3 seconds.	Flashing "FAN STOP" for 3 seconds	If the FAN_DET port becomes "H" within 3 seconds, the unit resets automatically. After the power off, the key input is possible once again.
Thermal shut down	Detects when the TEMP2 port becomes "H".	Turns muting on and speaker relay off, then turns off the power after 3 seconds.	Flashing "OVERHEAT" for 3 seconds	If the TEMP2 port becomes "L" within 3 seconds, the unit resets automatically. After the power off, the key input is possible once again.
12V trigger short detection	Detects when the 12V_DET port becomes "H".	Turns 12V_TRG port to "L", then turns off the the 12V output.	Flashing "12V TRG ERR"	Only a fan that is assigned 12V TRIG is valid. Release the FL indication with the power on/off.

• DC Detection circuit

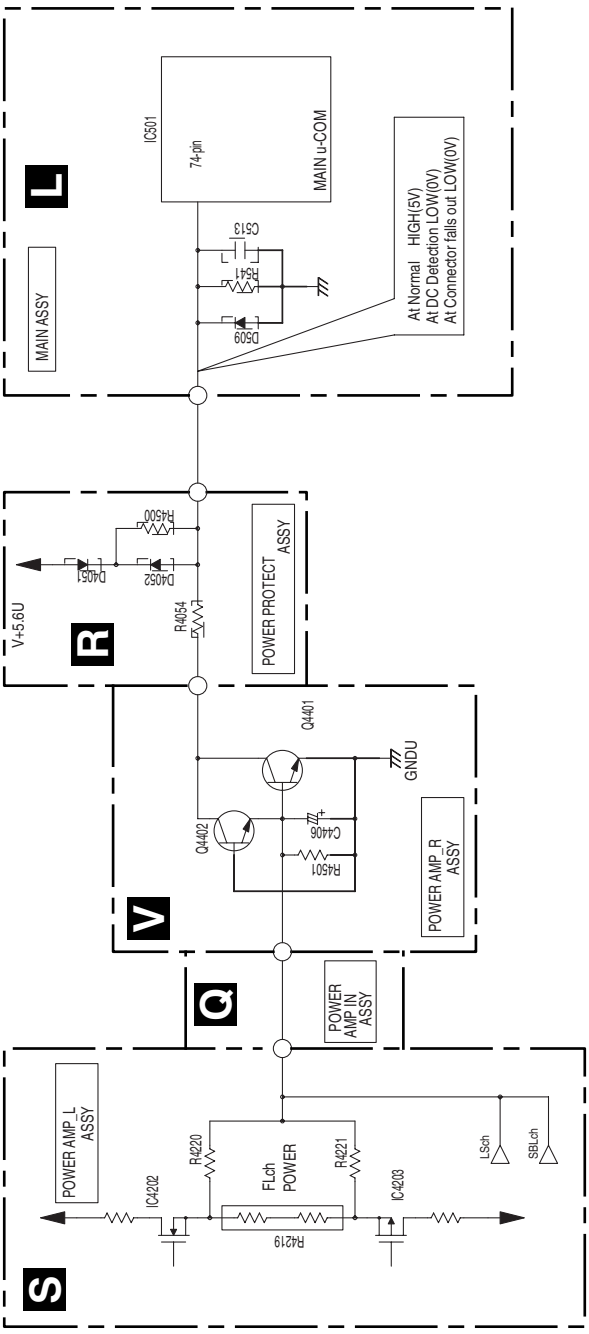

• Overload Detection circuit

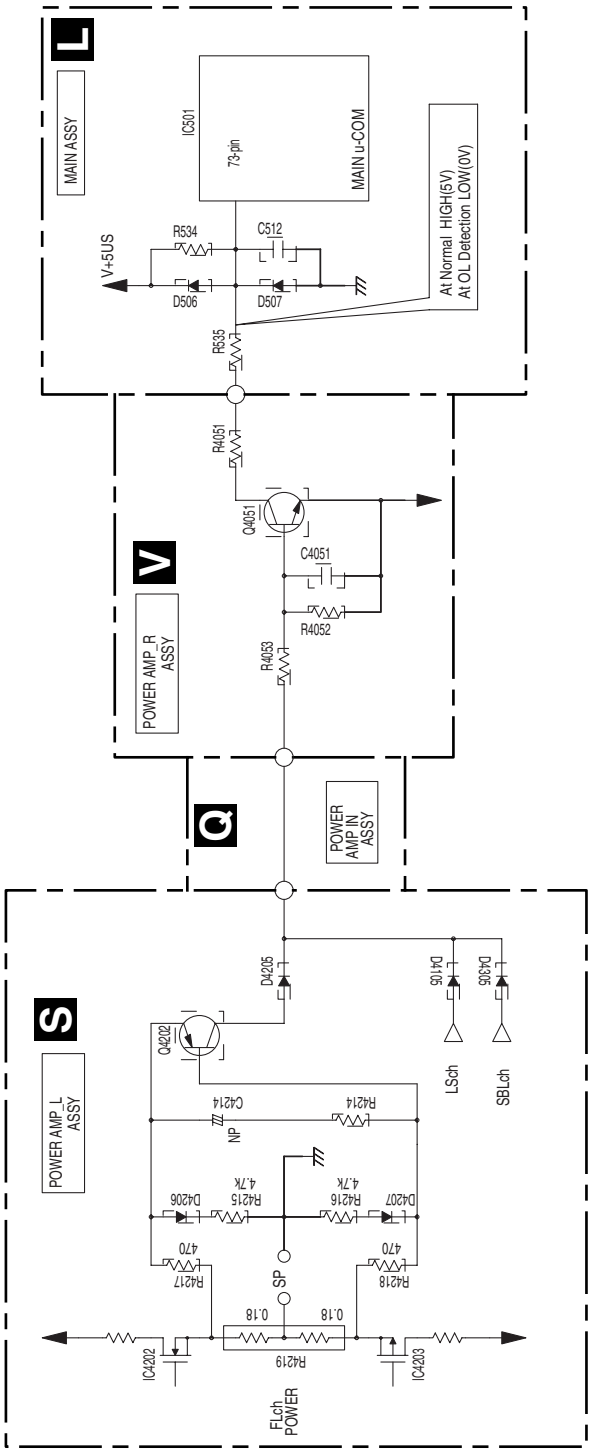

7.1.2 HOW TO DIAGNOSE THE AMPLIFIER SECTION

When DC detection worked (MCACC LED flashes for a long time) in the protection circuit of foregoing section (or there is not the speaker output, probably only 1CH), failure (damage) of the power amplifier section is considered.

Because this receiver cannot diagnose the amplifier section by an electricity state by structure, please diagnose it in the following steps.

Caution:
When release the STBY (MCACC LED flashes) state before repair, Because there is the case that the damage progresses when turns the power on once again, please be careful.

- According to a symptom, perform the following confirmation beforehand.

1. Are not Fuse and IC protector opening it?
2-a. When can turn on electricity, confirm that supply voltage of the point that can measure is appropriate.
2-b. Furthermore, confirm that voltage ((in a no signal) DC and the appropriate signal output) between GND and R2008-R2014 on the SP/PS Assy (Either of the amplifier side and the speaker terminal side is possible) (Or remove either of CN2101-2104) on the SP/PS Assy. And limit failure CH.

If was able to limit failure CH, diagnose the CH in the following steps.

- **Use the tester basically and check that each part is not damaged (resistance value / open / short circuit).**

About parts with damaged possibility, explain FL ch to an example in order.

1. R4231, R4232 (ACN7132: 0.047 Ω, 0.5W chip drain resistor)
   IC 4202, IC4203 (PBD001A: Nch, PBD002A: Pch output POWER MOS Tr.) /POWER AMP-L Assy

2. R4219 (ACN7121: 0.18 Ω .5W ×2 cement source resistor)
   R4217, R4218 (RS1/16S471J: 470 Ω chip resistor for protection circuit)
   D4201, D4203 (UDZS10B: 10V Zener diode for current limiting)
   D4202, D4204 (1SS355: Small signal diodes same as above)
   R4210, R4211 (RS1/16S560J: 56 Ω chip gate resistor)
   R4206, R4207 (RS1/16S101J:100 Ω chip IC4201 power filter resistor) /POWER AMP-L Assy

3. IC4201 (PA9010A: Power amplifier with output current bias Voltage step HIC) /POWER AMP-L Assy

4. Q2231 (2SA1514K) /VH TR Assy
   Q2232 (2SC3906K) /VH TR Assy
   Q2233 (2SA1837D1) /VH TR Assy
   Q2234 (2SC4793D1) /VH TR Assy

7.1.3 HOW TO DIAGNOSE THE UNIT WITH THE POWER AMPLIFIER SECTION REMOVED

Purpose:

When repairing this unit, the large Heat Sink Block obstructs access to some Assys.
If the Heat Sink Block is removed, as the posistor mounted on it is also disconnected, the protection circuit is activated, which disables failure diagnosis of these Assys while the unit is powered. With the method explained here, the Assys that cannot be diagnosed while the unit is powered because of the Heat Sink Block can be diagnosed by creating an artificial status of the posistor's being connected (by connecting a 100-ohm resistor under normal temperature).

Note: Use this method for diagnosing a failure other than possible failures inside the Heat Sink Block, such as those shown in the table below:

Symptoms that are highly suspected to be failures inside the Heat Sink Block	Possible causes
① No power with the MCACC LED flashing	DC detection has been activated to prevent further damage to the unit. Note: Refer to "7.1.2 How to diagnose the Amplifier Section" in the service manual.
② The unit turns itself off after "AMP ERR" was displayed on the FL display. Then it goes into state ① above.	
③ "OVERHEAT" is displayed on the FL display under normal temperature, then the unit turns itself off.	The peripheral circuits of the posistor inside the Power Amplifier Section are in failure. Note: A posistor is a kind of thermistor, and its resistance is approx. 100 ohms at normal room temperature.
④ The unit turns itself off without any indication on the FL	Overloaded amplifier, failure in the overload-detection circuit inside the Power Amplifier Section, etc.
⑤ "FAN STOP" is displayed on the FL display, then the unit turns itself off.	Disconnection of the Fan connector, failure in the fan. (Only for the models for Europe and those for other than North America and Japan)

Procedures:

① Remove the bonnet and center beam.

② Remove all the wires from the wire saddle.

③ Disconnect all six connectors connected between the Amplifier Assy and the SP/PS Assy.

• Remove the wires.

④ Disconnect the parallel wires from the connector CN2201. (If the wires are not easily disconnected, disconnect them with the connector attached, using a vacuum desoldering tool.)

⑤ Remove the eight screws that secure the Amplifier section.

• Disconnect the parallel wires.

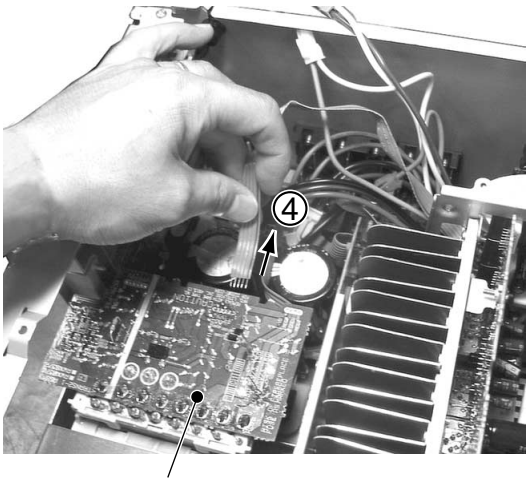

⑥ Remove the Power Amplifier, leaving the POWER PROTECT Assy intact.
- In this case, you can easily remove the Power Amplifier if the FFC cable connecting the POWER PROTECT Assy and the MAIN CONTROL Assy has been disconnected on either side.
- When removing the POWER PROTECT Assy, pull out the Assy while pushing on the board at the center from the rear side, for easier removal with less stress on the connector.

• Remove the POWER PROTECT Assy.

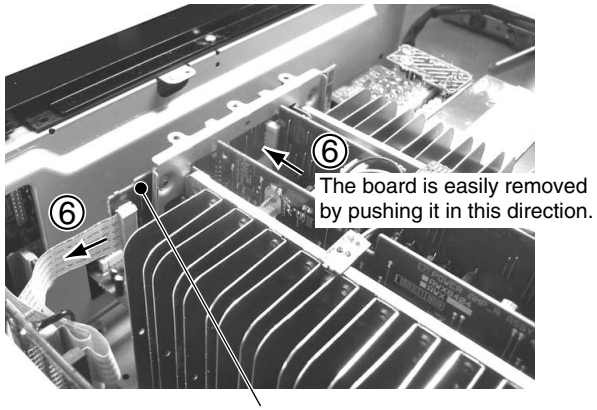

⑦ Jump with 100-ohm resistors in the following three places on the POWER PROTECT Assy:
ⓐ Between Pin 4 and Pin 5 of CN4052
ⓑ Between Pin 5 and Pin 6 of CN4052
ⓒ Between Pin 8 and Pin 9 of CN4051

• Jump with resistors.

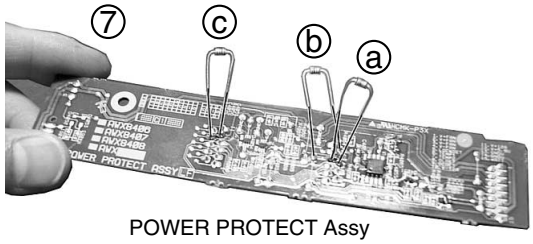

⑧ Secure the POWER PROTECT Assy so that it will not come into contact with metallic parts of the unit, such as the chassis. Then connect the POWER PROTECT Assy with the MAIN CONTROL Assy using an FFC cable and turn on the power. The unit will be turned on without the protection circuit activated.

• Turn on the power.

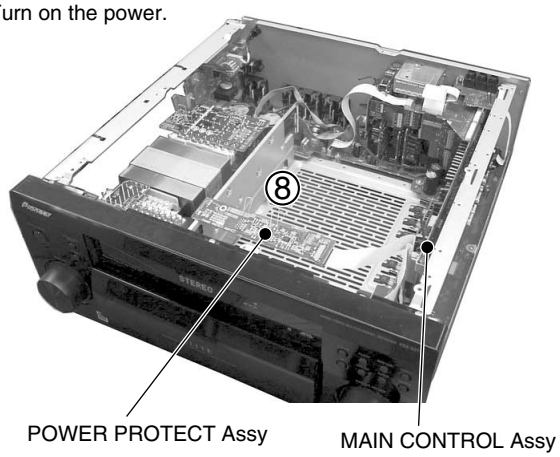

⑨ After finishing diagnoses, remove the three resistors inserted in Step ⑦, and before returning the Power Amplifier to its original position, discharge the electrolytic capacitors in the places shown in the table below.

- If connection is made without discharging the electrolytic capacitors, the resistors may be damaged by a surge of current.
- Discharge the electrolytic capacitor using a resistor, not by short-circuiting it. Using a tester, etc., completely discharge it until there is no remaining voltage.

Places to be discharged	Discharging methods
SP/PS Assy: C2051, C2052	Jump with a discharging resistor in CN2002 of the SP/PS Assy. (Photo 1)
POWER AMP L Assy: C4401, C4402	Jump with a discharging resistor on the connector side of CN2002 of the POWER AMP-L Assy. (Photo 2)
POWER AMP R Assy: C4403, C4404	While you still have CN2002 of the SP/PS Assy jumped with a discharging resistor, reconnect the connector to CN2001 of the SP/PS Assy. (Photo 2)
TRANS 2-1 Assy: C2213, C2214	Jump between each capacitor and ground. (Photos 3 and 4)

● Discharging resistors

In a case when one resistor is used

Wattage (W)	3	2	1
Recommended constant to be used (ohms)	3300	4700	10000
Miscellaneous			
Three-wire lead	ADX7404		
Three-core connector	RKP1751		

Photo 1: Discharging ±VL (SP/PS Assy: C2051, C2052)

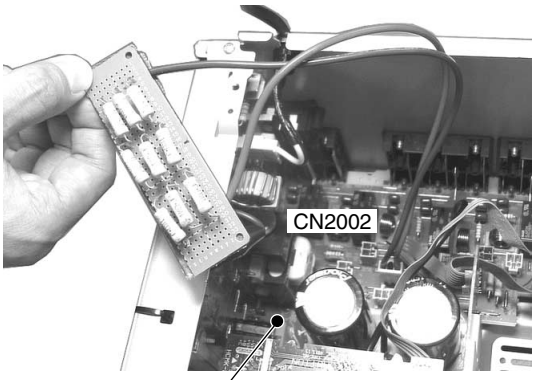

• Discharging resistors

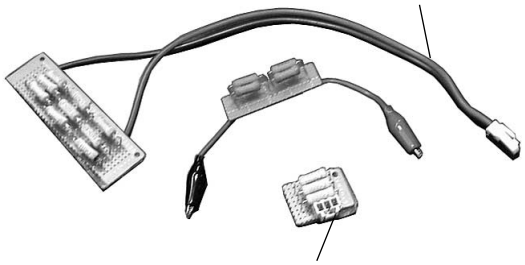

Photo 2: Discharging ±VL inside the POWER AMP-L and R Assys
Discharging of C4403 and C4404 of the POWER AMP-R Assy is also possible by reconnecting the connector to CN2001 of the POWER AMP-R Assy while keeping the discharging resistor connected to CN2002 of the SP/PS Assy connected.

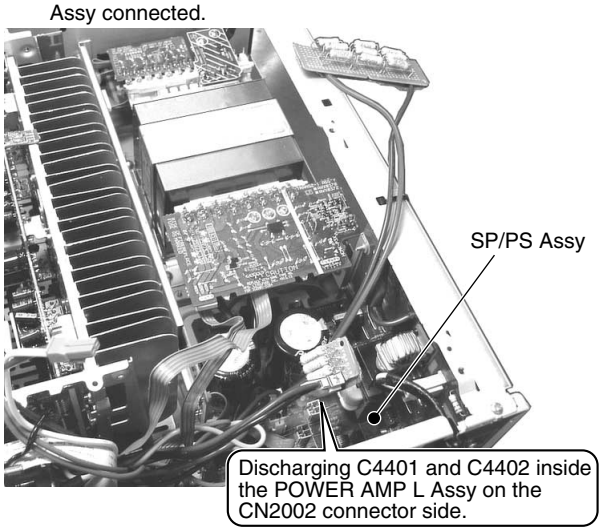

Photo 3: Discharging +VH (TRANS 2-1 Assy: C2213)

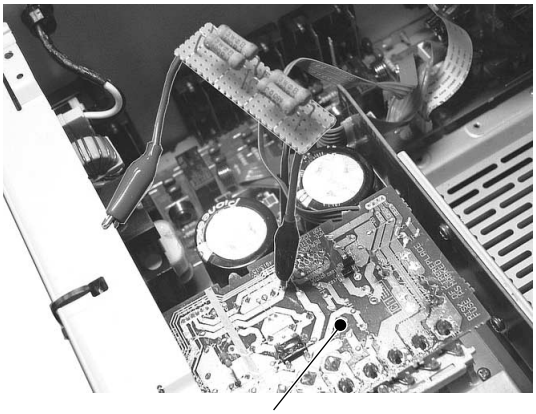

Photo 4: Discharging -VH (TRANS 2-1 Assy: C2214)

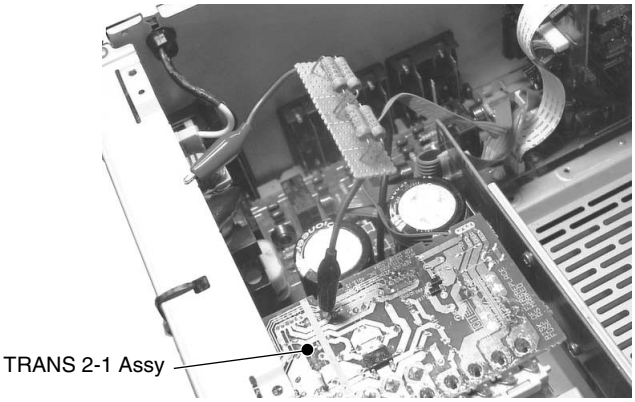

⑩ Reassemble the unit by following Steps ①-⑤ in reverse.

• When reconnecting the parallel wires to the connectors or reinserting the connectors, be careful of the direction. If a wire is connected to the wrong side of the connector, or if the five wires are not connected correctly, the resistors may be damaged.

• Direction of wires

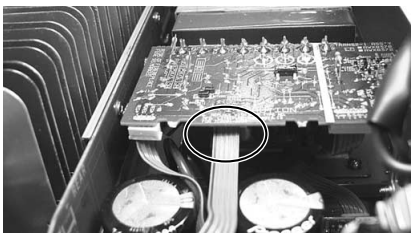

7.1.4 DISASSEMBLY

Note: Even if the unit shown in the photos and illustrations in this manual may differ from your product, the procedures described here are common.

1 Bonnet Case V1B and Heatsink Section

① Remove the bonnet case V1B by removing the twenty screws.
② Remove the two screws.
③ Remove the eight screws.
④ Disconnect the seven connectors.
⑤ Disconnect the two flexible cables.
⑥ Remove the heatsink section.

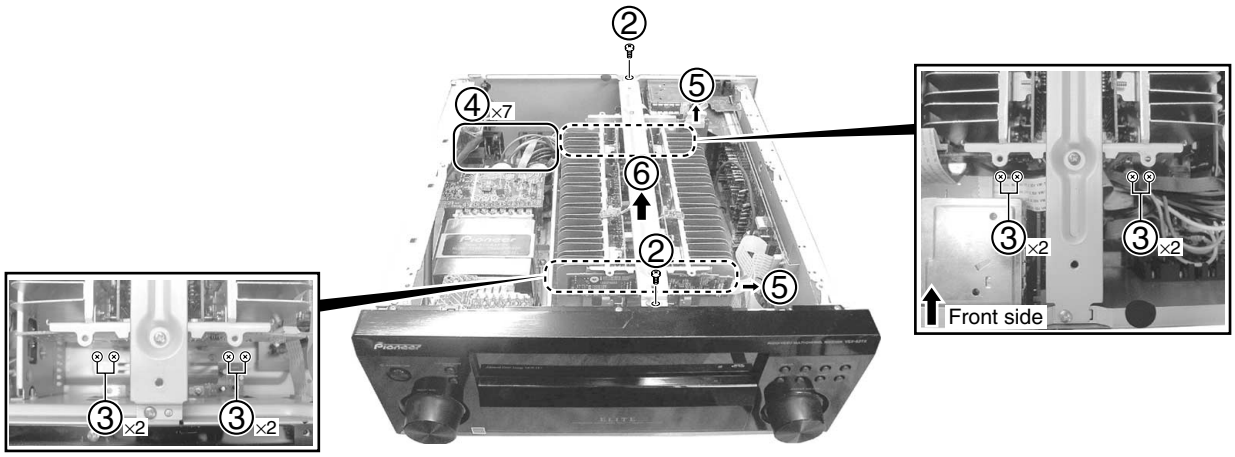

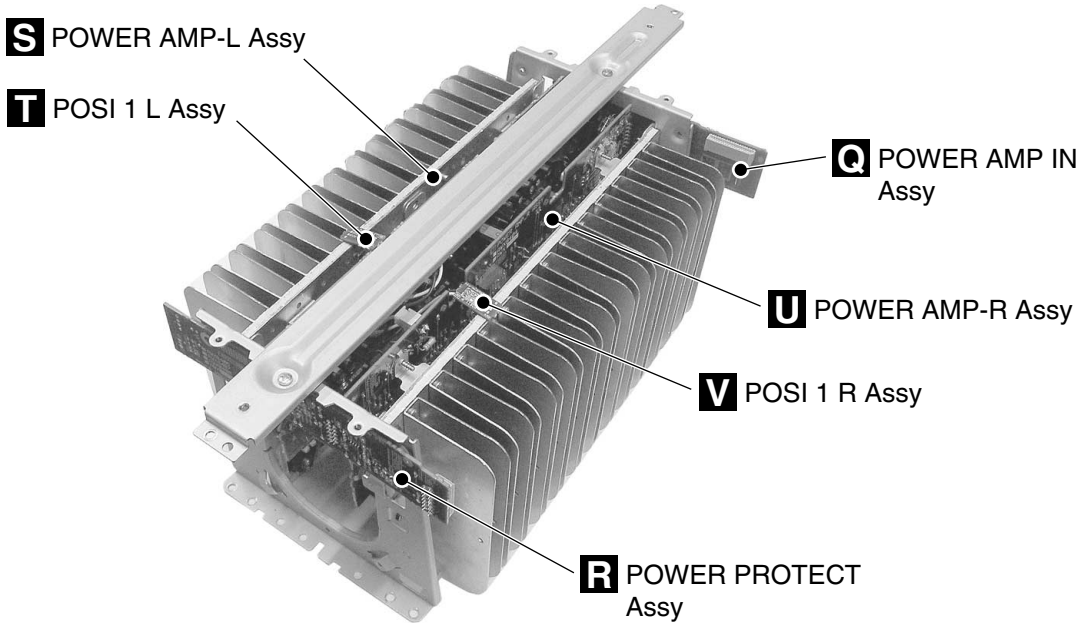

2 Front Panel Section

① Remove the six screws.
② Disconnect the two flexible cables.
③ Remove the four screws.
④ Unhook the two hooks.
⑤ Remove the front panel section.
⑥ Disconnect the one connector.

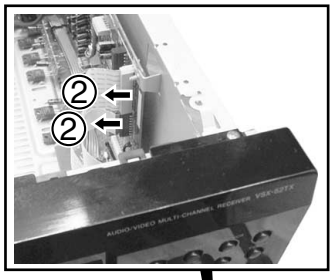

• Top view

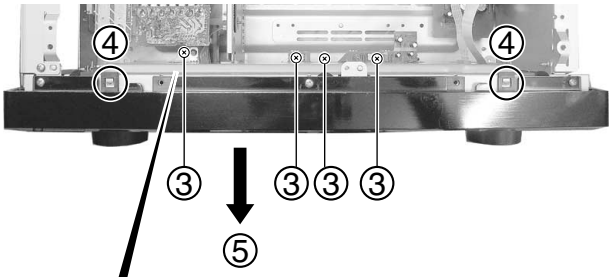

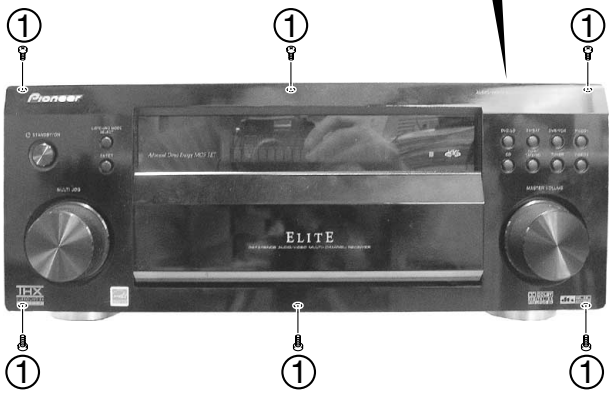

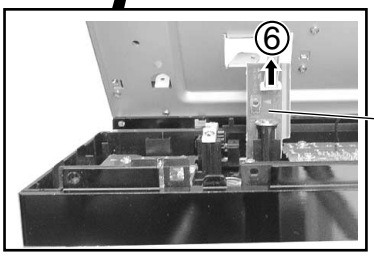

HEADPHONE Assy

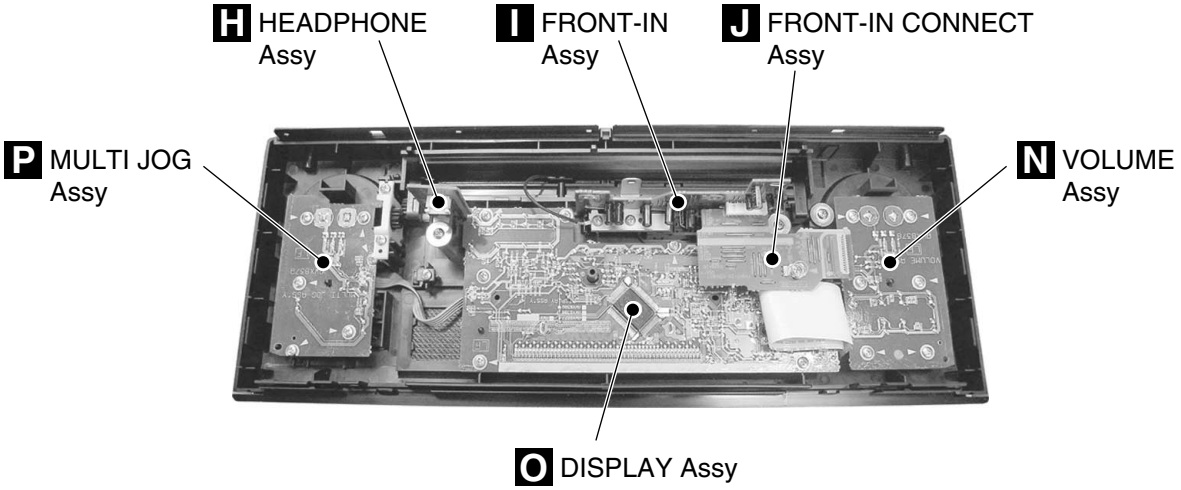

3 Rear Panel and Main Sections

① Remove the seven screws.
② Remove the three screws.

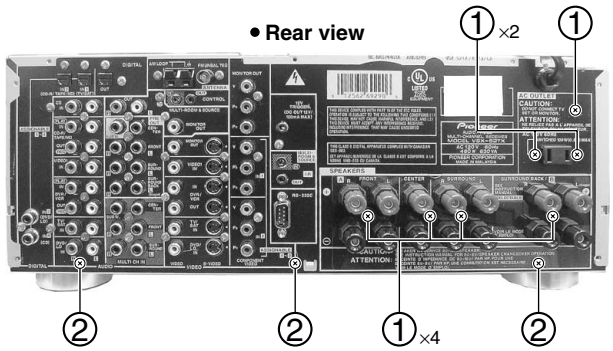

③ Remove the one screw.
④ Disconnect the one connector.
⑤ Remove the three screws.
⑥ Remove the five screws.
⑦ Remove the locking card spacer.
⑧ Disconnect the two connectors and the one flexible cable.

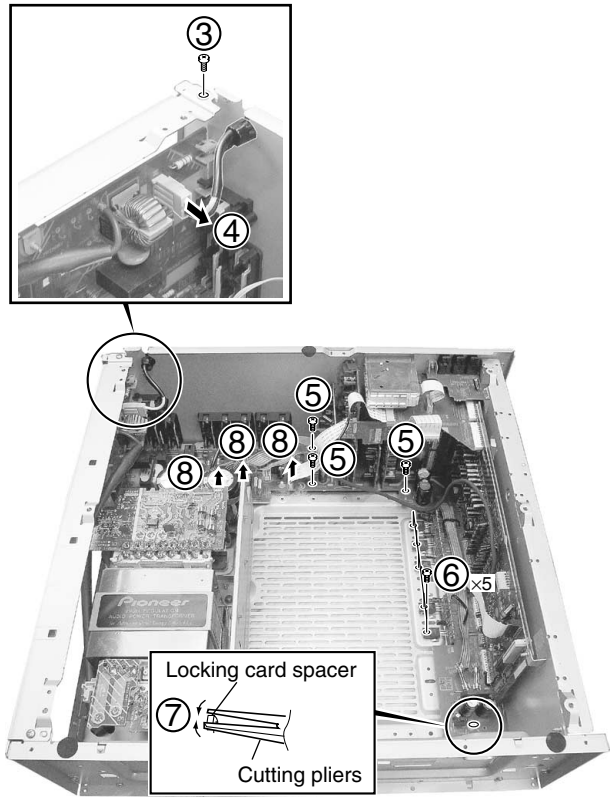

⑨ Remove the two screws.
⑩ Remove the three screws.
⑪ Remove the two screws.

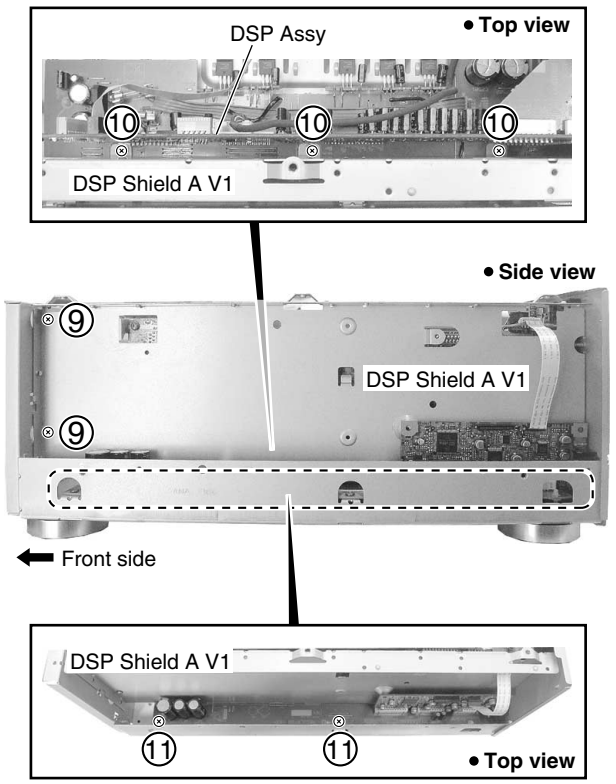

⑫ Remove the rear panel section with the main section.

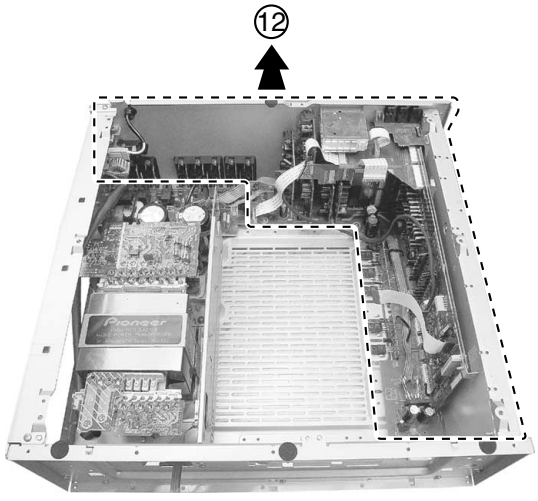

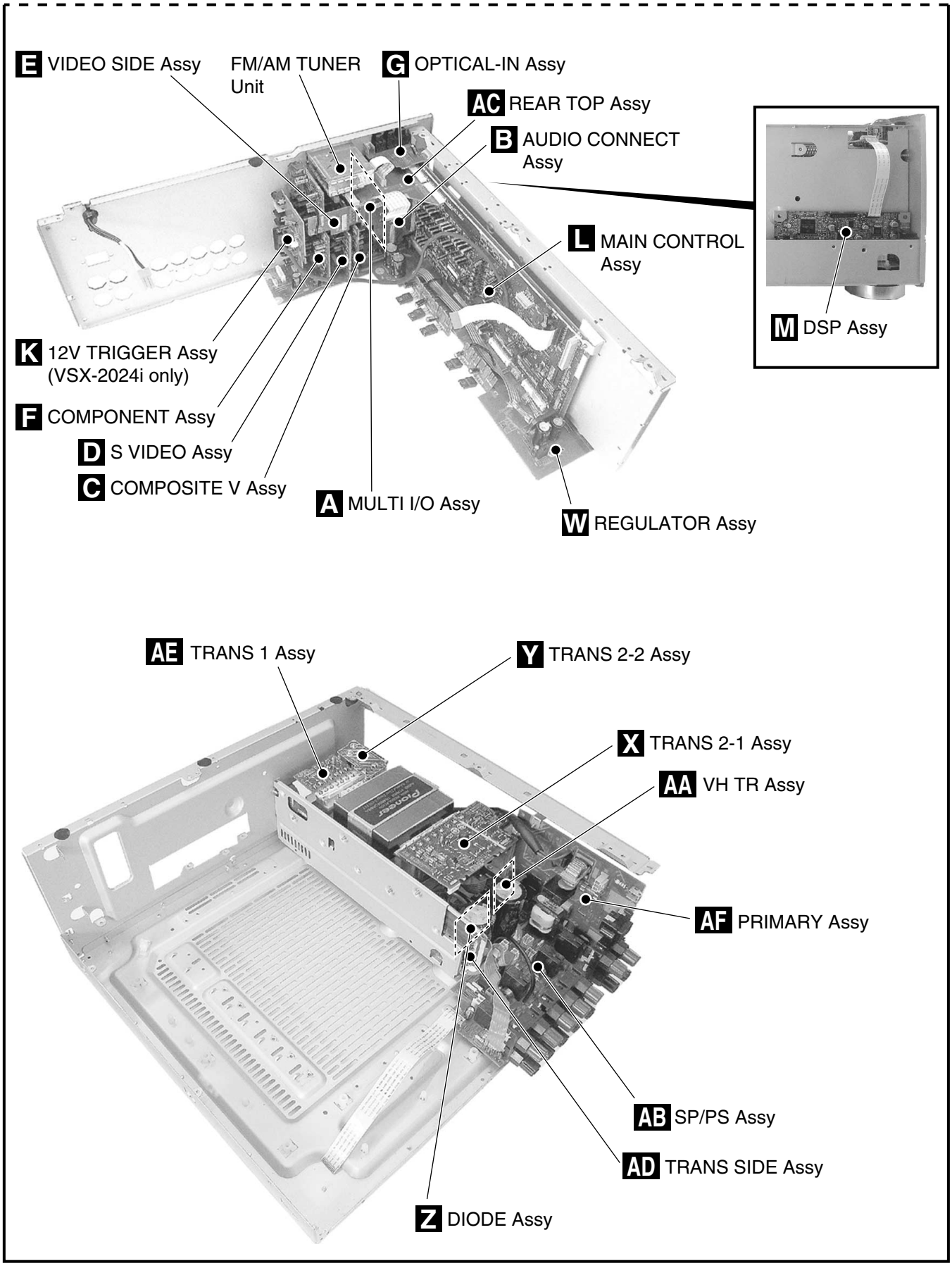
E VIDEO SIDE Assy
FM/AM TUNER Unit
G OPTICAL-IN Assy
AC REAR TOP Assy
B AUDIO CONNECT Assy
L MAIN CONTROL Assy
M DSP Assy
K 12V TRIGGER Assy (VSX-2024i only)
F COMPONENT Assy
D S VIDEO Assy
C COMPOSITE V Assy
A MULTI I/O Assy
W REGULATOR Assy
AE TRANS 1 Assy
Y TRANS 2-2 Assy
X TRANS 2-1 Assy
AA VH TR Assy
AF PRIMARY Assy
AB SP/PS Assy
AD TRANS SIDE Assy
Z DIODE Assy

7.1.5 TROUBLE SHOOTING OF THE DSP ASSY

• When a sound is not out in the multi-channel signal playback or surround mode with the digital signal input.
(SurroundBack is not out with the setting.)
• Suppose CR to be poor contact and that is not damaged.
• This shows failure analysis of DSP Assy.

Step 0: Preliminary check

• Tighten the COAX Jack screws.
(GND of the DSP module floats from the chassis. And this unit may not work normally, because the electric potential becomes unstable.)

Step 1: Mute pin

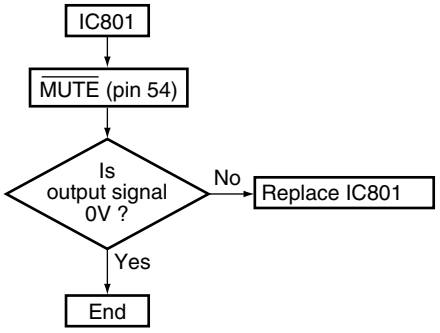

Step 2: B to B connector

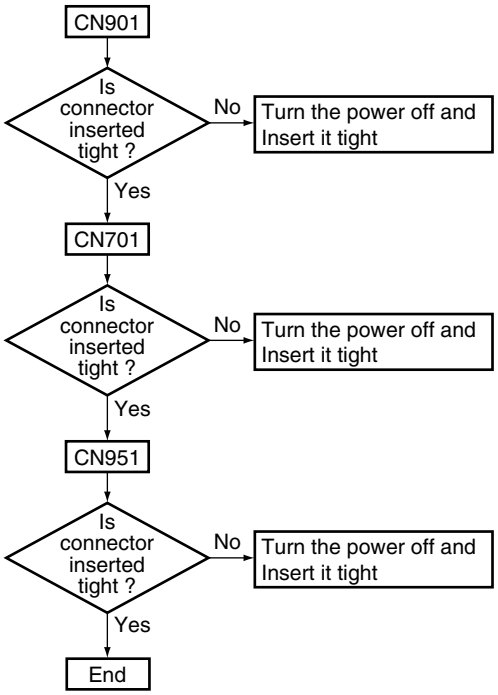

Step 3: Regulator IC

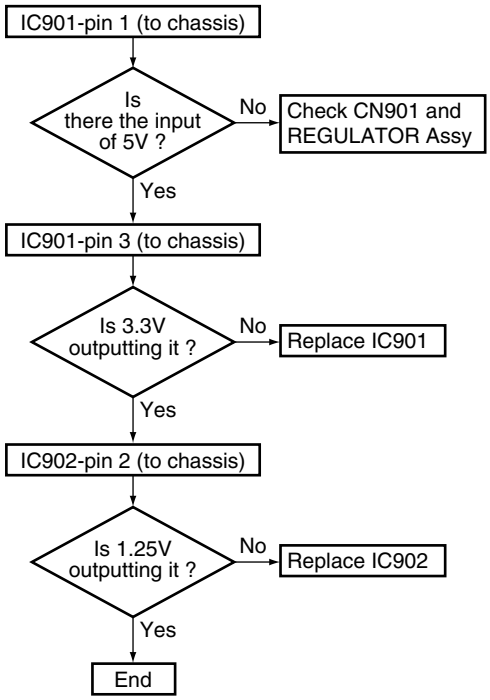

Step 4: 3 → 5V conversion

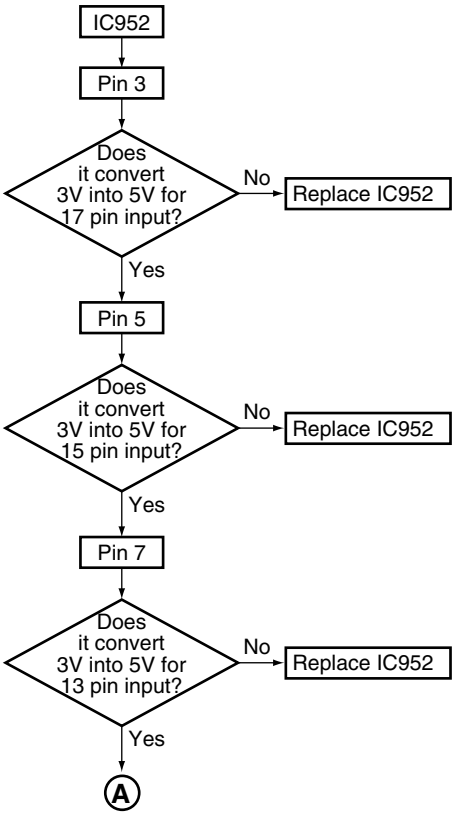

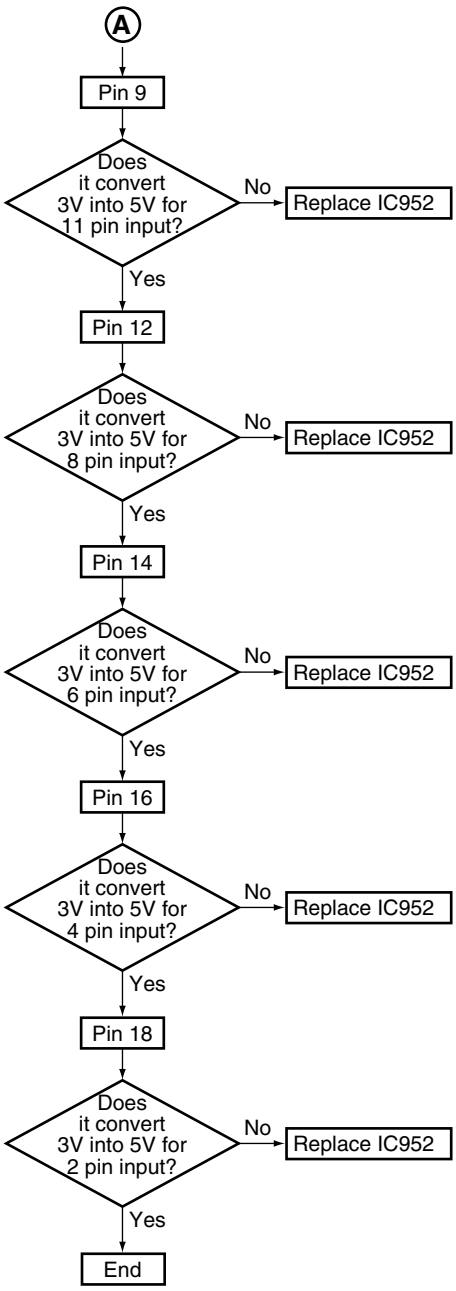

Step 5: 5 → 3V conversion

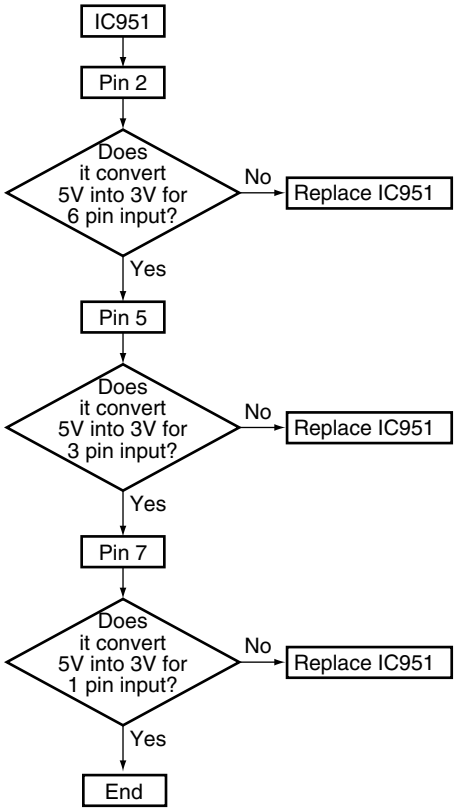

Step 6: DIR

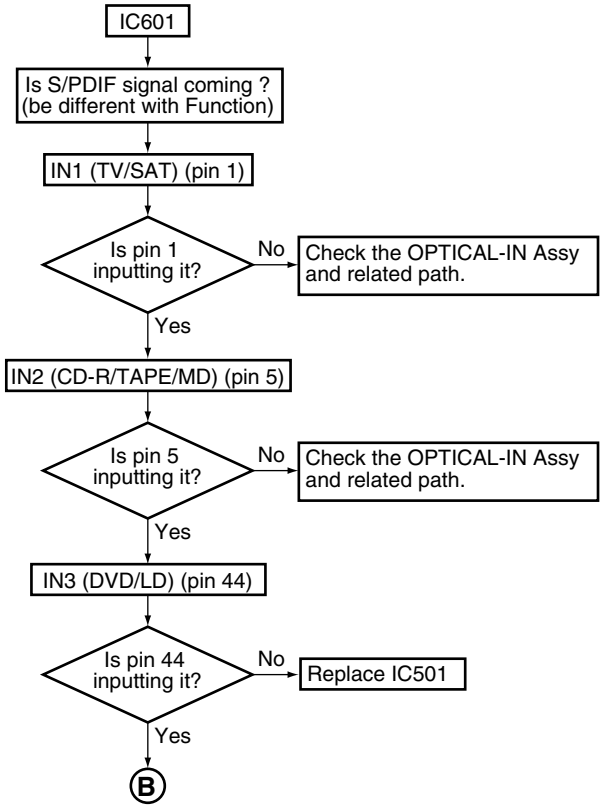

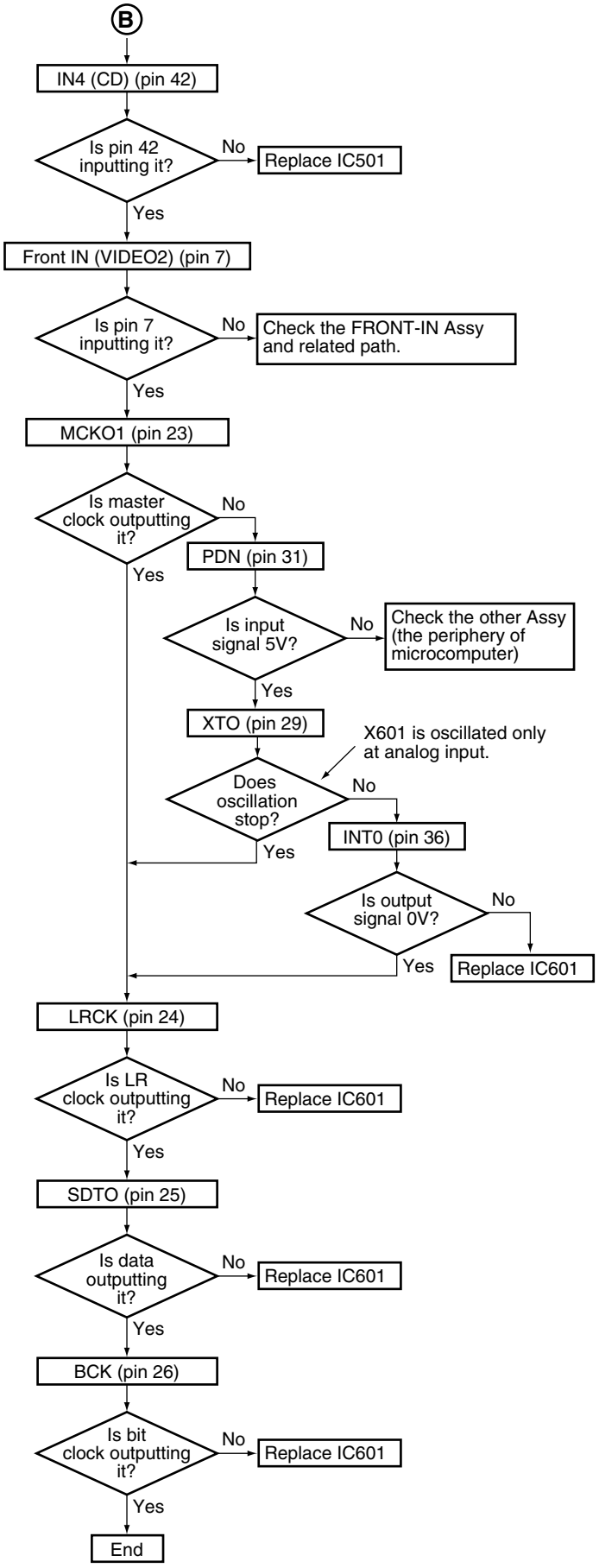

Step 7: X'tal

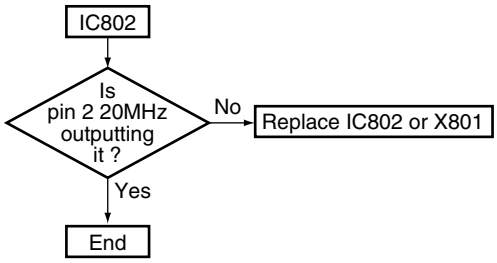

Step 8: DSP output (digital)

• Digital output of each channel in the digital signal (there is a sound) input.

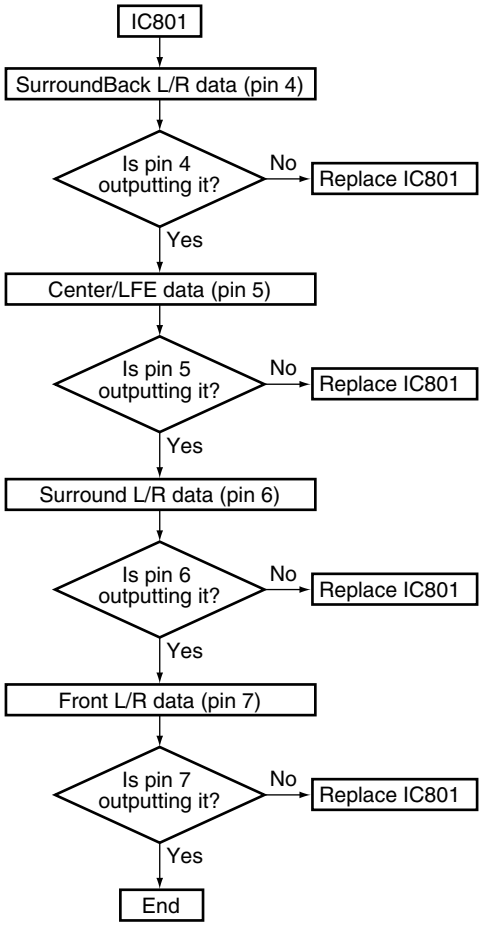

• Each channel output in the digital signal (–∞ dB (there is no sound)) input.

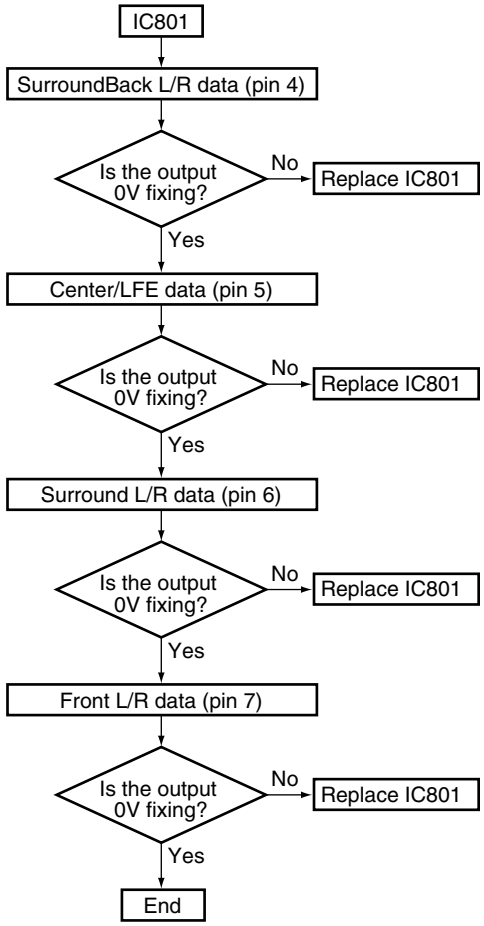

Step 9: Codec output (analog)

• Analog output of each channel in the digital signal (there is a sound) input.

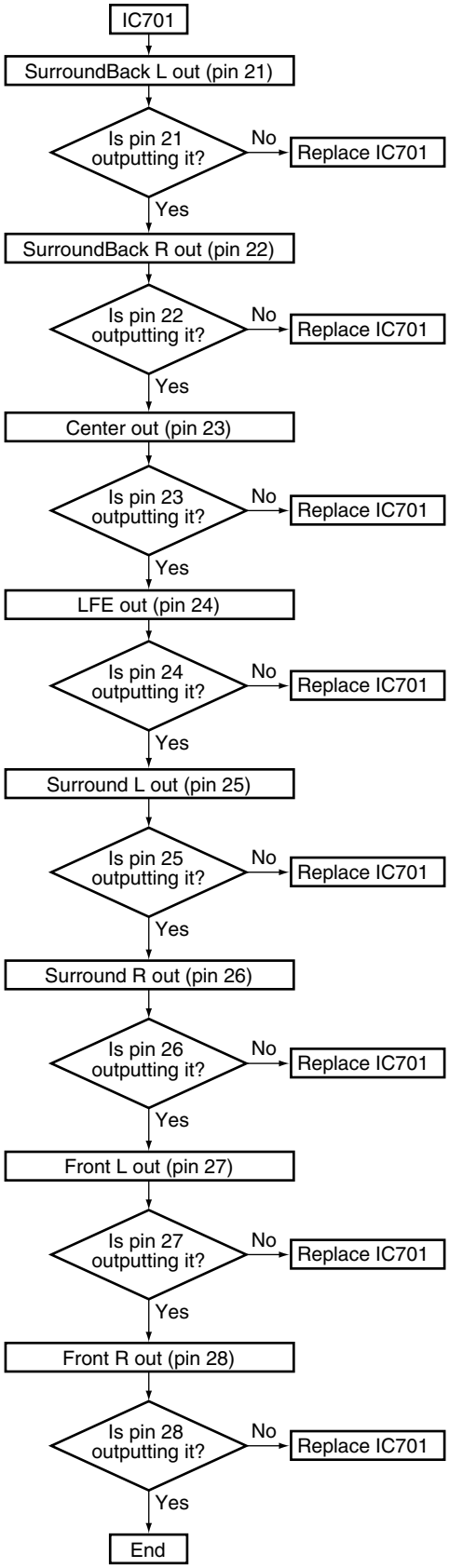

• Each channel output in the digital signal (–∞ dB (there is no sound)) input.

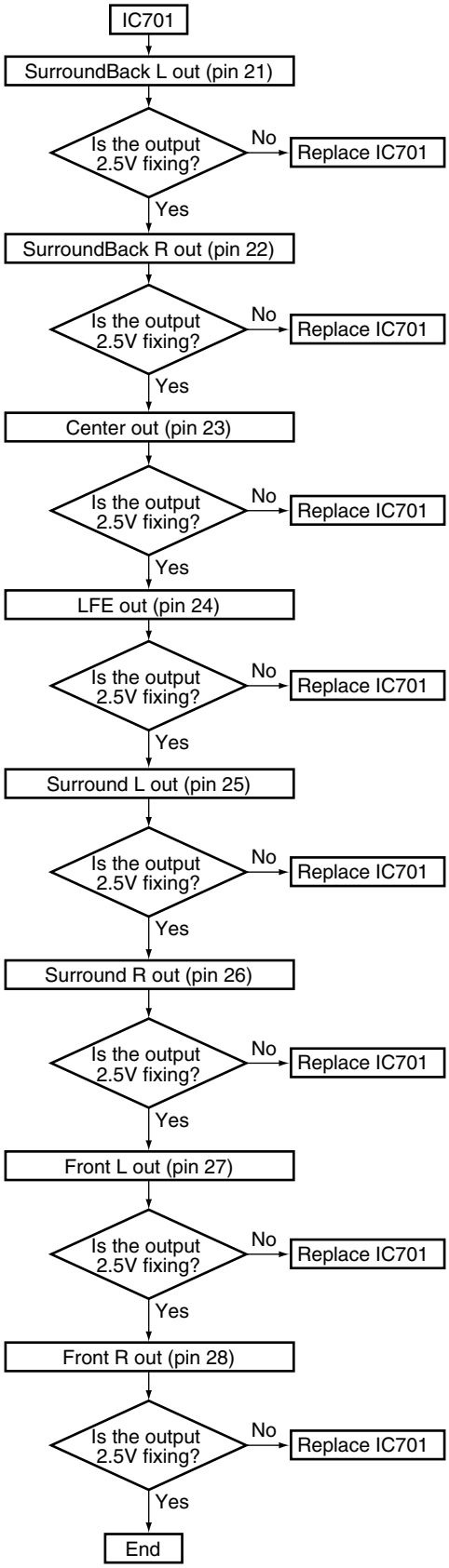

• When MCACC is turned to ON
(SurroundBack is not out with the setting.)
• Suppose CR to be poor contact and that is not damaged.
• This shows failure analysis of DSP Assy.

Step 0: Preliminary check

• Tighten the COAX Jack screws.
(GND of the DSP module floats from the chassis. And this unit may not work normally, because the electric potential becomes unstable.)

Step 1: Mute pin

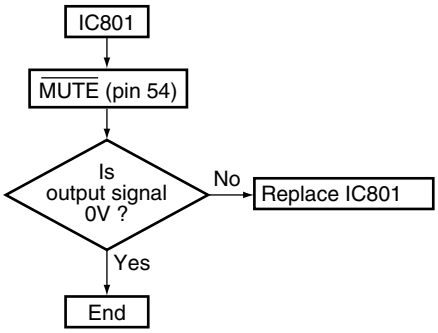

Step 2: B to B connector

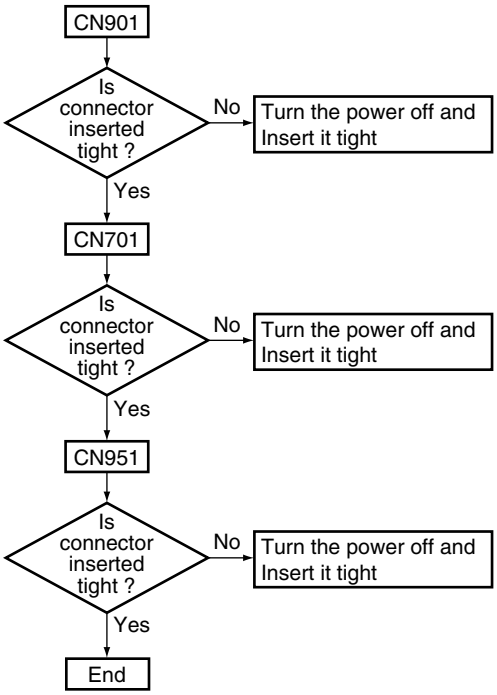

Step 3: Regulator IC

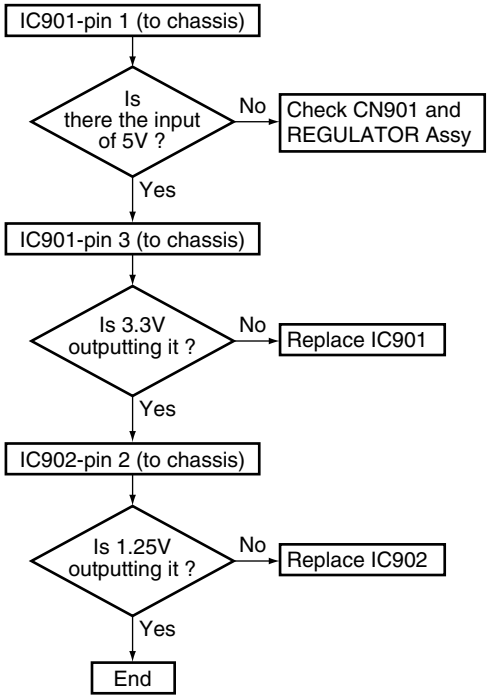

Step 4: 3 → 5V conversion

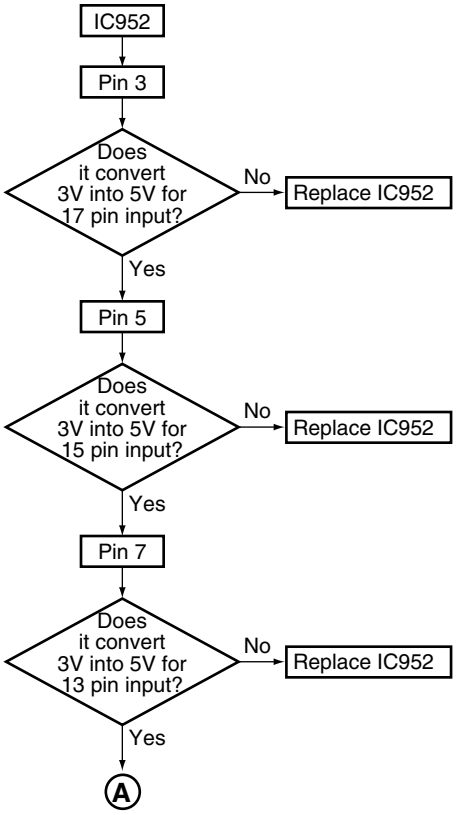

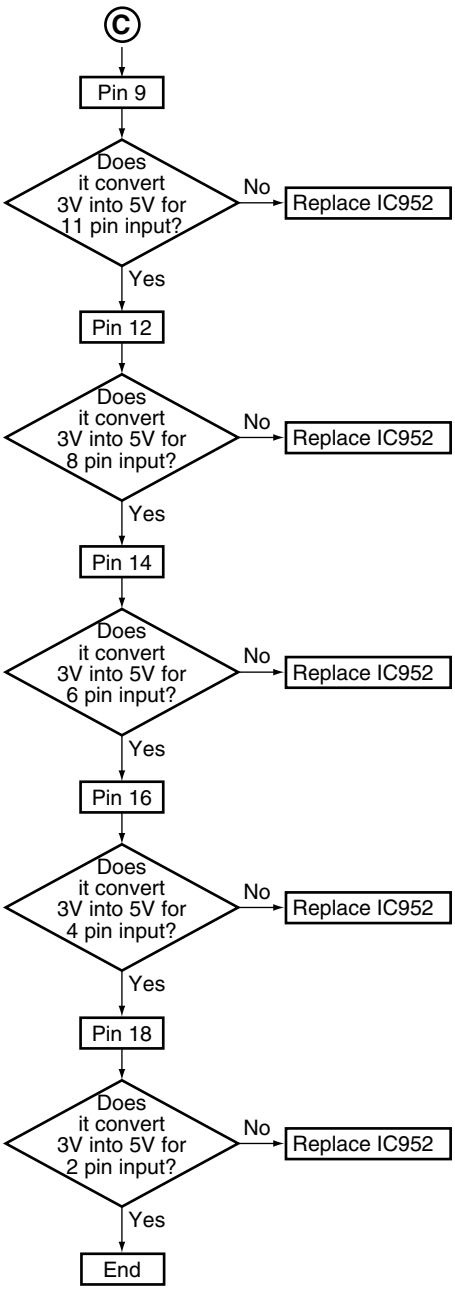

Step 5: 5 → 3V conversion

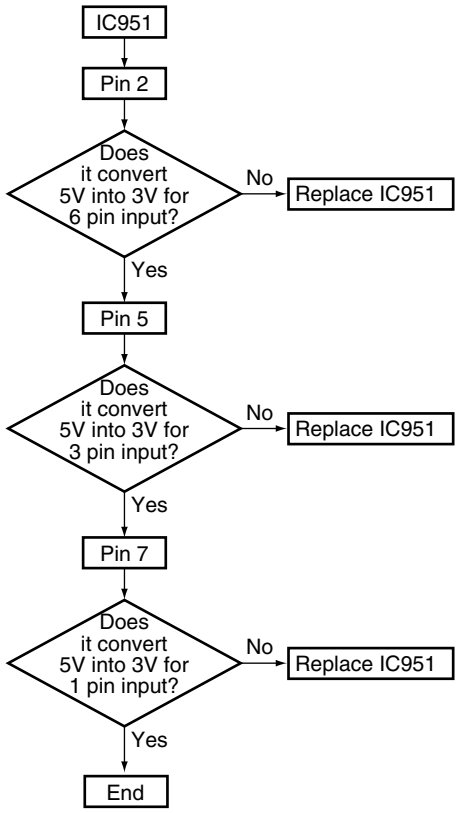

Step 6: X'tal

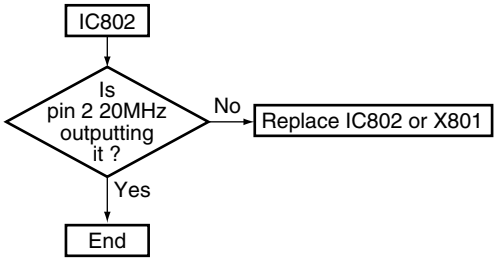

Step 7: ROM

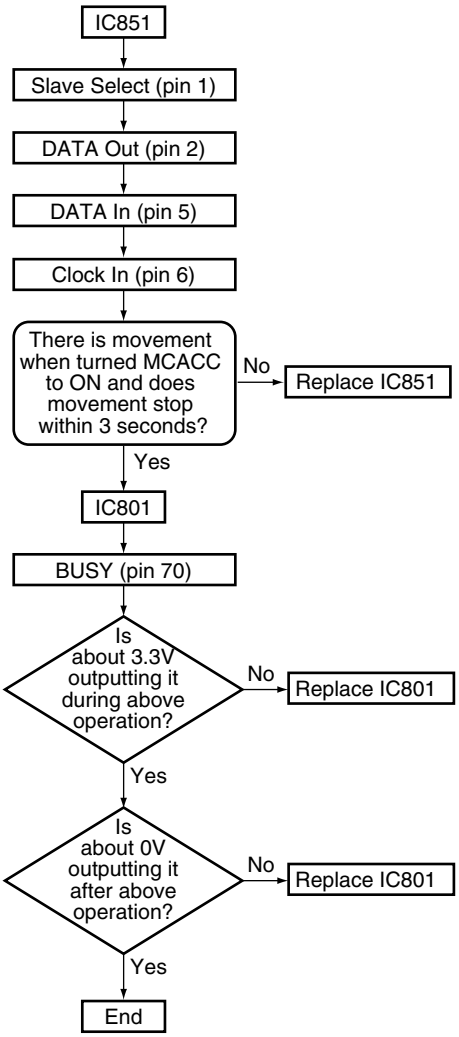

Step 8: DSP output (digital)

• Digital output when indicating each channel

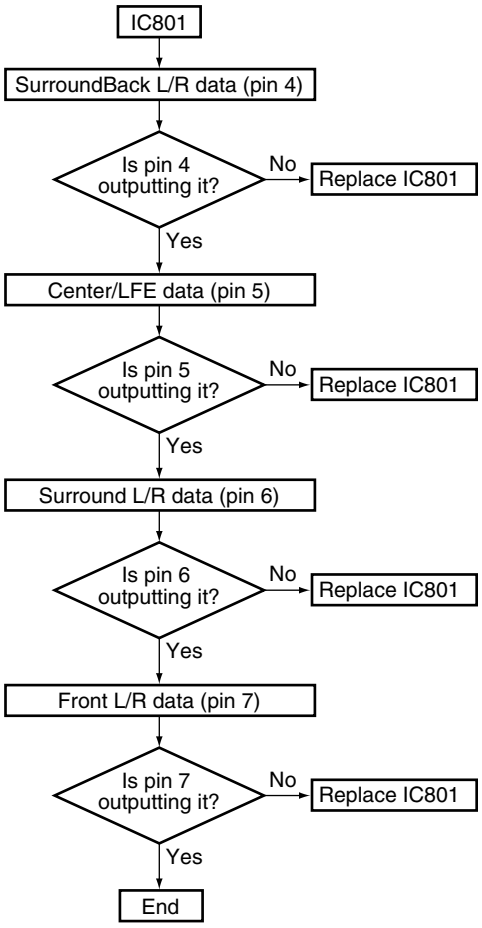

Step 9: Codec output (analog)

• Analog output when indicating each channel

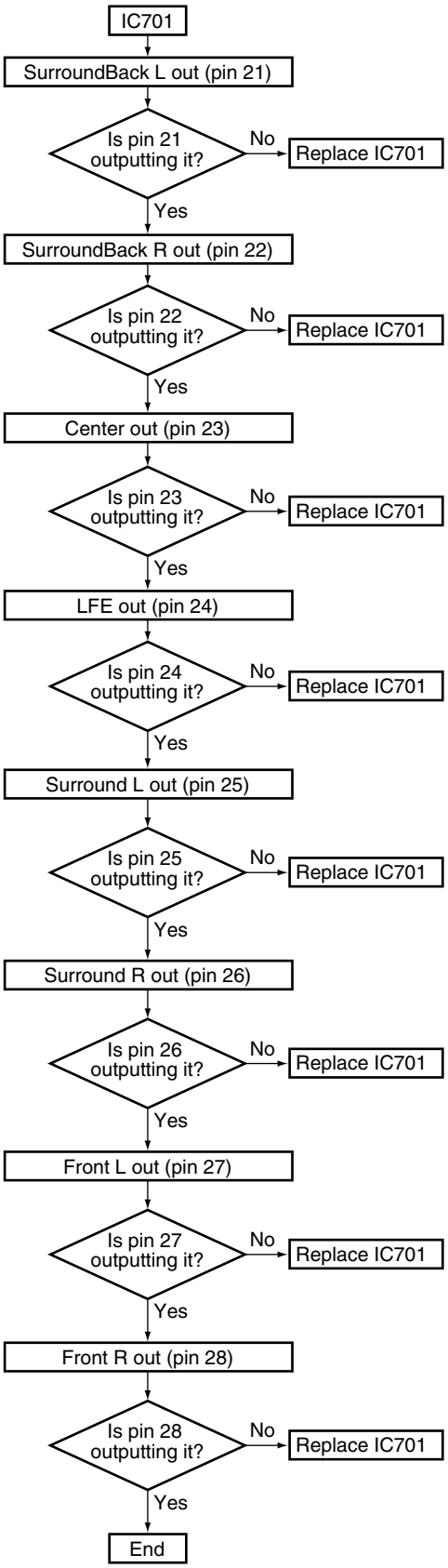

7.1.6 OUTLINE OF THE 1394 UNIT

●Operational Outline of the IEEE 1394 Unit

This unit supports the A&M protocol (Audio and Music Data transmission Protocol), which, among the IEEE 1394 audio and video protocols, is employed for audio equipment and electronic musical instruments, etc. As the unit does not support the MPEG2-TS protocol (for BS digital tuners and D-VHS) or the DV protocol (for digital video cameras and Pioneer's DVR) among IEEE 1394 audio and video protocols, it does not support video data transmission.

The main commands supported by this unit are: For sending, the PLAY command to a player, and for receiving, the commands for switching functions, increasing/decreasing the volume, muting on/off, and stream information (for inquiring about the receiving capabilities of the receiver).

Audio data (media) that can be received by the unit are as follows:
• DVD-A (2 channels, multiple channels)
• SACD (2 channels, multiple channels)
• IEC 60958 (DVD-V, DVD-RW, CD, VCD, MP3, DTS-CD, etc.)

The received data are demodulated separately for the above three signal formats in the IEEE 1394 receiving IC, output to another IC for jitterless transmission, then output to a third IC for DIR or to the DSP of the main unit.

As to SACD data, DSD streams are converted to multibit data at the SACD/PCM converting IC, and this enables SACD data processing at the DSP of the main unit. But DSD streams are inputted directly into the DAC bypassing the DSP at SACD DIRECT mode.
In jitterless transmission, audio data with jitter generated during IEEE 1394 transmission (actually, jitter contained in sync signals that cannot be reduced by the PLL for audio receiving) are cached in the buffer RAM in the receiver up to a certain amount, and then read out by a highly accurate crystal-oscillation clock in the receiver, which enables reduction of jitter. The receiver controls the amount of cached data in the buffer RAM such that a certain amount of data is always cached. If the amount of cached data falls below the specified level, a request is sent to increase the playback speed (transmission volume per unit hour) (+1%). If the amount of cached data exceeds the specified level, a request is sent to decrease the playback speed (-1%). Thus, data transmitted in jitterless transmission are delayed by about 0.7 sec behind the time indicated on the FL of the transmitting device, compared with data transmitted in normal transmission. Moreover, as mentioned above, because the sending device switches the system clock according to the request of the receiving device, sync of the video signal may be unlocked, and the audio signal would be delayed behind a video signal because of its being cached. So many sending devices do not adopt jitterless transmission for content having both audio and video signals.

Both the sending and receiving devices must support jitterless transmission to enable this type of transmission. Start of jitterless transmission is requested by the receiving device; however, depending on the status of the sending device (type of media, etc.), jitterless transmission may not be possible. Media for which jitterless transmission is supported and those for which it is not (only normal transmission is supported) are shown below:
• Jitterless transmission : DVD-A, SACD, CD, DTS-CD
• Normal transmission only : DVD-V, DVD-RW, VCD, MP3

Depending on the specifications of the sending device, it may not support jitterless transmission, even for those media for which it can be supported.
As to copyright protection, IEEE 1394 employs the DTCP (Digital Transmission Content Protection) system, which consists of the following:
1. Copy-control information
2. Authentication and key exchange
3. Encryption
4. System renewability

The procedures for copy protection are basically as follows: After authentication and key exchange for encryption/decryption, the sending device will send the data encrypted using the keys. The receiving device in turn will decipher the data using the exchanged keys.
• Media whose data can be encrypted: DVD-V, DVD-A, SACD, DVD-RW
• Media whose data cannot be encrypted: CD, DTS-CD, VCD, MP3

● IEEE 1394 Error Indications

No.	Message	Error Code	Cause and Actions to be taken	Remarks
1	WRITING CONFIG	E7	The Config ROM data are being written to flash memory. Do NOT turn off the power while this message is displayed. While this message is displayed, the Standby button on the main unit is disabled.	This message is displayed when a unit whose host board was replaced with a new one is turned on for the first time.
2	MODEL ID ERROR	CO	The MODEL ID stored in flash memory on the host board and that stored in the main unit do not match. Download the GUID again.	This error is generated when a host board for the wrong destination is mounted in the unit, and it will only be generated during servicing. The message will remain displayed until the error is corrected.
3	CONFIG ERROR	C1	The Config ROM data are erroneous. Download the GUID again.	This message is displayed when the power is turned off while the Config ROM data are being written. As this is generated while the unit is operated online, this error will only be generated during servicing. The message will remain displayed until the error is corrected.

Note: If downloading of the GUID cannot be performed for corrective measures for messages 1 and 2, replace the host board with a new one.

7.2 PARTS

7.2.1 IC

• The information shown in the list is basic information and may not correspond exactly to that shown in the schematic diagrams.

● List of IC

DSPA56371AF180, AK4628VQE, PD5957A, PE5403A, TSB43CA42ZGW, SM5819AF

■ DSPA56371AF180 (DSP ASSY: IC801)

• DSP Microcomputer

● Pin Function

No.	Pin Name	I/O	Pin Function	Active
1	SDI1	I	Digital audio data (Front L/R)	
2	GNDIO	–	Interface GND	
3	VDDIO	–	Interface power supply (3.3V)	
4	SDO3	O	Digital audio data (Surround Back L/R)	
5	SDO2	O	Digital audio data (Center/Subwoofer)	
6	SDO1	O	Digital audio data (Surround L/R)	
7	SDO0	O	Digital audio data (Front L/R)	
8	VDDCO	–	Core power supply (1.25V)	
9	PF8	O	General-purpose port	
10	PF6	–	General-purpose port: LOCK	
11	PF7	O	General-purpose port	
12	GNDCO	–	Core GND	
13	PF2	O	General-purpose port	
14	PF3	O	General-purpose port	
15	PF4	O	General-purpose port	
16	PF5	O	General-purpose port	
17	VDDIO	–	Interface power supply (3.3V)	
18	PF1	O	General-purpose port	
19	PF0	O	General-purpose port	
20	GNDSP	–	GND for S/PDIF	
21	PF9	O	General-purpose port	
22	SCAN	I	Test pin	
23	PF10	O	General-purpose port	
24	GNDIO	–	Interface GND	
25	VDDIO	–	Interface power supply (3.3V)	
26	PB0	I	General-purpose port	H
27	PB1	I	General-purpose port	L
28	GNDCO	–	Core GND	
29	VDDCO	–	Core power supply (1.25V)	
30	TDO	O	JTAG data output	
31	TDI	I	JTAG data input	
32	TCK	I	JTAG test clock	
33	TMS	I	JTAG mode select	
34	MOSI	I	Communication data input with the microcomputer	
35	MISO	O	Communication data output with the microcomputer	
36	SCK	I	Communication clock with the microcomputer	
37	SS	I	Communication chip select with the microcomputer	L
38	HREQ	O	Communication request with the microcomputer	H
39	VDDPA	–	PLL power supply (3.3V)	
40	GNDPA	–	PLL GND	
41	VDDPP	–	PLL power supply (3.3V)	
42	GNDPP	–	PLL GND	
43	GNDPD	–	PLL GND	
44	VDDPD	–	PLL power supply (1.25V)	
45	EXTAL	I	External clock input	

No.	Pin Name	I/O	Pin Function	Active
46	PIINT	I	PLL initial pin	
47	RESET	I	Reset	L
48	MODO	I	Mode select D	
49	MODC	I	Mode select C	
50	MODB	I	Mode select B	
51	MODA	I	Mode select A	
52	VDDCO	–	Core power supply (1.25V)	
53	GNDCO	–	Core GND	
54	MUTE	O	DSP MUTE output	L
55	PE10	O	General-purpose port	
56	PE9	O	General-purpose port	
57	PE8	O	General-purpose port	
58	SDI1_1	I	Digital audio data (Center/Subwoofer)	
59	SDI0_1	I	Digital audio data (Ancillary data)	
60	FST_1	I	Digital audio LR clock	
61	PE1	I	General-purpose port: External serial ROM data input	
62	SCKT_1	I	Digital audio bit clock	
63	PE0	O	General-purpose port: Exterenal serial ROM chip select	L
64	VDDIO	–	Interface power supply (3.3V)	
65	GNDIO	–	Interface GND	
66	PE5	O	General-purpose port: Exterenal serial ROM clock	
67	PE2	O	General-purpose port: Exterenal serial ROM data output	
68	GNDCO	–	Core GND	
69	PD1	O	General-purpose port: DSP master/slave switch or 96DTS	H
70	PD0	O	General-purpose port: BUSY	H
71	VDDCO	–	Core power supply (1.25V)	
72	PC2	O	General-purpose port	
73	HCKT	I	Digital audio master clock	
74	GNDIO	–	Interface GND	
75	VDDIO	–	Interface power supply (3.3V)	
76	SCKR	I	Digital audio Bit clock	
77	SCKT	I/O	Digital audio Bit clock	
78	FSR	I	Digital audio Bit clock	
79	FST	I/O	Digital audio Bit clock	
80	SDIO	I	Digital audio data (Surround L/R)	

■ AK4628VQE (DSP ASSY: IC701)

• 8 ch Codec

● Pin Function

No.	Pin Name	I/O	Pin Function	Active
1	SDOS	I	SDTO source selection	
2	I2C	I	Serial control mode selection	
3	SMUTE	I	Soft mute	
4	BICK	I	Audio serial data clock	
5	LRCK	I	Input channel clock	
6	SDTI1	I	DAC1 audio serial data input	
7	SDTI2	I	DAC2 audio serial data input	
8	SDTI3	I	DAC3 audio serial data input	
9	SDTO	O	Audio serial data output	
10	DAUX	I	Auxiliary audio serial data input	
11	DFSO	I	Double-speed sampling mode	
12	SDTI4	I	DAC4 audio serial data input	
13	DZFE	I	Zero-input detecting function validity pin	
14	TVDD	–	Power supply for output buffer	
15	DVDD	–	Digital power supply	
16	DVSS	–	Digital ground	
17	PDN	I	Power down and reset	L
18	TST1	I	Test pin	
19	CAD1	I	Chip address 1 pin	
20	CAD0	I	Chip address 0 pin	
21	LOUT4	O	Analog output of DAC 4 L channnel	
22	ROUT4	O	Analog output of DAC 4 R channnel	
23	LOUT3	O	Analog output of DAC 3 L channnel	
24	ROUT3	O	Analog output of DAC 3 R channnel	
25	LOUT2	O	Analog output of DAC 2 L channnel	
26	ROUT2	O	Analog output of DAC 2 R channnel	
27	LOUT1	O	Analog output of DAC 1 L channnel	
28	ROUT1	O	Analog output of DAC 1 R channnel	
29	TST2	–	No connect	
30	NC	–	No connect	
31	LIN	I	L chnnel analog input	
32	RIN	I	R chnnel analog input	
33	DZF2/OVF	O	Zero input detection 2 / Overflow detection of analog input	H
34	VCOM	O	Common voltage output	
35	VREFH	I	Reference voltage input	
36	AVDD	–	Analog power supply	
37	AVSS	–	Analog ground	
38	DZF1	O	Zero input detection 1	H
39	MCLK	I	Master clock input	
40	P/S	I	Parallel/serial input	
41	CSN	I	Chip select	L
42	CCLK	I	Control data clock	
43	CDTI	I	Control data input	
44	TDMO	I	TDM I/F format mode	

■ PD5957A (MAIN CONTROL ASSY: IC501) (For VSX-2014i)

• Main Microcomputer

● Pin Assignment (Top view)

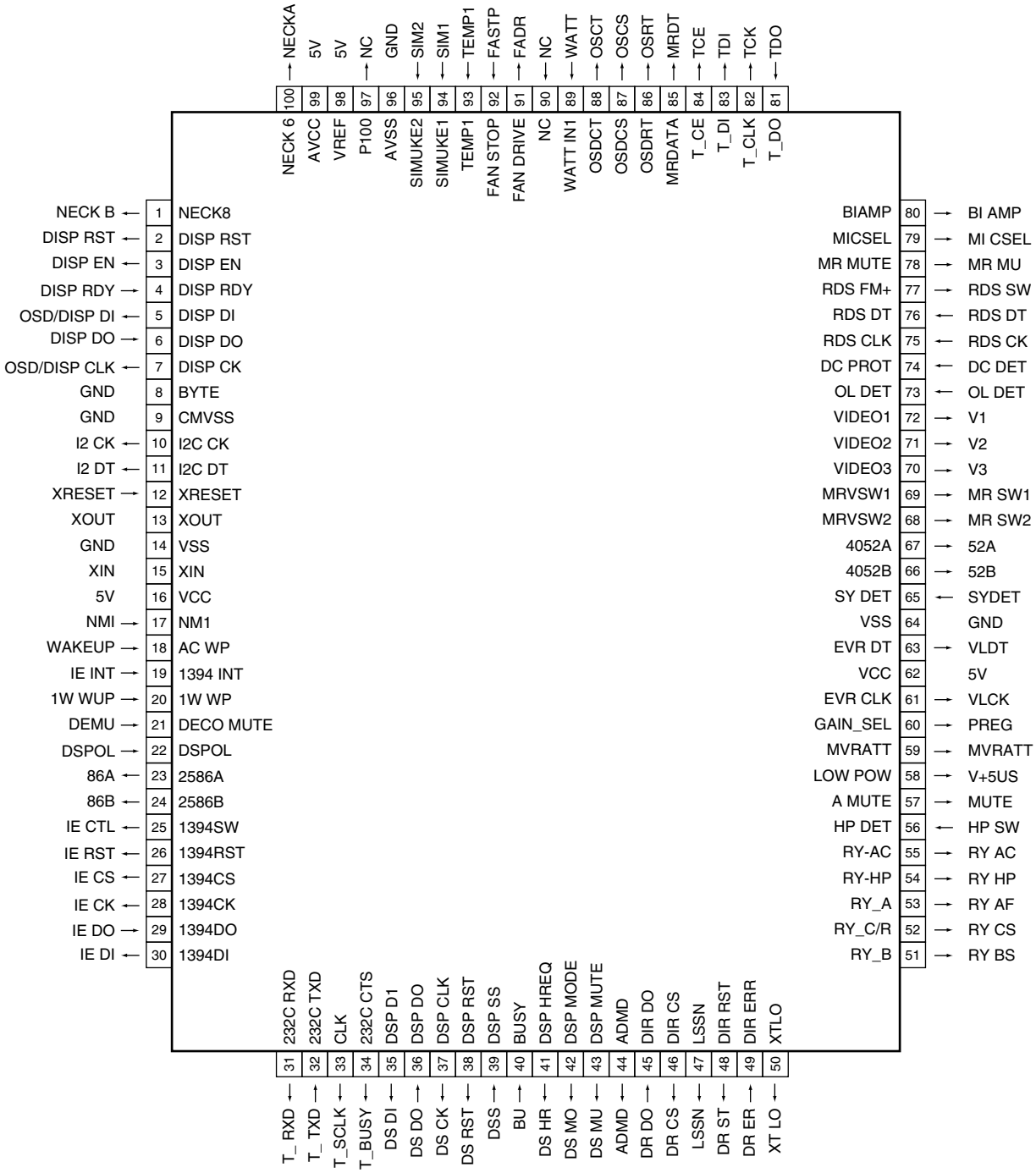

● Pin Function

No.	Pin Name	I/O	Pin Function	Active
1	NECK-8	O	Limiter control	
2	DISP RST	O	Display microcomputer reset signal L: reset, H: release reset (pulldown)	
3	DISP EN	O	Communication enabling signal to the display microcomputer	H
4	DISP RDY	I	Communication enabling signal from the display microcomputer	H
5	OSD/DISP DI	O	Communication data out signal with the OSD-IC/display microcomputer (N ch open drain: pullup)	
6	DISP DO	I	Communication data in signal with the display microcomputer (N ch open drain)	
7	OSD/DISP CLK	O	Communication clock signal with the OSD-IC/display microcomputer	
8	GND	–	Ground	
9	CNVSS	–	5.1kΩ pulldown	
10	–	O	L" fixed	
11	–	O	L" fixed	
12	XRESET	–	Reset	
13	XOUT	–	Oscillator	
14	GND	–	Ground	
15	XIN	–	Oscillator	
16	5V	–	5V power supply	
17	NMI	I	Cannot use it as usual input port (100kΩ pullup)	
18	WAKEUP	I	Wakeup	H
19	1394 INT	I	INT for 1394 (Not used) Standby with the circuit.	
20	1W WUP	I	Wakeup signal at standby (from the display microcomputer) (pulldown)	H
21	DECO MUTE	I	Boot success detecting port of 1st DSP	L
22	DSP OL	O	Communication enabling signal to the display microcomputer	H
23	2586A	O	VIDEO Component SW Control	
24	2589B	O	VIDEO Component SW Control	H
25	1394 SW	O	1394 / DIR Control Signal H : 1393 L : DIR	
26	1394 RST	O	Reset for 1394 (Not used "L" fixed.)	
27	1394 CS	O	Standby for 1394 (Not used "L" fixed.)	H
28	1394 CK	O	CK for 1394	
29	1394 DO	I	DO for 1394	
30	1394 DI	O	DI for 1394	
31	232C RXD	O	For 232C rewriting (data output)	
32	232C TXD	I	For 232C rewriting (data input)	
33	CLK	-	Not used	
34	232C CTS	O	For 232C rewriting (communication permission)	
35	DSP DI	O	Communication data out signal with the DSP microcomputer	
36	DSP DO	I	Communication data in signal with the DSP microcomputer	
37	DSP CLK	O	Communication clock signal with the DSP microcomputer	
38	DSP RST	O	DSP microcomputer reset signal L: reset, H: release reset	L
39	DSP SS	O	Slave select signal to DSP microcomputer	L
40	BUSY	I	MCACC used	H
41	DSP HREQ	O	Error detection signal of DSP microcomputer	H
42	DSP MODE	O	Mode selection of DSP microcomputer (ROM/RAM) H: ROM mode, L: RAM (PPP) mode	H
43	DSP MUTE	O	DSP Assy mute	H
44	ADMD	O	DSP Analog / Digital select signal H : Digital, L : Analog	H
45	DIR DO	I	Communication data in signal with the DIR/DAC	
46	DIR CS	O	Communication chip select signal with the DIR/DAC	L
47	LSSN	O	DSP SP Config = LSSN Setting	H
48	DIR RST	O	DIR reset signal	L
49	DIR ERR	I	Lock/Unlock signal from DIR	H
50	XTLO	O	Selection X'tal to DIR	L

No.	Pin Name	I/O	Pin Function	Active
51	RY BS	O	Speaker relay B ON/OFF	H
52	RY C/R	O	Rear / Center relay ON / OFF	H
53	RY A	O	Speaker relay A ON/OFF	H
54	RY- HP	O	Headphone relay ON / OFF	H
55	RY- AC	O	AC relay ON / OFF	H
56	HP DET	I	Headphone detection L : detected.	L
57	A MUTE	O	System mute L: Mute ON	L
58	Low Consuh Ption	O	Power supply control for system mute	L
59	MVR ATT	O	Master vollllllllume att control	
60	GAIN SEL	O	Pregain select signal	
61	EVR CLK	O	Clock signal for esectronic volume and function SW	
62	5V	–	5V power supply	
63	EVR DT	O	Data signal for esectronic volume and function SW	
64	GND	–	Ground	
65	SY DET	O	Sync detection (S-VIDEO ditection)	H
66	4052A	O	Output switching control signal of S-VIDEO and composite Video	
67	4052B	O	Output switching control signal of S-VIDEO and composite Video	
68	MRVSW2	O	Multi room function SW control	
69	MRVSW1	O	Multi room function SW control	
70	VIDEO3	O	Video input selector control	
71	VIDEO2	O	Video input selector control	
72	VIDEO1	O	Video input selector control	
73	OL DET	I	Amp. overload detection L: Detection	L
74	DC PROT	I	DC detection L: Detection	L
75	RDS CLK	I	Clock signal from RDS	
76	RDS DT	I	Data signal from RDS	
77	RDS FM+	O	Power supply control for RDS IC	H
78	MR MUTE	O	Multi room mute L: Mute ON	L
79	MICSEL	O	MIC select	H
80	BIAMP	O	Output switching control of surround back ch L : BiAMP, H : Normal	L
81	TUNED DO	I	Data input signal of tuner contror	H
82	TUNER CLK	O	Clock signal of tuner control	H
83	TUNER DI	O	Data output signal of tuner control	L
84	TUNER CE	O	Chip select signal of tuner control	L
85	MRDATA	O	Data signal of : multi room Volume	
86	OSDRST	O	OSD-IC reset signal L: reset H: release reset	L
87	OSDCS	O	OSD-IC chip select signal	
88	OSDCT	O	OSD-IC data mute L : mute	
89	WATT IN1	I	Wattage detection Level detection with A/D	A/D
90	NC	I	Not used	
91	FAN DRIVE	O	FAN control H : drive	H
92	FAN STOP	I	Fan forced stop detection	L
93	TEMP1	I	Temperature detection Level detection with A/D	A/D
94	SIMUKE1	I	Destination read 1	
95	SIMUKE2	I	Destination read 2	H
96	AVSS	–	Connect to VSS	
97	–	O	NC	L
98	VREF	–	Connect to VCC	
99	AVCC	–	Connect to VCC	
100	NECK_6	O	ATT control of VH (power supply for Voltage Amplifier)	L

■ PE5403A (DISPLAY ASSY: IC3001)

• Display Microcomputer

● Pin Assignment (Top view)

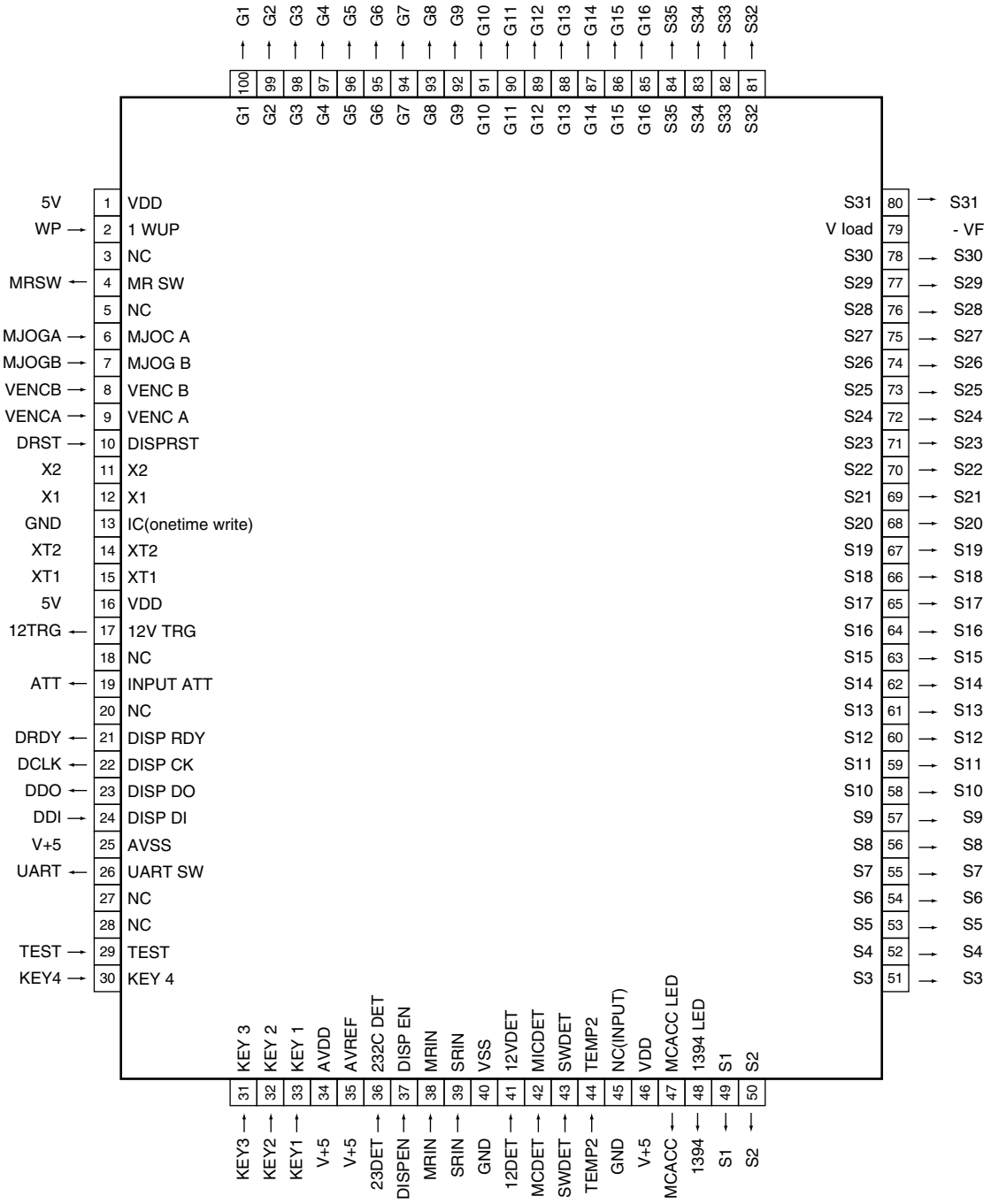

● Pin Function

No.	Pin Name	I/O	Pin Function	Active
1	VDD	–	VDD(5V)power supply	
2	1WUP	I	Wakeup	H
3	NC	–	NC	
4	MR SW	O	Multi room input Pioneer / others L: Pioneer, H : Others	L
5	NC	–	NC	
6	MJOG A	I	MULTI JOG input A	
7	MJOG B	I	MULTI JOG input B	
8	VENCB	I	Volume – direction	
9	VENCA	I	Volume + direction	
10	DISPRST	I	Reset signal in put	
11	X2	–	Input clock 5MHz	
12	X1	–	Input clock 5MHz	
13	IC	–	GND	
14	XT2	–	NC	
15	XT1	–	NC	
16	VDD	–	5V power supply	
17	12V TRG	O	12V Trigger output control " H" at ON	
18	NC	–	NC	
19	INPUT ATT	O	INPUT Atteneuator H : ATT ON	
20	NC	–	NC	
21	DISP RDY	O	Communication enabling signal to the main microcomputer	
22	DISP CK	O	Communication clock signal with the main microcomputer	
23	DISP DO	O	Communication data in signal with the main microcomputer	
24	DISP DI	I	Communication data out signal with the main microcomputer	
25	AVSS	–	Ground	
26	UART SW	O	SR+ / 232C data selector control	
27	NC	–	NC	
28	NC	–	NC	
29	TEST	I	TEST Mode for checker (100kΩ pull down)	H
30	KEY 4	I	KEY AD input	
31	KEY 3	I	KEY AD input	
32	KEY 2	I	KEY AD input	
33	KEY 1	I	KEY AD input	
34	AVDD	–	V+5	
35	AVREF	–	5V reference voltaage	
36	232C DET	I	For 232C signal input detection	
37	DISP EN	I	Communication enabling signal from the main microcomputer	
38	MRIN	I	Remote control input of sub room	
39	SRIN	I	Remote control input of main room	
40	VSS	–	Ground	
41	12VDET	I	12V TRIGGER Voltage detection	
42	MICDET	I	MIC detection	
43	SWDET	I	SW detection	
44	TEMP2	I	Temperature detection Level 2	
45	NC	–	NC	
46	VDD	–	V+5	
47	MCACCLED	O	MCACC LED	
48	1394LED	O	1394 LED	
49	S1	O	FL P_35s Drive	
50	S2	O	FL P_34s Drive	

No.	Pin Name	I/O	Pin Function	Active
51	S3	O	FL p_33s Drive	
52	S4	O	FL p_32s Drive	
53	S5	O	FL p_31s Drive	
54	S6	O	FL p_30s Drive	
55	S7	O	FL p_29s Drive	
56	S8	O	FL p_28s Drive	
57	S9	O	FL p_27s Drive	
58	S10	O	FL p_26s Drive	
59	S11	O	FL p_25s Drive	
60	S12	O	FL p_24s Drive	
61	S13	O	FL p_23s Drive	
62	S14	O	FL p_22s Drive	
63	S15	O	FL p_21s Drive	
64	S16	O	FL p_20s Drive	
65	S17	O	FL p_19s Drive	
66	S18	O	FL p_18s Drive	
67	S19	O	FL p_17s Drive	
68	S20	O	FL p_16s Drive	
69	S21	O	FL p_15s Drive	
70	S22	O	FL p_14s Drive	
71	S23	O	FL p_13s Drive	
72	S24	O	FL p_12s Drive	
73	S25	O	FL p_11s Drive	
74	S26	O	FL p_10s Drive	
75	S27	O	FL p_ 9s Drive	
76	S28	O	FL p_ 8s Drive	
77	S29	O	FL p_ 7s Drive	
78	S30	O	FL p_ 6s Drive	
79	V Load	–	-VF power supply	
80	S31	O	FL p_ 5s Drive	
81	S32	O	FL p_ 4s Drive	
82	S33	O	FL p_ 3s Drive	
83	S34	O	FL p_ 2s Drive	
84	S35	O	FL p_ 1s Drive	
85	G16	O	FL p_16g Drive	
86	G15	O	FL p_15g Drive	
87	G14	O	FL p_14g Drive	
88	G13	O	FL p_13g Drive	
89	G12	O	FL p_12g Drive	
90	G11	O	FL p_11g Drive	
91	G10	O	FL p_10g Drive	
92	G9	O	FL p_ 9g Drive	
93	G8	O	FL p_ 8g Drive	
94	G7	O	FL p_ 7g Drive	
95	G6	O	FL p_ 6g Drive	
96	G5	O	FL p_ 5g Drive	
97	G4	O	FL p_ 4g Drive	
98	G3	O	FL p_ 3g Drive	
99	G2	O	FL p_ 2g Drive	
100	G1	O	FL p_ 1g Drive	

■ TSB43CA42ZGW (1394 ASSY : IC201)

• iceLynx-Micro

● Pin Arrangement (Top view)

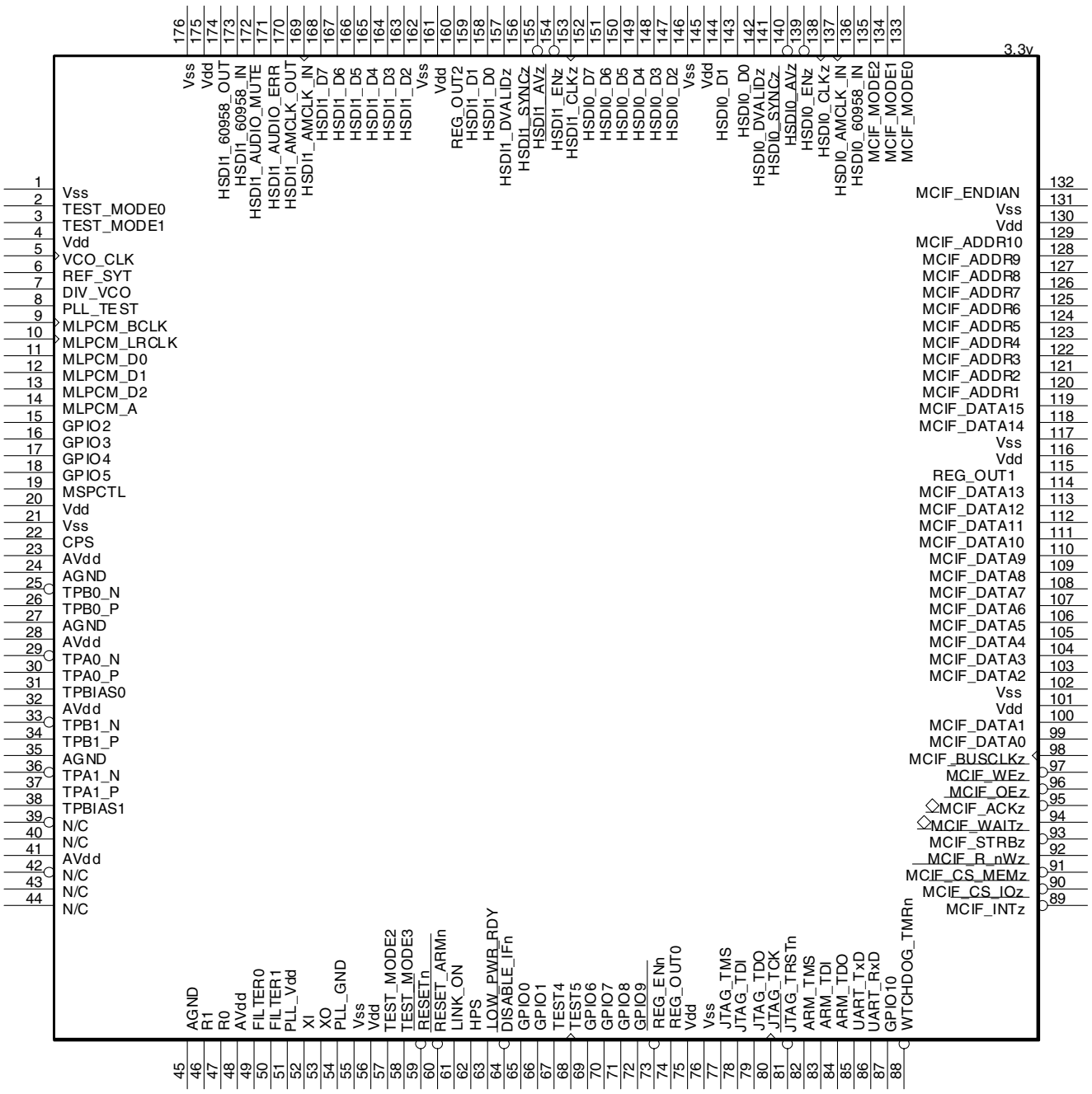

● Block Diagram

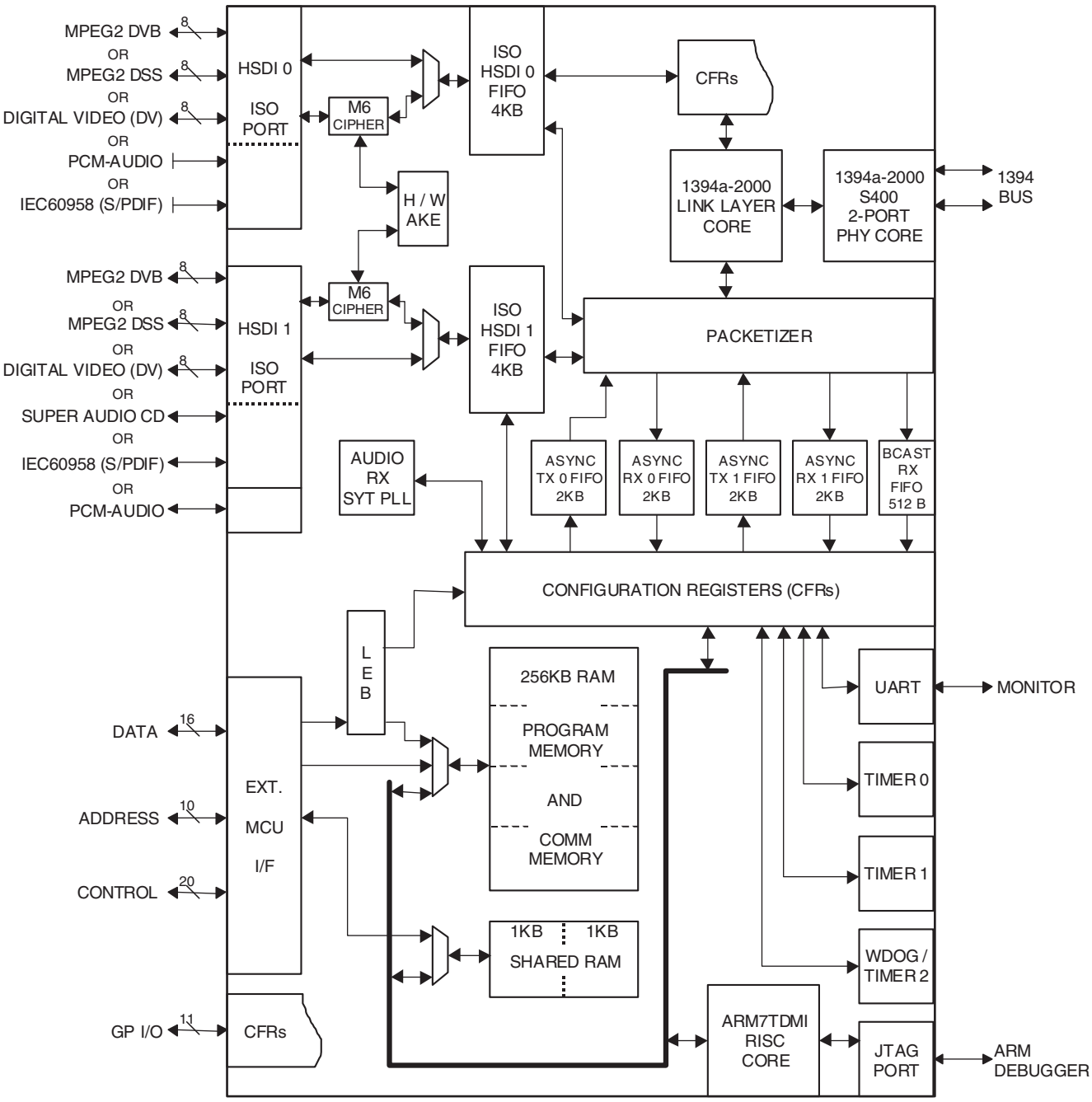

● Pin Function

Miscellanous Pins

No.	Pin Name	I/O	Pin Function
64	DISABLE_IFn	I	Interface disable. When asserted, the interfaces are put into a high-Z state. Interfaces include: ex-CPU, HSDI, GPIO, and WTCH_DG_TMRn.
62	HPS	I	Host power status. This indicates the power status of the external system to iceLynx-Micro. A rising edge indicates the system CPU has been turned ON. (The internal ARM must wake up.) A falling edge indicates the system CPU has been turned OFF. (The internal ARM decides if power down is necessary.)
63	LOW_PWR_RDY	O	Output to system to indicate iceLynx-Micro is ready to go into a low power state. The ARM and WTCH_DG_TMRn control this pin.
88	WTCH_DG_TMRn	O	Watch dog timer (for the ARM). iceLynx-Micro hardware asserts this pin whenever ARM software has not updated the Timer2 register within the allowed time period.
60	RESET_ARMn	I	ARM reset. This signal resets the internal ARM processor.
59	RESETn	I	Device reset. This signal resets all logic.This includes the PHY,link core, memory, the ARM, and random logic.

Power and Ground Pins

No.	Pin Name	I/O	Pin Function
1,21,55,76, 102,117,131, 146,162,176	VSS	–	Digital ground
24,27,35,45	AGND	–	Analog ground
54	PLL_GND	–	PLL ground
4,20,56,75, 101,116,130, 145,161,175	VDD	–	Digital power supply. Must be set to 3.3-V nominal.
23,28,32,41,48	AVDD	–	Analog power supply. Must be set to 3.3-V nominal.
51	PLL_VDD	–	PLL power supply. Must be set to 3.3-V nominal.

Regulator Pins

No.	Pin Name	I/O	Pin Function
73	REG_ENn	I	Internal regulator enable. The iceLynx-Micro core voltage is 1.8 V. Internal regulators are used to regulate the 3.3-V VDD inputs to 1.8 V. This pin enables the regulators.
74	REG_OUT0	O	1.8-V regulator output. This pin must be connected to ground using a 0.1-µF capacitor.
115	REG_OUT1	O	1.8-V regulator output. This pin must be connected to ground using a 0.1-µF capacitor.
160	REG_OUT2	O	1.8-V regulator output. This pin must be connected to ground using a 0.1-µF capacitor.

External CPU Interface Pins

No.	Pin Name	I/O	Pin Function
95	MCIF_ACKz	I/O	MCIF acknowledge pin. Default active low. iceLynx-Micro asserts this signal if it has completed the MCIF request. This signal is driven when chip select (CS) is asserted. This signal is used for the following modes: • 68000 + wait I/O access • I/O Type-3 MPC850
120	MCIF_ADDR1	I	MCIF address 1 pin. This data pin is the least significant bit of the MCIF address bus. MCIF_ADDR0 is internally grounded. Only 16-bit addressing is allowed. MCIF_ADDR1 must be connected to the Address1 signal of the system CPU.

No.	Pin Name	I/O	Pin Function
121	MCIF_ADDR2	I	MCIF address 2 pin
122	MCIF_ADDR3	I	MCIF address 3 pin
123	MCIF_ADDR4	I	MCIF address 4 pin
124	MCIF_ADDR5	I	MCIF address 5 pin
125	MCIF_ADDR6	I	MCIF address 6 pin
126	MCIF_ADDR7	I	MCIF address 7 pin
127	MCIF_ADDR8	I	MCIF address 8 pin
128	MCIF_ADDR9	I	MCIF address 9 pin
129	MCIF_ADDR10	I	MCIF address 10 pin. This data pin is the most significant bit of the MCIF address bus.
98	MCIF_BUSCLKz	I	MCIF bus clock. This pin is only used for the MCIF synchronous mode. I/O Type-3 MPC850 and the memory access. This signal must be pulled high if not used.
90	MCIF_CS_IOz	I	MCIF chip select for all I/O MCIF modes.
91	MCIF_CS_MEMz	I	MCIF chip select for the memory MCIF mode.
99	MCIF_DATA0	I/O	MCIF data 0 pin. This data pin is the least significant bit of the MCIF data bus.
100	MCIF_DATA1	I/O	MCIF data 1 pin.
103	MCIF_DATA2	I/O	MCIF data 2 pin.
104	MCIF_DATA3	I/O	MCIF data 3 pin.
105	MCIF_DATA4	I/O	MCIF data 4 pin.
106	MCIF_DATA5	I/O	MCIF data 5 pin.
107	MCIF_DATA6	I/O	MCIF data 6 pin.
108	MCIF_DATA7	I/O	MCIF data 7 pin.
109	MCIF_DATA8	I/O	MCIF data 8 pin.
110	MCIF_DATA9	I/O	MCIF data 9 pin.
111	MCIF_DATA10	I/O	MCIF data 10 pin.
112	MCIF_DATA11	I/O	MCIF data 11 pin.
113	MCIF_DATA12	I/O	MCIF data 12 pin.
114	MCIF_DATA13	I/O	MCIF data 13 pin.
118	MCIF_DATA14	I/O	MCIF data 14 pin.
119	MCIF_DATA15	I/O	MCIF data 15 pin. This data pin is the most significant bit of the MCIF data bus.
132	MCIF_ENDIAN	I	MCIF endian pin. This sets the endianness for accesses between the external CPU and the internal iceLynx-Micro memory. This pin sets endianness for all MCIF modes. When set to 0, data is read/written to the ex-CPU exactly as it is stored in iceLynx-Micro memory. (Big endian) When set to 1, data is swapped on half-word and byte boundaries before it is read/written to the ex-CPU. (Little endian)
89	MCIF_INTz	O	MCIF Interrupt. This signal is push-pull (always asserted). It does not require a pull-up resistor.
133	MCIF_MODE0	I	MCIF mode 0. Used to select MCIF mode.
134	MCIF_MODE1	I	MCIF mode 1. Used to select MCIF mode.
135	MCIF_MODE2	I	MCIF mode 2. Used to select MCIF mode.
96	MCIF_OEz	I	MCIF output enable. Default active low. This input pin indicates if the system CPU wants to perform a MCIF read access. This signal is used for the following modes: • SH-3 I/O access • M16C/62 I/O access • Memory access This signal must be pulled high if not used.
92	MCIF_R_nWz	I	MCIF read/write pin. Default value for a read is 1. Default value for a write is 0.
93	MCIF_STRBz	I	MCIF strobe pin. Default active low. This pin is used (along with MCIF_CS_IOz) to validate the MCIF access. This signal is used for the following modes: • 68000 + wait I/O access • MPC850 I/O access When not used, this pin must be pulled high.
94	MCIF_WAITz	O	MCIF wait pin. Default active high. iceLynx-Micro asserts this signal if it is not ready to service an MCIF request. When not asserted, this signal is in a high-Z state. This signal is used for the following modes: • 68000 + wait I/O access • SH-3 I/O access • M16C/62 I/O access
97	MCIF_WEz	I	MCIF Write Enable. Default active low. This input pin indicates if the system CPU wants to perform a MCIF write access. This signal is used for the following modes: • SH-3 I/O access • M16C/62 I/O access • Memory access This signal must be pulled high if not used.

Universal Asynchronous Receiver Transmitter Pins

No.	Pin Name	I/O	Pin Function
86	UART_RxD	I	UART receive port. Data from the system is input to the UART buffer using this pin.
85	UART_TxD	O	UART transmit port. Data from the UART buffer is output to the system using this pin.

Joint Test Action Group (JTAG) and ARM Pins

No.	Pin Name	I/O	Pin Function
80	JTAG_TCK	I	JTAG clock pin. Both the boundary scan and ARM JTAG uses this input for the JTAG clock.
78	JTAG_TDI	I	JTAG test data input pin
79	JTAG_TDO	O	JTAG test data output pin
77	JTAG_TMS	I	JTAG test mode selector pin.
81	JTAG_TRSTn	I	JTAG reset pin. Both the boundary scan and ARM JTAG uses this input for the JTAG clock. **Note 1**: TSB43Cx43A/TSB43CA42 must have JTAG_TRSTn=0 for correct ARM interrupt operation. **Note 2**: JTAG_TRST must be asserted once after power-up for correct operation of the iceLynx-Micro.
83	ARM_TDI	I	ARM JTAG test data input pin
84	ARM_TDO	O	ARM JTAG test data output pin
82	ARM_TMS	I	ARM JTAG test mode selector pin

General-Purpose Input/Out Pins (GPIO)

No.	Pin Name	I/O	Pin Function
65	GPIO0	I/O	GPIO0. Can be programmed as general-purpose input, generalpurpose output, or specific function. Power-up default is input.
66	GPIO1	I/O	GPIO1. Can be programmed as general-purpose input, generalpurpose output, or specific function. Power-up default is input.
15	GPIO2	I/O	GPIO2. Can be programmed as general-purpose input, generalpurpose output, or specific function. Power-up default is input.
16	GPIO3	I/O	GPIO3. Can be programmed as general-purpose input, generalpurpose output, or specific function. Power-up default is input.
17	GPIO4	I/O	GPIO4. Can be programmed as general-purpose input, generalpurpose output, or specific function. Power-up default is input.
18	GPIO5	I/O	GPIO5. Can be programmed as general-purpose input, generalpurpose output, or specific function. Power-up default is input.
69	GPIO6	I/O	GPIO6. Can be programmed as general-purpose input, generalpurpose output, or specific function. Power-up default is input.
70	GPIO7	I/O	GPIO7. Can be programmed as general-purpose input, generalpurpose output, or specific function. Power-up default is input.
71	GPIO8	I/O	GPIO8. Can be programmed as general-purpose input, generalpurpose output, or specific function. Power-up default is input.
72	GPIO9	I/O	GPIO9. Can be programmed as general-purpose input, generalpurpose output, or specific function. Power-up default is input.
87	GPIO10	I/O	GPIO10. Can be programmed as general-purpose input, generalpurpose output, or specific function. Power-up default is input.

Physical Layer Pins

No.	Pin Name	I/O	Pin Function
29	TPA0_N	I/O	Twisted pair A differential signal terminals. For an unused port, TPAN and TPAP signals are left open (i.e., TSB43CA42 for Port 2).
36	TPA1_N	I/O	
42	TPA2_N	I/O	
30	TPA0_P	I/O	
37	TPA1_P	I/O	
43	TPA2_P	I/O	

No.	Pin Name	I/O	Pin Function
25	TPB0_N	I/O	Twisted pair B differential signal terminals. For an unused port, TPBN and TPBP signals are left open (i.e., TSB43CA42 for Port 2).
33	TPB1_N	I/O	
39	TPB2_N	I/O	
26	TPB0_P	I/O	
34	TPB1_P	I/O	
40	TPB2_P	I/O	
31	TPBIAS0	I/O	Twisted pair bias output. These signals provide the 1.86-V nominal bias voltage needed for proper operation of the twisted pair driver and receivers for signaling an active connection to a remote node. For an unused port, TPBIAS is left unconnected (i.e., TSB43CA42 for Port 2).
38	TPBIAS1	I/O	
44	TPBIAS2	I/O	
46	R1	–	Current setting resistors. These pins are connected to external resistors to set the internal operating currents and cable driver output currents.
47	R0	–	
49	FILTER0	I/O	PLL filter terminals. These terminals are connected to an external capacitor to form a lag-lead filter required for stable operation of the internal frequency-multiplier PLL, which is using the crystal oscillator.
50	FILTER1	I/O	
52	XI	–	Crystal oscillator inputs. These terminals connect to a 24.576-MHz parallel resonant fundamental mode crystal.
53	XO	–	
22	CPS	I	Cable power status. This input to iceLynx-Micro detects if cable power is present. This pin must be connected to the cable power through 390-kΩ resistor.
19	MSPCTL	I	Maximum speed of PHY. When this signal is high; S100 and S200 operation. When this signal is low; S100, S200, and S400 operation.
61	LINKON	O	Link-on output. This signal is asserted whenever LPS is low and a link-on packet is received from the 1394 bus.

High Speed Data Interface (HSDI) Port 0 Pins

No.	Pin Name	I/O	Pin Function
136	HSDI0_60958_IN	I	60958 data input
137	HSDI0_AMCLK_IN	I	Audio master clock input. This clock is used to decode the biphase encoding of 60958 data. This pin is also used to input the 1.5*BCLK for flow control mode.
140	HSDI0_AVz	O	HSDI port 0 available. Programmable. Default active low. For receive from 1394, this signal indicates if a 1394 packet is available in the receive buffer for reading. The HSDI_AV signal for MPEG2 data also depends on time stamp based release. For transmit to 1394 , this signal indicates buffer level in HSDI TX modes 8 and 9 by programming a CFR. If the buffer level is above a programmed level, HSDI_AV will be asserted.
138	HSDI0_CLKz	I	HSDI port 0 clock. Programmable. Default rising edge sample. This clock is used to operate the HSDI port 0 logic. In parallel mode, the maximum clock is 27 MHz. In serial mode, the maximum clock is 70 MHz. This signal is output to HSDI1_CLKz in pass-through mode. This signal is used as HSDI0_MLPCM_BCLK for DVD-audio transmit.
143	HSDI0_D0	I/O	HSDI port 0 data 0 pin. Data 0 is the least significant bit on the HSDI data bus. In serial mode, only HSDI0_D0 is used. This signal is output to HSDI1_D0 in pass-through mode. This signal is used as HSDI0_MLPCM_D0 for DVD-audio transmit.
144	HSDI0_D1	I/O	HSDI port 0 Data 1 pin This signal is output to HSDI1_D1 in pass-through mode. This signal is used as HSDI0_MLPCM_D1 for DVD-audio transmit.
147	HSDI0_D2	I/O	HSDI port 0 Data 2 pin This signal is output to HSDI1_D2 in pass-through mode. This signal is used as HSDI0_MLPCM_D2 for DVD-audio transmit.
148	HSDI0_D3	I/O	HSDI port 0 Data 3 pin This signal is output to HSDI1_D3 in pass-through mode. This signal is used as HSDI0_MLPCM_A for DVD-audio transmit.
149	HSDI0_D4	I/O	HSDI port 0 data 4 pin This signal is output to HSDI1_D4 in pass-through mode
150	HSDI0_D5	I/O	HSDI port 0 data 5 pin This signal is output to HSDI1_D5 in pass-through mode
151	HSDI0_D6	I/O	HSDI port 0 data 6 pin This signal is output to HSDI1_D6 in pass-through mode
152	HSDI0_D7	I/O	HSDI port 0 data 7 pin Data 0 is the most significant bit on the HSDI data bus. This signal is output to HSDI1_D7 in pass-through mode

No.	Pin Name	I/O	Pin Function
142	HSDI0_DVALIDz	I/O	HSDI port 0 data valid pin. Programmable. Default active high. This pin indicates if data on the HSDI data bus valid for reading or writing. For transmit to 1394, this signal is provided by the system with the data. For receive from 1394, iceLynx-Micro provides this signal with the data. For HSDI DV modes, this signal is used as HSDI0_FrameSync indicating DV frame boundary. This signal is output to HSDI1_DVALIDz in pass-through mode If not used in transmit mode, this signal is pulled low.
139	HSDI0_ENz	I	HSDI port 0 enable. Programmable. Default active low. Input by the system to enable the HSDI for both transmit to and receive from 1394. If not used, this signal is pulled enabled (low or high depending on the polarity set). The application can use HSDI_DVALID or HSDI_SYNC to validate the HSDI data. This signal is used as HSDI0_MLPCM_LRCLK for DVD-audio transmit.
141	HSDI0_SYNCz	I/O	HSDI port 0 sync signal. Programmable. Default active high. This signal indicates the start of packet. For transmit to 1394, this signal is provided by the system with the data. For receive from 1394, iceLynx-Micro provides this signal with the data. This signal is output to HSDI1_SYNCz in pass-through mode. If not used in transmit mode, this signal is pulled low or high depending on the polarity.

High Speed Data Interface (HSDI) Port 1 Pins

No.	Pin Name	I/O	Pin Function
169	HSDI1_AMCLK_IN	I	Audio master clock input. This clock is used to decode the biphase encoding of 60958 data. This pin also inputs the 1.5*BCK for flow control mode. MLPCM interface, HSDI1 audio port, and HSDI1 video port share IsoPathBuffer 1. Only one interface can access the buffer at a time.
170	HSDI1_AMCLK_OUT	O	Audio master clock output. This clock is derived from the VCO_CLK input. 60958 data output from iceLynx-Micro is biphase encoded using this clock.
171	HSDI1_AUDIO_ERR	O	Audio error signal. iceLynx-Micro asserts this signal whenever an audio error condition occurs. (Receive from 1394 only.)
172	HSDI1_AUDIO_MUTE	O	Audio mute status. iceLynx-Micro asserts this signal whenever an audio mute condition has occurred, and hardware has muted the HSDI1 audio interface. (Receive from 1394 only.)
173	HSDI1_60958_IN	I	60958 data input
174	HSDI1_60958_OUT	O	60958 data output This signal is also used as FLWCTRL_DVALID in flow control data valid mode.
155	HSDI1_AVz	O	HSDI port 1 available. Programmable. Default active low. For receive from 1394, this signal indicates if a 1394 packet is available in the receive buffer for reading. The HSDI_AV signal for MPEG2 data also depends on time stamp based release. For transmit to 1394, this signal indicates the buffer level in HSDI TX modes 8 and 9 by programming a CFR. This pin indicates buffer level in transmit mode by programming a CFR. If the buffer level is above a programmed level, HSDI_AV is asserted.
153	HSDI1_CLKz	I/O	HSDI port 1 clock. Programmable. Default rising edge sample. This clock is used to operate the HSDI port 1 logic. In parallel mode, the maximum clock is 27 MHz. In serial mode, the maximum clock is 70 MHz. This signal is used as HSDI1_SACD_BCLK for SACD transmit and receive. MLPCM interface, HSDI1 audio port, and HSDI1 video port share IsoPathBuffer 1. Only one interface can access the buffer at a time.
158	HSDI1_D0	I/O	HSDI port 1 data 0 pin. Data 0 is the least significant bit on the HSDI data bus. In serial mode, only HSDI0_D0 is used. This signal is used as HSDI1_SACD_D0 for SACD transmit and receive.
159	HSDI1_D1	I/O	HSDI port 1 data 1 pin. This signal is used as HSDI1_SACD_D1 for SACD transmit and receive.
163	HSDI1_D2	I/O	HSDI port 1 data 2 pin. This signal is used as HSDI1_SACD_D2 for SACD transmit and receive.

No.	Pin Name	I/O	Pin Function
164	HSDI1_D3	I/O	HSDI port 1 data 3 pin. This signal is used as HSDI1_SACD_D3 for SACD transmit and receive.
165	HSDI1_D4	I/O	HSDI port 1 data 4 pin. This signal is used as HSDI1_SACD_D4 for SACD transmit and receive.
166	HSDI1_D5	I/O	HSDI port 1 data 5 pin. This signal is used as HSDI1_SACD_D5 for SACD transmit and receive.
167	HSDI1_D6	I/O	HSDI port 1 data 6 pin. This signal is used as HSDI1_SACD_D6 for SACD transmit and receive.
168	HSDI1_D7	I/O	HSDI port 1 data 7 pin. Data 0 is the most significant bit on the HSDI data bus.
157	HSDI1_DVALIDz	I/O	HSDI port 1 data valid pin. Programmable. Default active high. This pin indicates if data on the HSDI data bus valid for reading or writing. For transmit to 1394, this signal is provided by the system with the data. For receive from 1394, iceLynx-Micro provides this signal with the data. For HSDI DV modes, this signal is used as HSDI0_FrameSync indicating DV frame boundary. If not used in transmit mode, this signal is pulled low.
154	HSDI1_ENz	I	HSDI port 1 enable. Programmable. Default active low. Input by the system to enable the HSDI for both transmit to and receive from 1394. If not used, this signal is pulled enabled (low or high depending on the polarity set). The application can use HSDI_DVALID or HSDI_SYNC to validate the HSDI data.
156	HSDI1_SYNCz	I/O	HSDI port 1 sync signal. Programmable. Default active high. This signal indicates the start of a packet. For transmit to 1394, this signal is provided by the system with the data. For receive from 1394, iceLynx-Micro provides this signal with the data. If not used in transmit mode, this signal is pulled low or high depending on the polarity. This signal is used as HSDI1_SACD_FRAME for SACD transmit and receive.

DVD-Audio Interface Pins

No.	Pin Name	I/O	Pin Function
14	MLPCM_A	I/O	Audio MLPCM interface ancillary data. Ancillary data is input/output using this pin. For DVD-Audio, MLPCM_LRCLK determines if ancillary left or ancillary right data is present. This signal also functions as FLWCTL_A in flow control mode
9	MLPCM_BCLK	I/O	Audio MLPCM interface bit clock. Multiple functions: • DVD audio BCK (I) • DVD audio BCK (O) • Flow control BCK (I/O) MLPCM interface, HSDI1 audio port, and HSDI1 video port share IsoPathBuffer 1. Only one interface can access the buffer at a time.
11	MLPCM_D0	I/O	Audio MLPCM interface D0. Contains channel 1 and channel 2 information. MLPCM_LRCLK determines which channel is present. This signal also functions as FLWCTL_D0 in flow control mode.
12	MLPCM_D1	I/O	Audio MLPCM interface D1. Contains channel 3 and channel 4 information. MLPCM_LRCLK determines which channel is present. This signal also functions as FLWCTL_D0 in flow control mode
13	MLPCM_D2	I/O	Audio MLPCM interface D2. Contains channel 5 and channel 6 information. MLPCM_LRCLK determines which channel is present. This signal also functions as FLWCTL_D0 in flow control mode
10	MLPCM_LRCLK	I/O	Audio MLPCM interface left-right clock. Multiple functions: • DVD audio LRCLK (I) • DVD audio LRCLK (O) • Flow control LRCLK (I/O)

Audio Phase Lock Loops Pins

No.	Pin Name	I/O	Pin Function
7	DIV_VCO	O	Output for external phase detector. This signal is the divided VCO_CLK. It used by the external phase detector to compare with the REF_SYT signal. The divide ratios are setup in CFR.
8	PLL_TEST	O	PLL test. This signal is used for internal TI testing and must be unconnected for normal operation.
6	REF_SYT	O	Output for external phase detector. This signal represents the SYT match for received audio or DV packets. The phase detector uses it as input to detect differences between the SYT match and the VCO clock.
5	VCO_CLK	I	Input from VCO. This signal generates internal audio and DV clocks for receive clock recovery. Audio frequency: 33.868 MHz or 36.864 MHz. DV frequency: 30.72 MHz, 27 MHz

Test Mode Pins

No.	Pin Name	I/O	Pin Function
2	TEST_MODE0	I/O	Test mode. Used for internal TI testing. Must be pulled low for normal operation.
3	TEST_MODE1	I/O	
57	TEST_MODE2	I/O	
58	TEST_MODE3	I/O	
67	TEST4	I/O	Factory test pin. Must tie to low for normal operation. Recommend connection to ground through a 1 kÉ∂ resistor.
68	TEST5	I/O	

SM5819AF (1394 ASSY : IC401)

• 6-channel DS-PCM Converter

● Pin Arrangement (Top view)

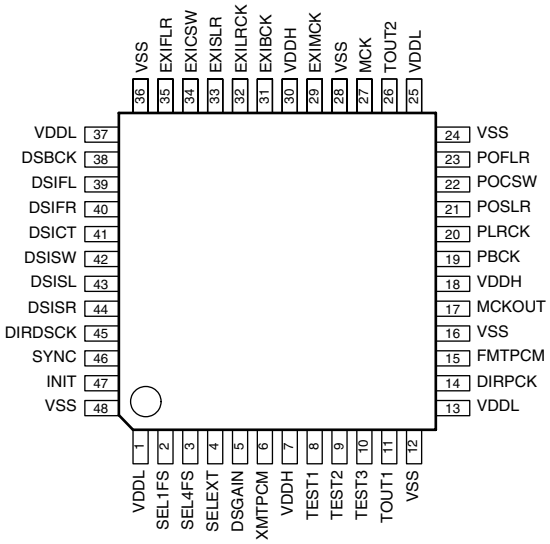

● Block Diagram

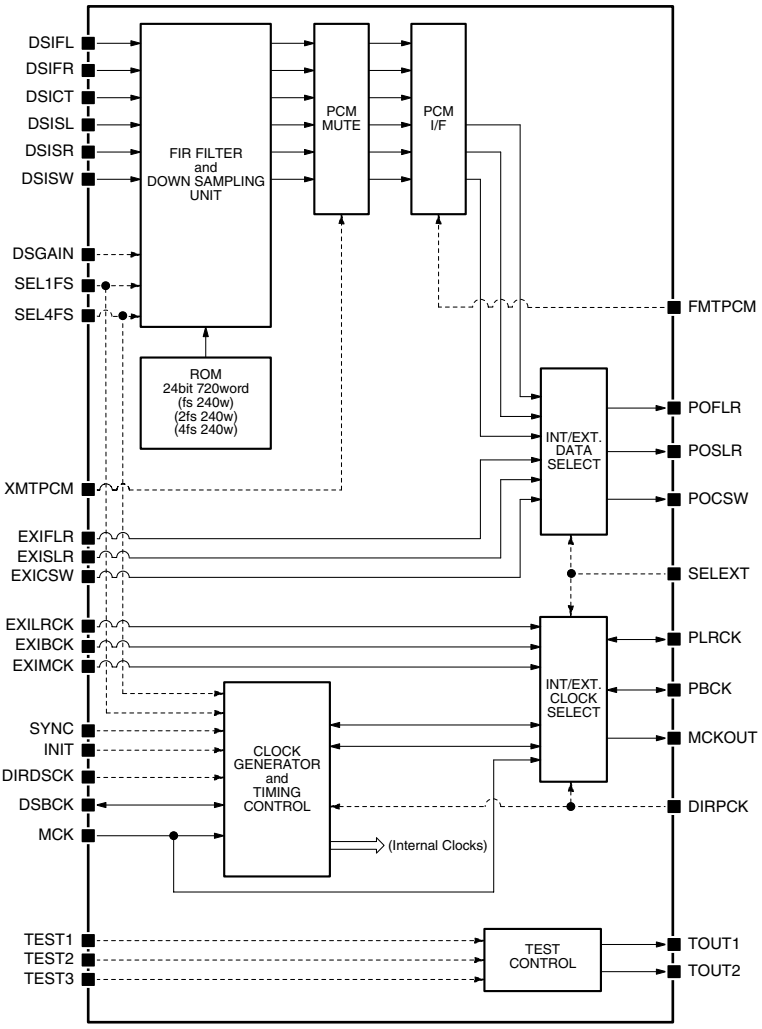

● Pin Function

No.	Name	I/O	Function
1	VDDL	–	Core power supply
2	SEL1FS	I	PCM output rate select 1 L: 2fs/4fs, H: fs
3	SEL4FS	I	PCM output rate select 2 L: 2fs, H: 4fs
4	SELEXT	I	fs/2fs/4fs output and external data output select L: fs/2fs/4fs data, H: external data (EXI**)
5	DSGAIN	I	DSD signal gain setting L: 100% modulation = 0dB, H: 50% modulation = 0dB
6	XMTPCM	I	PCM output mute control input L: Mute ON, H: Mute OFF
7	VDDH	–	I/O power supply
8	TEST1	I	Test input 1 (must be open or tie LOW for normal operation)
9	TEST2	I	Test input 2 (must be open or tie LOW for normal operation)
10	TEST3	I	Test input 3 (must be open or tie LOW for normal operation)
11	TOUT1	O	Test output 1
12	VSS	–	Ground
13	VDDL	–	Core power supply
14	DIRPCK	I	PCM output PBCK/PLRCK I/O select L: Output (master mode), H: Input (slave mode)
15	FMTPCM	I	PCM output format select L: MSB-first left-justified 32-bit, H: IIS 32-bit
16	VSS	–	Ground
17	MCKOUT	O	System clock output (selected by SELEXT)
18	VDDH	–	I/O power supply
19	PBCK	I/O	PCM output BCK bit clock
20	PLRCK	I/O	PCM output LRCK word clock
21	POSLR	O	PCM data output: surround left/right-channel
22	POCSW	O	PCM data output: center/subwoofer channel
23	POFLR	O	PCM data output: front left/right-channel
24	VSS	–	Ground
25	VDDL	–	Core power supply
26	TOUT2	O	Test output 2
27	MCK	I	Master clock input: 512fs (22.5792MHz, fs = 44.1kHz)
28	VSS	–	Ground
29	EXIMCK	I	External system clock input
30	VDDH	–	I/O power supply
31	EXIBCK	I	External PCM data BCK bit clock input
32	EXILRCK	I	External PCM data LRCK word clock input
33	EXISLR	I	External PCM data input: surround left/right-channel
34	EXICSW	I	External PCM data input: center/subwoofer channel
35	EXIFLR	I	External PCM data input: front left/right-channel
36	VSS	–	Ground
37	VDDL	–	Core power supply
38	DSBCK	I/O	DSD data input bit clock. Controlled by DIRDSCK
39	DSIFL	I	DSD data input: front left-channel
40	DSIFR	I	DSD data input: front right-channel
41	DSICT	I	DSD data input: center channel
42	DSISW	I	DSD data input: subwoofer channel
43	DSISL	I	DSD data input: surround left-channel
44	DSISR	I	DSD data input: surround right-channel
45	DIRDSCK	I	DSBCK I/O select L: input (slave), H: output (master)
46	SYNC	I	Forced synchronization input (active-HIGH edge)
47	INIT	I	Initialization input: Active-LOW, Resync on L -> H
48	VSS	–	Ground

7.3 CLEANING

Before shipping out the product, be sure to clean the following positions by using the prescribed cleaning tools:

Position to be cleaned	Cleaning tools
Fans	Cleaning paper : GED-008

8. PANEL FACILITIES

8.1 FRONT PANEL

Front panel

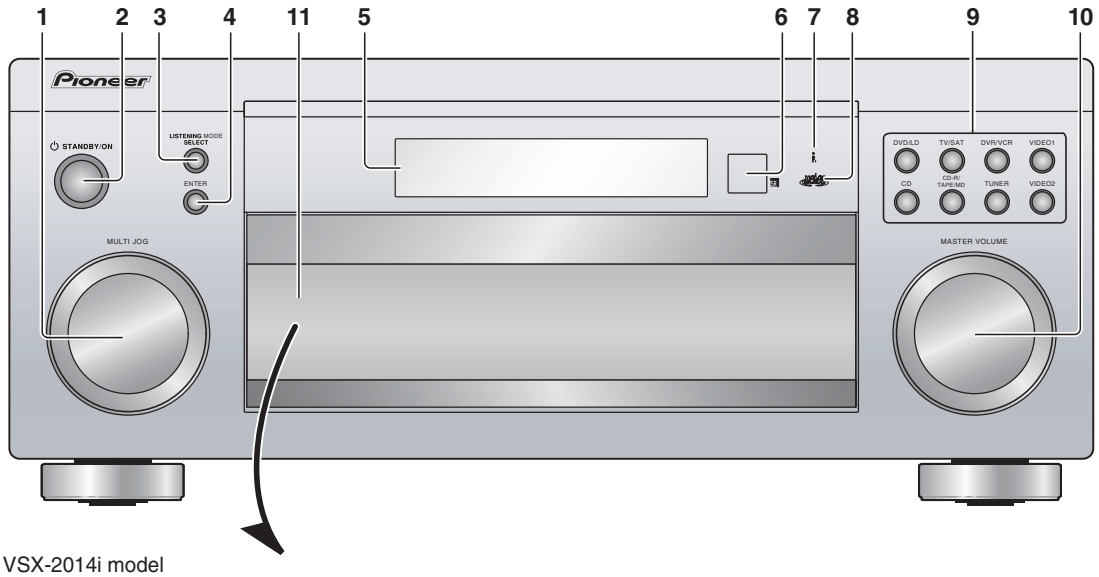

VSX-2014i model

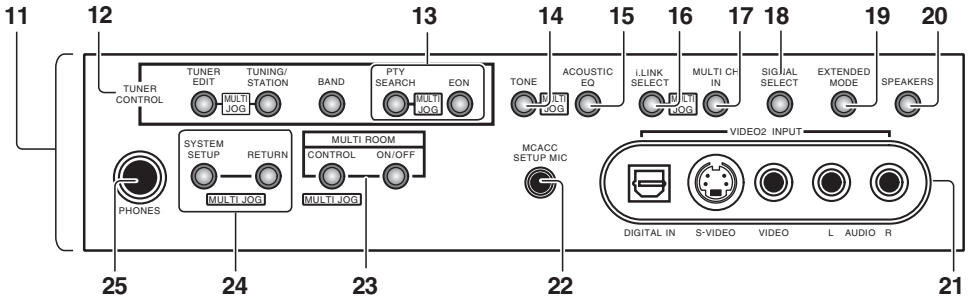

VSX-1014 model

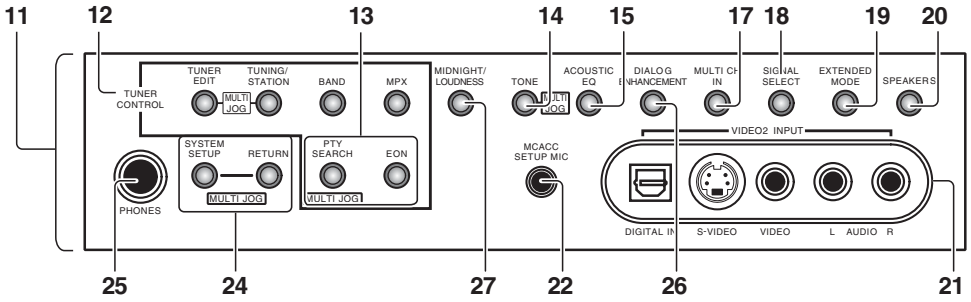

1 MULTI JOG dial
Use the MULTI JOG dial to select various settings and menu options.

2 ⏻ STANDBY/ON
Switches the receiver between on and standby.

3 LISTENING MODE SELECT
Use with the **MULTI JOG** dial to select the various listening modes .

4 ENTER

5 Character display

6 Remote sensor
Receives the signals from the remote control.

7 i.LINK indicator(VSX-2014i model only)
Lights when an i.LINK-equipped audio component is selected .

8 MCACC indicator
Lights when Acoustic Calibration EQ is on (Acoustic Calibration EQ is automatically set to **ALL CH ADJUST** after the Auto MCACC Setup or EQ Auto Setting is complete).

9 Input select buttons
Press to select an input source.

10 MASTER VOLUME dial

11 Front panel controls
To access the front panel controls, push gently on the lower third portion of the panel with your finger.

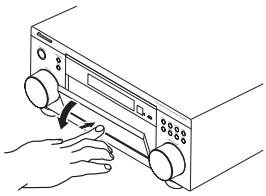

12 TUNER CONTROL

TUNER EDIT
Use with the **MULTI JOG** dial to memorize and name stations for recall.

TUNING/STATION
Use with the **MULTI JOG** dial to select station presets and radio frequencies.

BAND
Switches between AM and FM radio bands.

MPX (VSX-1014 model only)
Press to receive a radio broadcast in mono.

13 PTY SEARCH
Use this button to search for RDS program types.

EON
Use to search for programs that are broadcasting traffic or news information .

14 TONE
When the **STEREO** mode is selected, press this button to access the bass and treble controls, which you can then adjust with the **MULTI JOG** dial.

15 ACOUSTIC EQ
Press to select an Acoustic Calibration EQ setting.

16 i.LINK SELECT (VSX-2014i model only)
Use with the **MULTI JOG** dial to select unassigned i.LINK components.

17 MULTI CH IN
Press to select the component connected to the **MULTI CH IN** terminals (for example, a DVD-Audio player). See **Selecting the multichannel analog inputs** .

18 SIGNAL SELECT
Use to select an input signal.

19 EXTENDED MODE
Selects the surround back channel mode or virtual surround back mode.

20 SPEAKERS
Use to change the speaker system.

21 VIDEO2 INPUT
See **Connecting to the front panel video terminal**.

22 MCACC SETUP MIC jack
Use to connect the supplied microphone.

23 MULTI ROOM controls (VSX-2014i model only)
If you've made multi-room connections (see **Multi-room listening**) use these buttons to control the sub room from the main room (see **Using the sub room controls**).

24 System Setup menu controls

SYSTEM SETUP
Use with the **MULTI JOG** dial to access the System Setup menu.

RETURN
Press to confirm and exit the current menu screen.

25 PHONES jack
Use to connect headphones. When the headphones are connected, there is no sound output from the speakers.

26 DIALOG ENHANCEMENT (VSX-1014 model only)
Use to make dialog stand out when watching TV or a movie.

27 MIDNIGHT/LOUDNESS (VSX-1014 model only)
Use Midnight when listening to movie soundtracks at low volume. Use Loudness to boost the bass and treble at low volume .

8.2 DISPLAY

Display

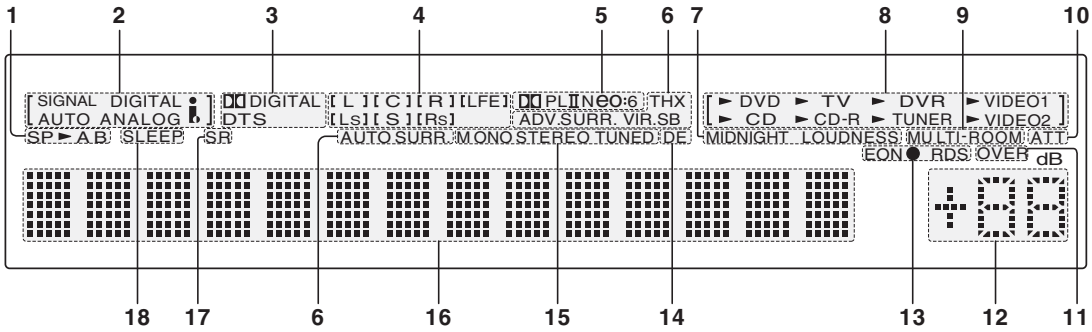

1 Speaker indicators
Lights to indicate the current speaker system, **A** and/or **B**

2 SIGNAL SELECT indicators
Lights to indicate the type of input signal assigned for the current component:

AUTO
Lights when **AUTO** signal select is on.

DIGITAL
Lights when a digital audio signal is detected.

ANALOG
Lights when an analog signal is detected.

(VSX-2014i model only)
Lights when the currently selected input signal is input from the i.LINK connection.

3 Digital format indicators

DIGITAL
Lights when a Dolby Digital encoded signal is detected.

DTS
Lights when a DTS encoded signal is detected.

4 Program format indicators
These change according to which channels are active in Dolby, DTS, DVD-A and SACD sources.

LS, **S** and **RS** will light at the same time to indicate 6.1channel sources.

- **L** – Left front channel
- **C** – Center channel
- **R** – Right front channel
- **LS** – Left surround channel
- **S** – Surround channel (mono) or surround back channel
- **RS** – Right surround channel
- **LFE** – Low frequency effects channel

5 Matrix decoding format indicators

PLII
This lights to indicate Pro Logic II / Pro Logic IIx decoding (see **Listening in surround sound** for more on this).

Neo:6
When one of the Neo:6 modes of the receiver is on, this lights to indicate Neo:6 processing (see **Listening in surround sound** for more on this).

6 Listening mode indicators

THX
Lights when one of the Home THX modes is selected.

VIR.SB
Lights during Virtual surround back processing.

ADV.SURR.
Lights when one of the Advanced Surround modes has been selected.

AUTO SURR.
Lights when the Auto Surround feature is switched on (see **Auto playback**).

7 MIDNIGHT / LOUDNESS
When Midnight or Loudness listening is switched on, the corresponding indicator shows in the display.

8 Input source indicators
Light to indicate the input source you have selected.

9 MULTI-ROOM (VSX-2014i model only)
Lights when the multi-room feature is active .

10 ATT
Lights when **INPUT ATT** is used to attenuate (reduce) the level of the analog input signal.

11 OVER
Lights to indicate that the level of an analog source is too high. Use the attenuator(**INPUT ATT**) to reduce it.

12 Master volume level
Shows the overall volume level. **–80dB** indicates the minimum level, and **+12dB** indicates the maximum level.

13 EON / RDS indicators

EON ●
EON lights when the EON mode is set, and flashes during reception of an EON broadcast. The ● indicator lights when the current station carries the EON service .

RDS
Lights when an RDS broadcast is received

14 DE
Lights when Dialog Enhancement (**DIALOGE**) is switched on .

15 TUNER indicators

STEREO
Lights when a stereo FM broadcast is being received in auto stereo mode.

MONO
Lights when the mono mode is set using the **MPX** button.

TUNED
Lights when a broadcast is being received.

16 Character display
Displays various system information (for example, the reason an operation is not possible may flash in the display).

17 SR
Lights when the SR+ control mode has been switched on (see Using the SR+ mode with a Pioneer plasma display).

18 SLEEP
Lights when the receiver is in sleep mode.

8.3 REMOTE CONTROL UNIT

Remote control

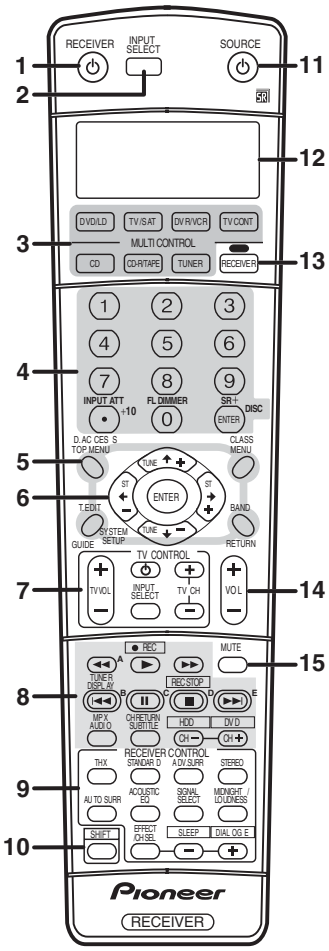

1 RECEIVER ⏻
This switches between standby and on for this receiver.

2 INPUT SELECT
Use to select the input source.

3 MULTI CONTROL buttons
Press to select control of other components.

4 Number buttons and other receiver/component controls
Use the number buttons to directly select a radio frequency or the tracks on a CD, DVD, etc.

DISC (ENTER) can be used to enter commands for TV and can also be used to select a disc in a multi-CD player.

The following are accessed by pressing the **RECEIVER** button first:

INPUT ATT
Attenuates (lowers) the level of an analog input signal to prevent distortion.

FL DIMMER
Dims or brightens the display. Switching the dimmer to lowest setting will also switch off the MCACC and i.LINK indicators.

SR+
Switches the SR+ mode on/off .

5 Tuner/component control buttons/SYSTEM SETUP

The following button controls (except **SYSTEM SETUP**) can be accessed after you have selected the corresponding **MULTI CONTROL** button (**TUNER**, **DVD/ LD**, **TV/SAT**, etc.)

D. ACCESS
After pressing, you can access a radio station directly using the number buttons.

TOP MENU
Displays the disc 'top' menu of a DVD.

T. EDIT
Press to memorize and name a station for recall.

GUIDE
Displays the guides on a digital TV.

SYSTEM SETUP
(Press **RECEIVER** first to access)
Use to access the System Setup menu.

CLASS
Switches between the three banks (classes) of radio station presets.

MENU
Displays the disc menu of DVD-Video discs. It also displays TV menus.

BAND
Switches between the tuner AM and FM bands.

RETURN
Press to confirm and exit the current menu screen (also use to return to the previous menu with DVDs).

6 ⇦⇨⇩⇧ (TUNE/ST +/–) /ENTER
Use the arrow buttons when setting up your surround sound system . Also used to control DVD menus/options and for deck 1 of a double cassette deck player. Use the **TUNE +/–** buttons to find radio frequencies and use **ST +/–** to find preset stations .

7 TV CONTROL buttons

These buttons are dedicated to control the TV assigned to the **TV CONT** button. Thus if you only have one TV to hook up to this system assign it to the **TV CONT MULTI CONTROL** button. If you have two TVs, assign the main TV to the **TV CONT** button.

TV ⏻
Use to turn on/off the power of the TV.

TV VOL +/–
Use to adjust the volume on your TV.

INPUT SELECT
Use to select the TV input signal.

TV CH +/–
Use to select channels.

8 Component control buttons

The main buttons (►, ■, etc.) are used to control a component after you have selected it using the **MULTI CONTROL** buttons.

The controls above these buttons can be accessed after you have selected the corresponding **MULTI CONTROL** button (for example **DVD/LD**, **DVR/VCR** or **TV/SAT**).

TUNER DISPLAY
Switches between named station presets, radio frequencies and RDS information.

MPX
Switches between stereo and mono reception of FM broadcasts. If the signal is weak then switching to mono will improve the sound quality.

AUDIO
Changes the audio language or channel on DVD discs.

CH RETURN
Returns to the last channel selected with SAT and some TVs.

SUBTITLE
Displays/changes the subtitles included in multilingual DVD-Video discs.

CH +/–
Use to select channels when using a TV, VCR, DVR, etc.

The following DVR controls can be accessed by pressing **SHIFT** :

● **REC**
Starts recording.

REC STOP
Stops recording.

HDD/DVD
These buttons switch between the hard disk and DVD controls for DVD/HDD recorders.

9 RECEIVER CONTROL buttons

THX
Press to select a Home THX listening mode.

STANDARD
Press for Standard decoding and to switch between the various Pro Logic IIx and Neo:6 options.

ADV. SURR
Use to switch between the various surround modes.

STEREO
Switches between direct and stereo playback. Direct playback bypasses the tone controls and any other signal processing for the most accurate reproduction of a source.

AUTO SURR
Press to have the receiver automatically detect what kind of source you're playing and select multichannel or stereo playback as necessary.

ACOUSTIC EQ
Press to select an Acoustic Calibration EQ setting.

SIGNAL SELECT
Use to select an input signal.

MIDNIGHT/LOUDNESS
Use Midnight when listening to movie soundtracks at low volume. Use Loudness to boost the bass and treble at low volume.

EFFECT/CH SEL
Press repeatedly to select a channel, then use –/+ to adjust the level. Also adjusts the level of the Advanced Surround effects as well as Dolby Pro Logic IIx Music and Neo:6 Music parameters. You can then use the **+** and **–** buttons to make these adjustments.

+/–
Use to adjust the effect and channel levels, as well as to change Dolby Pro Logic IIx and Neo:6 Music parameter settings.

SLEEP (SHIFT & –)
Use to put the receiver in sleep mode and select the amount of time before the receiver turns off.

DIALOG E (SHIFT & +)
Use to make dialog stand out when watching TV or a movie .

10 SHIFT
Press to access the DVR controls (above the component control buttons) as well as some **RECEIVER** controls.

11 ⏻ SOURCE
Press to turn on/off other components connected to the receiver .

12 Character display (LCD)
This display shows information when transmitting control signals.

The following commands are shown when you're setting the remote to control other components :

SETUP
Indicates the setup mode, from which you choose the options below.

PRESET
See Selecting preset codes directly.

LEARN
See Programming signals from other remote controls.

DIRECTF
See Direct function.

ERASE
See Erasing one of the remote control button settings.

RESET
See Erasing all of the remote control presets.

READ ID
See Confirming preset codes.

13 RECEIVER
Switches the remote to control the receiver (used to select the green commands above the number buttons (**INPUT ATT**, etc). Also use this button to set up surround sound .

14 VOL +/–
Use to set the listening volume.

15 MUTE
Mutes the sound or restores the sound if it has been muted (adjusting the volume also restores the sound).

Operating range of remote control unit

The remote control may not work properly if:
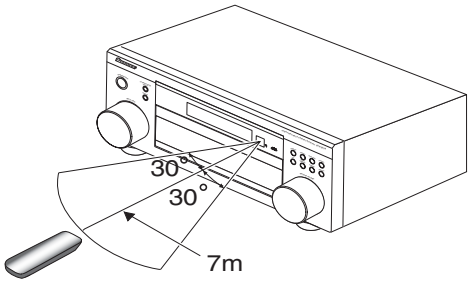
- There are obstacles between the remote control and the receiver's remote sensor.
- Direct sunlight or fluorescent light is shining onto the remote sensor.
- The receiver is located near a device that is emitting infrared rays.
- The receiver is operated simultaneously with another infrared remote control unit.