Pioneer

Service Manual

ORDER NO.
RRV4343

AV Receiver

VSX-322-K

THIS MANUAL IS APPLICABLE TO THE FOLLOWING MODEL(S) AND TYPE(S).

Model	Type	Power Requirement	Remarks
VSX-322-K	SYXE8	AC 220 V to 230 V	
VSX-322-K	DLPWXE	AC 220 V to 240 V	

This service manual should be used together with the following manual(s).

Model No.	Order No.	Remarks
HTP-071/SYXE8	RRV4273	VSX-321-K-P/SYXE8, DLPWXE

For SPECIFICATIONS and PANEL FACILITIES, refer to the operating instructions.

PIONEER CORPORATION 1-1, Shin-ogura, Saiwai-ku, Kawasaki-shi, Kanagawa 212-0031, Japan
PIONEER ELECTRONICS (USA) INC. P.O. Box 1760, Long Beach, CA 90801-1760, U.S.A.
PIONEER EUROPE NV Haven 1087, Keetberglaan 1, 9120 Melsele, Belgium
PIONEER ELECTRONICS ASIACENTRE PTE. LTD. 253 Alexandra Road, #04-01, Singapore 159936
ⓒ**PIONEER CORPORATION 2012**

K-ZZZ JUNE 2012 Printed in Japan

1. CONTRAST OF MISCELLANEOUS PARTS

NOTES:
- *Parts marked by "NSP" are generally unavailable because they are not in our Master Spare Parts List.*
- *The ⚠ mark found on some component parts indicates the importance of the safety factor of the part. Therefore, when replacing, be sure to use parts of identical designation.*
- *Screws adjacent to ▼ mark on product are used for disassembly.*
- *For the applying amount of lubricants or glue, follow the instructions in this manual. (In the case of no amount instructions, apply as you think it appropriate.)*
- *Nos. indicate the pages and Nos. in the service manual for the base model.*
- *When ordering resistors, first convert resistance values into code form as shown in the following examples.*

Ex.1 When there are 2 effective digits (any digit apart from 0), such as 560 ohm and 47k ohm (tolerance is shown by J=5%, and K=10%).

560Ω → 56 x 10^1 → 561 ..... RD1/4PU[5][6][1]J
47kΩ → 47 x 10^3 → 473 ..... RD1/4PU[4][7][3]J
0.5Ω → R50 ..... RN2H[R][5][0]K
1Ω → 1R0 ..... RS1P[1][R][0]K

Ex.2 When there are 3 effective digits (such as in high precision metal film resistors).

5.62kΩ → 562 x 10^1 → 5621 ..... RN1/4PC[5][6][2][1]F

CONTRAST TABLE

VSX-321-K-P/SYXE8, VSX-322-K/SYXE8 and VSX-322-K/DLPWXE are constructed the same except for the following:

Mark	No.	Symbol and Description	VSX-321-K-P/SYXE8	VSX-322-K/SYXE8	VSX-322-K/DLPWXE	Remarks
		PCB ASSEMBLIES				
NSP		1..PCB TTL ASSY FRONT	7025HK1103011-IL	7025HK1123021-IL	7025HK1123031-IL	
	P58-4	2..HP Assy	7028071134010-IL	7028071134050-IL	7028071134050-IL	
NSP		1..PCB TTL ASSY D-MAIN	7025HK1103012-IL	7025HK1123022-IL	7025HK1123032-IL	
	P58-5	2..D-MAIN Assy	7028071161010-IL	7028071161040-IL	7028071161040-IL	
NSP		1..PCB TTL ASSY INPUT	7025HK1103013-IL	7025HK1123023-IL	7025HK1123033-IL	
	P58-6	2..DG Assy	7028071111010-IL	7028071113010-IL	7028071113010-IL	
	P58-7	2..INPUT Assy	7028071112010-IL	7028071114010-IL	7028071114010-IL	
NSP		1..PCB TTL ASSY AMP	7025HK1103014-IL	7025HK1123024-IL	7025HK1123034-IL	
	P58-8	2..AMP Assy	7028071141010-IL	7028071143010-IL	7028071143010-IL	
NSP		1..PCB TTL ASSY CNT	7025HK1103015-IL	7025HK1123025-IL	7025HK1123035-IL	
NSP		1..PCB TTL ASSY MAIN	7025HK1103040-IL	7025HK1123020-IL	7025HK1123030-IL	
	P58-10	2..MAIN Assy	7028071121040-IL	7028071121050-IL	7028071121060-IL	
	P58-11	2..STBY Assy	7028071122040-IL	7028071122040-IL	7028071122020-IL	
		PACKING SECTION				
⚠	P55-1	Power Cord	L068250160020-IL	L068250160020-IL	L068250160020-IL	
	P55-2	AM Loop Antenna	E601019000010-IL	E601019000010-IL	E601019000010-IL	
	P55-3	FM Wire Antenna	E605010140010-IL	E605010140010-IL	E605010140010-IL	
	P55-4	Remote Control (AXD7618)	8300761800010-IL	8300761800010-IL	8300761800010-IL	
	P55-12	Operating Instructions (CD-ROM)	6517000000440-IL	6517000000770-IL	6517000000790-IL	
	P55-13	Quick Start Guide	5707000006110-IL	5707000006850-IL	5707000006870-IL	
NSP	P55-20	Warranty Card	ARY7127	ARY7158	Not used	
	P55-22	Cushion, Snow	6230212914000-IL	6230212914000-IL	6230212914000-IL	
	P55-23	PE, Sheet	6327040059000-IL	6327040059000-IL	6327040059000-IL	
	P55-25	Box, Gift	6007211970030-IL	60072118201E0-IL	60072118201F0-IL	
		VSX-321-K-P SECTION				
	P58-30	Front Panel	3067215081140-IL	3067215081150-IL	3067215081150-IL	
	P58-31	Chassis Back	3207214056110-IL	3207214056200-IL	3207214056210-IL	
		Sheet	Not used	1210210772100-IL	1210210772100-IL	No. 62
		Screw Cover	Not used	4050211745100-IL	4050211745100-IL	No. 63

Notes : The numbers in the remarks column correspond to the numbers on the “EXPLODED VIEWS”.
For PCB ASSEMBLIES, Refer to "CONTRAST OF PCB ASSEMBLIES" and “3. SCHEMATIC DIAGRAM”.

EXPLODED VIEWS

PACKING SECTION

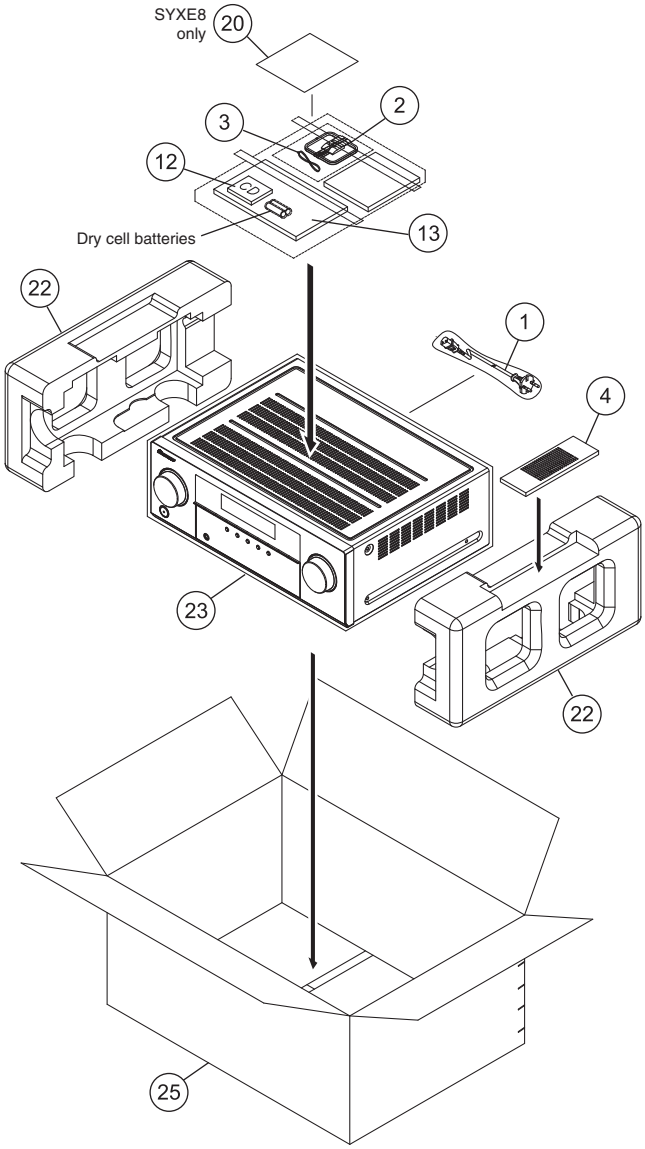

VSX-321-K-P SECTION

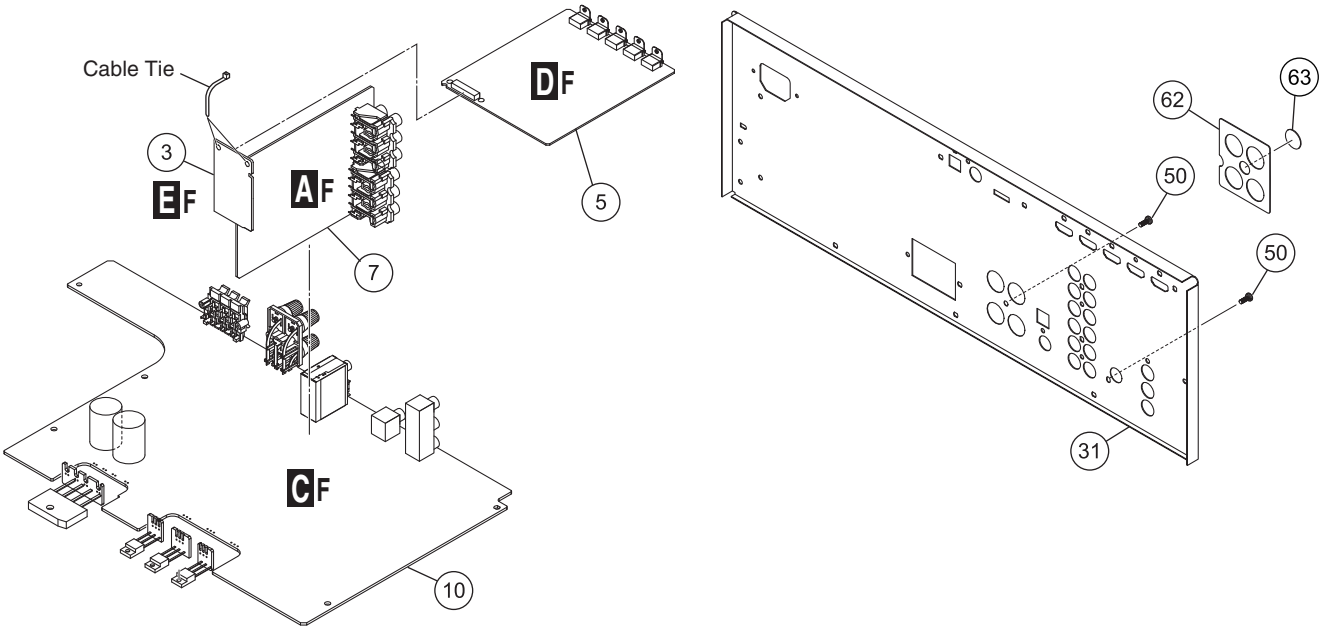

CONTRAST OF PCB ASSEMBLIES

A F INPUT ASSY

7028071112010-IL and 7028071114010-IL are constructed the same except for the following:

Mark	Symbol and Description	7028071112010-IL	7028071114010-IL	Remarks
	Q425, Q428	J544117Y01150-IL	Not used	
	Q429, Q430	Not used	J544049201210-IL	
	J400 CN,WIRE 2MM	L002201122620-IL	Not used	
	500 RING,TER WIRE	8410201010070-IL	Not used	

Note: For the above Assy's, apart from the registered parts for service described above, some nonregistered parts are also different.

B F AMP ASSY

7028071141010-IL and 7028071143010-IL are constructed the same except for the following:

Mark	Symbol and Description	7028071141010-IL	7028071143010-IL	Remarks
	D208	J5001268B0050-IL	Not used	
	Q203, Q207	J5023200B0050-IL	J5023206Y0050-IL	

Note: For the above Assy's, apart from the registered parts for service described above, some nonregistered parts are also different.

C F MAIN ASSY

7028071121040-IL, 7028071121050-IL and 7028071121060-IL are constructed the same except for the following:

Mark	Symbol and Description	7028071121040-IL	7028071121050-IL	7028071121060-IL	Remarks
	IC203	8952VS3210010-IL	8952VS3220010-IL	8952VS3220010-IL	
	Q602, Q603	Not used	J5222875B0010-IL	J5222875B0010-IL	
	JA1 TER,BOARD PUSH 4P	G594408SA030Y-IL	Not used	Not used	
	JA1 TER,BOARD SCREW 4P	Not used	G612405E0200Y-IL	G612405E0200Y-IL	
	JA2 TER,BOARD PUSH 8P	G598801SA050Y-IL	Not used	Not used	
	JA2 TER,BOARD PUSH 6P	Not used	G598801SA021Y-IL	G598801SA021Y-IL	
	JA4 TER,RCA 1PIN	Not used	G600107A0000Y-IL	G600107A0000Y-IL	
	601 TUNER,FM/AM	E903104100780-IL	E903104100780-IL	E903004100780-IL	
	R17, R18	C060010065050-IL	Not used	Not used	

Note: For the above Assy's, apart from the registered parts for service described above, some nonregistered parts are also different.

D F D-MAIN ASSY

7028071161010-IL and 7028071161040-IL are constructed the same except for the following:

Mark	Symbol and Description	7028071161010-IL	7028071161040-IL	Remarks
	IC201	8952VS3210020-IL	8952VS3220020-IL	

Note: For the above Assy's, apart from the registered parts for service described above, some nonregistered parts are also different.

F F HP ASSY

7028071134010-IL and 7028071134050-IL are constructed the same except for the following:

Mark	Symbol and Description	7028071134010-IL	7028071134050-IL	Remarks
	JA 701 JACK,D6.5	G402PJ612AG1Y-IL	G402PJ612A09Y-IL	

I F DG ASSY

Although 7028071111010-IL and 7028071113010-IL are different in part number and they are NOT COMPATIBLE, they consist of the same service components.

N F STBY ASSY

Although 7028071122040-IL and 7028071122020-IL are different in part number and they are NOT COMPATIBLE, they consist of the same service components.

2. DISASSEMBLY
2.1 D-MAIN ASSY

Unlike VSX-321-K(HTP-071), D-MAIN ASSY of VSX-322 is fixed by additional cable ties to BRIDGE ASSY.

Additional cable ties

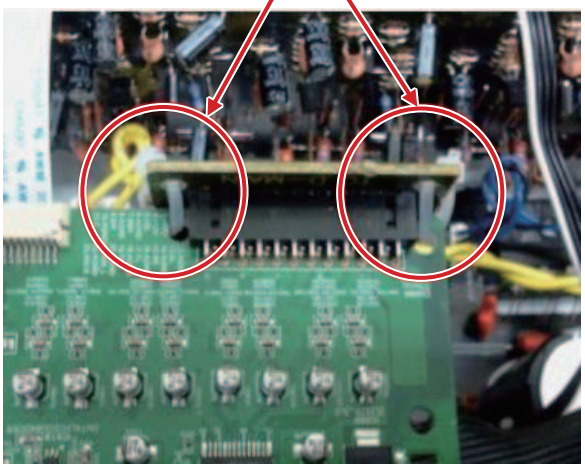

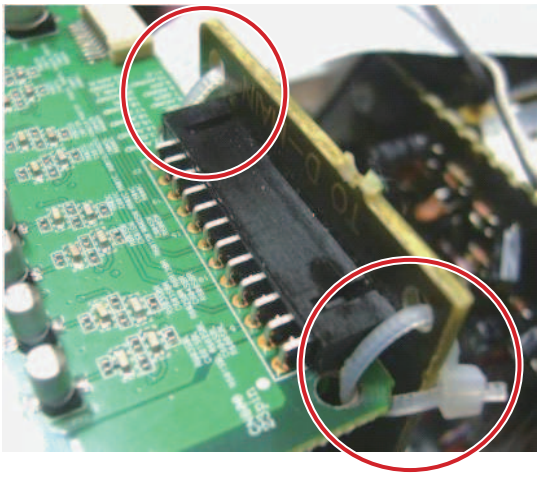

Therefore when replcing D-MAIN ASSY, cut the cable ties first, and then disconnect BRIDGE ASSY.

Note:
Some of D-MAIN ASSY of this model is fixed by hot melt to BRIDE ASSY and it is not removable.
Therefore if replacing that D-MAIN ASSY, order BRIDGE ASSY and replace it at the same time.
After replacing the D-MAIN ASSY and BRIDGE ASSY, fix them by cable ties like the above pictures.
(All of service parts of D-MAIN ASSY and BRIDGE ASSY have holes for fixing them by cable ties)

HOT MELT

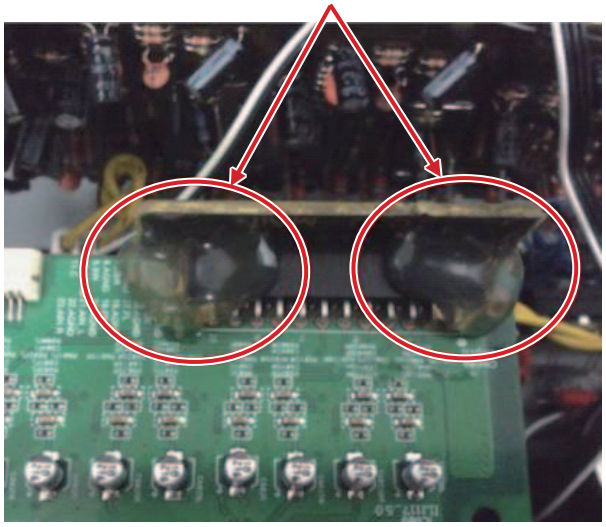

3. SCHEMATIC DIAGRAM
3.1 INPUT ASSY

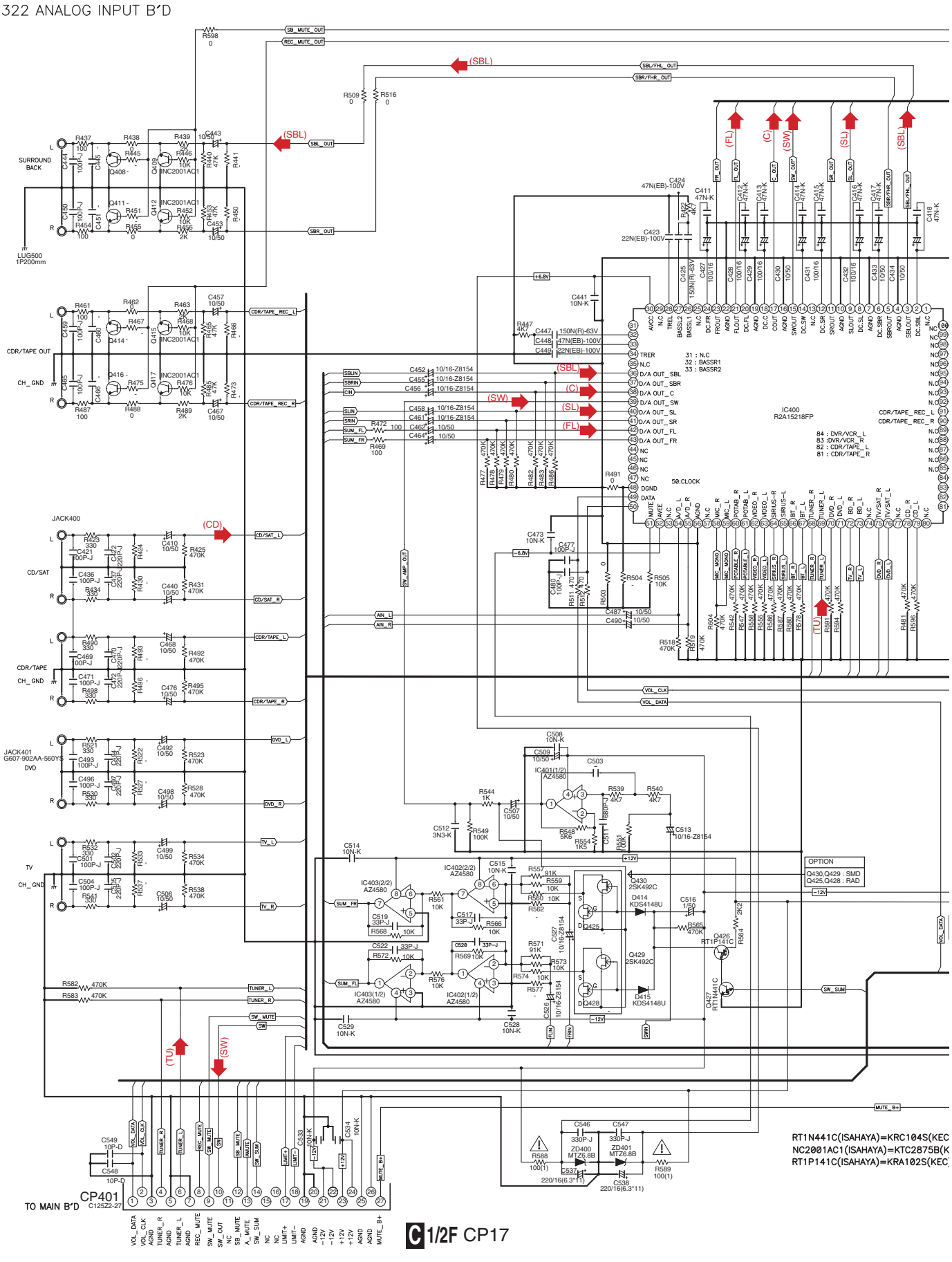

AF INPUT ASSY (7028071114010-IL)

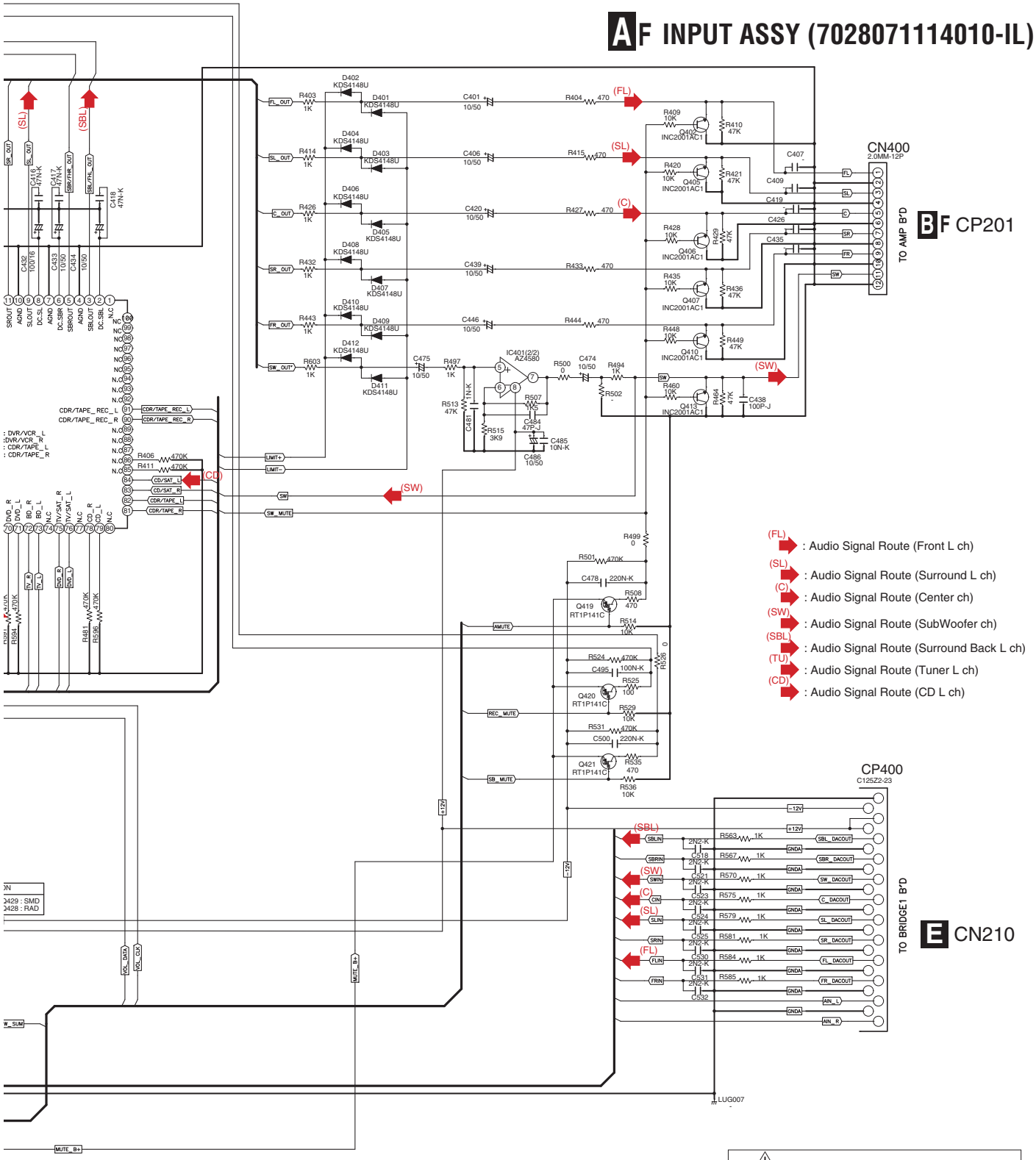

1C(ISAHAYA)=KRC104S(KEC)
AC1(ISAHAYA)=KTC2875B(KEC)
1C(ISAHAYA)=KRA102S(KEC)

The ⚠ mark found on some component parts indicates the importance of the safety factor of the part. Therefore when replacing be sure to use parts of identical designation

3.2 AMP ASSY

BF AMP ASSY (7028071143010-IL)

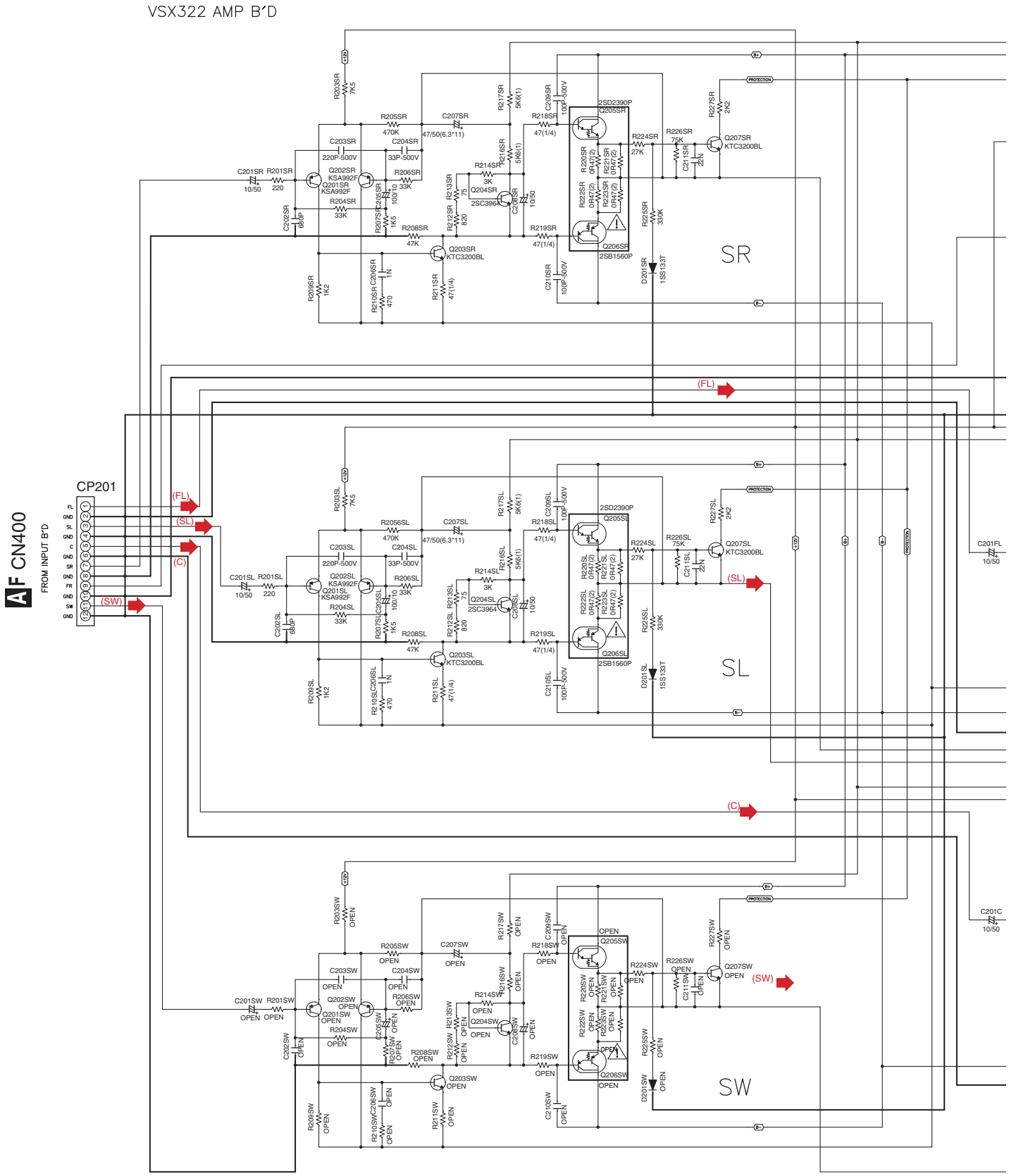

The ⚠ mark found on some component parts indicates the importance of the safety factor of the part. Therefore when replacing be sure to use parts of identical designation

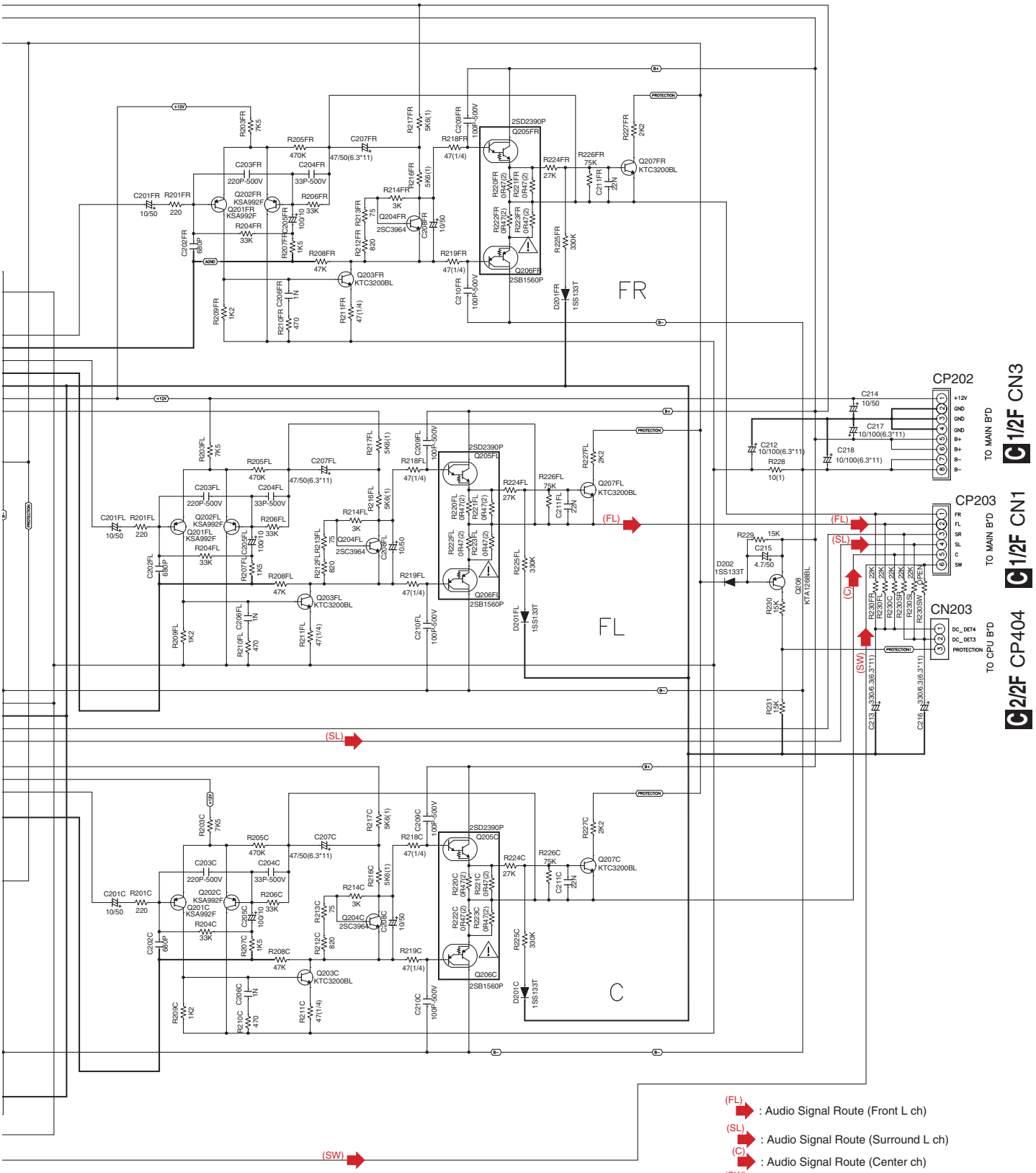

3.3 MAIN ASSY (1/2)

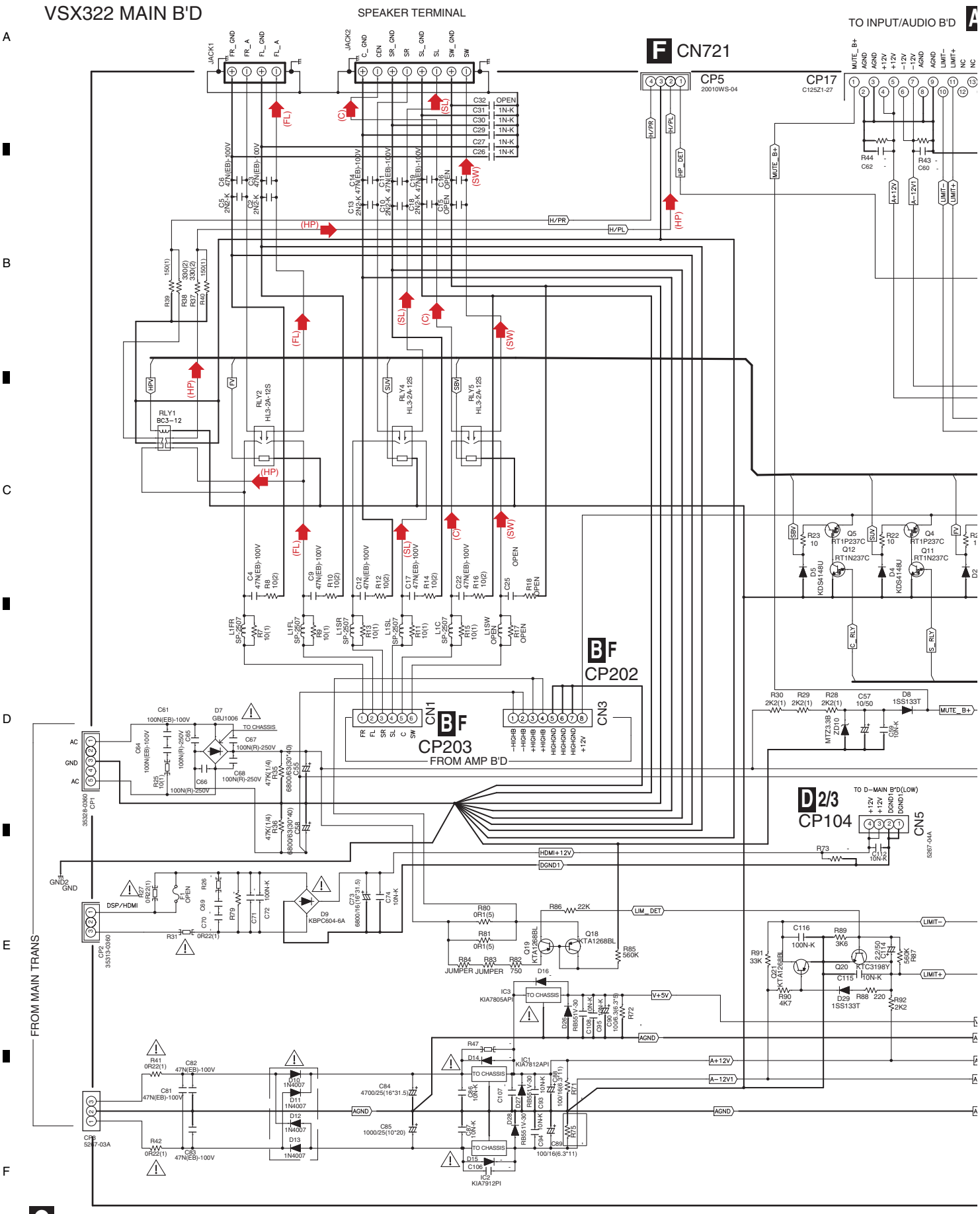

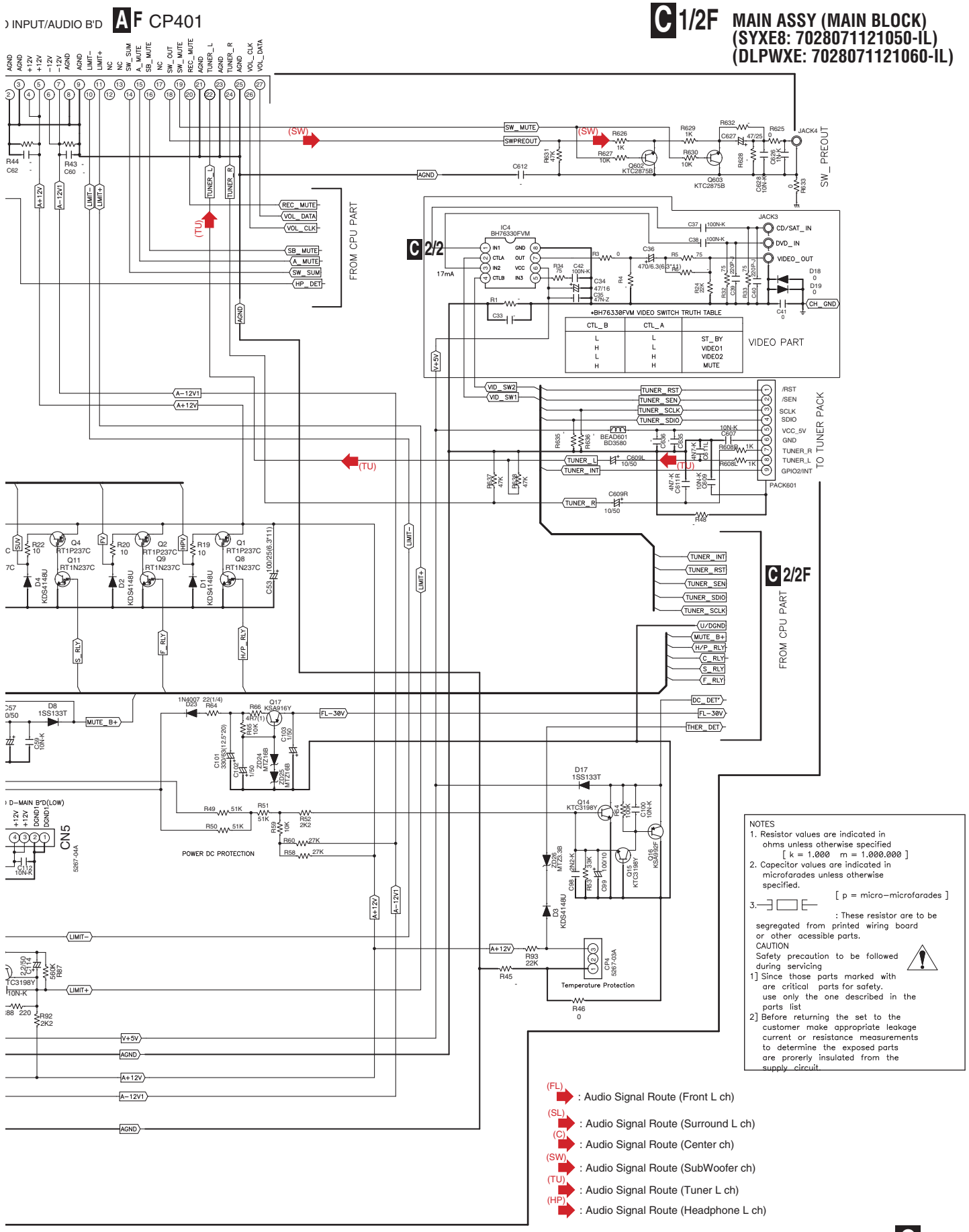
INPUT/AUDIO B'D
AF CP401
C 1/2F
MAIN ASSY (MAIN BLOCK)
(SYXE8: 7028071121050-IL)
(DLPWXE: 7028071121060-IL)
FROM CPU PART
C 2/2
VIDEO PART
*BH76330FVM VIDEO SWITCH TRUTH TABLE
CTL_B
CTL_A
ST_BY
VIDEO1
VIDEO2
MUTE
TO TUNER PACK
PACK601
C 2/2F
POWER DC PROTECTION
Temperature Protection
CN5
NOTES
1. Resistor values are indicated in ohms unless otherwise specified
[k = 1.000 m = 1.000.000]
2. Capacitor values are indicated in microfarades unless otherwise specified.
[p = micro-microfarades]
3. : These resistor are to be segregated from printed wiring board or other acessible parts.
CAUTION
Safety precaution to be followed during servicing
1] Since those parts marked with are critical parts for safety. use only the one described in the parts list
2] Before returning the set to the customer make appropriate leakage current or resistance measurements to determine the exposed parts are prorerly insulated from the supply circuit
(FL) : Audio Signal Route (Front L ch)
(SL) : Audio Signal Route (Surround L ch)
(C) : Audio Signal Route (Center ch)
(SW) : Audio Signal Route (SubWoofer ch)
(TU) : Audio Signal Route (Tuner L ch)
(HP) : Audio Signal Route (Headphone L ch)

C 1/2 F

3.4 MAIN ASSY (2/2)

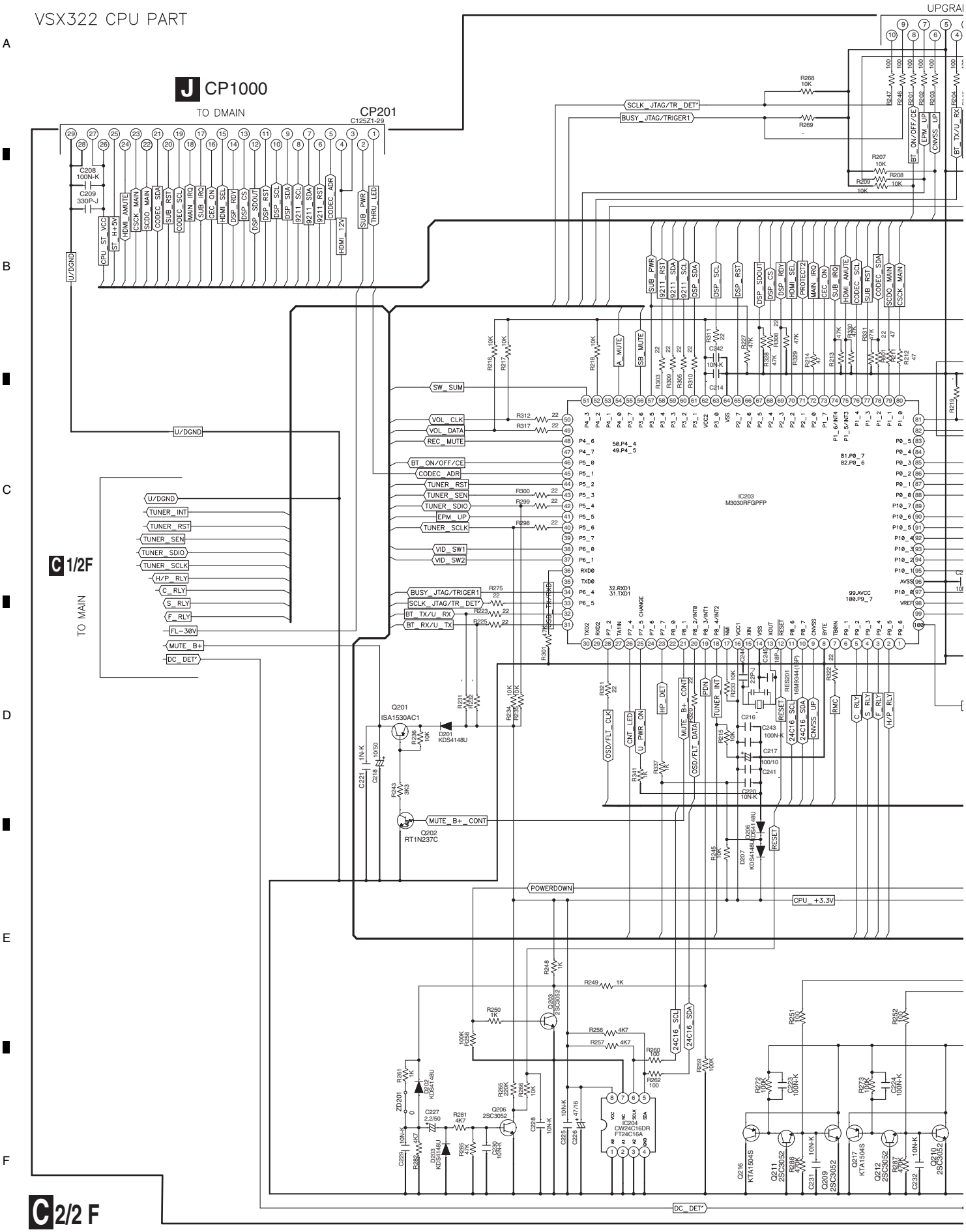

C 2/2F MAIN ASSY (MAIN BLOCK) (SYXE8: 7028071121050-IL) (DLPWXE: 7028071121060-IL)

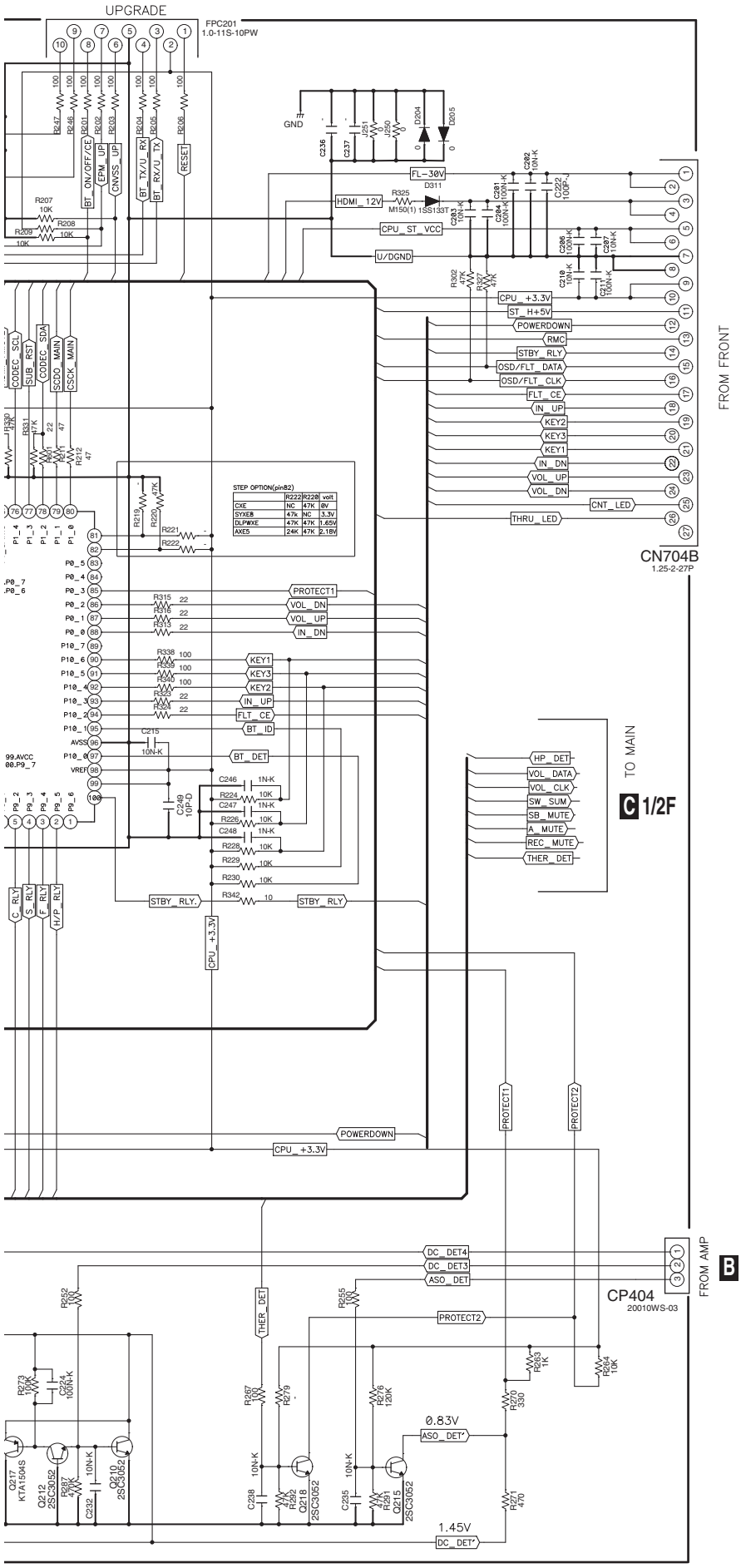

STEP OPTION(pin82)	R222	R220	volt
CXE	NC	47K	0V
SYXE8	47k	NC	3.3V
DLPWXE	47K	47K	1.65V
AXE5	24K	47K	2.18V

REGION OPTION JUMPER

	JQ1	JQ2	JQ2	JQ2
SYXE8(EU)	JUMPER	OPEN	OPEN	OPEN
CUX(USA)	OPEN	JUMPER	OPEN	OPEN
AXE5(CHINA)	OPEN	OPEN	JUMPER	OPEN
DLPWXE(GEN)	OPEN	OPEN	OPEN	JUMPER

CAUTION
FOR CONTINUED PROTECTION AGAINST RISK OF FIRE.
REPLACE WITH SAME TYPE AND RATINGS OF FUSE.

The ⚠ mark found on some component parts indicates the importance of the safety factor of the part. Therefore when replacing be sure to use parts of identical designation

C 2/2 F