# PRIMARE

## PRE32

## Service Manual

# 1. Schematics and Pcb.

**Confidential !**
This document is not allowed to show for third part without written permission
from Primare Systems AB.
This document is subject to change without notice.

**Author:**
Primare AB

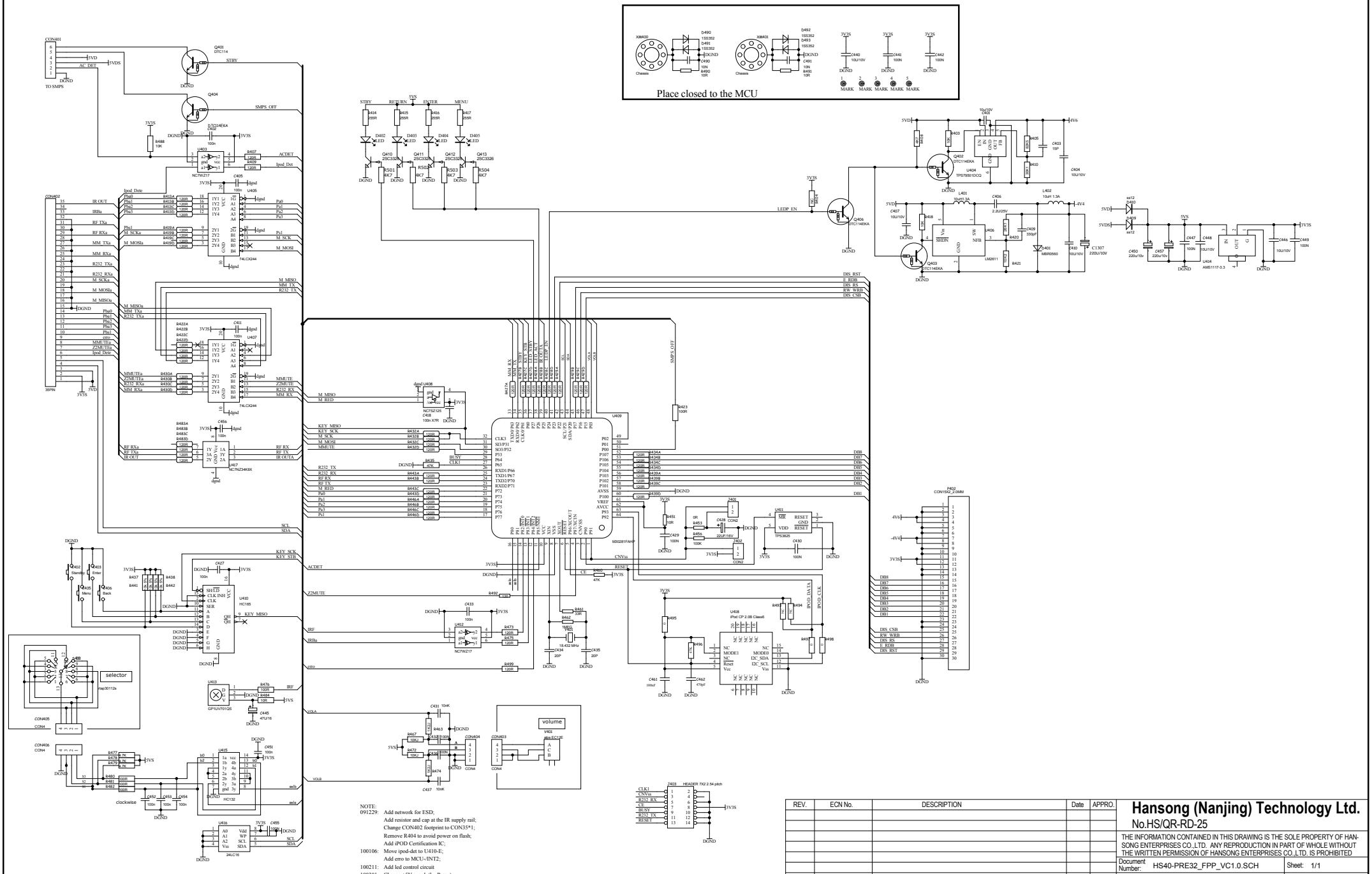


NOTE:
091229: Add network for ESD;
Add resistor and cap at the IR supply rail;
Change CON402 footprint to CON35*1;
Remove R404 to avoid power on flash;
Add iPOD Certification IC;
100106: Move ipod-det to U410-E;
Add erro to MCU=/INT2;
100211: Add led control circuit
100301: Change +5V supply(by Percy)
100302: 5VDS-FROM SMPS
5VD-LINEAR SUPPLY ON MAINBOARD
100331: Change R490 R491 from 100ohms to 10ohms

| REV. | ECN No. | DESCRIPTION | Date | APPRO. |
|---|---|---|---|---|
| | | | | |

**Hansong (Nanjing) Technology Ltd.**

No.HS/QR-RD-25

THE INFORMATION CONTAINED IN THIS DRAWING IS THE SOLE PROPERTY OF HANSONG ENTERPRISES CO.,LTD. ANY REPRODUCTION IN PART OF WHOLE WITHOUT THE WRITTEN PERMISSION OF HANSONG ENTERPRISES CO.,LTD. IS PROHIBITED

| | | |
|---|---|---|
| Document Number: HS40-PRE32_FPP_VC1.0.SCH | | Sheet: 1/1 |
| Project: | | State: |
| Drafted by: | PL Checked by: | Approved by: |
| Date: | Date: | Date: |

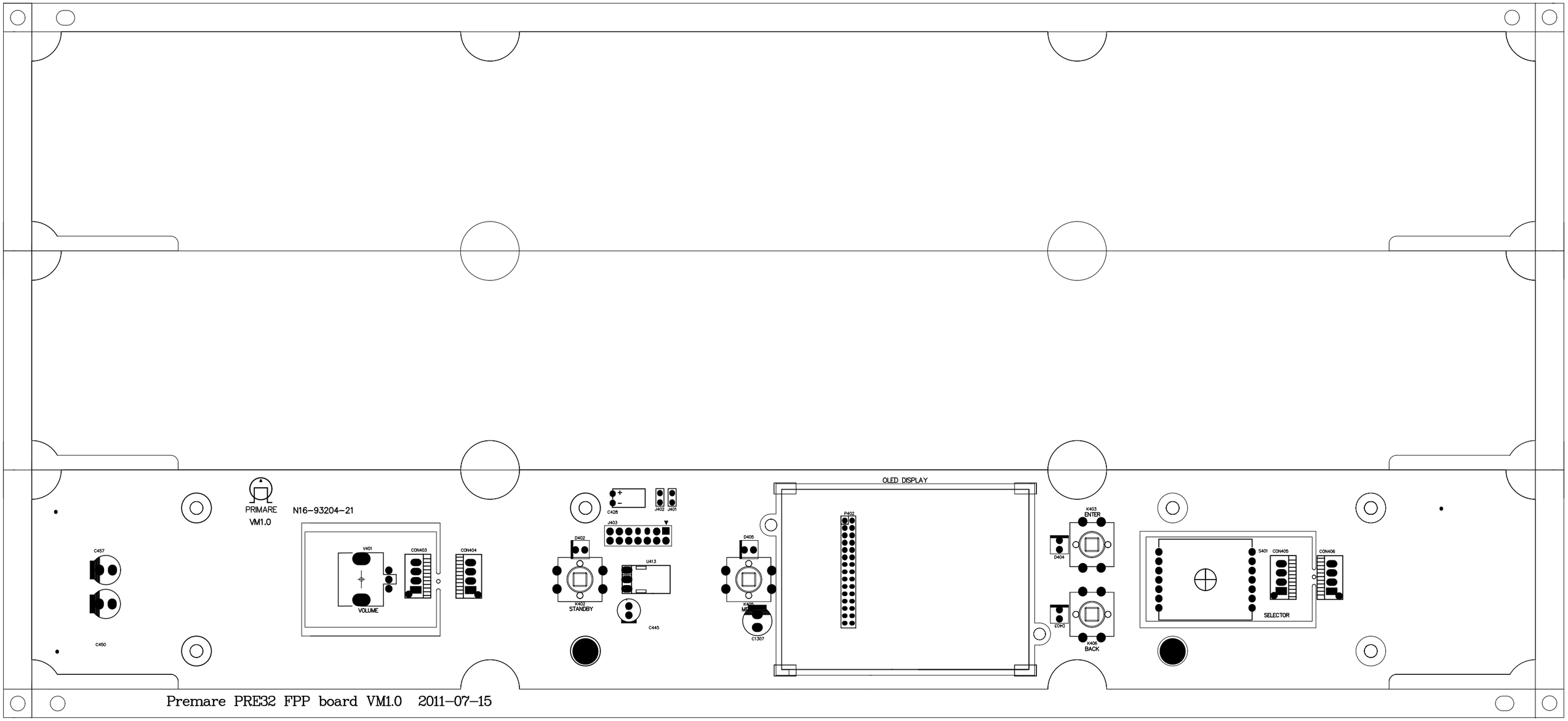


Premare PRE32 FPP board VM1.0 2011-07-15

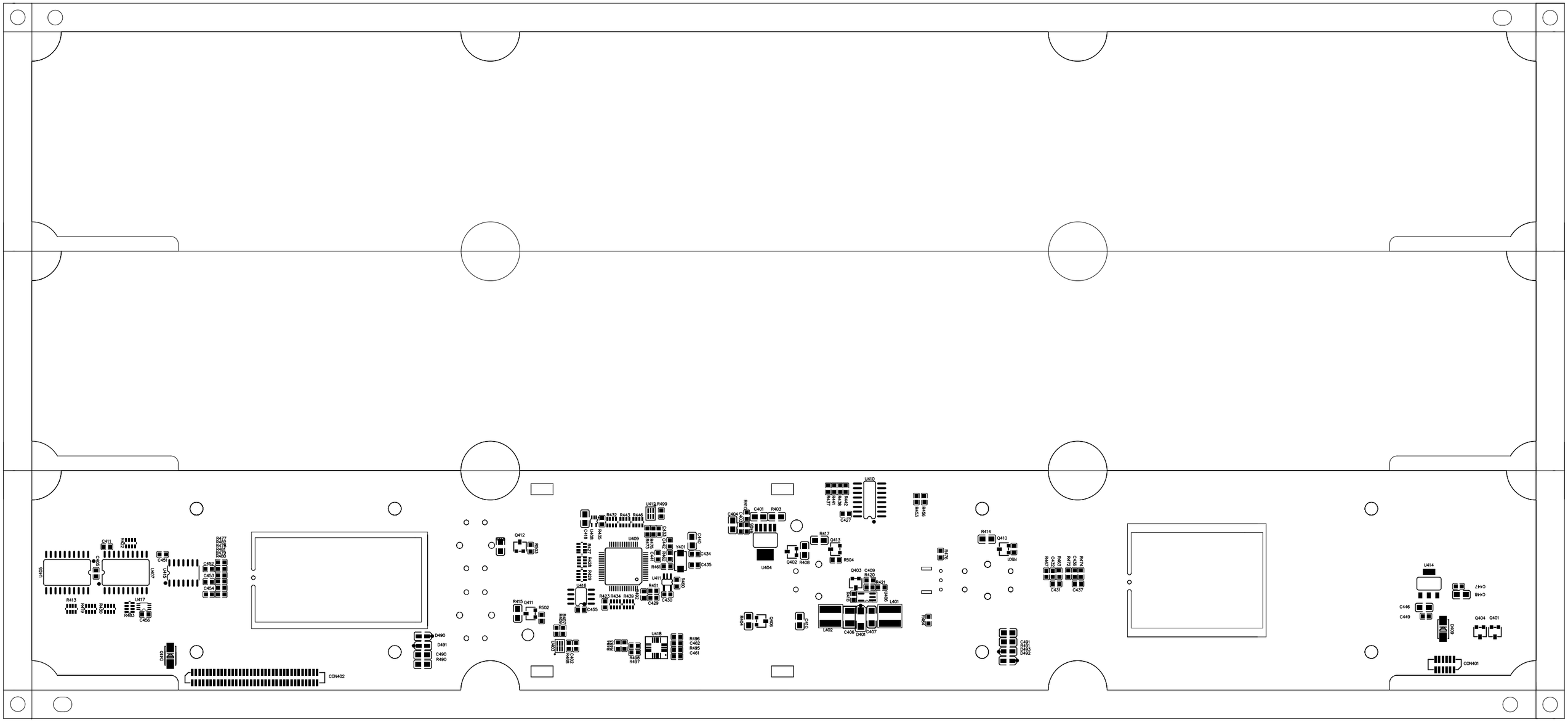
U405
C411
R412
C450
U407
C451
R477
R482
R483
R484
R485
R480
C452
C453
C454
R413
R414
R409
U417
R481
C456
D410
CON402
D490
D491
C490
R490
Q412
R503
R415
Q411
R502
R508
R507
C503
R506
R498
R435
R443
R446
U412
R499
R419
R436
R437
R438
R439
R440
R441
R442
C433
C432
C431
C430
C429
U409
R427
R428
R429
R430
R431
R432
R433
R444
R445
R447
R448
R449
R450
R451
R452
R453
R454
R455
R456
R457
R458
R459
R460
R461
R462
R463
R464
R465
R466
R467
R468
R469
R470
R471
R472
R473
R474
R475
R476
C440
C434
C435
Y401
U411
R491
R460
C430
C429
U416
C455
R423
R434
R439
R424
R425
R426
R427
R428
R429
R430
R431
R432
R433
R434
R435
R436
R437
R438
R439
R440
R441
R442
R443
R444
R445
R446
R447
R448
R449
R450
R451
R452
R453
R454
R455
R456
R457
R458
R459
R460
R461
R462
R463
R464
R465
R466
R467
R468
R469
R470
R471
R472
R473
R474
R475
R476
R477
R478
R479
R480
R481
R482
R483
R484
R485
R486
R487
R488
R489
R490
R491
R492
R493
R494
R495
R496
R497
R498
R499
R500
R501
R502
R503
R504
R505
R506
R507
R508
U418
R496
C462
R493
C461
R495
R497
C404
R405
Q402
R417
Q413
R504
U404
C401
R403
C404
R405
U410
R442
R441
R440
R439
R438
R437
C427
R453
R456
R452
R454
R414
Q410
R501
Q403
C409
R420
R421
R419
U406
L401
L402
C406
D401
C407
C405
C410
R407
R408
R409
R410
R411
R412
R413
R414
R415
R416
R417
R418
R419
R420
R421
R422
R423
R424
R425
R426
R427
R428
R429
R430
R431
R432
R433
R434
R435
R436
R437
R438
R439
R440
R441
R442
R443
R444
R445
R446
R447
R448
R449
R450
R451
R452
R453
R454
R455
R456
R457
R458
R459
R460
R461
R462
R463
R464
R465
R466
R467
R468
R469
R470
R471
R472
R473
R474
R475
R476
R477
R478
R479
R480
R481
R482
R483
R484
R485
R486
R487
R488
R489
R490
R491
R492
R493
R494
R495
R496
R497
R498
R499
R500
R501
R502
R503
R504
R505
R506
R507
R508
C431
C437
U414
C447
C448
C446
C449
D409
Q404
Q401
CON401

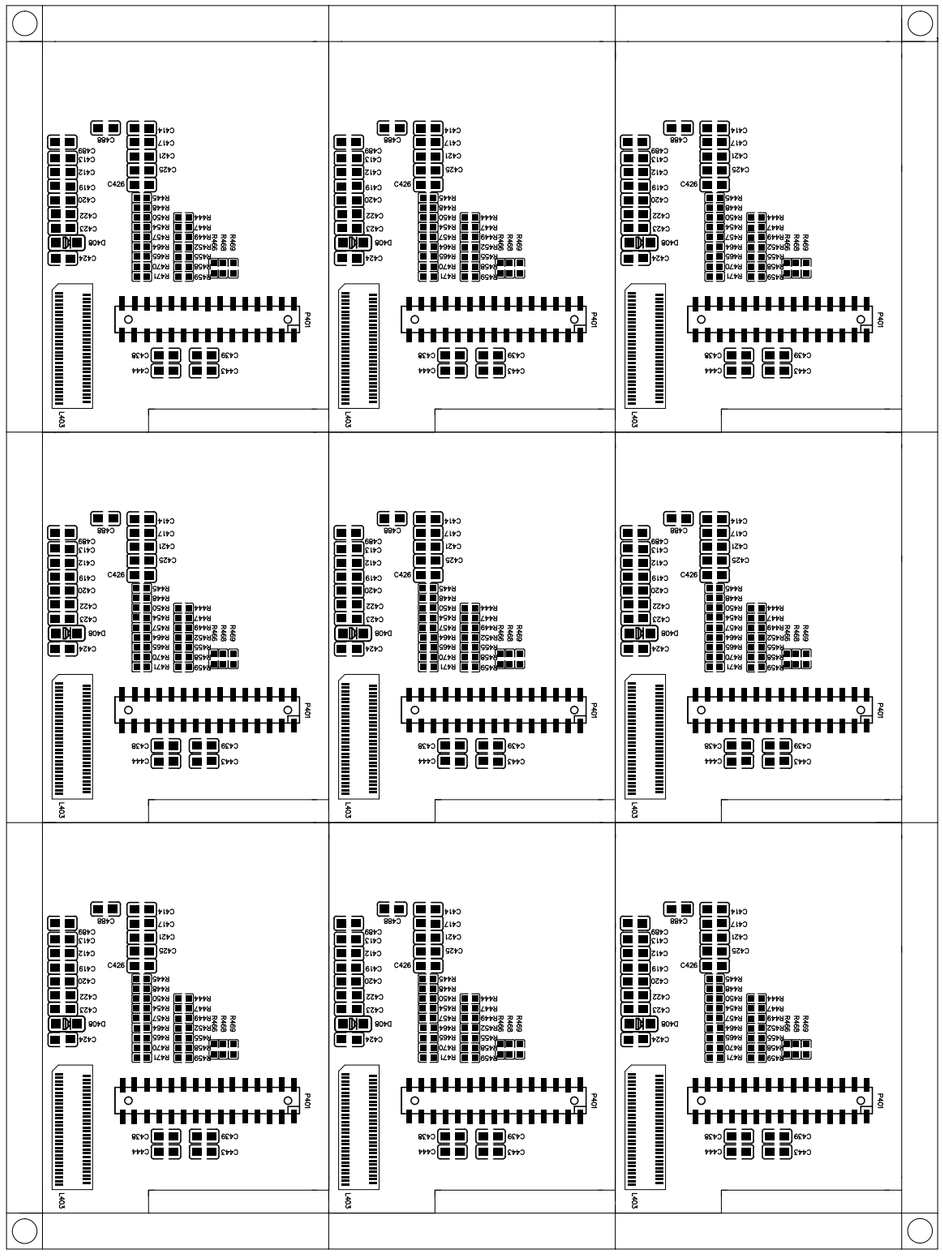

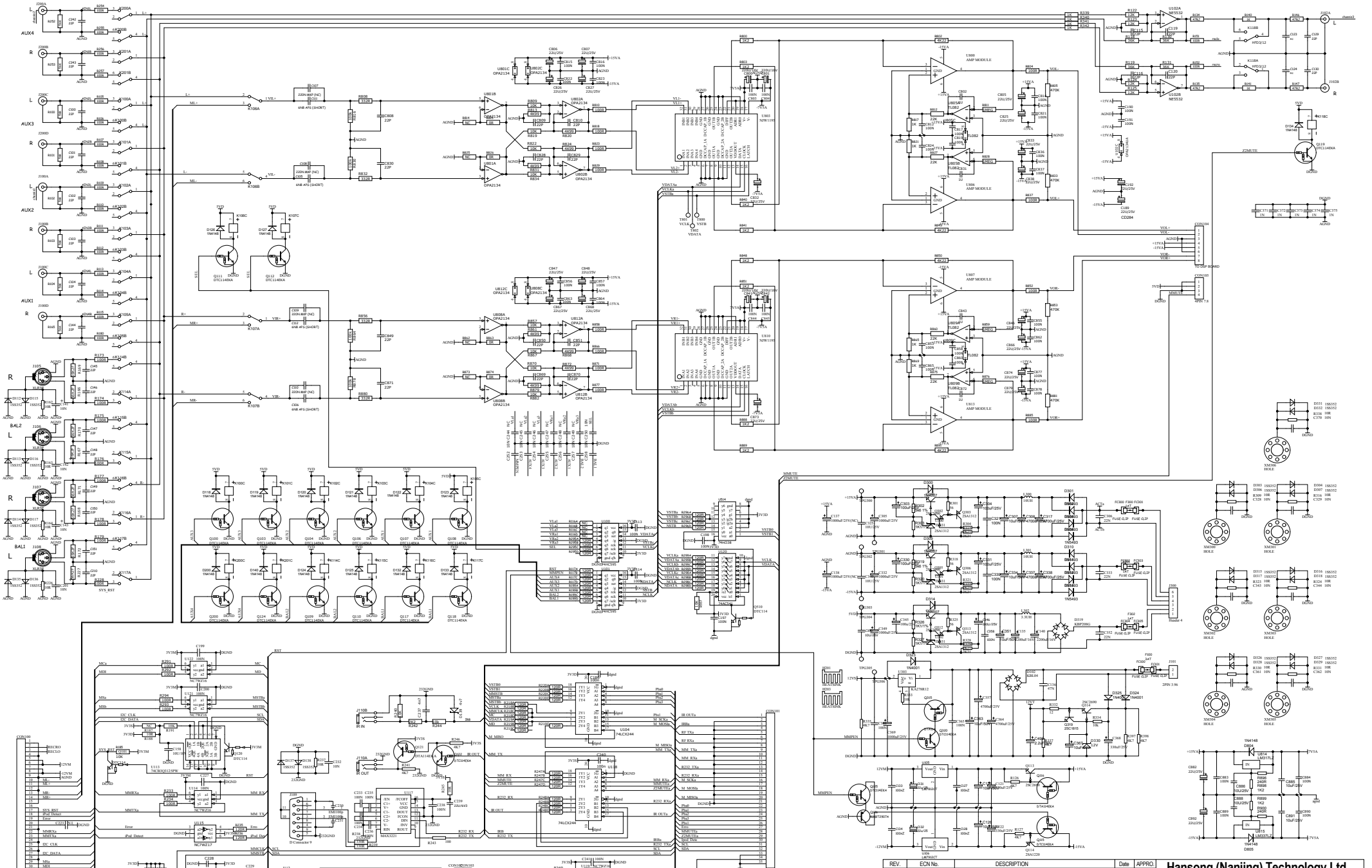

| REV. | ECN No. | DESCRIPTION | Date | APPRO. |
|---|---|---|---|---|
| | | | | |

**Hansong (Nanjing) Technology Ltd.**

No.HS/QR-RD-25

THE INFORMATION CONTAINED IN THIS DRAWING IS THE SOLE PROPERTY OF HANSONG ENTERPRISES CO.,LTD. ANY REPRODUCTION IN PART OF WHOLE WITHOUT THE WRITTEN PERMISSION OF HANSONG ENTERPRISES CO.,LTD. IS PROHIBITED

| | | | |
|---|---|---|---|
| Document Number: | HS40-PRE32 VP1.SCH | Sheet: | 1/1 |
| Project: | PRE32 | State: | VP |
| Drafted by: | | PL Checked by: | Approved by: |
| Date: | | Date: | Date: |

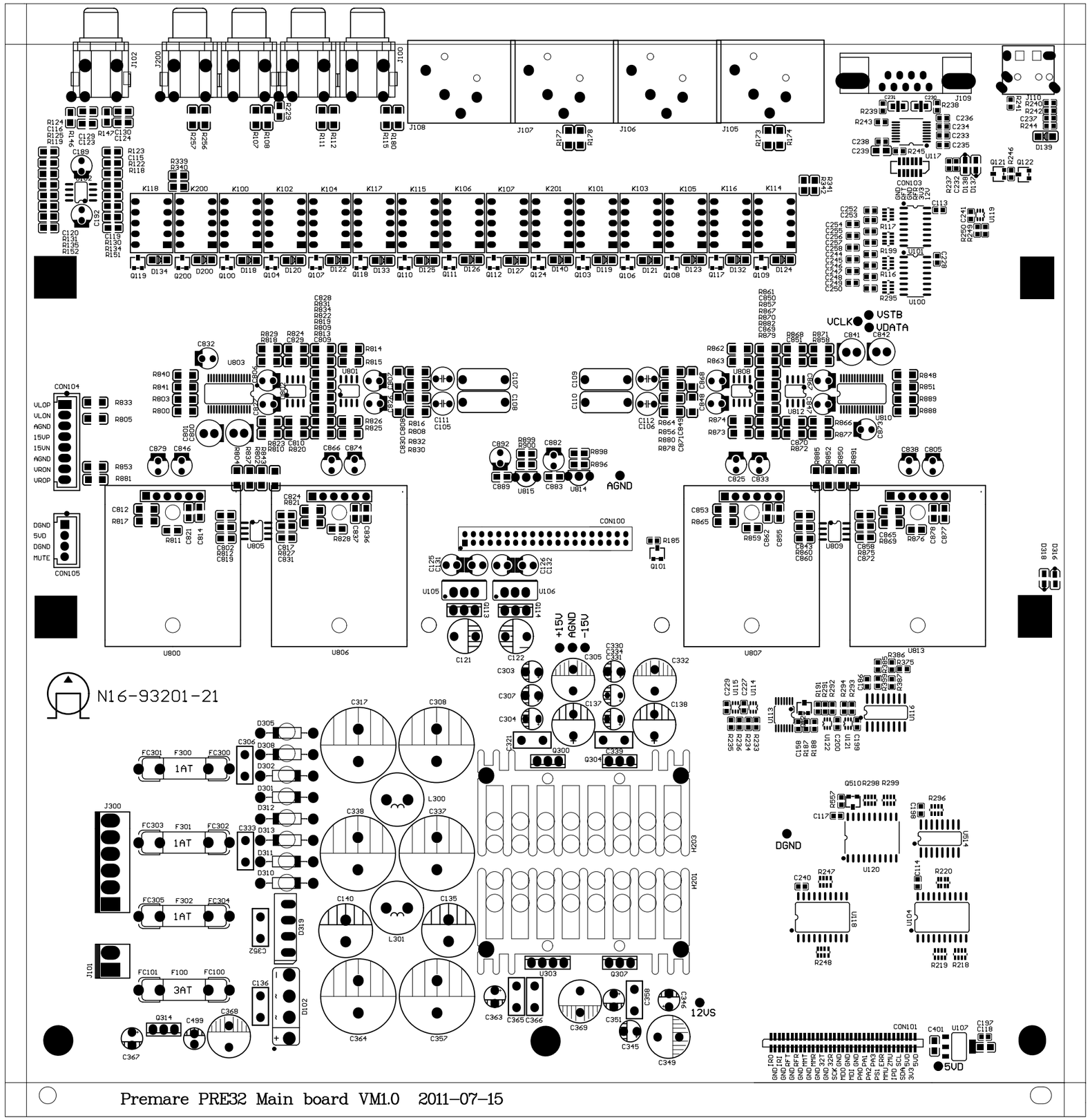


Premare PRE32 Main board VM1.0 2011-07-15

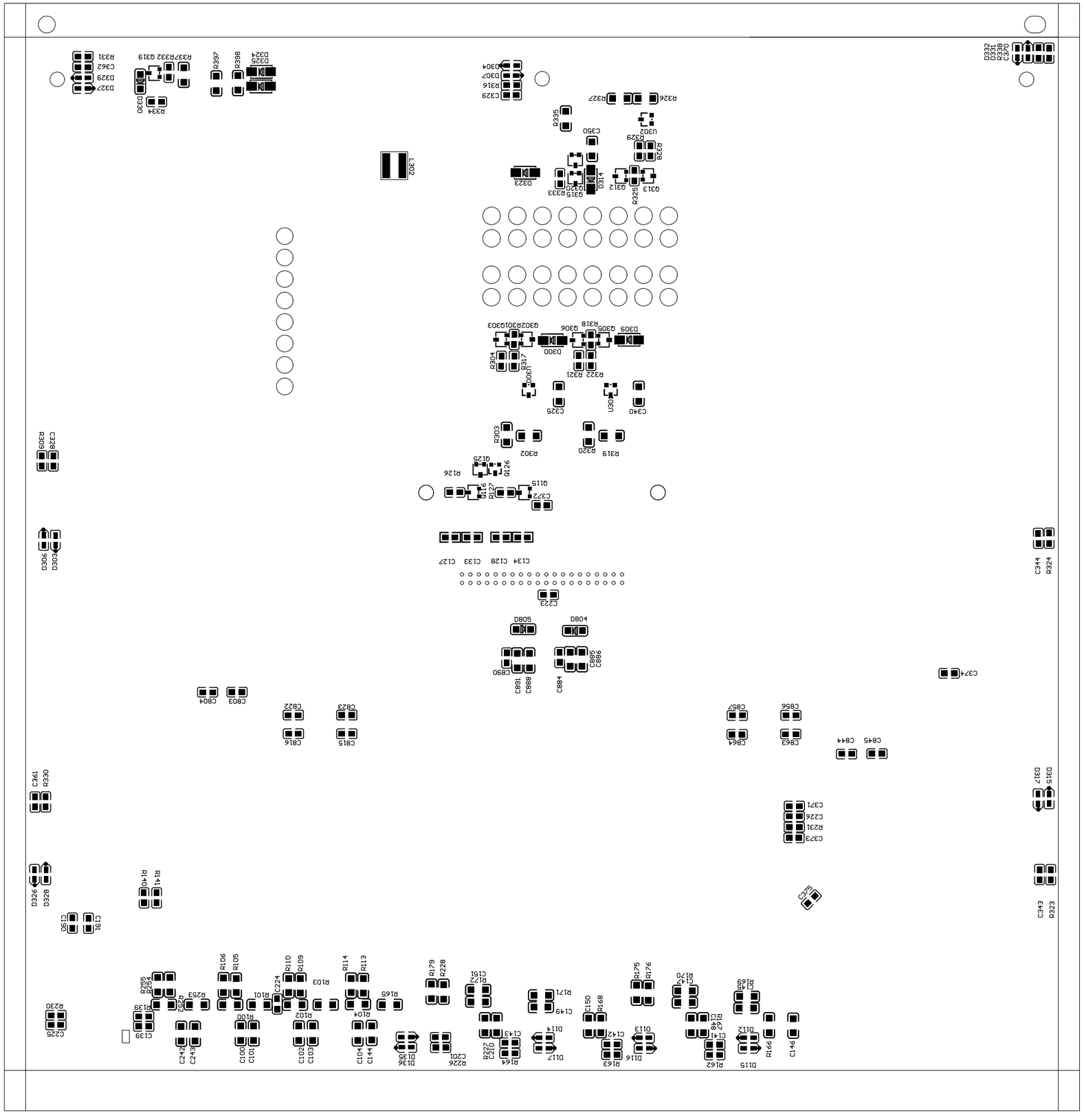

C146
R166
D115
D112
R162
C141
R167
R168
C145
R169
C147
R170
D116
D113
R163
C142
R168
C150
R176
R175
D117
D114
C149
R171
R164
C143
R227
C210
R172
C151
R226
C201
R228
R179
D136
D138
C144
C104
R104
R165
R113
R114
C103
C102
R102
R103
R109
R110
C224
C101
C100
R100
R101
R105
R106
C243
C242
R253
R252
C139
R139
R255
R254
C225
R230
D191
D190
R141
R140
D328
D326
R323
C343
C375
C373
R231
C226
C371
D315
D317
R330
C361
C845
C844
C863
C864
C856
C857
C815
C816
C823
C822
C803
C804
C374
C884
C885
C886
C888
C891
C890
D804
D805
C223
C134
C128
C133
C127
R324
C344
D303
D306
C372
Q115
R127
Q116
R126
Q126
Q125
R319
R320
R302
R303
R328
R309
C340
U301
C325
U300
R322
R321
R317
R304
D309
Q305
R318
Q306
D300
Q302
R301
Q303
Q313
R325
Q312
D314
Q315
Q320
R333
D323
L302
R328
R329
U302
C350
R335
R326
R327
C329
R316
D307
D304
R334
D330
D327
D329
C362
R331
D325
D324
R398
R397
R337
R332
Q319
D332
D331
R339
C370

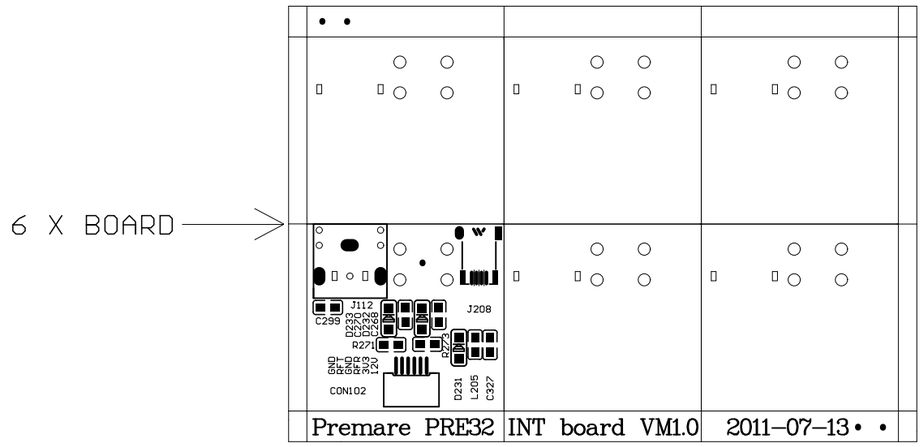
6 X BOARD
J112
C299
D233
C270
C232
C268
R271
GND
GND
GND
RXR
RXT
12V
CON102
J208
R273
D231
L205
C327
Premare PRE32
INT board VM1.0
2011-07-13

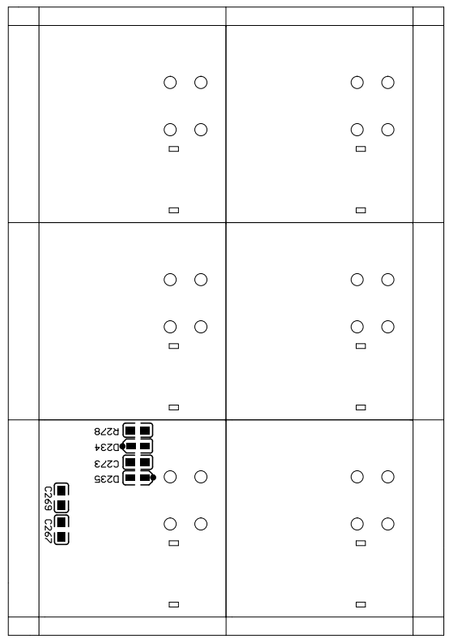
C269
C267
D235
C273
D234
R278

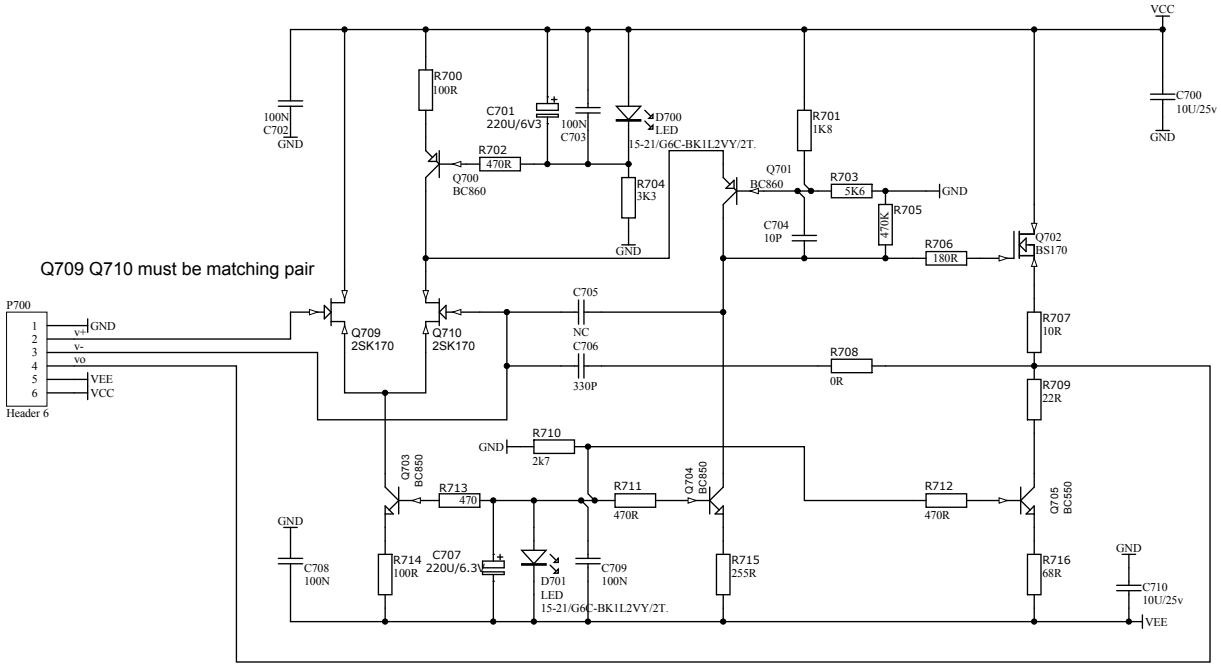

| REV. | ECN No. | DESCRIPTION | Date | APPRO. |
|---|---|---|---|---|
| | | | | |
| | | | | |
| | | | | |
| | | | | |
| | | | | |
| | | | | |
| | | | | |
| | | | | |
| | | | | |

# Hansong (Nanjing) Technology Ltd.

No.HS/QR-RD-25

THE INFORMATION CONTAINED IN THIS DRAWING IS THE SOLE PROPERTY OF HANSONG ENTERPRISES CO.,LTD. ANY REPRODUCTION IN PART OF WHOLE WITHOUT THE WRITTEN PERMISSION OF HANSONG ENTERPRISES CO.,LTD. IS PROHIBITED

| | | |
|---|---|---|
| Document Number: HS40-I32_FPP VC1-0.SCH | | Sheet: 1/1 |
| Project: | | State: |
| Drafted by: | PL Checked by: | Approved by: |
| Date: | Date: | Date: |

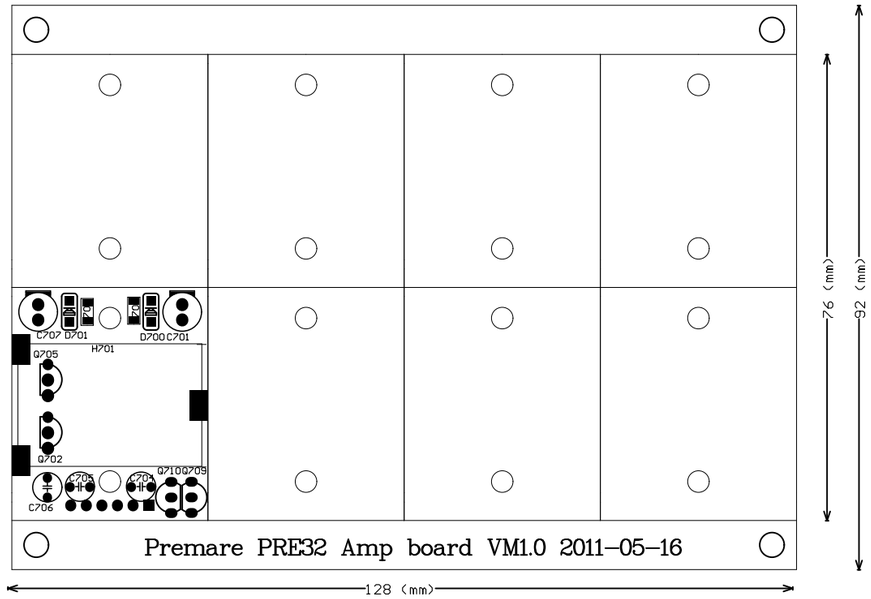
C707 D701
R7
R6
D700 C701
H701
Q705
Q702
C706
Q708
Q710 Q709
Premare PRE32 Amp board VM1.0 2011-05-16
128 (mm)
76 (mm)
92 (mm)

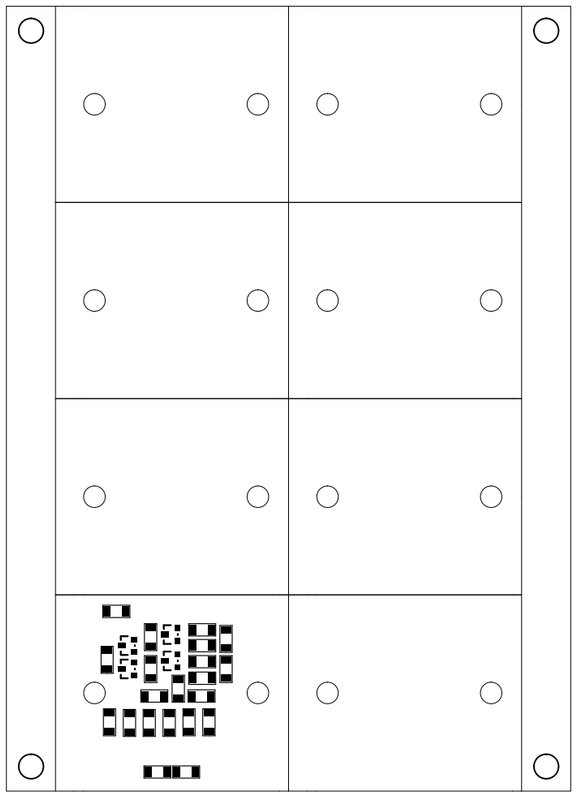

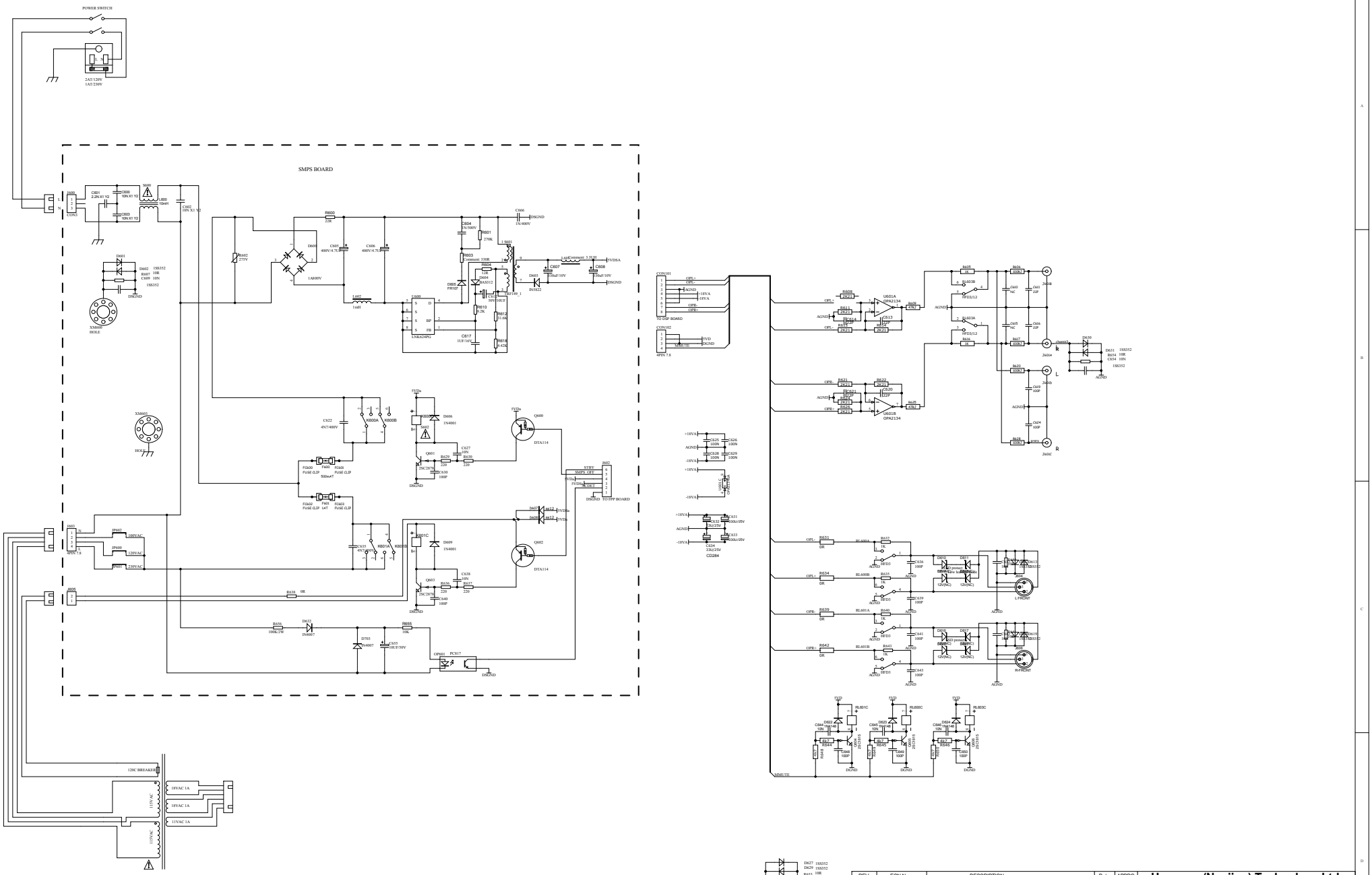


| REV. | ECN No. | DESCRIPTION | Date | APPRO. |
|---|---|---|---|---|
| | | | | |

**Hansong (Nanjing) Technology Ltd.**

No.HS/QR-RD-25

THE INFORMATION CONTAINED IN THIS DRAWING IS THE SOLE PROPERTY OF HANSONG ENTERPRISES CO.,LTD.. ANY REPRODUCTION IN PART OF WHOLE WITHOUT THE WRITTEN PERMISSION OF HANSONG ENTERPRISES CO.,LTD. IS PROHIBITED

| | | | |
|---|---|---|---|
| Document Number: | HS40-PRE32_PSU&OUT VC1-0.SCH | | Sheet: 1/1 |
| Project: | PRE32 | | State: VC |
| Drafted by: | | PL Checked by: | Approved by: |
| Date: | | Date: | Date: |

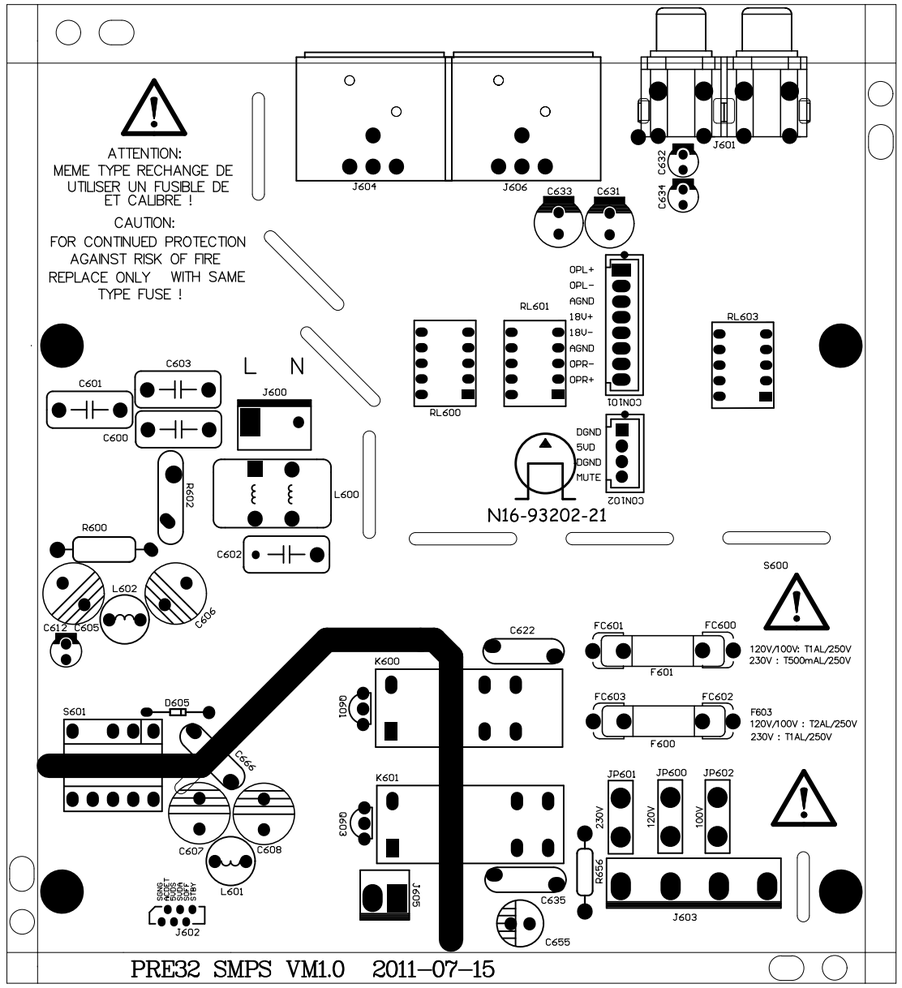
ATTENTION:
MEME TYPE RECHANGE DE
UTILISER UN FUSIBLE DE
ET CALIBRE !
CAUTION:
FOR CONTINUED PROTECTION
AGAINST RISK OF FIRE
REPLACE ONLY WITH SAME
TYPE FUSE !
J604
J606
J601
C632
C634
C633
C631
OPL+
OPL-
AGND
18V+
18V-
AGND
OPR-
OPR+
CON101
RL601
RL603
RL600
DGND
5VD
DGND
MUTE
CON102
N16-93202-21
L N
C603
C601
C600
J600
R602
L600
R600
C602
L602
C612
L605
C606
S600
C622
FC601
FC600
F601
120V/100V: T1AL/250V
230V : T500mAL/250V
FC603
FC602
F603
120V/100V : T2AL/250V
230V : T1AL/250V
F600
K600
D601
S601
D605
C646
K601
D603
C607
C608
L601
J605
J602
C635
C655
R656
JP601
JP600
JP602
230V
120V
100V
J603
PRE32 SMPS VM1.0 2011-07-15

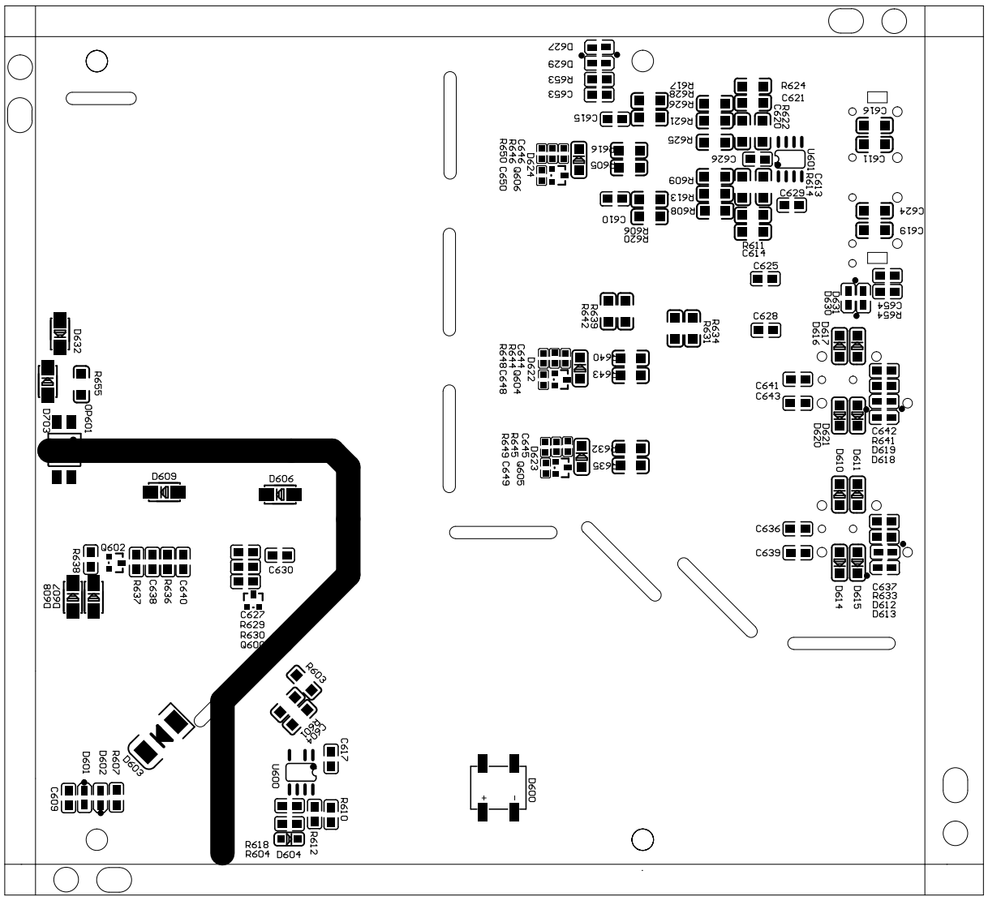
D627
D629
R653
C653
C615
R624
C621
R622
C622
R626
R629
R617
R625
R621
C616
C611
C626
U601
R614
C613
C623
R609
R613
R608
C610
R606
R620
C624
C619
R611
C614
C625
R654
C654
D631
D630
R639
R612
R631
R634
C629
D612
D616
C641
C643
D640
R643
D622
C644
R604
R648
C648
C642
R641
D619
D618
D621
D620
D632
R655
OP601
D701
D610
D611
D609
D606
C636
C639
C632
R633
D612
D613
D614
D615
R638
D608
D607
C640
R636
C638
R637
C630
C627
R629
R630
D609
D602
D601
R607
C608
C609
R608
C607
U600
R610
R612
D604
R618
R604
D600