PROTON AP-1000 SERVICE MANUAL

STEREO PREAMPLIFIER

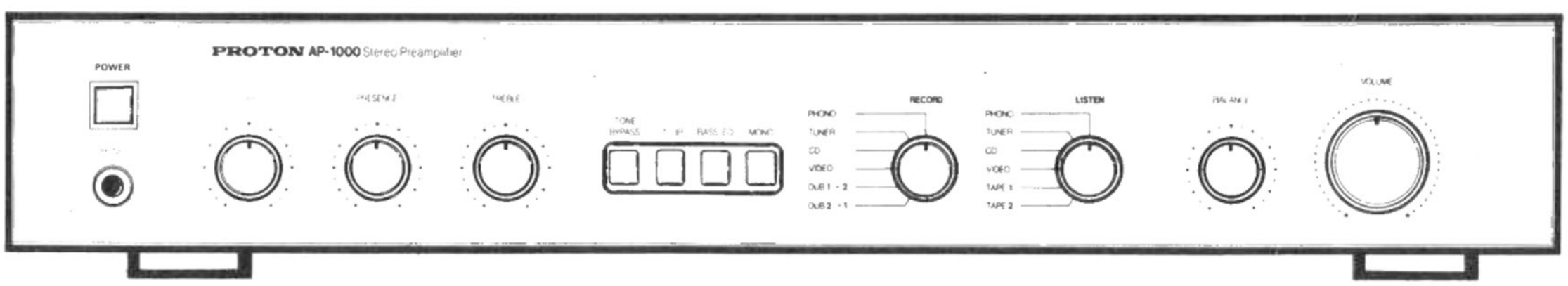

www.hifiengine.com

CONTENTS

ADJUSTMENT.....1
SPECIFICATION.....1
BLOCK DIAGRAM.....2
CIRCUIT DIAGRAM.....3
PCB PARTS LOCATION (TOP VIEW).....4
PCB PARTS LOCATION (BOTTOM VIEW).....5
PCB PARTS LOCATION (TOP VIEW).....6
PCB PARTS LOCATION (BOTTOM VIEW).....7
WIRING DIAGRAM.....8
ELECTRICAL PARTS LIST.....9
MECHANICAL PARTS LIST.....14
ASSEMBLY DIAGRAM.....15
HANDLE ASSEMBLY DIAGRAM.....16
PACKING DIAGRAM.....17

www.hifiengine.com

ADJUSTMENT

SELECT LISTEN FUNCTION TO HIGH LEVEL INPUT (TUNER OR VIDEO,.....ETC), THEN FEED 1KHz SIGNAL WITH 150mV/rms LEVEL INTO THE RESPECTIVE INPUT. ADJUST VR401 (L-CH) AND VR402(R-CH) TO GET 1V/rms OUTPUT AT PRE-OUT.

SPECIFICATION

MAXIMUM OUTPUT LEVEL (20Hz-20KHz) AT THD 0.1%	
PRE-OUT:	21V /-
SUBWOOFER OUT/HI-PASS OUT:	14V/14V
T.H.D. 20Hz-20KHz 2 VOLT OUTPUT:	0.003%
I.M.D. 2 VOLT OUTPUT:	0.003%
FREQUENCY RESPONSE 20-20KHz:	+-0.2dB
HIGH LEVEL INPUT RSISTANCE/CAPACITANCE:	26K OHM/47pF
LINE INPUT SENSITIVITY (VIDEO):	150mV
(TAPE PLAY):	150mV
(PHONO MM):	2.5mV
(PHONO MC HIGH/LOW):	0.2mV/0.1mV
RESIDUAL NOISE (FLAT):	0.02mV
CHANNEL CROSSTALK (1 KHz):	93dB
FUNCTION CROSSTALK (1 KHz):	78dB
S/N RATIO (A-WEIGHTED) (VIDEO):	103dB
(TAPE PLAY):	103dB
(PHONO MM):	91dB
(PHONO MC):	70dB
BASS CONTROL @ 100Hz (BOOST/CUT):	+-10dB/-10dB
TREBLE CONTROL @ 10KHz (BOOST/CUT):	+-10dB/-10dB
BASS EQ @ 75Hz:	+3dB
INFRASONIC FILTER (10Hz):	-4dB
PHONO INPUT RESISTANCE (MM/MC):	47K OHM/100 OHM
PHONO INPUT CAPACITANCE (SELECTABLE):	100pF/200pF/320pF
PHONO OVERLOAD @ 1 KHz T.H.D. 0.1% (MM):	250mV
PHONO T.H.D. AT 4.5V OUTPUT (MM):	0.006%
PHONO T.H.D. AT 4.5V OUTPUT (MC):	0.015%
RIAA RESPONSE ACCURACY MM/MC:	+-0.2dB/+-0.3dB
PRESENCE CONTROL @ 1K:	+10dB/-10dB
SUBWOOFER OUT @ 75Hz:	-3dB
SUBWOOFER OUT @ 150Hz:	-3dB
HI-PASS OUT @ 75Hz:	-0.5dB
HI-PASS OUT @ 150Hz:	-0.5dB
DIMENSIONS WxHxD (INCH):	16.53"x3"x14.2"
DIMENSIONS WxHxD (MM):	420x76x360 MM
NET WEIGHT:	6.5Kg/14.3Lbs
SHIPPING WEIGHT:	7.8Kg/17.16Lbs

www.hifiengine.com

BLOCK DIAGRAM

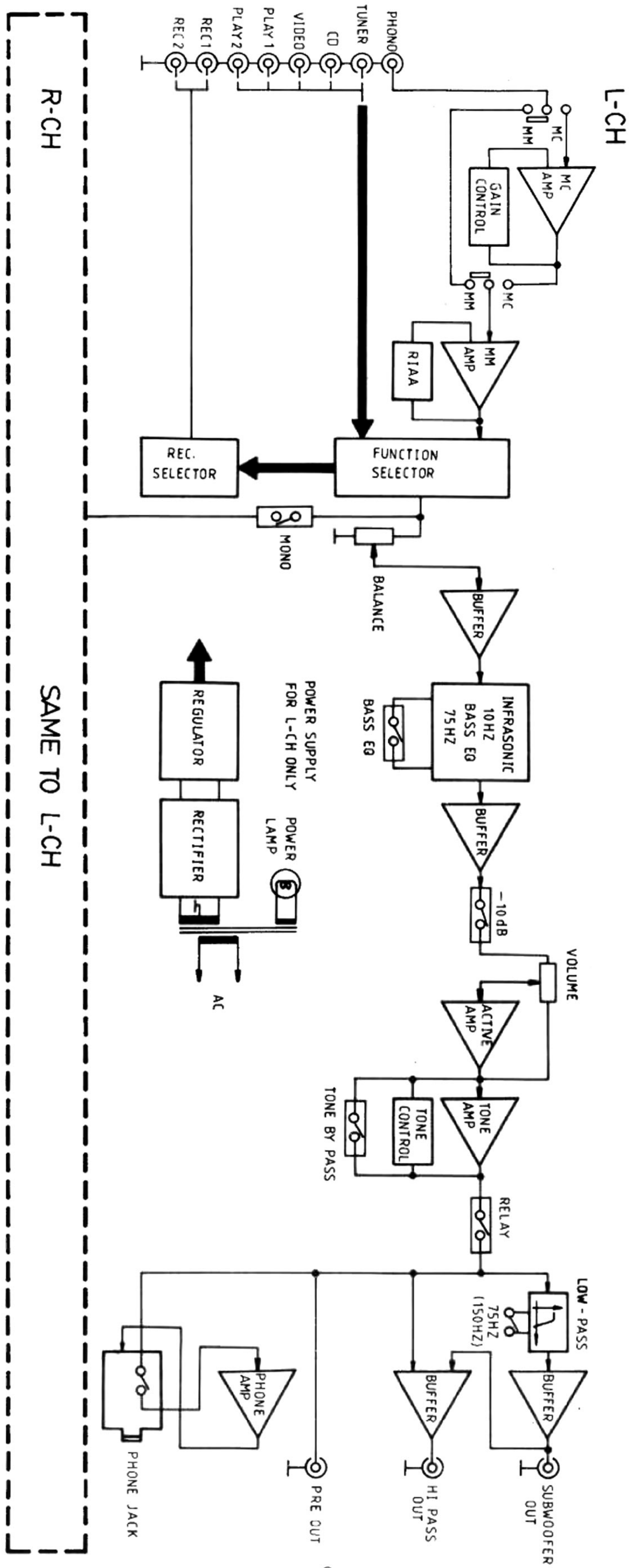

CIRCUIT DIAGRAM

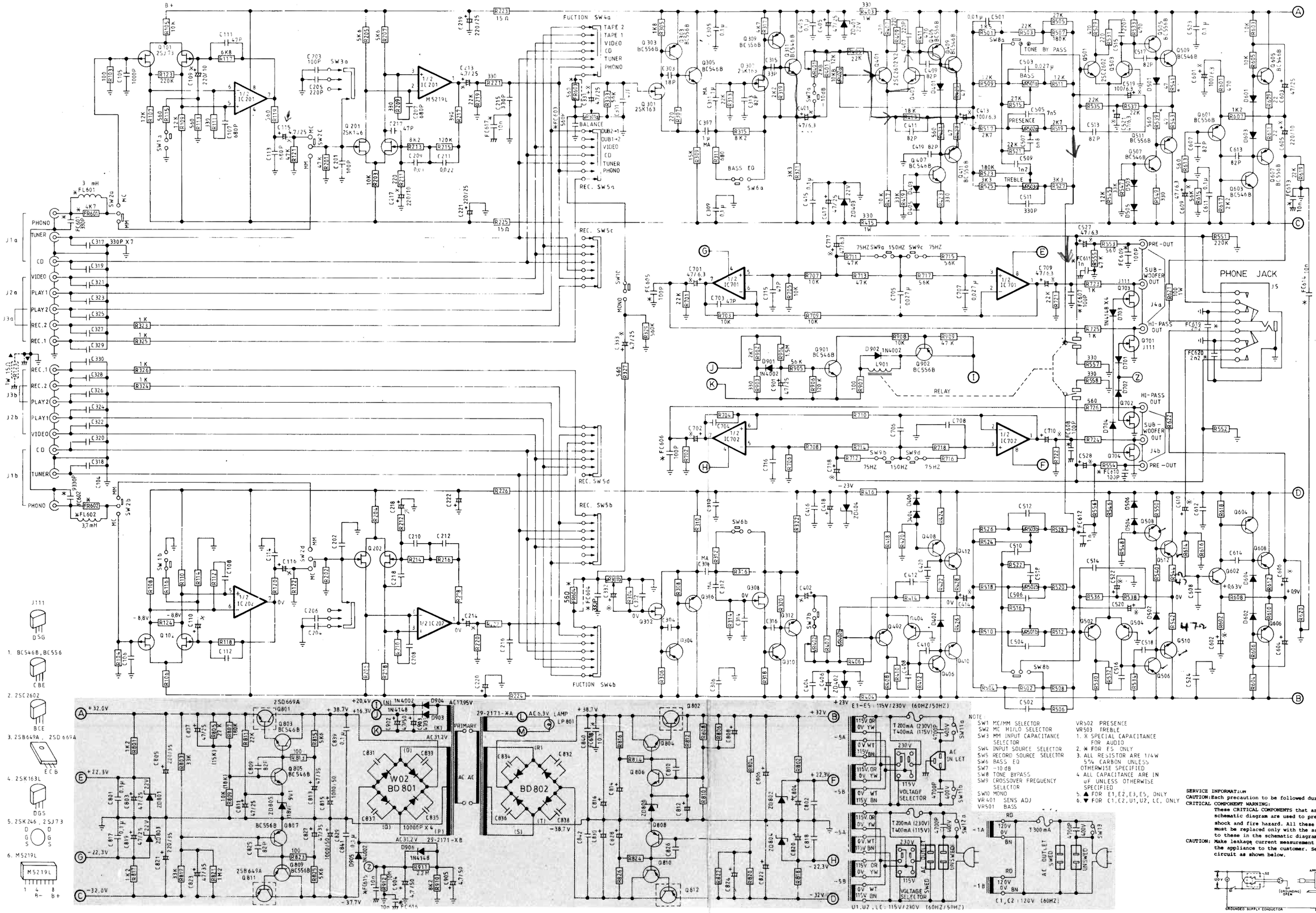

PCB PARTS LOCATION (TOP VIEW)

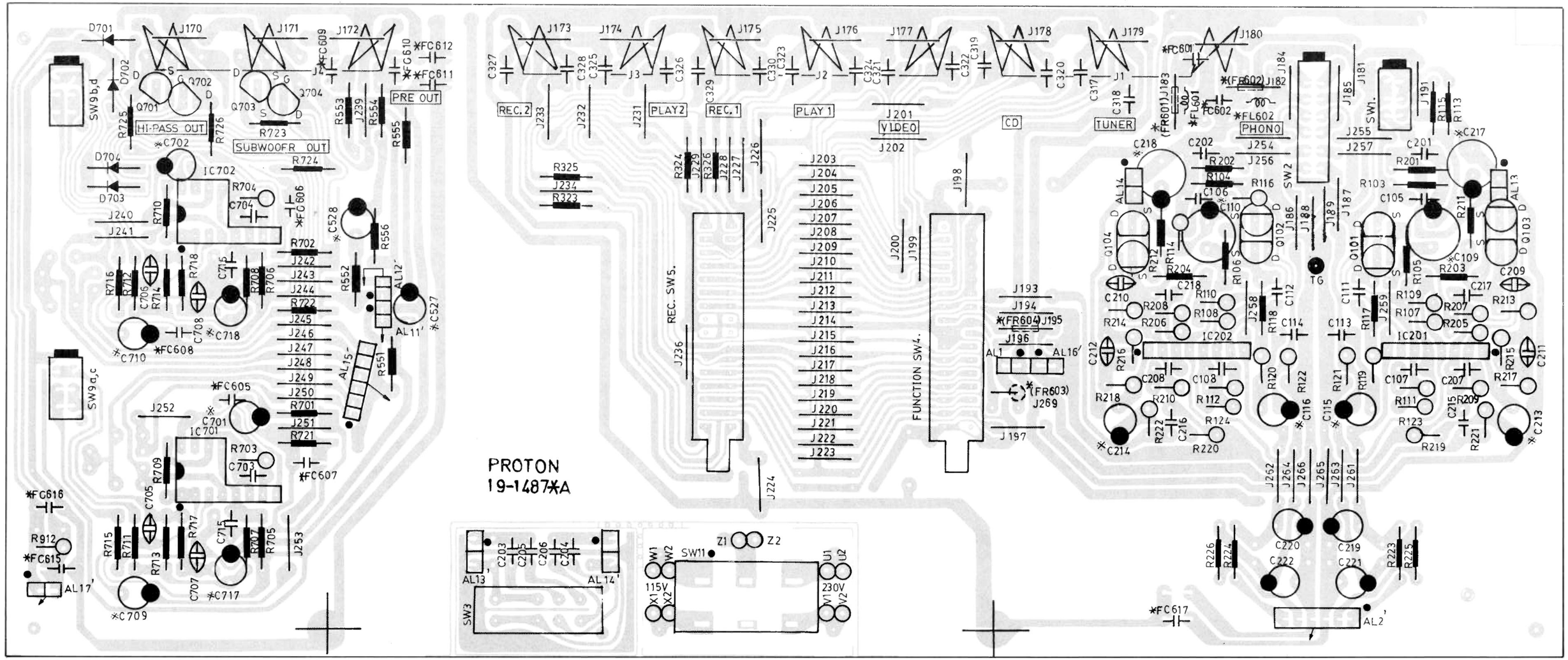

PCB PARTS LOCATION (BOTTOM VIEW)

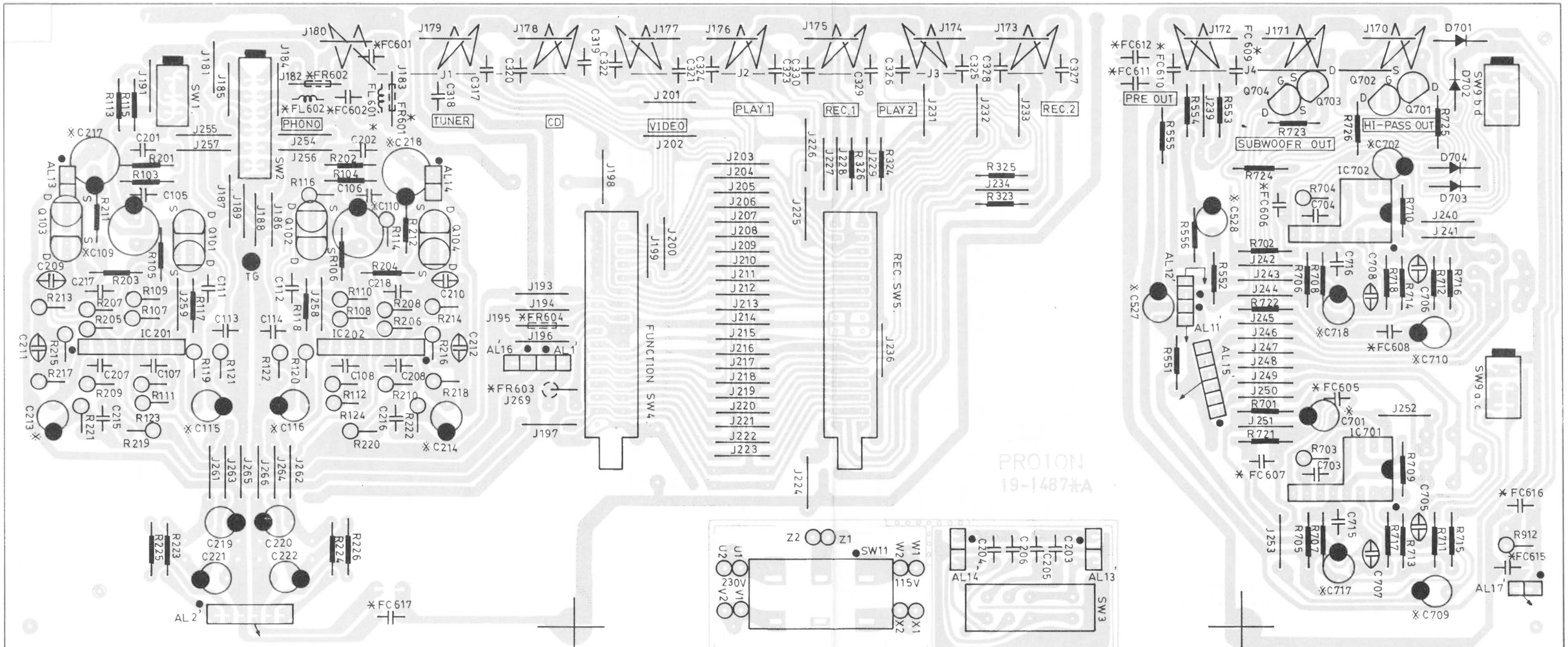

PCB PARTS LOCATION (TOP VIEW)

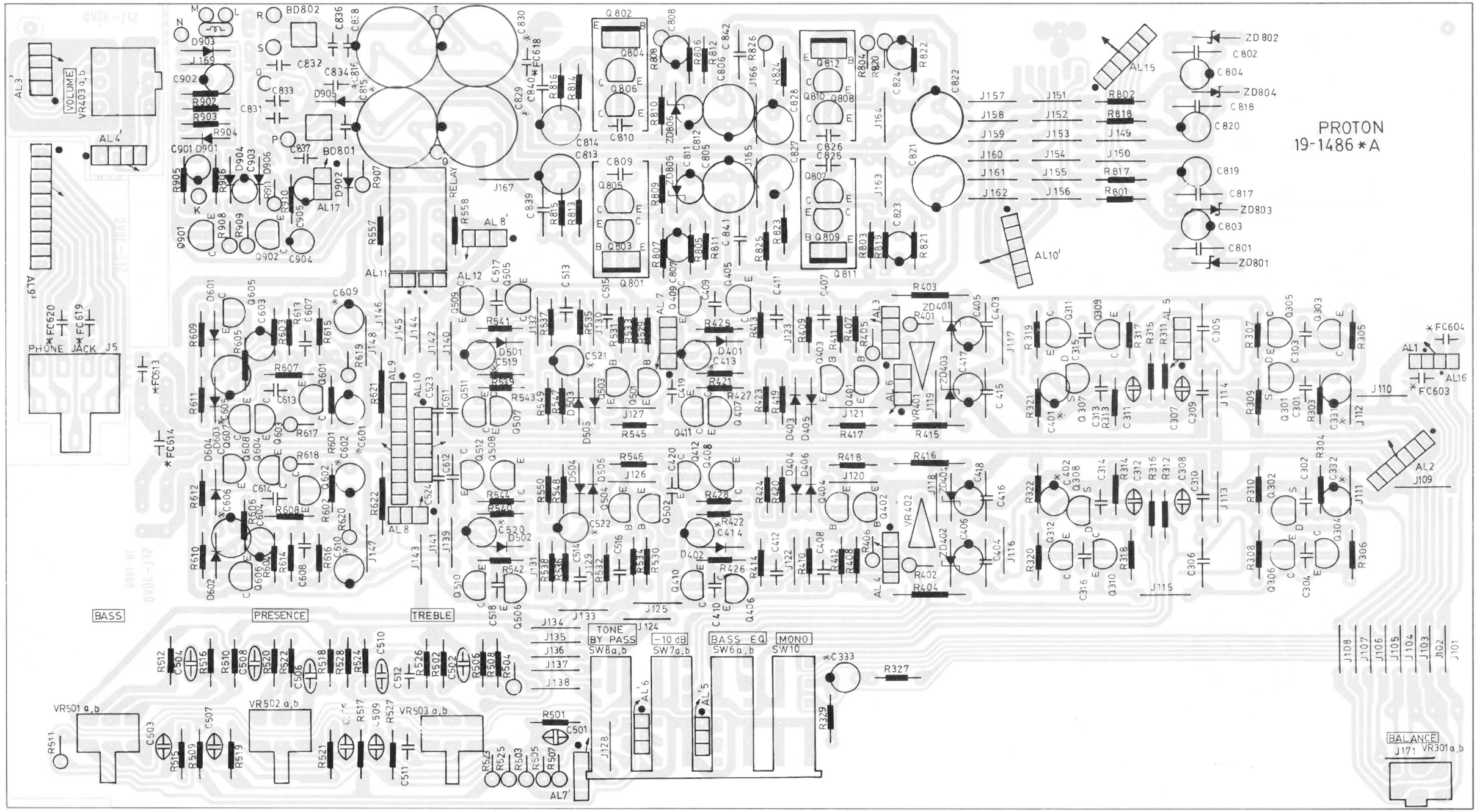

PCB PARTS LOCATION (BOTTOM VIEW)

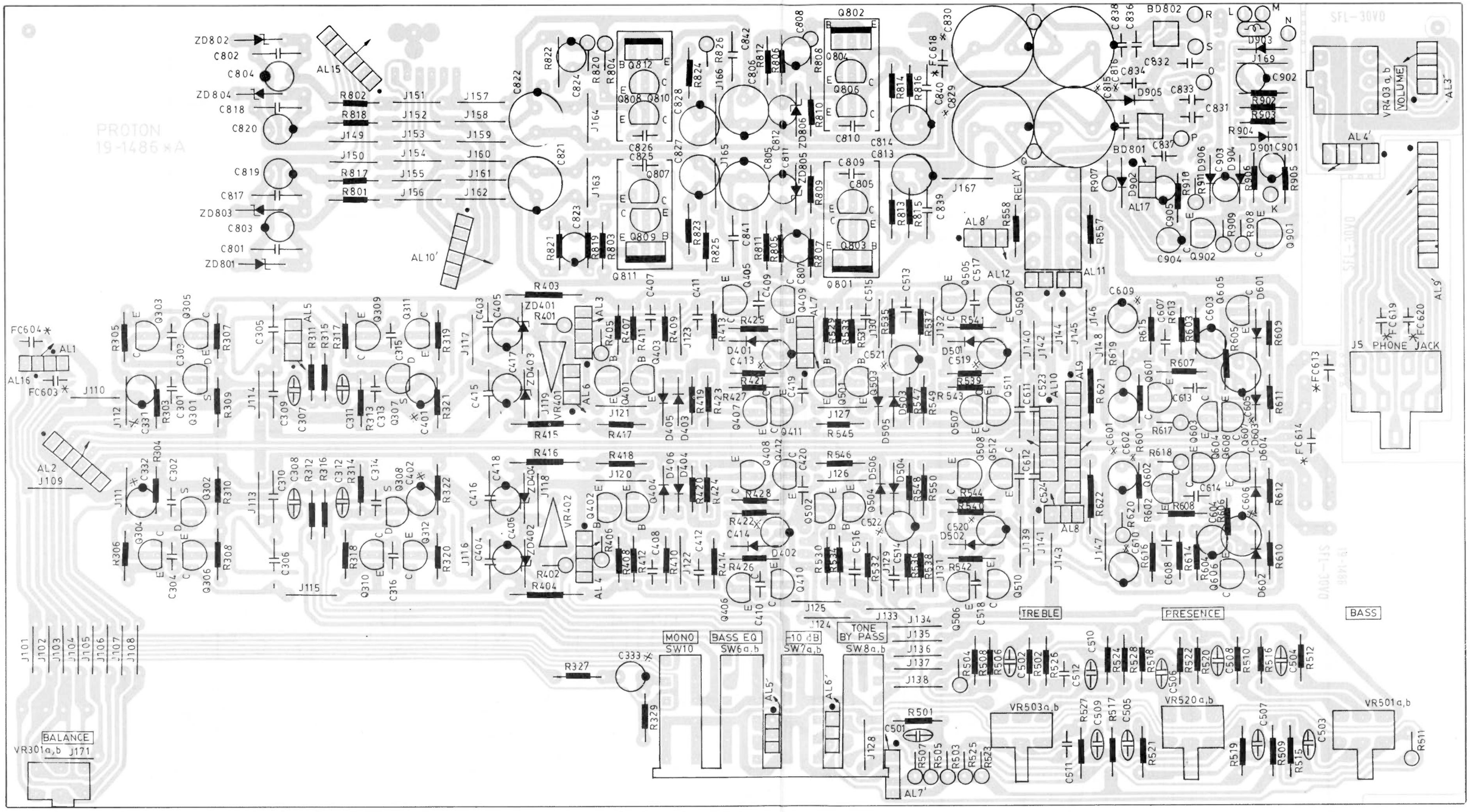

WIRING DIAGRAM

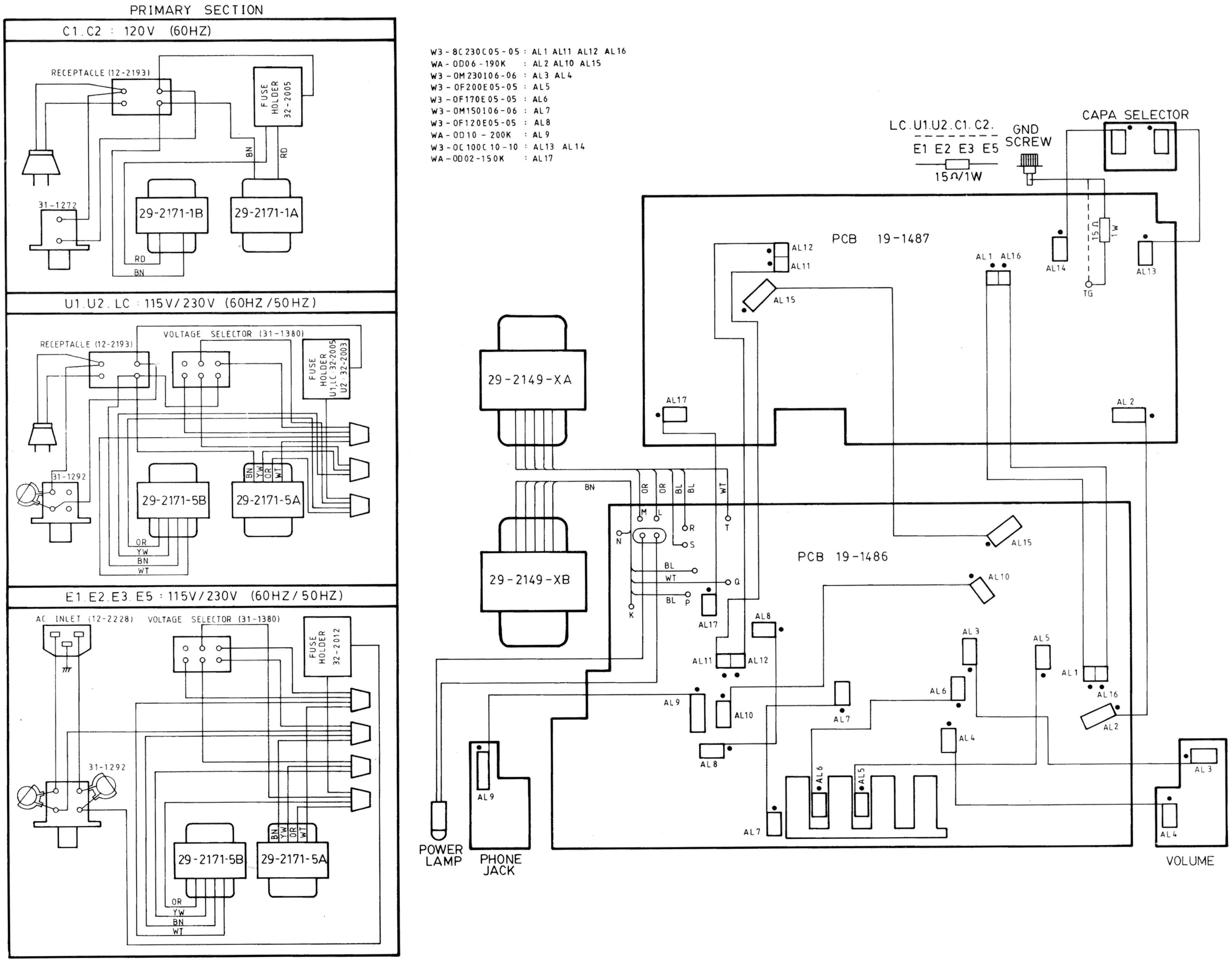

ELECTRICAL PARTS LIST

REF. NO.	PART NO.	DESCRIPTION
VR401	VR03-F08202B	SEMI-FIX 8* 2KB FLAT W/SHAFT
VR402	VR03-F08202B	SEMI-FIX 8* 2KB FLAT W/SHAFT
AL1	W3-8C230C05-05	SHD WIRE #26 1185 230MM
AL2	WA-0D06-190K	JUMPER LEAD ASSY 2877 6X190MM
AL3	W3-0M230I06-06	SHD WIRE #28X3 2791 BK 230
AL4	W3-0M230I06-06	SHD WIRE #28X3 2791 BK 230
AL6	W3-0F170E05-05	SHD WIRE #28X2 2854 170MM GY
AL7	W3-0M150I06-06	SHD WIRE #28X3 2791 BK 150
AL8	W3-0F120E05-05	SHD WIRE #28X2 2854 120MM
AL9	WA-0D10-200K	JUMPER LEAD ASSY 2877 10X200MM
AL10	WA-0D06-190K	JUMPER LEAD ASSY 2877 6X190MM
AL11	W3-8C230C05-05	SHD WIRE #26 1185 230MM
AL12	W3-8C230C05-05	SHD WIRE #26 1185 230MM
AL13	W3-0C100C10-10	SHD WIRE #26 1185 BK
AL14	W3-0C100C10-10	SHD WIRE #26 1185 BK
AL15	WA-0D06-190K	JUMPER LEAD ASSY 2877 6X190MM
AL16	W3-8C230C05-05	SHD WIRE #26 1185 230MM
AL17	WA-0D02-150K	JUMPER LEAD ASSY 2877 2X150MM
J1	12-2246	SOCKET RCA 6P GOLD DUAL GROUND
J2	12-2246	SOCKET RCA 6P GOLD DUAL GROUND
J3	12-2245	SOCKET RCA 4P GOLD DUAL GROND
J4	12-2246	SOCKET RCA 6P GOLD DUAL GROUND
J5	12-2077	MIC JACK PCB LJ306A-HW
TG	13-6A03	PIN 1.2*
R103	16-1/4CA101J	RES C A 100 1/4W +-5%
R104	16-1/4CA101J	RES C A 100 1/4W +-5%
R105	16-1/4CA103J	RES C A 10K 1/4W +-5%
R106	16-1/4CA103J	RES C A 10K 1/4W +-5%
R107	16-1/4CR123J	RES C R 12K 1/4W +-5%
R108	16-1/4CR123J	RES C R 12K 1/4W +-5%
R109	16-1/4CR123J	RES C R 12K 1/4W +-5%
R110	16-1/4CR123J	RES C R 12K 1/4W +-5%
R111	16-1/4CR331J	RES C R 330 1/4W +-5%
R112	16-1/4CR331J	RES C R 330 1/4W +-5%
R113	16-1/4CA561J	RES C A 560 1/4W +-5%
R114	16-1/4CR561J	RES C R 560 1/4W +-5%
R115	16-1/4CA561J	RES C A 560 1/4W +-5%
R116	16-1/4CL561J	RES C L 560 1/4W +-5%
R117	16-1/4CA682J	RES C A 6K8 1/4W +-5%
R118	16-1/4CA682J	RES C A 6K8 1/4W +-5%
R119	16-1/4CR561J	RES C R 560 1/4W +-5%
R120	16-1/4CR561J	RES C R 560 1/4W +-5%
R121	16-1/4CR473J	RES C R 47K 1/4W +-5%
R122	16-1/4CR473J	RES C R 47K 1/4W +-5%
R123	16-1AP150J	RES A P 15 1W +-5%
R123	16-1/4CR224J	RES C R 220K 1/4W +-5%
R124	16-1/4CR224J	RES C R 220K 1/4W +-5%
R201	16-1/4CA473J	RES C A 47K 1/4W +-5%
R202	16-1/4CA473J	RES C A 47K 1/4W +-5%
R203	16-1/4CA103J	RES C A 10K 1/4W +-5%
R204	16-1/4CA103J	RES C A 10K 1/4W +-5%
R205	16-1/4CR562J	RES C R 5K6 1/4W +-5%
R206	16-1/4CR562J	RES C R 5K6 1/4W +-5%
R207	16-1/4CR562J	RES C R 5K6 1/4W +-5%
R208	16-1/4CR562J	RES C R 5K6 1/4W +-5%
R209	16-1/4CR331J	RES C R 330 1/4W +-5%
R210	16-1/4CR331J	RES C R 330 1/4W +-5%
R213	16-1/4CR822J	RES C R 8K2 1/4W +-5%
R214	16-1/4CR822J	RES C R 8K2 1/4W +-5%
R215	16-1/4CR124J	RES C R 120K 1/4W +-5%
R216	16-1/4CR124J	RES C R 120K 1/4W +-5%
R217	16-1/4CR391J	RES C R 390 1/4W +-5%
R218	16-1/4CR391J	RES C R 390 1/4W +-5%
R219	16-1/4CR223J	RES C R 22K 1/4W +-5%
R220	16-1/4CR223J	RES C R 22K 1/4W +-5%

REF. NO.	PART NO.	DESCRIPTION
R221	16-1/4CR331J	RES C R 330 1/4W +-5%
R221	16-1/4CA221J	RES C A 220 1/4W +-5%
R222	16-1/4CA221J	RES C A 220 1/4W +-5%
R222	16-1/4CR331J	RES C R 330 1/4W +-5%
R223	16-1/4CA150J	RES C A 15 1/4W +-5%
R224	16-1/4CA150J	RES C A 15 1/4W +-5%
R225	16-1/4CA150J	RES C A 15 1/4W +-5%
R226	16-1/4CA150J	RES C A 15 1/4W +-5%
R303	16-1/4CA563J	RES C A 56K 1/4W +-5%
R304	16-1/4CA563J	RES C A 56K 1/4W +-5%
R305	16-1/4CA182J	RES C A 1K8 1/4W +-5%
R306	16-1/4CA182J	RES C A 1K8 1/4W +-5%
R307	16-1/4CA221J	RES C A 220 1/4W +-5%
R308	16-1/4CA221J	RES C A 220 1/4W +-5%
R309	16-1/4CA153J	RES C A 15K 1/4W +-5%
R310	16-1/4CA153J	RES C A 15K 1/4W +-5%
R311	16-1/4CA681J	RES C A 680 1/4W +-5%
R312	16-1/4CA681J	RES C A 680 1/4W +-5%
R313	16-1/4CA223J	RES C A 22K 1/4W +-5%
R314	16-1/4CA223J	RES C A 22K 1/4W +-5%
R315	16-1/4CA822J	RES C A 8K2 1/4W +-5%
R316	16-1/4CA822J	RES C A 8K2 1/4W +-5%
R317	16-1/4CA472J	RES C A 4K7 1/4W +-5%
R318	16-1/4CA472J	RES C A 4K7 1/4W +-5%
R319	16-1/4CA222J	RES C A 2K2 1/4W +-5%
R320	16-1/4CA222J	RES C A 2K2 1/4W +-5%
R321	16-1/4CA332J	RES C A 3K3 1/4W +-5%
R322	16-1/4CA332J	RES C A 3K3 1/4W +-5%
R323	16-1/4CA102J	RES C A 1K 1/4W +-5%
R324	16-1/4CA102J	RES C A 1K 1/4W +-5%
R325	16-1/4CA102J	RES C A 1K 1/4W +-5%
R326	16-1/4CA102J	RES C A 1K 1/4W +-5%
R327	16-1/4CA561J	RES C A 560 1/4W +-5%
R329	16-1/4CA564J	RES C A 560K 1/4W +-5%
R401	16-1/4CR123J	RES C R 12K 1/4W +-5%
R402	16-1/4CR123J	RES C R 12K 1/4W +-5%
R403	16-1AN331J	RES A N 330 1W +-5%
R404	16-1AN331J	RES A N 330 1W +-5%
R405	16-1/4CL223J	RES C L 22K 1/4W +-5%
R406	16-1/4CL223J	RES C L 22K 1/4W +-5%
R407	16-1/4CA471J	RES C A 470 1/4W +-5%
R408	16-1/4CA471J	RES C A 470 1/4W +-5%
R409	16-1/4CA221J	RES C A 220 1/4W +-5%
R410	16-1/4CA221J	RES C A 220 1/4W +-5%
R411	16-1/4CA471J	RES C A 470 1/4W +-5%
R412	16-1/4CA471J	RES C A 470 1/4W +-5%
R413	16-1/4CA183J	RES C A 18K 1/4W +-5%
R414	16-1/4CA183J	RES C A 18K 1/4W +-5%
R415	16-1AN331J	RES A N 330 1W +-5%
R416	16-1AN331J	RES A N 330 1W +-5%
R417	16-1/4CA103J	RES C A 10K 1/4W +-5%
R418	16-1/4CA103J	RES C A 10K 1/4W +-5%
R419	16-1/4CA333J	RES C A 33K 1/4W +-5%
R420	16-1/4CA333J	RES C A 33K 1/4W +-5%
R421	16-1/4CA561J	RES C A 560 1/4W +-5%
R422	16-1/4CA561J	RES C A 560 1/4W +-5%
R423	16-1/4CA331J	RES C A 330 1/4W +-5%
R424	16-1/4CA331J	RES C A 330 1/4W +-5%
R425	16-1/4CA470J	RES C A 47 1/4W +-5%
R426	16-1/4CA470J	RES C A 47 1/4W +-5%
R427	16-1/4CA470J	RES C A 47 1/4W +-5%
R428	16-1/4CA470J	RES C A 47 1/4W +-5%
R501	16-1/4CA152J	RES C A 1K5 1/4W +-5%
R502	16-1/4CA152J	RES C A 1K5 1/4W +-5%
R503	16-1/4CR223J	RES C R 22K 1/4W +-5%

www.hifiengine.com

REF. NO.	PART NO.	DESCRIPTION
R504	16-1/4CR223J	RES C R 22K 1/4W +-5%
R506	16-1/4CA273J	RES C A 27K 1/4W +-5%
R507	16-1/4CR184J	RES C R 180K 1/4W +-5%
R508	16-1/4CA184J	RES C A 180K 1/4W +-5%
R509	16-1/4CS123J	RES C S 12K 1/4W +-5%
R510	16-1/4CA123J	RES C A 12K 1/4W +-5%
R511	16-1/4CR123J	RES C R 12K 1/4W +-5%
R512	16-1/4CA123J	RES C A 12K 1/4W +-5%
R515	16-1/4CS273J	RES C S 27K 1/4W +-5%
R516	16-1/4CA273J	RES C A 27K 1/4W +-5%
R517	16-1/4CS272J	RES C S 2K7 1/4W +-5%
R518	16-1/4CA272J	RES C A 2K7 1/4W +-5%
R519	16-1/4CS272J	RES C S 2K7 1/4W +-5%
R520	16-1/4CA272J	RES C A 2K7 1/4W +-5%
R521	16-1/4CS223J	RES C S 22K 1/4W +-5%
R522	16-1/4CA223J	RES C A 22K 1/4W +-5%
R523	16-1/4CR184J	RES C R 180K 1/4W +-5%
R524	16-1/4CA184J	RES C A 180K 1/4W +-5%
R525	16-1/4CR332J	RES C R 3K3 1/4W +-5%
R526	16-1/4CA332J	RES C A 3K3 1/4W +-5%
R527	16-1/4CS332J	RES C S 3K3 1/4W +-5%
R528	16-1/4CA332J	RES C A 3K3 1/4W +-5%
R529	16-1/4CA471J	RES C A 470 1/4W +-5%
R530	16-1/4CA471J	RES C A 470 1/4W +-5%
R531	16-1/4CA221J	RES C A 220 1/4W +-5%
R532	16-1/4CA221J	RES C A 220 1/4W +-5%
R533	16-1/4CA471J	RES C A 470 1/4W +-5%
R534	16-1/4CA471J	RES C A 470 1/4W +-5%
R535	16-1/4CA223J	RES C A 22K 1/4W +-5%
R536	16-1/4CA223J	RES C A 22K 1/4W +-5%
R537	16-1/4CA223J	RES C A 22K 1/4W +-5%
R538	16-1/4CA223J	RES C A 22K 1/4W +-5%
R539	16-1/4CA561J	RES C A 560 1/4W +-5%
R540	16-1/4CA561J	RES C A 560 1/4W +-5%
R541	16-1/4CA470J	RES C A 47 1/4W +-5%
R542	16-1/4CA470J	RES C A 47 1/4W +-5%
R543	16-1/4CA470J	RES C A 47 1/4W +-5%
R544	16-1/4CA470J	RES C A 47 1/4W +-5%
R545	16-1/4CA123J	RES C A 12K 1/4W +-5%
R546	16-1/4CA123J	RES C A 12K 1/4W +-5%
R547	16-1/4CA333J	RES C A 33K 1/4W +-5%
R548	16-1/4CA333J	RES C A 33K 1/4W +-5%
R549	16-1/4CA331J	RES C A 330 1/4W +-5%
R550	16-1/4CA331J	RES C A 330 1/4W +-5%
R551	16-1/4CA224J	RES C A 220K 1/4W +-5%
R552	16-1/4CA224J	RES C A 220K 1/4W +-5%
R553	16-1/4CA561J	RES C A 560 1/4W +-5%
R554	16-1/4CA561J	RES C A 560 1/4W +-5%
R555	16-1/4CA473J	RES C A 47K 1/4W +-5%
R556	16-1/4CA473J	RES C A 47K 1/4W +-5%
R557	16-1/4CA331J	RES C A 330 1/4W +-5%
R558	16-1/4CA331J	RES C A 330 1/4W +-5%
R601	16-1/4CA471J	RES C A 470 1/4W +-5%
R602	16-1/4CA471J	RES C A 470 1/4W +-5%
R603	16-1/4CA103J	RES C A 10K 1/4W +-5%
R604	16-1/4CA103J	RES C A 10K 1/4W +-5%
R605	16-1/4CA103J	RES C A 10K 1/4W +-5%
R606	16-1/4CA103J	RES C A 10K 1/4W +-5%
R607	16-1/4CA122J	RES C A 1K2 1/4W +-5%
R608	16-1/4CA122J	RES C A 1K2 1/4W +-5%
R609	16-1/4CA220J	RES C A 22 1/4W +-5%
R610	16-1/4CA220J	RES C A 22 1/4W +-5%
R611	16-1/4CA220J	RES C A 22 1/4W +-5%
R612	16-1/4CA220J	RES C A 22 1/4W +-5%
R613	16-1/4CA561J	RES C A 560 1/4W +-5%

REF. NO	PART NO.	DESCRIPTION
R614	16-1/4CA561J	RES C A 560 1/4W +-5%
R615	16-1/4CA563J	RES C A 56K 1/4W +-5%
R616	16-1/4CA563J	RES C A 56K 1/4W +-5%
R617	16-1/4CR222J	RES C R 2K2 1/4W +-5%
R618	16-1/4CR222J	RES C R 2K2 1/4W +-5%
R619	16-1/4CR223J	RES C R 22K 1/4W +-5%
R620	16-1/4CR223J	RES C R 22K 1/4W +-5%
R621	16-1AN101J	RES A N 100 1W +-5%
R622	16-1AN101J	RES A N 100 1W +-5%
R701	16-1/4CA223J	RES C A 22K 1/4W +-5%
R702	16-1/4CA223J	RES C A 22K 1/4W +-5%
R703	16-1/4CR103J	RES C R 10K 1/4W +-5%
R704	16-1/4CR103J	RES C R 10K 1/4W +-5%
R705	16-1/4CA103J	RES C A 10K 1/4W +-5%
R706	16-1/4CA103J	RES C A 10K 1/4W +-5%
R707	16-1/4CA103J	RES C A 10K 1/4W +-5%
R708	16-1/4CA103J	RES C A 10K 1/4W +-5%
R709	16-1/4CA103J	RES C A 10K 1/4W +-5%
R710	16-1/4CA103J	RES C A 10K 1/4W +-5%
R711	16-1/4CA473J	RES C A 47K 1/4W +-5%
R712	16-1/4CA473J	RES C A 47K 1/4W +-5%
R713	16-1/4CA473J	RES C A 47K 1/4W +-5%
R714	16-1/4CA473J	RES C A 47K 1/4W +-5%
R715	16-1/4CA563J	RES C A 56K 1/4W +-5%
R716	16-1/4CA563J	RES C A 56K 1/4W +-5%
R717	16-1/4CA563J	RES C A 56K 1/4W +-5%
R718	16-1/4CA563J	RES C A 56K 1/4W +-5%
R721	16-1/4CA223J	RES C A 22K 1/4W +-5%
R722	16-1/4CA223J	RES C A 22K 1/4W +-5%
R723	16-1/4CA102J	RES C A 1K 1/4W +-5%
R724	16-1/4CA102J	RES C A 1K 1/4W +-5%
R725	16-1/4CA102J	RES C A 1K 1/4W +-5%
R726	16-1/4CA102J	RES C A 1K 1/4W +-5%
R801	16-1/4CA122J	RES C A 1K2 1/4W +-5%
R802	16-1/4CA122J	RES C A 1K2 1/4W +-5%
R803	16-1/4CA333J	RES C A 33K 1/4W +-5%
R804	16-1/4CR333J	RES C R 33K 1/4W +-5%
R805	16-1/4CA273J	RES C A 27K 1/4W +-5%
R806	16-1/4CA273J	RES C A 27K 1/4W +-5%
R807	16-1/4CA184J	RES C A 180K 1/4W +-5%
R808	16-1/4CS184J	RES C S 180K 1/4W +-5%
R809	16-1/4CA103J	RES C A 10K 1/4W +-5%
R810	16-1/4CA103J	RES C A 10K 1/4W +-5%
R811	16-1/4CA223J	RES C A 22K 1/4W +-5%
R812	16-1/4CA223J	RES C A 22K 1/4W +-5%
R813	16-1/4CA101J	RES C A 100 1/4W +-5%
R814	16-1/4CA101J	RES C A 100 1/4W +-5%
R815	16-1/4CA562J	RES C A 5K6 1/4W +-5%
R816	16-1/4CA562J	RES C A 5K6 1/4W +-5%
R817	16-1/4CA122J	RES C A 1K2 1/4W +-5%
R818	16-1/4CA122J	RES C A 1K2 1/4W +-5%
R819	16-1/4CA333J	RES C A 33K 1/4W +-5%
R820	16-1/4CS333J	RES C S 33K 1/4W +-5%
R821	16-1/4CA125J	RES C A 1M2 1/4W +-5%
R822	16-1/4CA125J	RES C A 1M2 1/4W +-5%
R823	16-1/4CA101J	RES C A 100 1/4W +-5%
R824	16-1/4CA101J	RES C A 100 1/4W +-5%
R825	16-1/4CA562J	RES C A 5K6 1/4W +-5%
R826	16-1/4CR562J	RES C R 5K6 1/4W +-5%
R902	16-1/4CA272J	RES C A 2K7 1/4W +-5%
R903	16-1/4CA331J	RES C A 330 1/4W +-5%
R904	16-1/4CA155J	RES C A 1M5 1/4W +-5%
R905	16-1/4CA563J	RES C A 56K 1/4W +-5%
R906	16-1/4CA124J	RES C A 120K 1/4W +-5%

www.hifiengine.com

REF. NO.	PART NO.	DESCRIPTION
R907	16-1/4CL101J	RES C L 100 1/4W +-5%
R908	16-1/4CL103J	RES C L 10K 1/4W +-5%
R909	16-1/4CR473J	RES C R 47K 1/4W +-5%
R910	16-1/4CA822J	RES C A 8K2 1/4W +-5%
R911	16-1/4CR225J	RES C R 2M2 1/4W +-5%
R912	16-1/4CR106J	RES C R 10M 1/4W +-5%
R910	16-1/4CA822J	RES C A 8K2 1/4W +-5%
R911	16-1/4CR225J	RES C R 2M2 1/4W +-5%
R912	16-1/4CR106J	RES C R 10M 1/4W +-5%
FR601	16-1/4CS472J	RES C S 4K7 1/4W +-5%
C105	17-5DF102K	CAP D F 1000P 50V +-10%
C106	17-5DF102K	CAP D F 1000P 50V +-10%
C109	17-2075	CAP AUDIO 220U 10V +-20%
C110	17-2075	CAP AUDIO 220U 10V +-20%
C115	17-2066	CAP AUDIO 4.7UF 6.3V
C116	17-2066	CAP AUDIO 4.7UF 6.3V
C201	17-5DR101JSL	CAP D R 100P 50V +-5% SL
C202	17-5DR101JSL	CAP D R 100P 50V +-5% SL
C203	17-5DR101JSL	CAP D R 100P 50V +-5% SL
C204	17-5DR101JSL	CAP D R 100P 50V +-5% SL
C205	17-5DR221JSL	CAP D R 220P 50V +-5% SL
C206	17-5DR221JSL	CAP D R 220P 50V +-5% SL
C213	17-2066	CAP AUDIO 4.7UF 6.3V
C214	17-2066	CAP AUDIO 4.7UF 6.3V
C215	17-5DR331JSL	CAP D R 330P 50V +-5% SL
C216	17-5DR331JSL	CAP D R 330P 50V +-5% SL
C217	17-5DF470JPH	CAP D F 47P 50V +-5% PH
C217	17-2075	CAP AUDIO 220U 10V +-20%
C218	17-5DF470JPH	CAP D F 47P 50V +-5% PH
C218	17-2075	CAP AUDIO 220U 10V +-20%
C219	17-2.5EF227M	CAP E F 220U 25V +-20%
C220	17-2.5EF227M	CAP E F 220U 25V +-20%
C221	17-2.5EF227M	CAP E F 220U 25V +-20%
C222	17-2.5EF227M	CAP E F 220U 25V +-20%
C303	17-5DR180JSL	CAP D R 18P 50V +-5% SL
C304	17-5DF180KPH	CAP D F 18P 50V +-10% PH
C305	17-5DH104Z	CAP D H 0.1U 50V +80-20%
C306	17-5DH104Z	CAP D H 0.1U 50V +80-20%
C309	17-5DH104Z	CAP D H 0.1U 50V +80-20%
C310	17-5DH104Z	CAP D H 0.1U 50V +80-20%
C315	17-5DR330JSL	CAP D R 33P 50V +-5% SL
C316	17-5DF330K	CAP D F 33P 50V +-10%
C317	17-5DR331JSL	CAP D R 330P 50V +-5% SL
C318	17-5DR331JSL	CAP D R 330P 50V +-5% SL
C319	17-5DR331JSL	CAP D R 330P 50V +-5% SL
C320	17-5DR331JSL	CAP D R 330P 50V +-5% SL
C321	17-5DR331JSL	CAP D R 330P 50V +-5% SL
C322	17-5DR331JSL	CAP D R 330P 50V +-5% SL
C323	17-5DR331JSL	CAP D R 330P 50V +-5% SL
C324	17-5DR331JSL	CAP D R 330P 50V +-5% SL
C325	17-5DR331JSL	CAP D R 330P 50V +-5% SL
C326	17-5DR331JSL	CAP D R 330P 50V +-5% SL
C327	17-5DR331JSL	CAP D R 330P 50V +-5% SL
C328	17-5DR331JSL	CAP D R 330P 50V +-5% SL
C329	17-5DR331JSL	CAP D R 330P 50V +-5% SL
C330	17-5DR331JSL	CAP D R 330P 50V +-5% SL
C331	17-2066	CAP AUDIO 4.7UF 6.3V
C332	17-2066	CAP AUDIO 4.7UF 6.3V
C333	17-2066	CAP AUDIO 4.7UF 6.3V
C401	17-2065	CAP AUDIO 47UF 6.3V
C402	17-2065	CAP AUDIO 47UF 6.3V
C403	17-5DH104Z	CAP D H 0.1U 50V +80-20%
C404	17-5DH104Z	CAP D H 0.1U 50V +80-20%
C405	17-2.5ER476M	CAP E R 47U 25V +-20%

REF. NO.	PART NO.	DESCRIPTION
C406	17-2.5ER476M	CAP E R 47U 25V +-20%
C407	17-5DF221K	CAP D F 220P 50V +-10%
C408	17-5DF221K	CAP D F 220P 50V +-10%
C410	17-5DF820JSL	CAP D F 82P 50V +-5% SL
C411	17-5DF820JSL	CAP D F 82P 50V +-5% SL
C412	17-5DF820JSL	CAP D F 82P 50V +-5% SL
C413	17-2064	CAP AUDIO 100UF6.3V
C414	17-2064	CAP AUDIO 100UF6.3V
C415	17-5DH104Z	CAP D H 0.1U 50V +80-20%
C416	17-5DH104Z	CAP D H 0.1U 50V +80-20%
C417	17-2.5ER476M	CAP E R 47U 25V +-20%
C418	17-2.5ER476M	CAP E R 47U 25V +-20%
C511	17-5DR331JSL	CAP D R 330P 50V +-5% SL
C512	17-5DR331JSL	CAP D R 330P 50V +-5% SL
C513	17-5DF820JSL	CAP D F 82P 50V +-5% SL
C514	17-5DF820JSL	CAP D F 82P 50V +-5% SL
C515	17-5DF221K	CAP D F 220P 50V +-10%
C516	17-5DF221K	CAP D F 220P 50V +-10%
C518	17-5DF820JSL	CAP D F 82P 50V +-5% SL
C519	17-2064	CAP AUDIO 100UF6.3V
C520	17-2064	CAP AUDIO 100UF6.3V
C521	17-2065	CAP AUDIO 47UF 6.3V
C522	17-2065	CAP AUDIO 47UF 6.3V
C523	17-5DH104Z	CAP D H 0.1U 50V +80-20%
C524	17-5DH104Z	CAP D H 0.1U 50V +80-20%
C527	17-2065	CAP AUDIO 47UF 6.3V
C528	17-2065	CAP AUDIO 47UF 6.3V
C601	17-5DR331JSL	CAP D R 330P 50V +-5% SL
C601	17-2064	CAP AUDIO 100UF6.3V
C602	17-2064	CAP AUDIO 100UF6.3V
C603	17-2.5ER476M	CAP E R 47U 25V +-20%
C604	17-2.5ER476M	CAP E R 47U 25V +-20%
C605	17-2075	CAP AUDIO 220U 10V +-20%
C606	17-2075	CAP AUDIO 220U 10V +-20%
C607	17-5DF820JSL	CAP D F 82P 50V +-5% SL
C608	17-5DF820JSL	CAP D F 82P 50V +-5% SL
C609	17-2065	CAP AUDIO 47UF 6.3V
C610	17-2065	CAP AUDIO 47UF 6.3V
C611	17-5DH104Z	CAP D H 0.1U 50V +80-20%
C612	17-5DH104Z	CAP D H 0.1U 50V +80-20%
C701	17-2065	CAP AUDIO 47UF 6.3V
C702	17-2065	CAP AUDIO 47UF 6.3V
C709	17-2065	CAP AUDIO 47UF 6.3V
C710	17-2065	CAP AUDIO 47UF 6.3V
C715	17-5DF470JPH	CAP D F 47P 50V +-5% PH
C716	17-5DF470JPH	CAP D F 47P 50V +-5% PH
C717	17-2065	CAP AUDIO 47UF 6.3V
C718	17-2065	CAP AUDIO 47UF 6.3V
C801	17-5DH104Z	CAP D H 0.1U 50V +80-20%
C802	17-5DH104Z	CAP D H 0.1U 50V +80-20%
C803	17-2.5ER476M	CAP E R 47U 25V +-20%
C804	17-2.5ER476M	CAP E R 47U 25V +-20%
C805	17-3.5EF227M	CAP E F 220U 35V +-20%
C806	17-3.5EF227M	CAP E F 220U 35V +-20%
C807	17-2.5ER476M	CAP E R 47U 25V +-20%
C808	17-2.5ER476M	CAP E R 47U 25V +-20%
C810	17-5DF820JSL	CAP D F 82P 50V +-5% SL
C811	17-2.5ER476M	CAP E R 47U 25V +-20%
C812	17-2.5ER476M	CAP E R 47U 25V +-20%
C813	17-3.5ER476M	CAP E R 47U 35V +-20%
C814	17-3.5ER476M	CAP E R 47U 35V +-20%
C815	17-2074	CAP AUDIO 1000UF 50V +-20%
C816	17-2074	CAP AUDIO 1000UF 50V +-20%
C817	17-5DH104Z	CAP D H 0.1U 50V +80-20%

www.hifiengine.com

REF. NO.	PART NO.	DESCRIPTION
C818	17-5DH104Z	CAP D H 0.1U 50V +80-20%
C819	17-2.5ER476M	CAP E R 47U 25V +-20%
C820	17-5DF820JSL	CAP D F 82P 50V +-5% SL
C820	17-2.5ER476M	CAP E R 47U 25V +-20%
C821	17-3.5EF227M	CAP E F 220U 35V +-20%
C822	17-3.5EF227M	CAP E F 220U 35V +-20%
C823	17-3.5ER476M	CAP E R 47U 35V +-20%
C824	17-3.5ER476M	CAP E R 47U 35V +-20%
C827	17-3.5ER476M	CAP E R 47U 35V +-20%
C828	17-3.5ER476M	CAP E R 47U 35V +-20%
C829	17-2074	CAP AUDIO 1000UF 50V +-20%
C830	17-2074	CAP AUDIO 1000UF 50V +-20%
C831	17-5DR103M	CAP D R 0.01U 50V +-20%
C832	17-5DR103M	CAP D R 0.01U 50V +-20%
C833	17-5DR103M	CAP D R 0.01U 50V +-20%
C834	17-5DR103M	CAP D R 0.01U 50V +-20%
C835	17-5DR103M	CAP D R 0.01U 50V +-20%
C836	17-5DR103M	CAP D R 0.01U 50V +-20%
C837	17-5DR103M	CAP D R 0.01U 50V +-20%
C838	17-5DR103M	CAP D R 0.01U 50V +-20%
C839	17-5DH104Z	CAP D H 0.1U 50V +80-20%
C840	17-5DH104Z	CAP D H 0.1U 50V +80-20%
C841	17-5DH104Z	CAP D H 0.1U 50V +80-20%
FR602	16-1/4CS472J	RES C S 4K7 1/4W +-5%
FR603	16-1/4CL561J	RES C L 560 1/4W +-5%
FR604	16-1/4CS561J	RES C S 560 1/4W +-5%
C842	17-5DH104Z	CAP D H 0.1U 50V +80-20%
C901	17-2.5ER476M	CAP E R 47U 25V +-20%
C903	17-3.5ER476M	CAP E R 47U 35V +-20%
C111	17-5DR470JSL	CAP D R 47P 50V +-5% SL
C112	17-5DR470JSL	CAP D R 47P 50V +-5% SL
C301	17-5DR470JSL	CAP D R 47P 50V +-5% SL
C302	17-5DR470JSL	CAP D R 47P 50V +-5% SL
C703	17-5DR470JSL	CAP D R 47P 50V +-5% SL
C704	17-5DR470JSL	CAP D R 47P 50V +-5% SL
C107	17-5DR681K	CAP D R 680P 50V +-10%
C108	17-5DR681K	CAP D R 680P 50V +-10%
C113	17-5DR681K	CAP D R 680P 50V +-10%
C114	17-5DR681K	CAP D R 680P 50V +-10%
C207	17-5DR681K	CAP D R 680P 50V +-10%
C208	17-5DR681K	CAP D R 680P 50V +-10%
C313	17-5DR820JSL	CAP D R 82P 50V +-5% SL
C314	17-5DR820JSL	CAP D R 82P 50V +-5% SL
C409	17-5DR820JSL	CAP D R 82P 50V +-5% SL
C419	17-5DR820JSL	CAP D R 82P 50V +-5% SL
C420	17-5DR820JSL	CAP D R 82P 50V +-5% SL
C517	17-5DR820JSL	CAP D R 82P 50V +-5% SL
C613	17-5DR820JSL	CAP D R 82P 50V +-5% SL
C614	17-5DR820JSL	CAP D R 82P 50V +-5% SL
C809	17-5DR820JSL	CAP D R 82P 50V +-5% SL
C825	17-5DR820JSL	CAP D R 82P 50V +-5% SL
C614	17-5DR820JSL	CAP D R 82P 50V +-5% SL
C809	17-5DR820JSL	CAP D R 82P 50V +-5% SL
C825	17-5DR820JSL	CAP D R 82P 50V +-5% SL
C902	17-5ER475M	CAP E R 4.7U 50V +-20%
C904	17-5ER475M	CAP E R 4.7U 50V +-20%
C905	17-5ER475M	CAP E R 4.7U 50V +-20%
C501	17-5FF103J	CAP F F 0.01U 50V +-5%
C510	17-5FF122J	CAP F F 1200P 50V +-5%
C506	17-5FF752J	CAP F F 7500P 50V +-5%
C209	17-5FR103J	CAP F R 0.01U 50V +-5%
C210	17-5FR103J	CAP F R 0.01U 50V +-5%
C502	17-5FR103J	CAP F R 0.01U 50V +-5%
C509	17-5FR122J	CAP F R 1200P 50V +-5%
C211	17-5FR223J	CAP F R 0.022U 50V +-5%

REF. NO.	PART NO.	DESCRIPTION
C212	17-5FR223J	CAP F R 0.022U 50V +-5%
C503	17-5FR273J	CAP F R 0.027U 50V +-5%
C504	17-5FR273J	CAP F R 0.027U 50V +-5%
C705	17-5FR273J	CAP F R 0.027U 50V +-5%
C706	17-5FR273J	CAP F R 0.027U 50V +-5%
C707	17-5FR273J	CAP F R 0.027U 50V +-5%
C708	17-5FR273J	CAP F R 0.027U 50V +-5%
C507	17-5FR682J	CAP F R 6800P 50V +-5%
C508	17-5FR682J	CAP F R 6800P 50V +-5%
C505	17-5FR752J	CAP F R 7500P 50V +-5%
C307	17-5HF105J	CAP H F 1U 50V +-5%
C308	17-5HF105J	CAP H F 1U 50V +-5%
C311	17-5HF105J	CAP H F 1U 50V +-5%
C312	17-5HF105J	CAP H F 1U 50V +-5%
C311	17-5HF105J	CAP H F 1U 50V +-5%
C312	17-5HF105J	CAP H F 1U 50V +-5%
FC601	17-5DR331JSL	CAP D R 330P 50V +-5% SL
FC602	17-5DR331JSL	CAP D R 330P 50V +-5% SL
FC603	17-5D561JSL	CAP D 560P 50V +-5% SL
FC604	17-5D561JSL	CAP D 560P 50V +-5% SL
FL601	29-1175	COIL 3.7MH +20-10%
FL602	29-1175	COIL 3.7MH +20-10%
VR301	29-4071F	VR 16* 50KMNX2 P1K25
VR402	29-4288	VR 10KBX2 RK27112B-10KBX2
VR501	29-4315	VR 16* RK163121A338-50KBX2 FL
VR502	29-4315	VR 16* RK163121A338-50KBX2 FL
VR503	29-4315	VR 16* RK163121A338-50KBX2 FL
D901	30-1002	DIODE RECTI 100V1A 1N4002/10D1
D902	30-1002	DIODE RECTI 100V1A 1N4002/10D1
D904	30-1002	DIODE RECTI 100V1A 1N4002/10D1
D905	30-1002	DIODE RECTI 100V1A 1N4002/10D1
⚠ BD801	30-1040	DIODE BRIDGE 200V1.5A W02
⚠ BD802	30-1040	DIODE BRIDGE 200V1.5A W02
ZD401	30-1041-1	DIODE ZENER HZ22-2
ZD402	30-1041-1	DIODE ZENER HZ22-2
ZD403	30-1041-1	DIODE ZENER HZ22-2
ZD404	30-1041-1	DIODE ZENER HZ22-2
ZD801	30-1041-1	DIODE ZENER HZ22-2
ZD802	30-1041-1	DIODE ZENER HZ22-2
ZD803	30-1041-1	DIODE ZENER HZ22-2
ZD804	30-1041-1	DIODE ZENER HZ22-2
ZD805	30-1063	DIODE ZENER RD9.1EB3
ZD806	30-1063	DIODE ZENER RD9.1EB3
D401	30-1152TA	DIODE 1N4148 A-TYPE
D402	30-1152TA	DIODE 1N4148 A-TYPE
D403	30-1152TA	DIODE 1N4148 A-TYPE
D404	30-1152TA	DIODE 1N4148 A-TYPE
D405	30-1152TA	DIODE 1N4148 A-TYPE
D406	30-1152TA	DIODE 1N4148 A-TYPE
D501	30-1152TA	DIODE 1N4148 A-TYPE
D502	30-1152TA	DIODE 1N4148 A-TYPE
D503	30-1152TA	DIODE 1N4148 A-TYPE
D504	30-1152TA	DIODE 1N4148 A-TYPE
D505	30-1152TA	DIODE 1N4148 A-TYPE
D506	30-1152TA	DIODE 1N4148 A-TYPE
D601	30-1152TA	DIODE 1N4148 A-TYPE
D602	30-1152TA	DIODE 1N4148 A-TYPE
D603	30-1152TA	DIODE 1N4148 A-TYPE
D604	30-1152TA	DIODE 1N4148 A-TYPE
D701	30-1152TA	DIODE 1N4148 A-TYPE
D702	30-1152TA	DIODE 1N4148 A-TYPE
D703	30-1152TA	DIODE 1N4148 A-TYPE
D704	30-1152TA	DIODE 1N4148 A-TYPE
D903	30-1152TA	DIODE 1N4148 A-TYPE
D906	30-1152TA	DIODE 1N4148 A-TYPE

www.hifiengine.com

REF. NO.	PART NO.	DESCRIPTION
Q101	30-2090-2	TR BC546B N 200MA 65V
Q102	30-2090-2	TR BC546B N 200MA 65V
Q201	30-2090-2	TR BC546B N 200MA 65V
Q202	30-2090-2	TR BC546B N 200MA 65V
Q301	30-2090-2	TR BC546B N 200MA 65V
Q302	30-2090-2	TR BC546B N 200MA 65V
Q303	30-2090-2	TR BC546B N 200MA 65V
Q304	30-2090-2	TR BC546B N 200MA 65V
Q305	30-2090-2	TR BC546B N 200MA 65V
Q306	30-2090-2	TR BC546B N 200MA 65V
Q307	30-2090-2TR	TR BC546B TAPING N 200MA 65V
Q308	30-2090-2TR	TR BC546B TAPING N 200MA 65V
Q309	30-2090-2TR	TR BC546B TAPING N 200MA 65V
Q310	30-2090-2TR	TR BC546B TAPING N 200MA 65V
Q311	30-2090-2TR	TR BC546B TAPING N 200MA 65V
Q312	30-2090-2TR	TR BC546B TAPING N 200MA 65V
Q401	30-2090-2TR	TR BC546B TAPING N 200MA 65V
Q402	30-2090-2TR	TR BC546B TAPING N 200MA 65V
Q403	30-2090-2TR	TR BC546B TAPING N 200MA 65V
Q404	30-2090-2TR	TR BC546B TAPING N 200MA 65V
Q405	30-2090-2TR	TR BC546B TAPING N 200MA 65V
Q406	30-2096	TR BC556B P -100MA -65V
Q407	30-2096	TR BC556B P -100MA -65V
Q408	30-2096	TR BC556B P -100MA -65V
Q409	30-2096	TR BC556B P -100MA -65V
Q410	30-2096-2TR	TR BC556B TAPING P -100MA -65V
Q411	30-2096-2TR	TR BC556B TAPING P -100MA -65V
Q412	30-2096-2TR	TR BC556B TAPING P -100MA -65V
Q501	30-2096-2TR	TR BC556B TAPING P -100MA -65V
Q502	30-2096-2TR	TR BC556B TAPING P -100MA -65V
Q503	30-2096-2TR	TR BC556B TAPING P -100MA -65V
Q504	30-2096-2TR	TR BC556B TAPING P -100MA -65V
Q505	30-2096-2TR	TR BC556B TAPING P -100MA -65V
Q506	30-2096-2TR	TR BC556B TAPING P -100MA -65V
Q507	30-2096-2TR	TR BC556B TAPING P -100MA -65V
Q508	30-2096-2TR	TR BC556B TAPING P -100MA -65V
Q509	30-2096-2TR	TR BC556B TAPING P -100MA -65V
Q510	30-2096-2TR	TR BC556B TAPING P -100MA -65V
Q511	30-2096-2TR	TR BC556B TAPING P -100MA -65V
Q512	30-2096-2TR	TR BC556B TAPING P -100MA -65V
Q601	30-2096-2TR	TR BC556B TAPING P -100MA -65V
Q602	30-2096-2TR	TR BC556B TAPING P -100MA -65V
Q603	30-2259	TR 2SB649AC P -1.5A -160V
Q604	30-2259	TR 2SB649AC P -1.5A -160V
Q605	30-2260	TR 2SD669AC N 1.5A 160V
Q606	30-2260	TR 2SD669AC N 1.5A 160V
Q607	30-2264	FET 2SK163K/L
Q608	30-2264	FET 2SK163K/L
Q701	30-2264	FET 2SK163K/L
Q702	30-2264	FET 2SK163K/L
Q703	30-2265	FET J111
Q704	30-2265	FET J111
Q801	30-2265	FET J111
Q802	30-2265	FET J111
Q803	30-2349	TR 2SC2602G/H P 200MA 70V
Q804	30-2349	TR 2SC2602G/H P 200MA 70V
Q805	30-2349	TR 2SC2602G/H P 200MA 70V
Q806	30-2349	TR 2SC2602G/H P 200MA 70V
Q807	30-2349	TR 2SC2602G/H P 200MA 70V
Q808	30-2349	TR 2SC2602G/H P 200MA 70V
Q809	30-2349	TR 2SC2602G/H P 200MA 70V
Q810	30-2349	TR 2SC2602G/H P 200MA 70V
Q811	30-2431	FET 2SK146
Q812	30-2431	FET 2SK146
Q901	30-2432	FET 2ST73

REF. NO.	PART NO.	DESCRIPTION
Q902	30-2432	FET 2ST73
IC201	30-3247	IC DUAL OP M5219L 8P
IC202	30-3247	IC DUAL OP M5219L 8P
IC701	30-3247	IC DUAL OP M5219L 8P
IC702	30-3247	IC DUAL OP M5219L 8P
SW1	31-1079F	SW SLIDE SSB23FL025
SW2	31-1276	SW PUSH SPJ222NE01-FL
SW3	31-1276	SW PUSH SPJ222NE01-FL
SW4	31-1276	SW PUSH SPJ222NE01-FL
SW5	31-1346	SW ROT SRS046N08-FL
SW9AC	31-1346	SW ROT SRS046N08-FL
SW9BD	31-1391	SW PUSH SPUL 41K801 FL
SW10,6-8	31-1272	SW PW PUSH UL/CSA/VDE/SEMKO
SW13	31-1275	SW PUSH SPJ242NE01-FL
LP801	31-2044	LAMP 4.75MMD 6.3V 150MA 320MM
L901	35-3048*A	RELAY R/P ORZ-SS-224D
	12-2193	RECEPTACLE UL/CSA AC-T05FB13
	14-5049*A	PW CORD SPT-2 #18 PLUG W/P
	29-2171-1A	XFMR PW R-20 120V UL/CSA
	29-2171-1B	XFMR PW R-20 120V UL/CSA
	31-1272	SW PW PUSH UL-CSA/VDE/SEMKO SW13
	32-13000W	FUSE 6.3x32MM ULCSA SLOW 300MA
	32-2005	FUSE HOLDER PAN 32MM FH-032
	12-2228	AC INLET
	14-5064	PW CORD 3x0.75SQMM PLUG DNSF
	29-2171-5A	XFMR PW R-20 115/230V DNSF
	29-2171-5B	XFMR PW R-20 115/230V DNSF
	31-1292	SW PW PUSH ESB-90702V SW11
	31-1380	SW VOLTAGE SELECTOR
⚠	32-12000S	FUSE 5x20MM SEMKO SLOW 200MA (230V)
⚠	32-14000S	FUSE 5x20MM SEMKO SLOW 400MA (115V)
	32-2012	FUSE HOLDER FH-B02 SEMKO
	32-2003	FUSE HOLDER PAN 20MM FH-033
	14-5064	PW CORD 3x0.75SQMM PLUG DNSF
	29-2171-5A	XFMR PW R-20 115/230V DNSF
	29-2171-5B	XFMR PW R-20 115/230V DNSF
	31-1292	SW PW PUSH ESB-90702V SW11
	31-1380	SW VOLTAGE SELECTOR
⚠	32-12000S	FUSE 5x20MM SEMKO SLOW 200MA (230V)
⚠	32-14000S	FUSE 5x20MM SEMKO SLOW 400MA (115V)
	32-2012	FUSE HOLDER FH-B02 SEMKO
	32-2003	FUSE HOLDER PAN 20MM FH-033

www.hifiengine.com

MECHANICAL PARTS LIST

ITEM	PART NO.	DESCRIPTION	Q'TY
1	11-8441	FRONT PANEL	1
2	12-3195	KNOB B	1
3	12-3194	KNOB A	6
4	12-7042	BUSHING A	1
5	12-3193	PUSH KNOB	1
6	11-9161	SHIELD	1
7	12-7044	PW SW CONNETOR	1
8	31-2044	LAMP	1
9	11-2403	BRACKET	1
10	11-2328*A	BRACKET HEADPHONES	1
11	12-7034	BUSHING	1
12	28-2120	MASKER	7
13	15-5014	E-RING 5Ø	4
14	13-4027*A	TUBE FOR SHAFT	2
15	11-7080	SHAFT	2
16	12-7003*A	TUBE	2
17	11-6243	CHASSIS L	1
18	29-2171-x	TRANSFORMER	2
19	13-4111	FIBER	1
20	11-6216	BOTTOM COVER	1
21	28-2134	RETAINER	3
22	11-6245	CHASSIS CENTER	1
23	11-8442	BACK PANEL	1
24	N3.5B06I2.8SZ	NUT ST ZMC 3A	1
25	A3.5I07SZ01	G/W ST ZMC 3A	1
26	A3.5A09SN01	WASHER	1
27	15-2037*C	GROUND SCREW	1
28	12-3T02	POWER SW KNOB	3
29	12-2193	AC OUTLET	1
30	11-1T43*1	TOP COVER	1
31	11-6246	FRONT CHASSIS	1
32	28-1029	RUBBER FEET	3
33	15-2063	STANDER'S SCREW	4
34	28-2090	RETAINER	6
35	15-2063	SPECIAL SCREW	4
36	12-3T08	PUSH SW KNOB	4
37	21-3065	LABEL SERIAL NO.	1
38	15-2075	SPECIAL SCREW	4
39	S1B2.6+I04SL-2	MACHINE SCREW	3
40	S2B03+I08SL-2	TAPPING SCREW	15
41	S2B03+I06SL-2	TAPPING SCREW	31
42	S1B03+I06SZ-2	MACHINE SCREW	11
43	S2E03+I08SL-2	TAPPING SCREW	5
44	11-6242	CHASSIS R	1
45	11-6244	CHASSIS CENTER	1
46	11-9192	SCREW STOPPER	1
47	11-2456	SW BRACKET	3
48	11-2455 *A	VR BRACKET	1
49	28-1091	RUBBER FEET	1

www.hifiengine.com

ASSEMBLY DIAGRAM

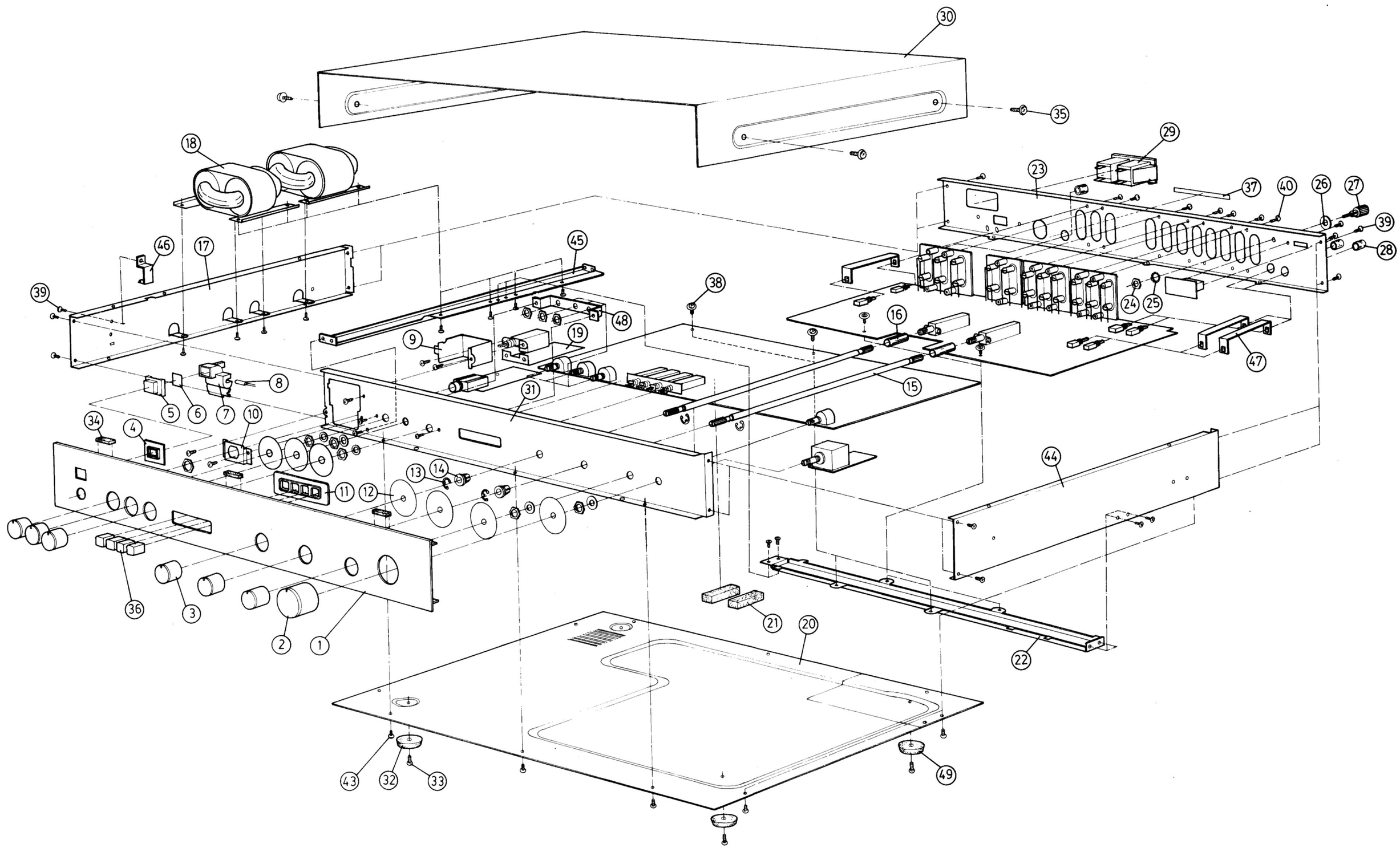

HANDLE ASSEMBLY DIAGRAM

ITEM	PART NO.	DESCRIPTION	Q'TY
1	11-8443	FRONT PANEL H	1
2	12-6011	HANDLE	2
3	12-6018	HANDLE BASE L	1
4	12-6017	HANDLE BASE R	1
5	12-7042	BUSHING A	1
6	12-7034	BUSHING	1
7	S1E04+I10SL-2	MACHINE SCREW	6

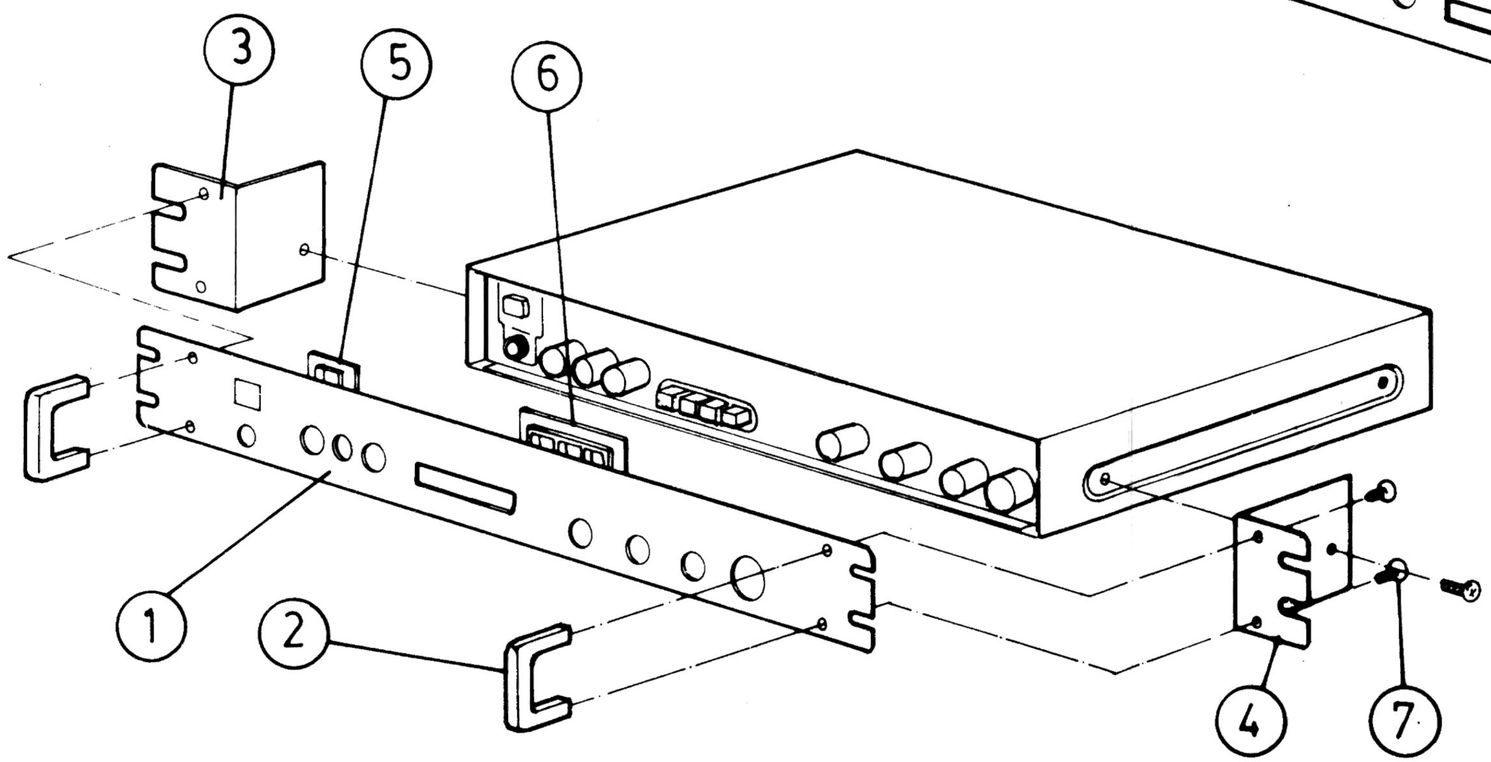

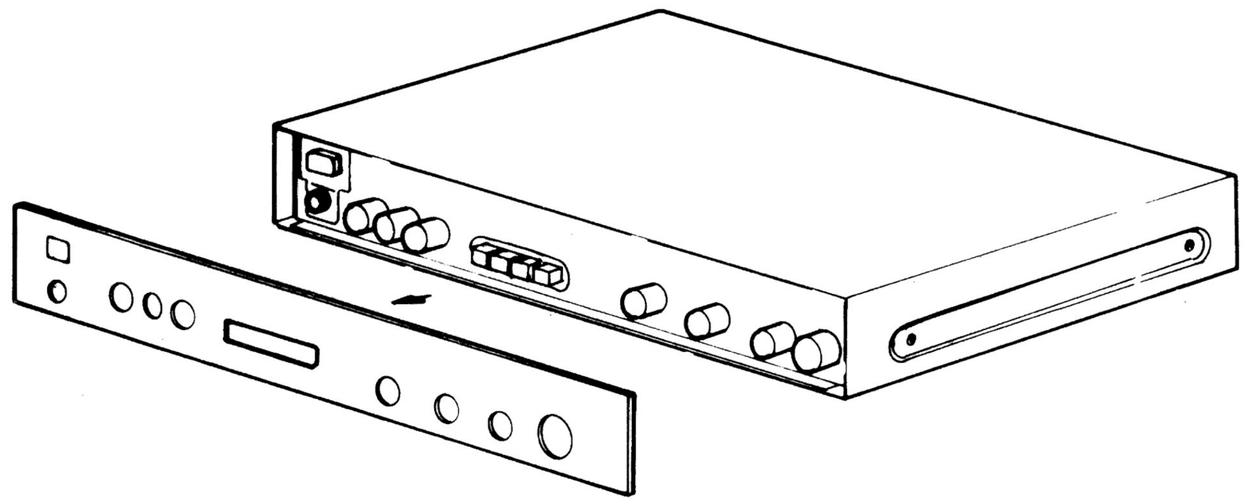

PACKING DIAGRAM

ITEM	PART NO	DESCRIPTION	Q'TY
1	34-1078	POLYLONE	2
2	26-0005*B	POLYPAPER	1
3	21-3037*A	WARRANTY CARD	1
4	21-4176	OWNER'S MANUAL	1
5	14-4331	RCA TO RCA CABLE	1
6	26-2434*A	POLYBAG MANUAL	1
7	CT-5306	INNER CARTON	1

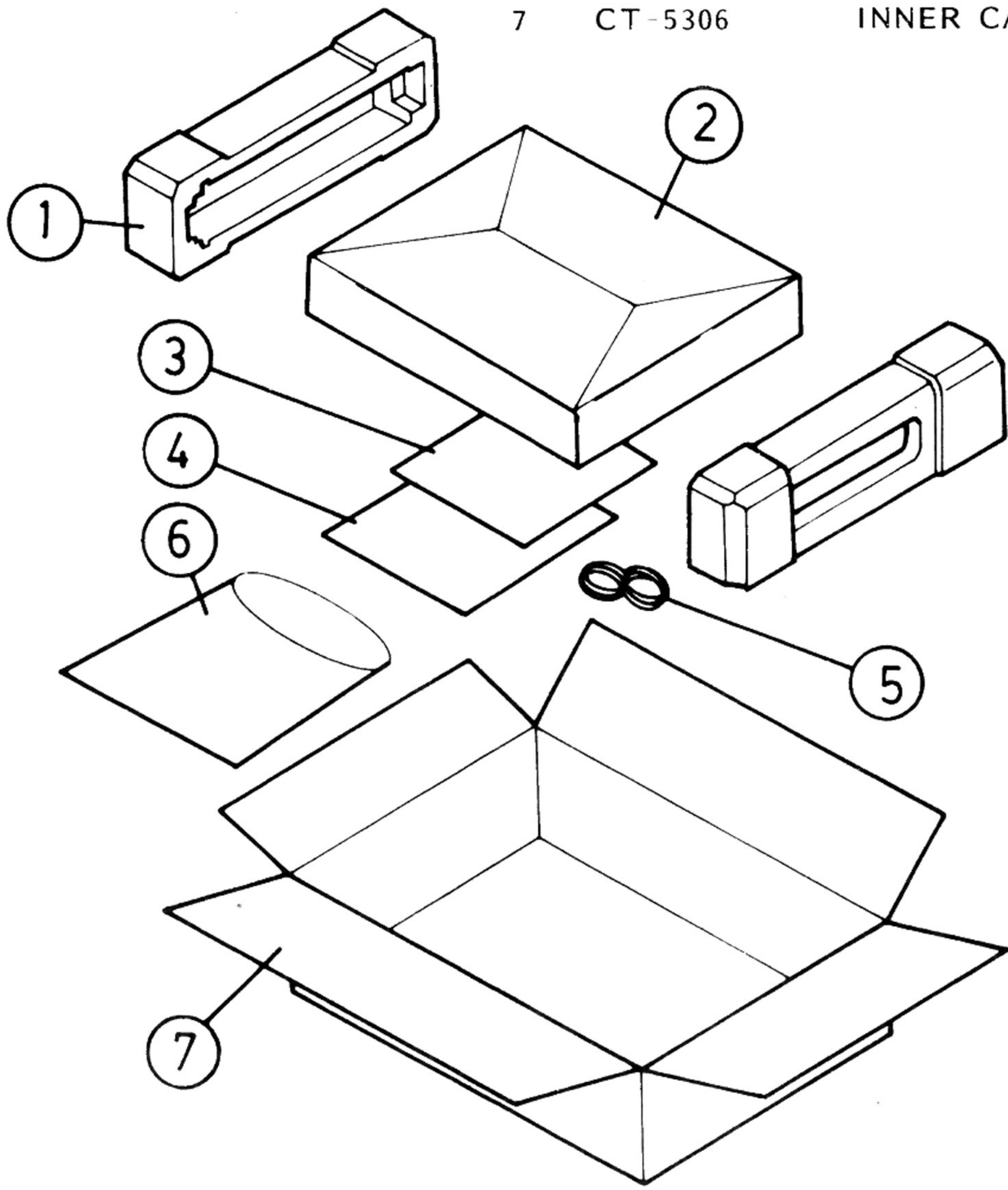

www.hifiengine.com

PROTON

FULET ELECTRONIC INDUSTRIAL CO., LTD.
63, Sec. 1, San Ming Rd., Panchiao, Taipei Hsien,
Taiwan, R.O.C.
Tel: (02)9625135-40

PROTON CORPORATION
737 West Artesia Blvd Compton CA. 90220
U.S.A.
Tel: (213) 638-5151

Printed in Taiwan

www.hifiengine.com