THIS DOCUMENT CONTAINS PROPRIETARY INFORMATION WHICH IS THE PROPERTY OF QSC AUDIO PRODUCTS, THAT MAY NOT BE DISCLOSED, REPRODUCED OR USED WITHOUT EXPRESS WRITTEN CONSENT FROM QSC AUDIO PRODUCTS.

SCHEMATIC DIAGRAM, DISPLAY BOARD, CX6T (SHOWN)
FOR FAB SEE PC-000944-00 REV B
DOC NO. SH-000944-XX REV B

REVISIONS				
ZONE	REV	DESCRIPTION	DATE	APPROVED
	1	PROTOTYPE RELEASE 8-14-95 AC		
	2	PROTOTYPE RELEASE 9-12-95 AC		
	3	PROTOTYPE RELEASE 10-4-95 AC		
	A	PROD. RELEASE PER ECO 2875 AC (EFF. 12-1-95)	11-30-95	TS
	B	REVISE PER ECO XXXX AC (EFF.)		

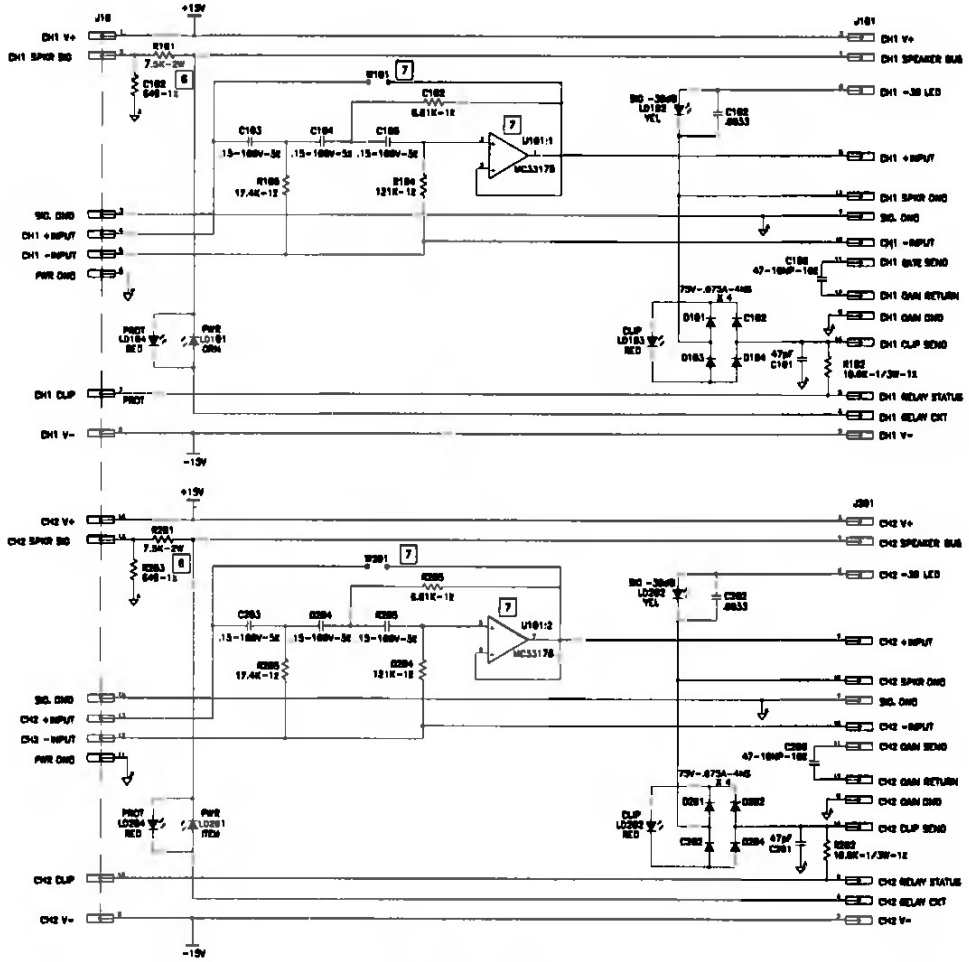

TABULATION BLOCK		
DASH NO.	MODEL	USED ON
-00	CX6	WP-000944-00
-01	CX6T	WP-000944-01
-02	CX12	WP-000944-02
-03	CX12T	WP-000944-03

7 CONFIGURATION OF JUMPERS AND OPAMPS TO MODELS:

MODEL	ASSEMBLY NO.	W101/201	U101:1/2
CX6	WP-000944-00	IN PLACE	REMOVED
CX6T	WP-000944-01	CUT/REMOVED	INSTALLED
CX12	WP-000944-02	IN PLACE	REMOVED
CX12T	WP-000944-03	CUT/REMOVED	INSTALLED

6 FOR CX12: R103/203 VALUE IS 487-1%
R101/201 VALUE IS 8.2K-2W

5. PARTS IN COMMON TO BOTH CHANNELS NUMBERED 1-99.
4. CH 2 COMPONENTS NUMBERED 201-299
3. CH 1 COMPONENTS NUMBERED 101-199.
2. ALL RESISTORS IN OHMS 1/4 WATT, ±5%
1. ALL CAPACITORS IN uF, 25V.

NOTES: UNLESS OTHERWISE SPECIFIED

WP-000944-03	CX12T
WP-000944-02	CX12
WP-000944-01	CX6T
WP-000944-00	CX6
ASSY ASSY	USED ON

APPLICATION

QTY	ITEM NO.	PART NO.	DESCRIPTION	VENDOR

PARTS LIST

UNLESS OTHERWISE SPECIFIED DIMENSIONS ARE IN INCHES. DIMENSIONS FILE MKD Y14.5-1982
TOLERANCES ARE: DECIMALS .XX ± .XXX ± ANGLES ±
SURFACE CODES .XXX R CHS
MATERIAL
FINISH
DO NOT SCALE DRAWING

CONTRACT NO

APPROVALS	DATE
DRAWN Robert Barker	7-26-95
CHECKED W. RULAND	11-29-95
ISSUED Tim SHOOK	11-29-95

CAD MOD FILE NO. SH000944-B.DCH

QSC AUDIO PRODUCTS, INC.
COSTA MESA, CALIFORNIA

SCHEMATIC DIAGRAM
DISPLAY BOARD CX6/CX12, CX6T/CX12T

SIZE D | FSCM NO. | DWG NO. SH-000944-XX | REV B
SCALE | CAD FILE NO. | SHEET 1 OF 1

SH-000944-XX DWG NO. | 1 SH | B REV

SCHEMATIC DIAGRAM, C

Main PCB Assy

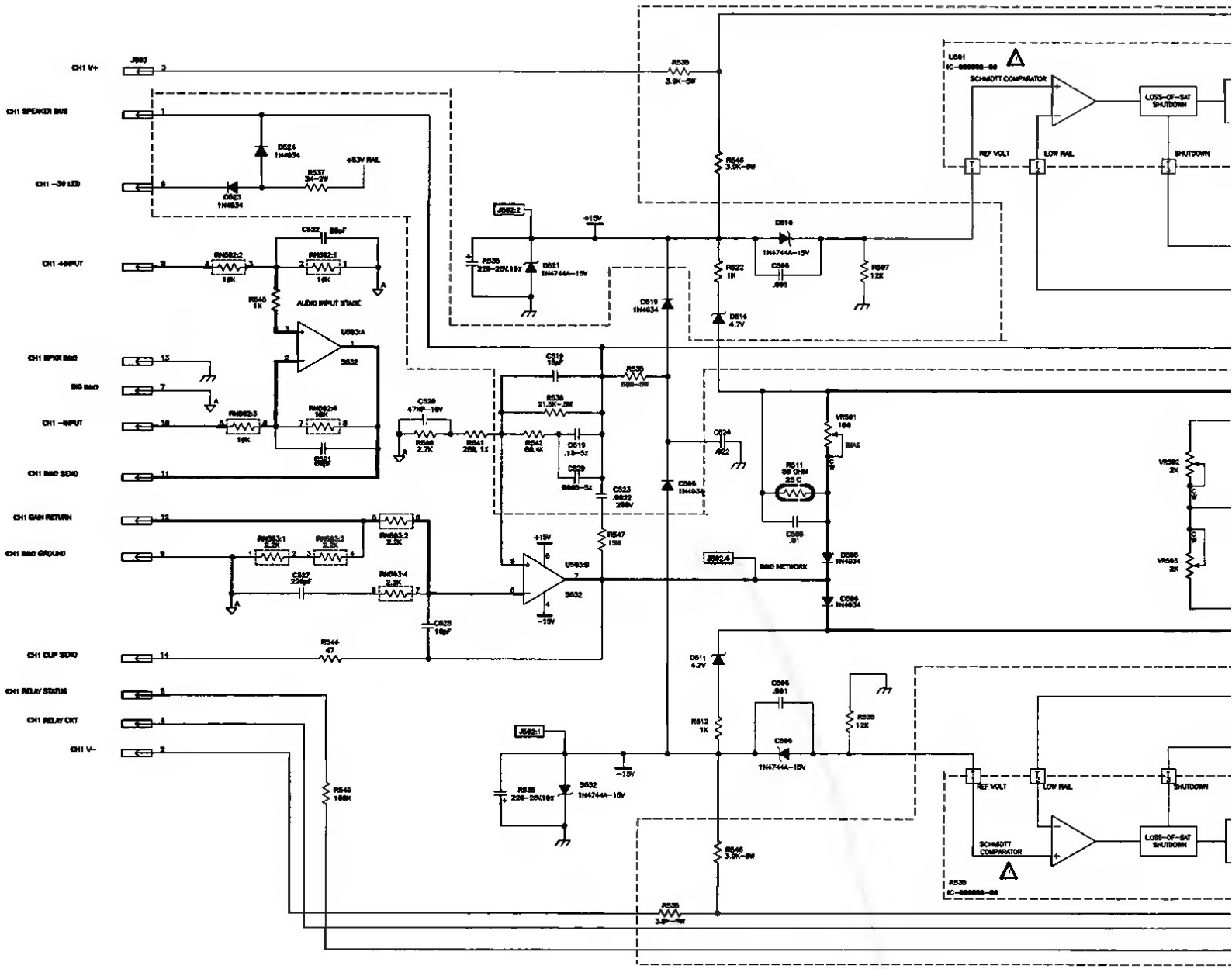

10. DIODES D525, 625 ARE USED ON MPX 300 MAIN AMP PCB ASSY., P/N WP-000113-00, AND APPEAR ON PC-001510-00.
9. PARTS ENCLOSED WITHIN DOTTED OUTLINE ———— HAVE VOLTAGES GREATER THAN 42V
8. PARTS MARKED WITH TRIANGLE ⚠ MUST BE REPLACED WITH EXACT TYPE ONLY.
7. BRIDGE RECTIFIER BR 503, 603, 1.5A, 100V.
6. ZENERS D517, 617, MARKED 7.5V, LOW LEAKAGE, P/N QD-0007.5-ZT
5. Q 503, 504 603, 604 ARE SWITCHING FETS, P/N QD-000031-QD, 125W, 00V MINIMUM, ON-RESISTANCE 0.030 OHMS MAX.
4. R516, 616 IS POSITIVE TEMPERATURE COEFFICIENT RESISTOR, MTD TO HEAT SINK. RESISTANCE 100 OHM COLD, RISING AT 00 C. P/N RE-000000-PT
3. ALL CAPACITORS 100V UNLESS OTHERWISE NOTED. TOLERANCE 20% FOR ELECTROLYTIC TYPES, 10% ON OTHER TYPES.
2. ALL RESISTORS 1/4-WATT, 5% UNLESS NOTED.
1. CH2 IS IDENTICAL TO CH1, EXCEPT PART NUMBER SEQUENCE R 001, 602 ETC.

NOTES UNLESS OTHERWISE SPECIFIED

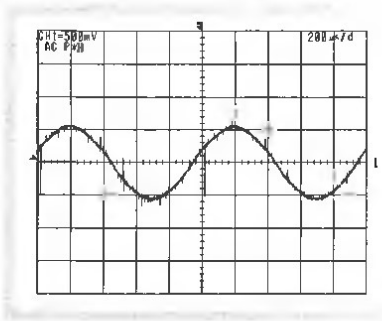

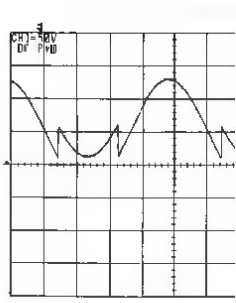

C DIAGRAM, CX12 / CX12T
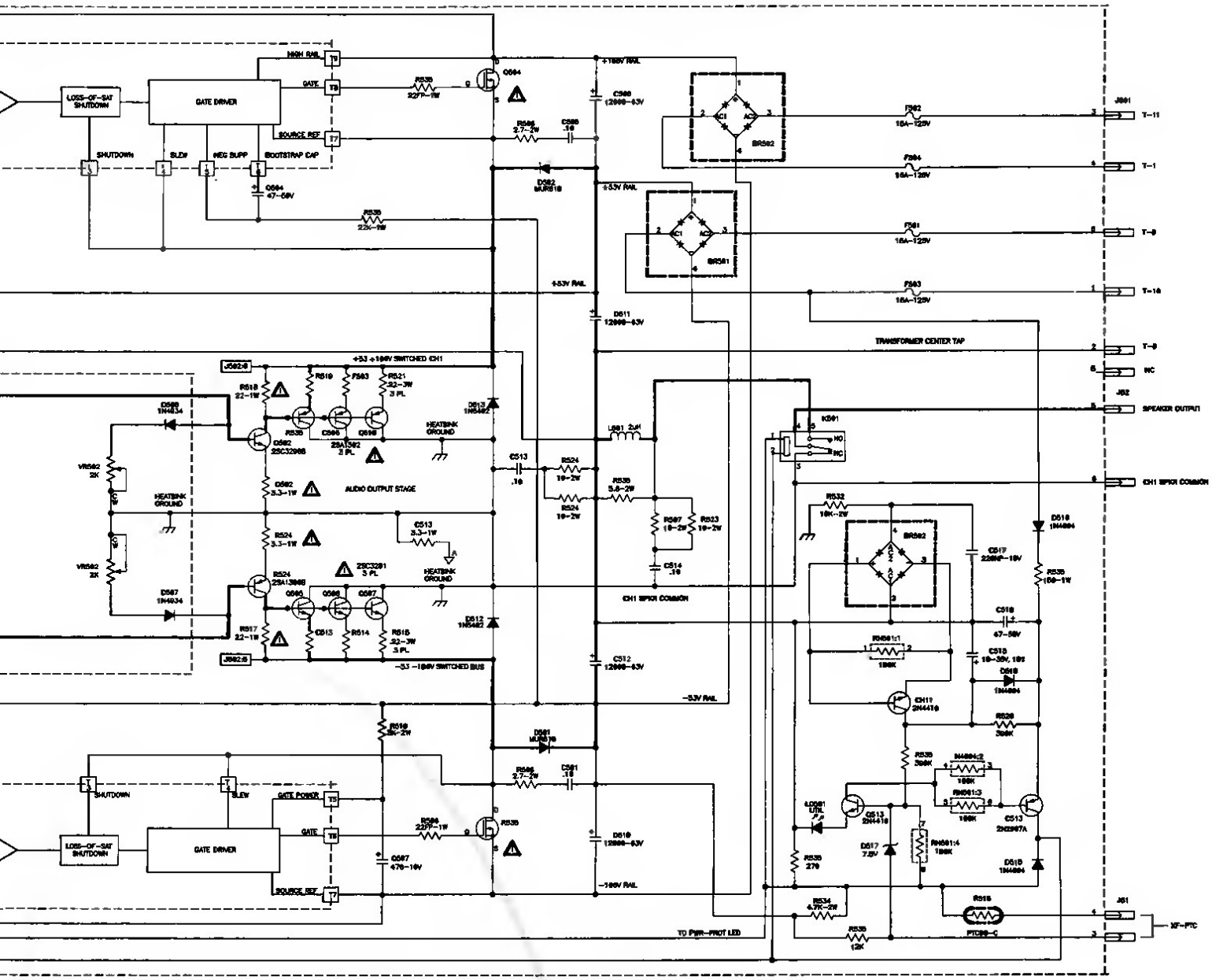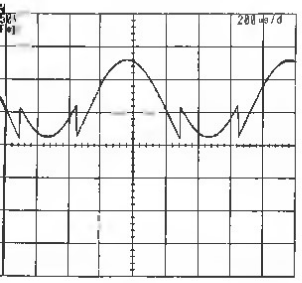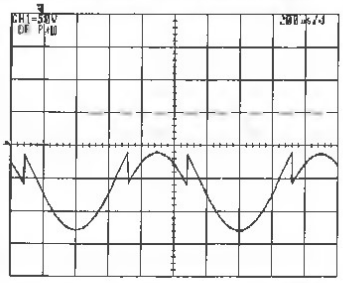
Main PCB Assy