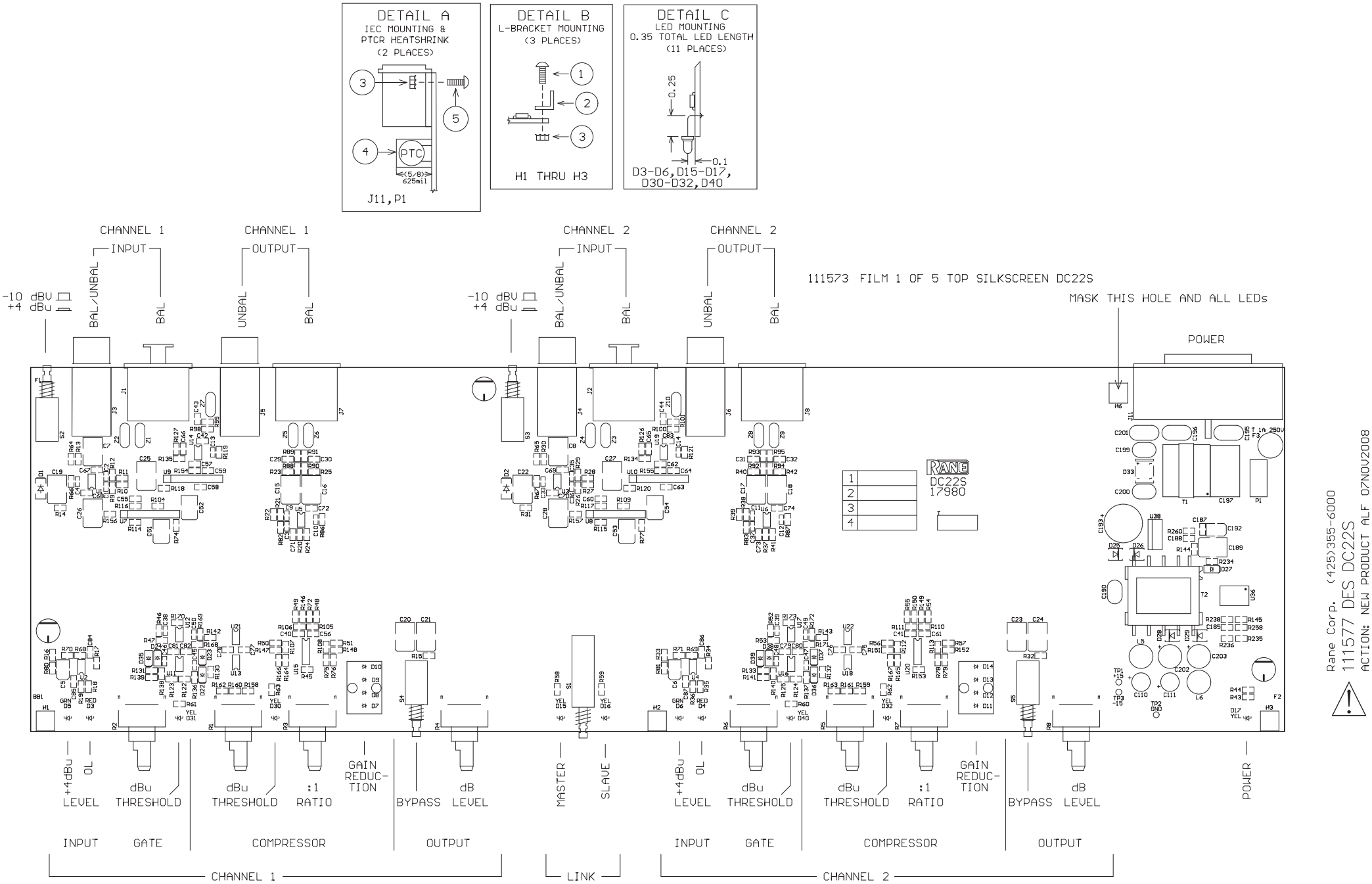

Rane Corp. (425)355-6000
111577 DES DC22S
ACTION: NEW PRODUCT ALF 07NOV2008

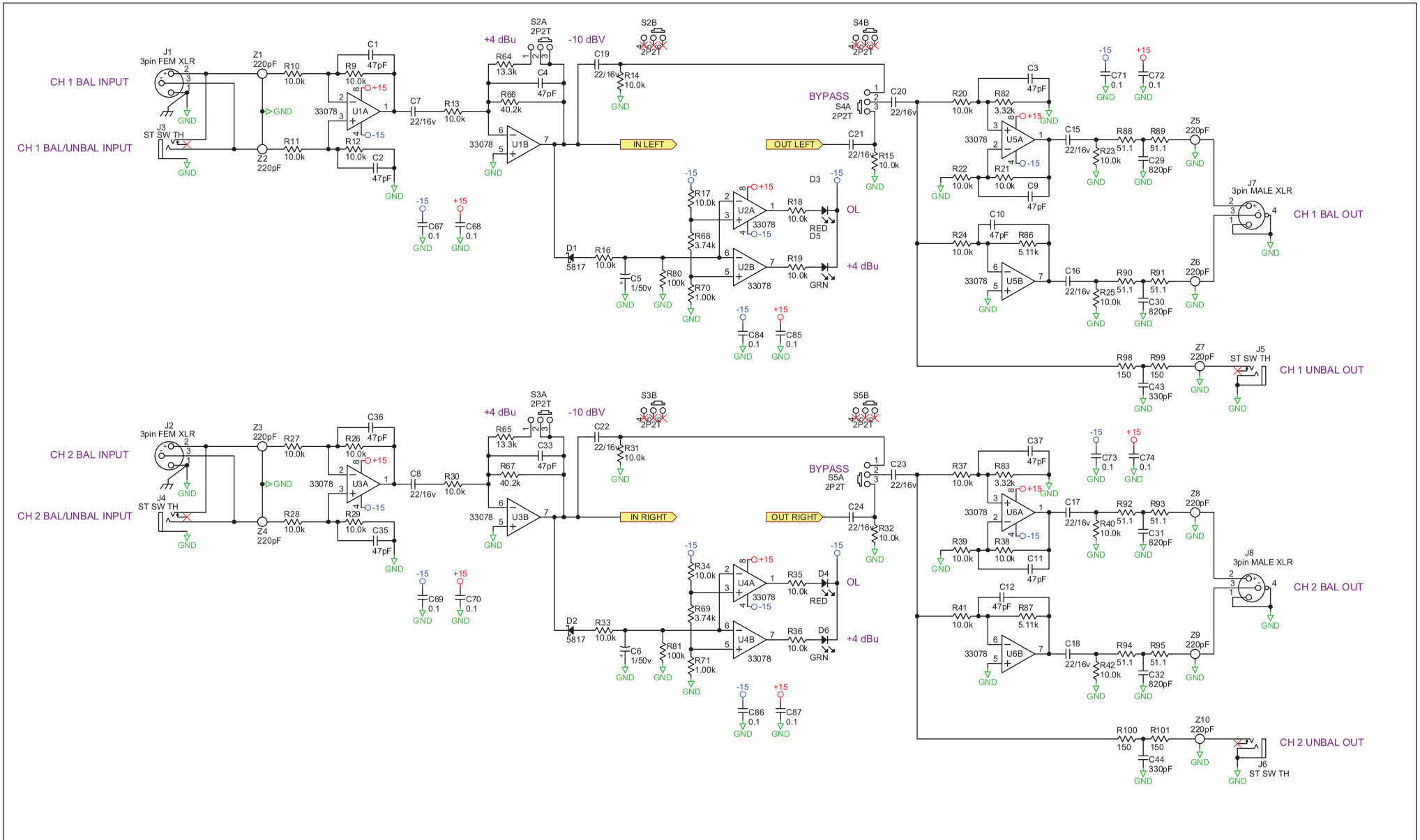

10/23/2008
C:\CAD Projects\DC22S\DC22S-1.SCHDOC

ACTION:	RANE 10802 47th Avenue West Mukilteo WA 98275-5098	IN/OUT DC22S	
DRAWN BY: RJ / CHECKED BY: RWJ		SHEET: 1 of 3	111576

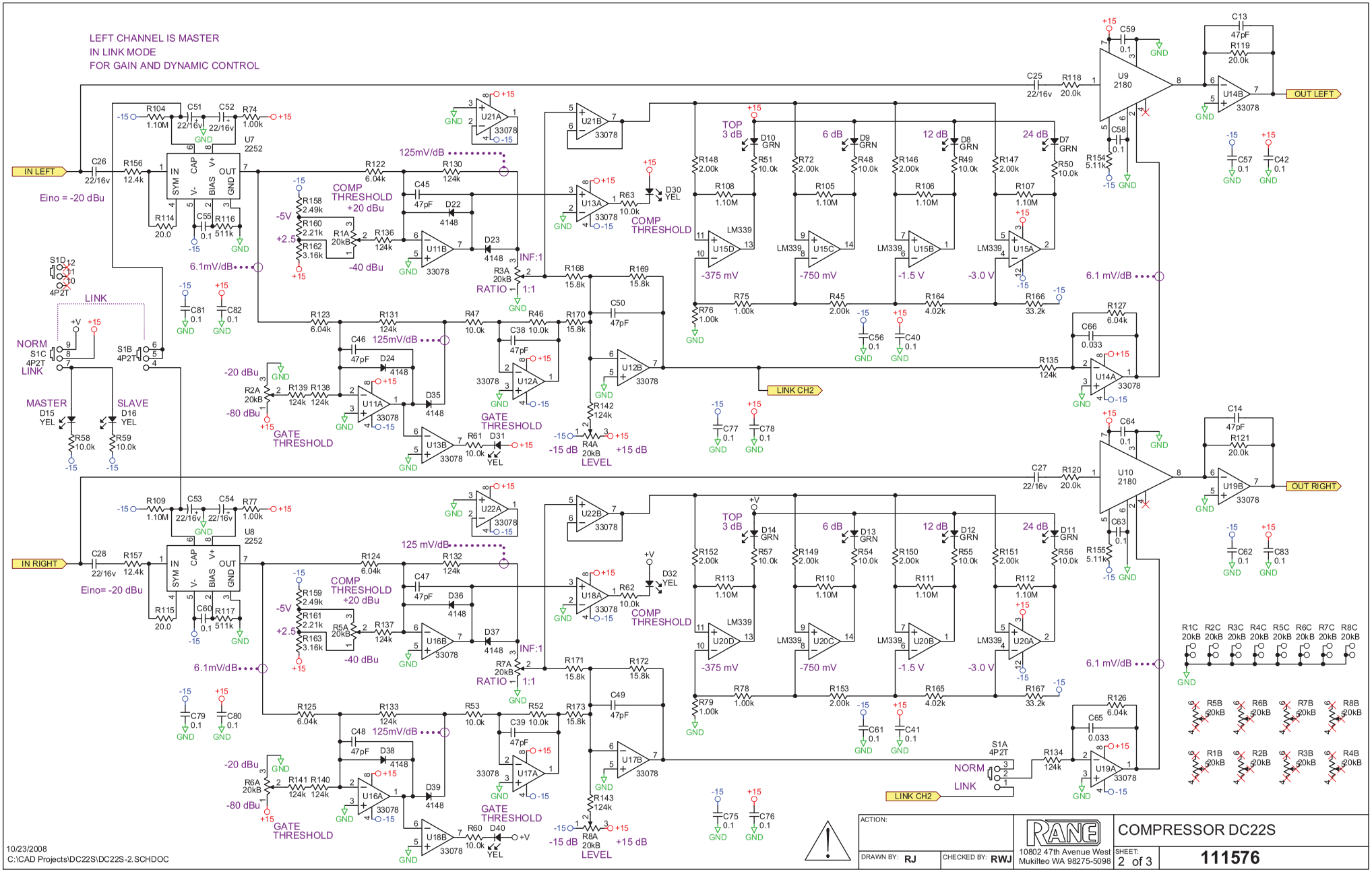
LEFT CHANNEL IS MASTER
IN LINK MODE
FOR GAIN AND DYNAMIC CONTROL
IN LEFT
Eino = -20 dBu
IN RIGHT
Eino= -20 dBu
OUT LEFT
OUT RIGHT
LINK CH2
NORM
LINK
MASTER
SLAVE
COMP THRESHOLD +20 dBu
COMP THRESHOLD
GATE THRESHOLD
LEVEL
RATIO
INF:1
1:1
-20 dBu
-80 dBu
-40 dBu
-15 dB
+15 dB
125mV/dB
6.1mV/dB
TOP 3 dB
6 dB
12 dB
24 dB
-375 mV
-750 mV
-1.5 V
-3.0 V
U7 2252
U8 2252
U9 2180
U10 2180
LM339
33078
10/23/2008
C:\CAD Projects\DC22S\DC22S-2.SCHDOC
ACTION:
DRAWN BY: RJ
CHECKED BY: RWJ
RANE
10802 47th Avenue West
Mukilteo WA 98275-5098
COMPRESSOR DC22S
SHEET: 2 of 3
111576

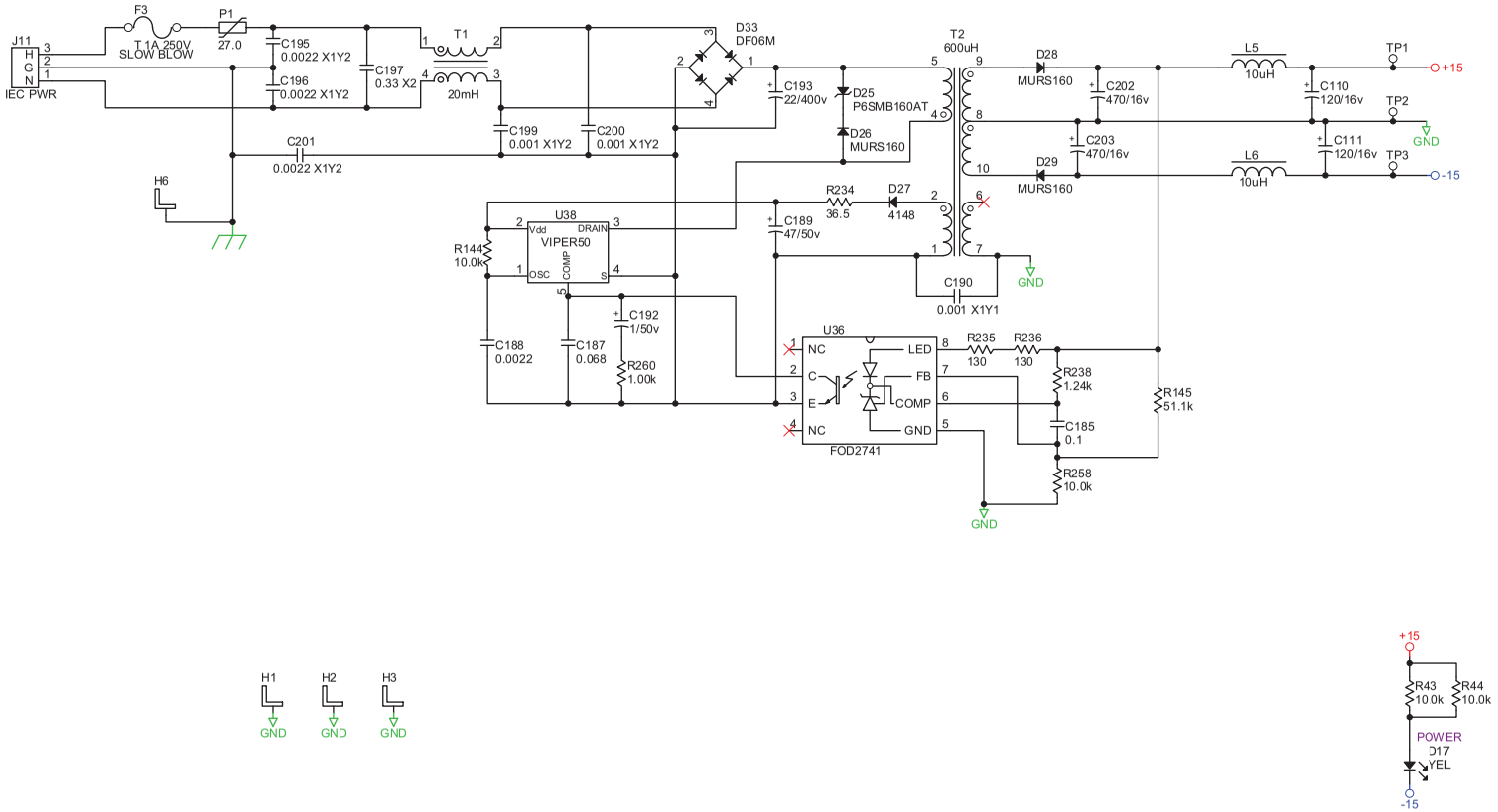

10/23/2008
C:\CAD Projects\DC22S\DC22S-3.SCHDOC

ACTION:	RANE 10802 47th Avenue West Mukilteo WA 98275-5098	POWER SUPPLY DC22S	
DRAWN BY: ALF / CHECKED BY:		SHEET: 3 of 3	111576