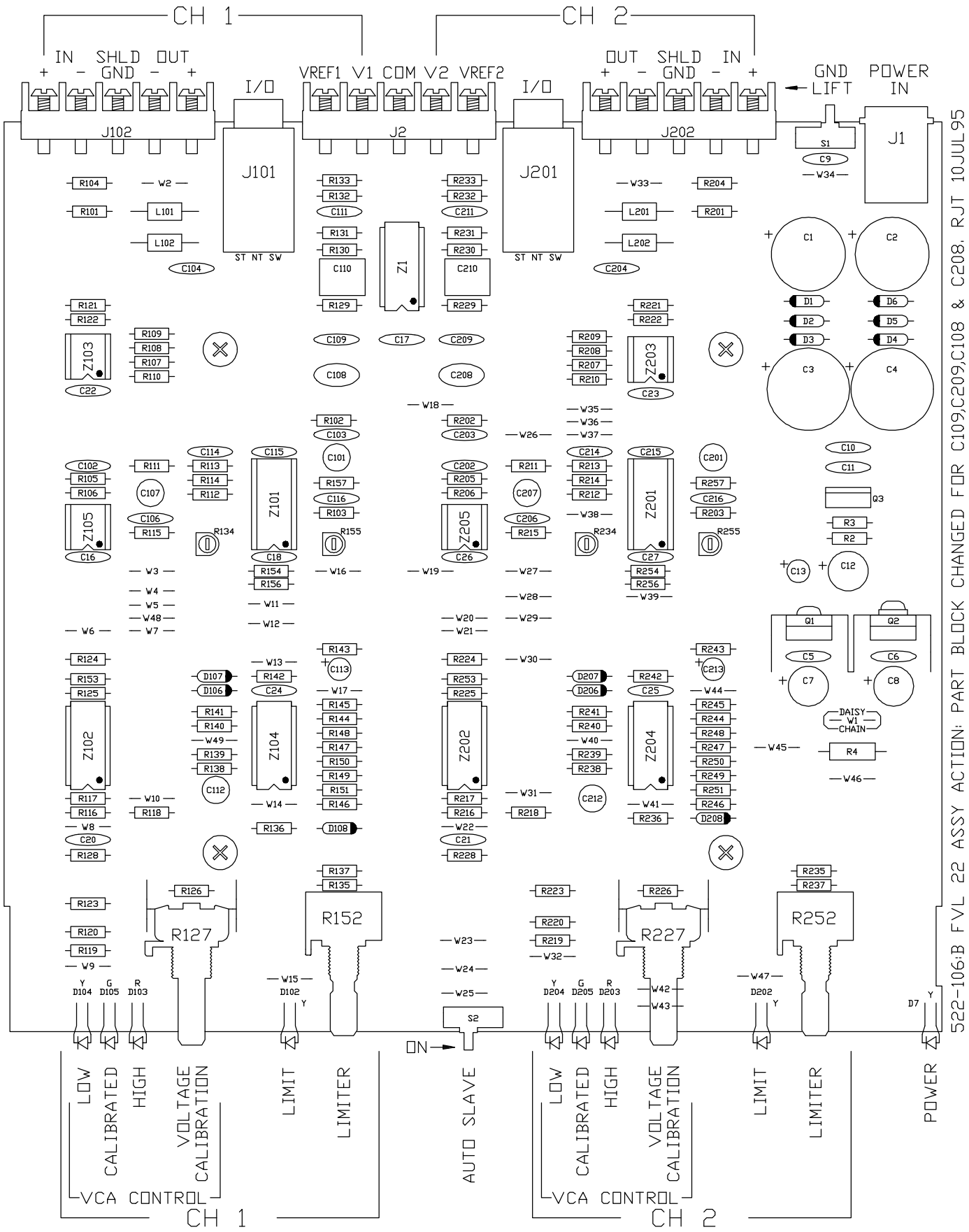
CH 1
CH 2
IN SHLD OUT
+ - GND - +
VREF1 V1 COM V2 VREF2
OUT SHLD IN
+ - GND - +
GND LIFT
POWER IN
I/O
I/O
J102
J2
J202
J101
J201
J1
S1
C9
W34
R104
W2
R101
L101
L102
C104
R133
R132
C111
R131
R130
C110
R129
Z1
R233
R232
C211
R231
R230
C210
R229
W33
R204
L201
R201
L202
C204
ST NT SW
ST NT SW
C1
C2
C3
C4
D1
D2
D3
D6
D5
D4
R121
R122
Z103
C22
R109
R108
R107
R110
C109
C17
C209
C108
C208
R209
R208
R207
R210
R221
R222
Z203
C23
W18
R102
C103
C101
R157
C116
R103
R202
C203
C202
R205
R206
W26
R211
C207
C206
R215
W35
W36
W37
C214
R213
R214
R212
W38
R234
C215
Z201
C201
R257
C216
R203
R255
C10
C11
Q3
R3
R2
C13
C12
C102
R105
R106
Z105
C16
R111
C107
C106
R115
C114
R113
R114
R112
R134
Z101
C115
C18
R154
R156
R155
W16
C26
Z205
W19
C27
R254
R256
W39
W3
W4
W5
W48
W7
W6
W11
W12
W20
W21
W27
W28
W29
Q1
Q2
C5
C6
C7
C8
R124
R153
R125
Z102
R117
R116
W8
C20
R128
W10
R118
D107
D106
R141
R140
W49
R139
R138
C112
Z104
W13
R142
C24
W14
R136
R143
C113
W17
R145
R144
R148
R147
R150
R149
R151
R146
D108
R224
R253
R225
Z202
R217
R216
W22
C21
R228
W30
W31
R218
D207
D206
R241
R240
W40
R239
R238
C212
R242
C25
Z204
W41
R236
R243
C213
W44
R245
R244
R248
R247
R250
R249
R251
R246
D208
DAISY
W1
CHAIN
W45
R4
W46
R123
R120
R119
W9
R126
R127
R137
R135
R152
W15
D102
Y
W23
W24
W25
S2
ON
R223
R220
R219
W32
R226
R227
Y
D104
G
D105
R
D103
Y
D204
G
D205
R
D203
W42
W43
R235
R237
R252
W47
D202
Y
D7
Y
LOW
CALIBRATED
HIGH
VOLTAGE CALIBRATION
LIMIT
LIMITER
AUTO SLAVE
LOW
CALIBRATED
HIGH
VOLTAGE CALIBRATION
LIMIT
LIMITER
POWER
VCA CONTROL
CH 1
VCA CONTROL
CH 2
522-106:B FVL 22 ASSY ACTION: PART BLOCK CHANGED FOR C109,C209,C108 & C208. RJT 10JUL95

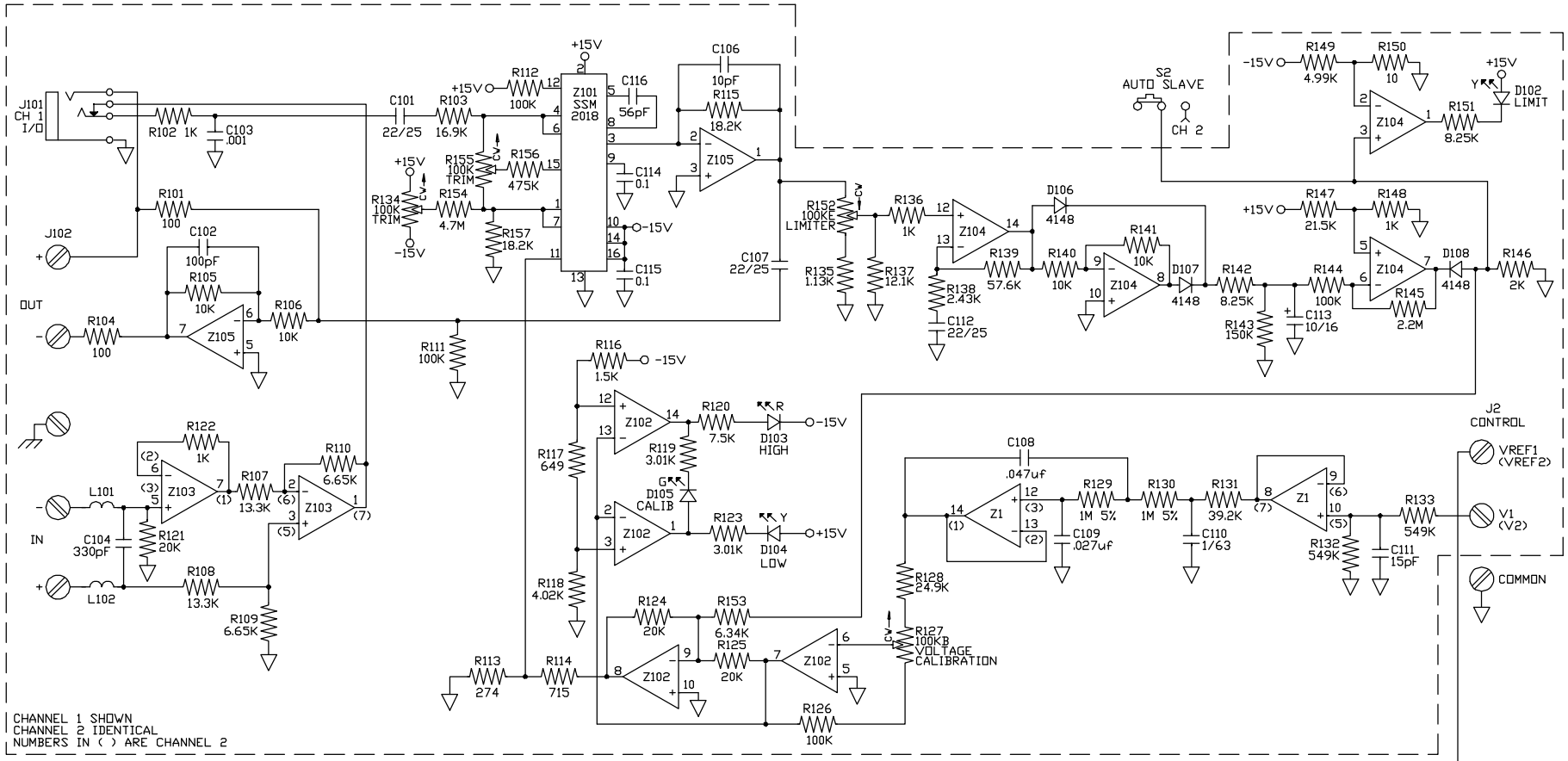

CHANNEL 1 SHOWN
CHANNEL 2 IDENTICAL
NUMBERS IN ( ) ARE CHANNEL 2

NOTES (UNLESS OTHERWISE SPECIFIED)

1. ALL RES 1/4W; 1%: METAL FILM; 5%: CARBON FILM.
2. POWER SUPPLY CONNECTIONS:

	POS SUP	NEG SUP
SING	7	4
DUAL	8	4
QUAD	4	11

3. ALL SWs SHOWN IN THEIR "OUT" OR "OFF" POSITION
4. IC'S: 5532 = Z105, Z205
   TL074 = Z102, Z202, Z1
   TL072 = Z103, Z203
   4574 = Z104, Z204
5. COMPONENT DESIGNATION SCHEME:
   X X X X
   DESIGNATOR
   CHANNEL NUMBER
   COMPONENT TYPE

EXAMPLE: R203 = RESISTOR, CHANNEL 2, NUMBER 3

POWER SUPPLY

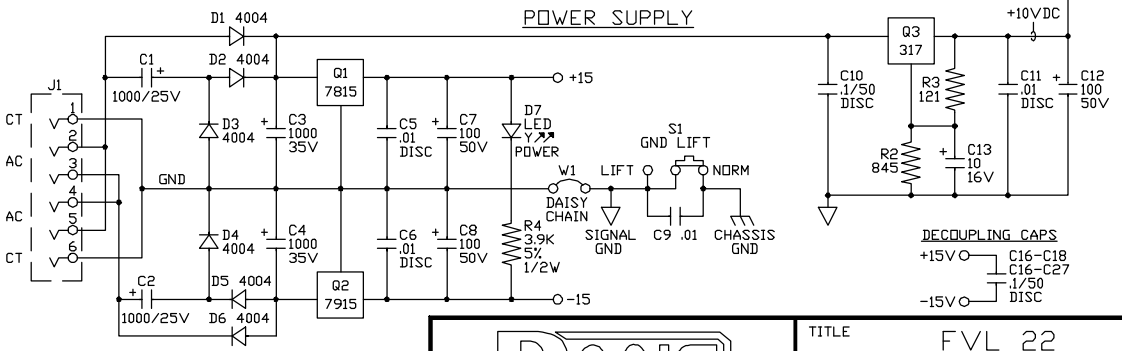

DECOUPLING CAPS
+15V — C16-C18, C16-C27 .1/50 DISC — -15V

C108 WAS 1/63,C109 WAS .1uf,R129 WAS 69.8K,R130 WAS 392K,R131 WAS 39.2K

REVISIONS	REV. C	ACTION	DATE 29JUN95	APPROVED AWC
DRAWN S HEADRICK	DATE 17APR92	CHECKED SPT	DATE 01SEP92	SHEET 1 OF 1

DO NOT SCALE DRAWING

RANE
Corp. 10802 47th Avenue West, Mukilteo
WA 98275-5098 (206) 355-6000

TITLE
FVL 22
SCHEMATIC

DRW. NO. 521-169

REV. C