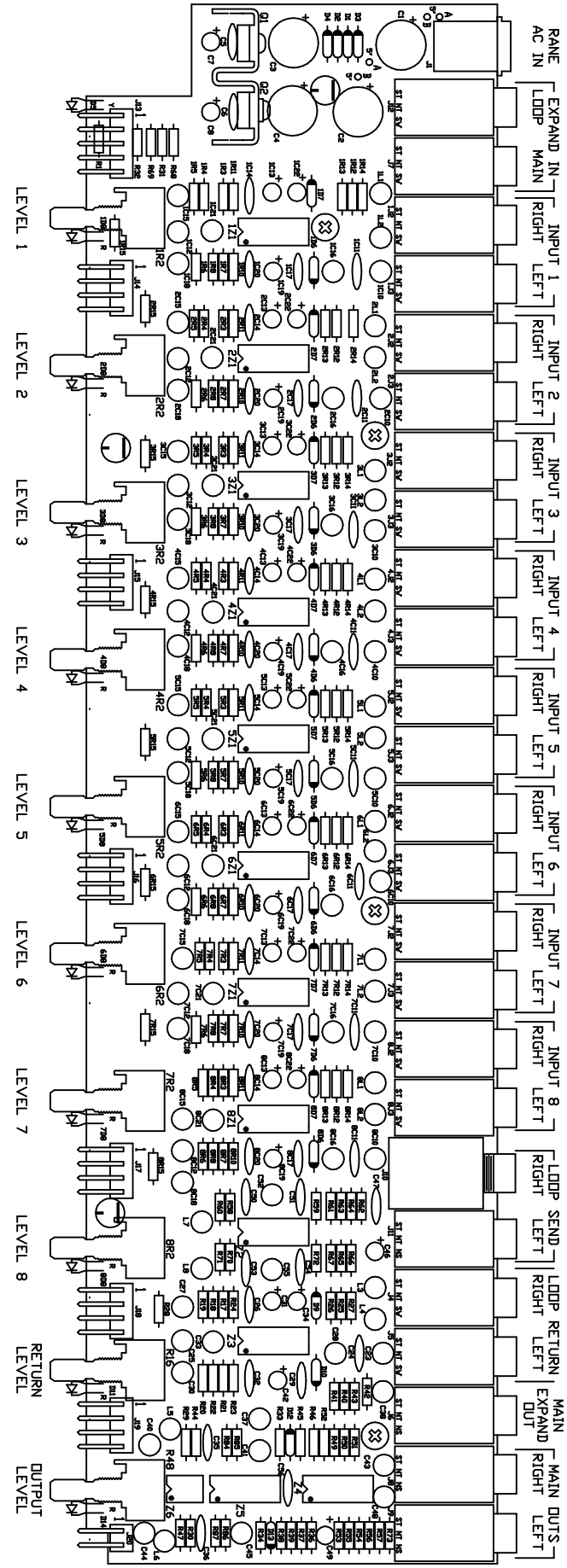

Rane Corp. (425)355-6000
104950 DES MAIN SM 82
ACTION: CHANGE GND TRACE TO TRS SLEEVES MKM 09APR01

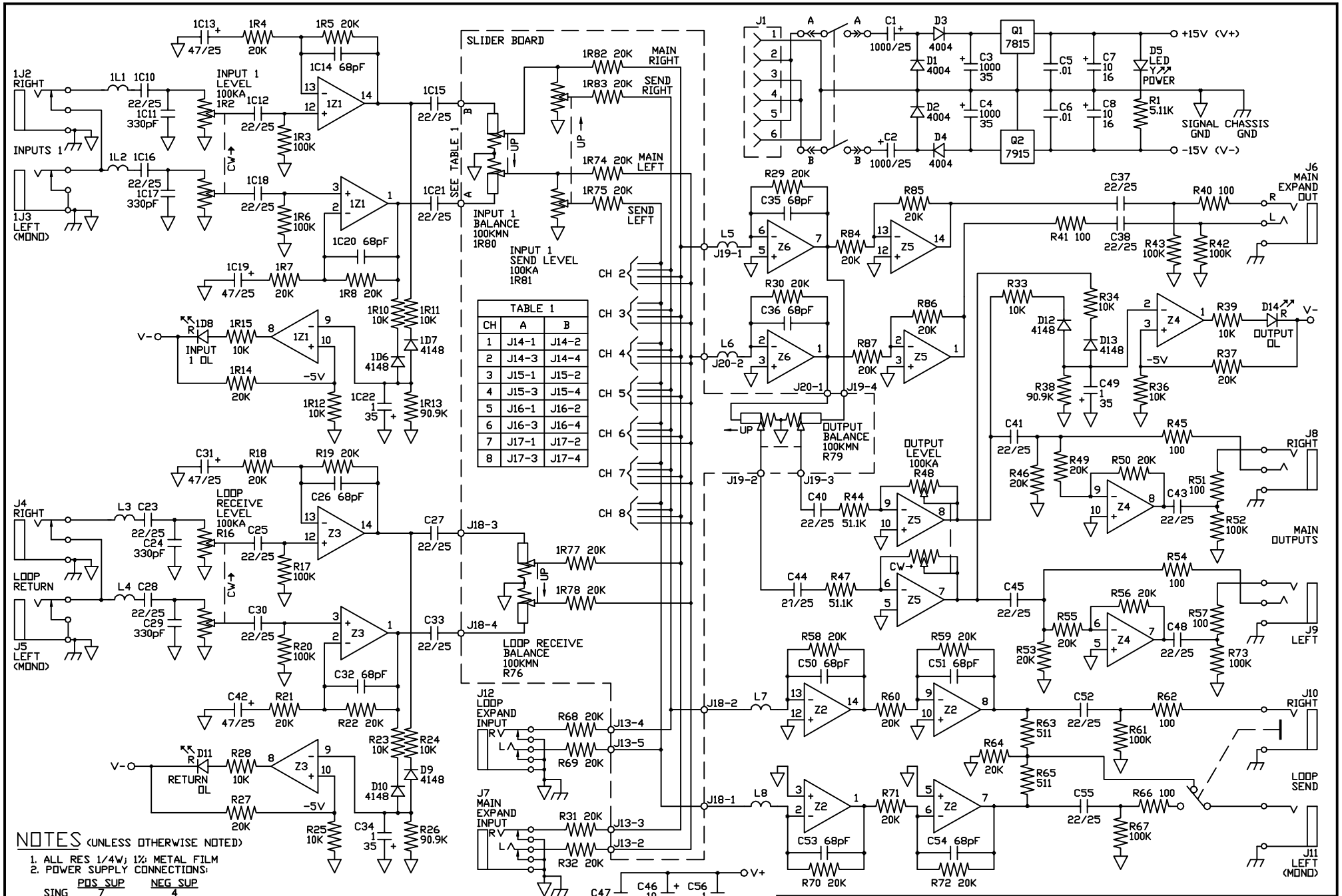

TABLE 1		
CH	A	B
1	J14-1	J14-2
2	J14-3	J14-4
3	J15-1	J15-2
4	J15-3	J15-4
5	J16-1	J16-2
6	J16-3	J16-4
7	J17-1	J17-2
8	J17-3	J17-4

NOTES (UNLESS OTHERWISE NOTED)

1. ALL RES 1/4W; 1%; METAL FILM
2. POWER SUPPLY CONNECTIONS:

	POS SUP	NEG SUP
SING	7	4
DUAL	8	4
QUAD	4	11

3. ALL SWs SHOWN IN THEIR "OUT" OR "OFF" POSITION
4. ALL BEADS 3 TURN
5. Z6 IS 4570 ALL OTHER IC'S ARE 2059'S
6. PREFIX 'N' CHANNEL 'N'
7. PARTS COMMON TO ALL CHANNELS HAVE NO PREFIX

ACTION: 2059 WAS OP11, NEW DOC#		REVISED: FJ	APPROVED:	DATE: 17SEP98
DRAWN: SPT DATE: 8FEB89	CHECKED: AWC DATE: 9FEB98	SHEET: 1 OF 1	DO NOT SCALE DRAWING	

RANE
Corp. 10802 47th Avenue West, Mukilteo
WA 98275-5098 (425) 355-6000

TITLE: SCHEM: SM 82

DOC. NO. 102299