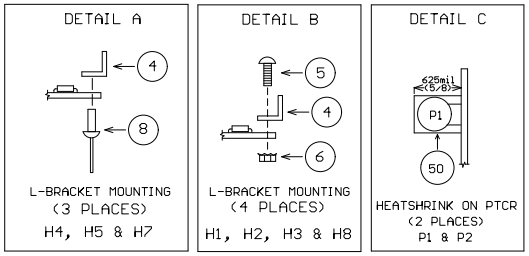

110671 FILM 1 OF 6 TOP SILKSCREEN I.D. IO/TONE XP2016S

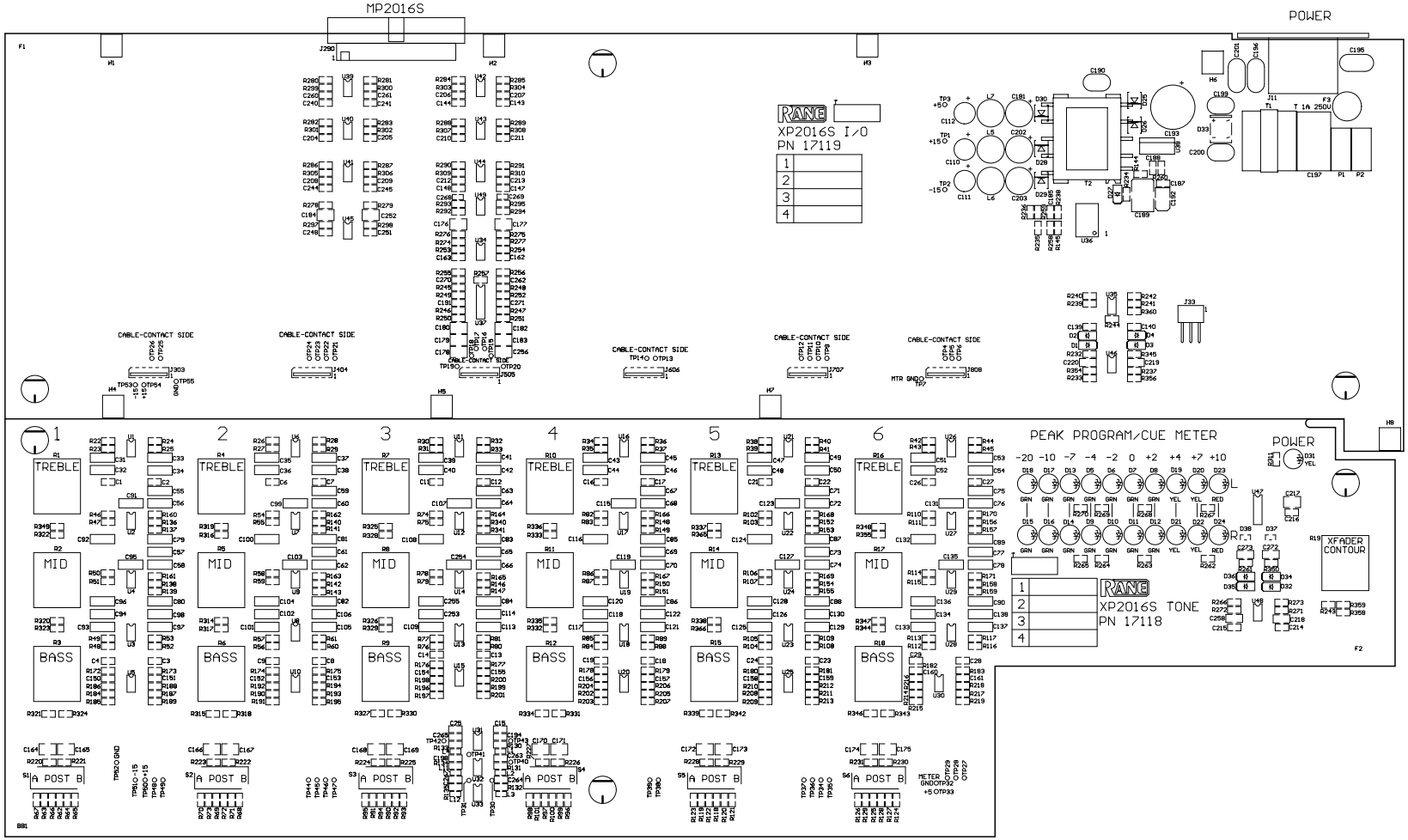

Rane Corp. (425)355-6000
110443 DES IO/TONE XP2016S
ACTION: NEW PRODUCT SKH 14JUN07

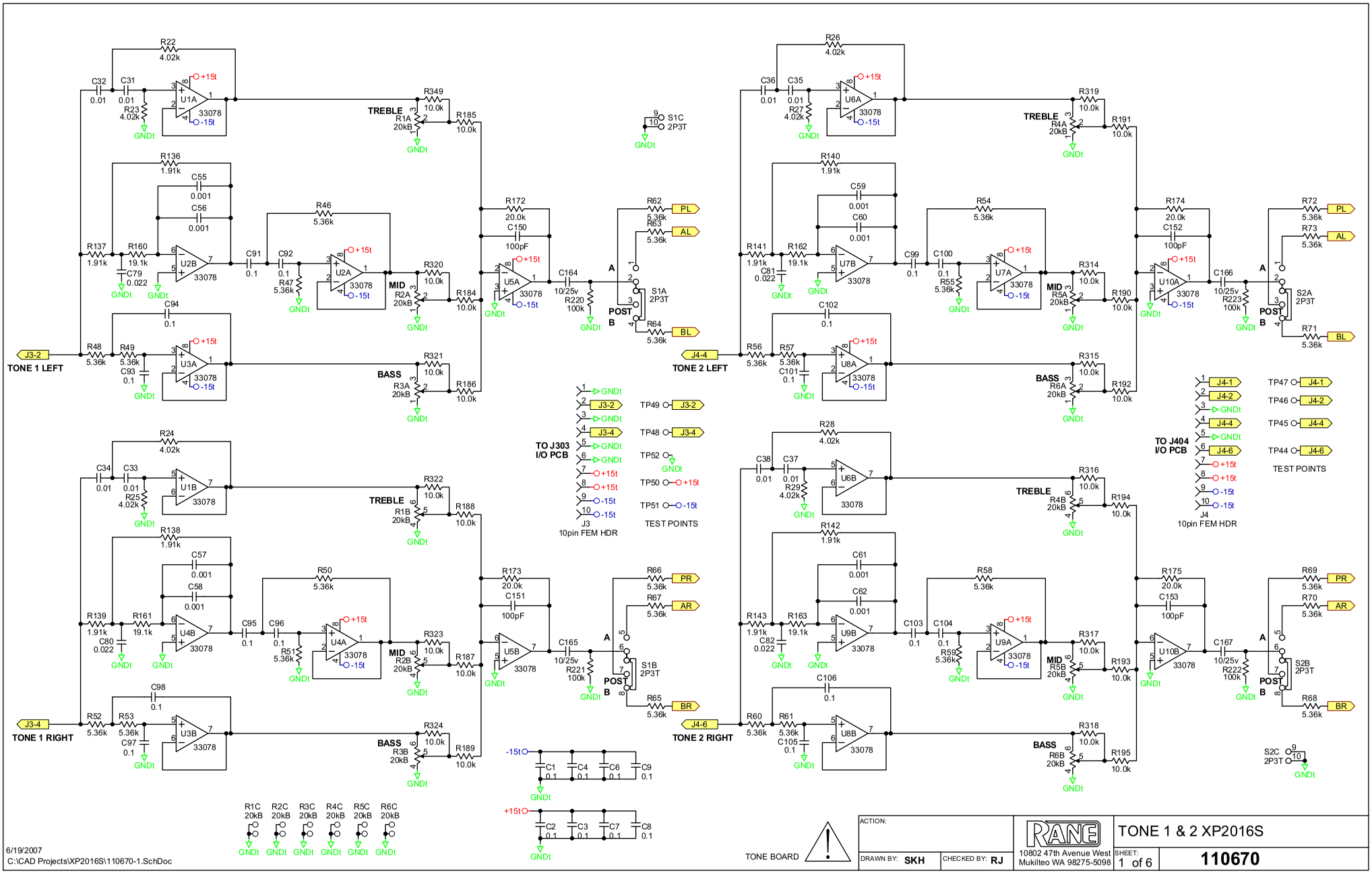
TONE 1 LEFT
J3-2
TONE 1 RIGHT
J3-4
TONE 2 LEFT
J4-4
TONE 2 RIGHT
J4-6
TREBLE
MID
BASS
POST
TO J303 I/O PCB
J3 10pin FEM HDR
TO J404 I/O PCB
J4 10pin FEM HDR
TEST POINTS
TONE BOARD
RANE
10802 47th Avenue West
Mukilteo WA 98275-5098
TONE 1 & 2 XP2016S
110670
DRAWN BY: SKH
CHECKED BY: RJ
SHEET: 1 of 6
6/19/2007
C:\CAD Projects\XP2016S\110670-1.SchDoc

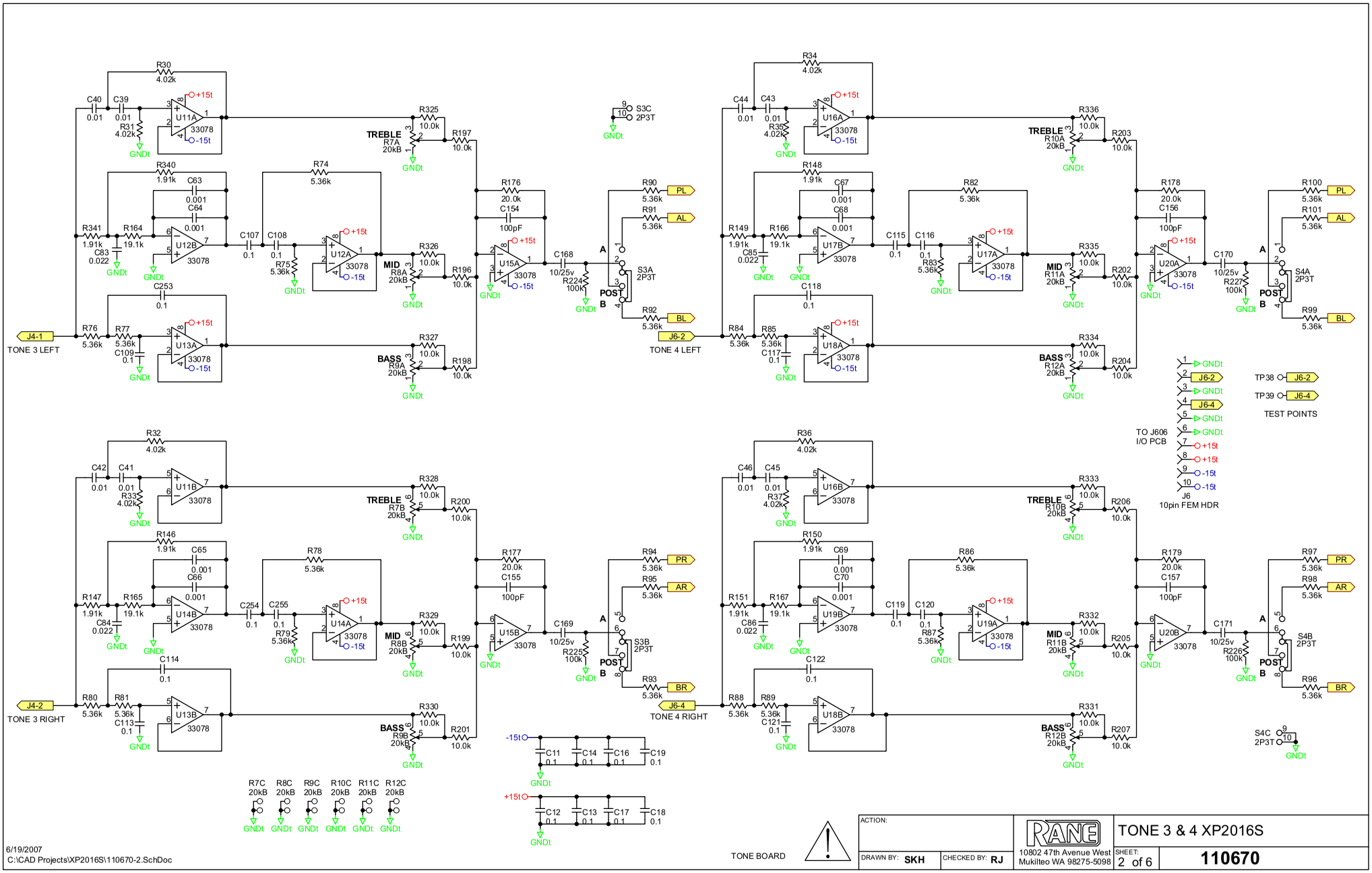

6/19/2007
C:\CAD Projects\XP2016S\110670-2.SchDoc

ACTION:	RANE 10802 47th Avenue West Mukilteo WA 98275-5098	TONE 3 & 4 XP2016S	
DRAWN BY: SKH	CHECKED BY: RJ	SHEET: 2 of 6	110670

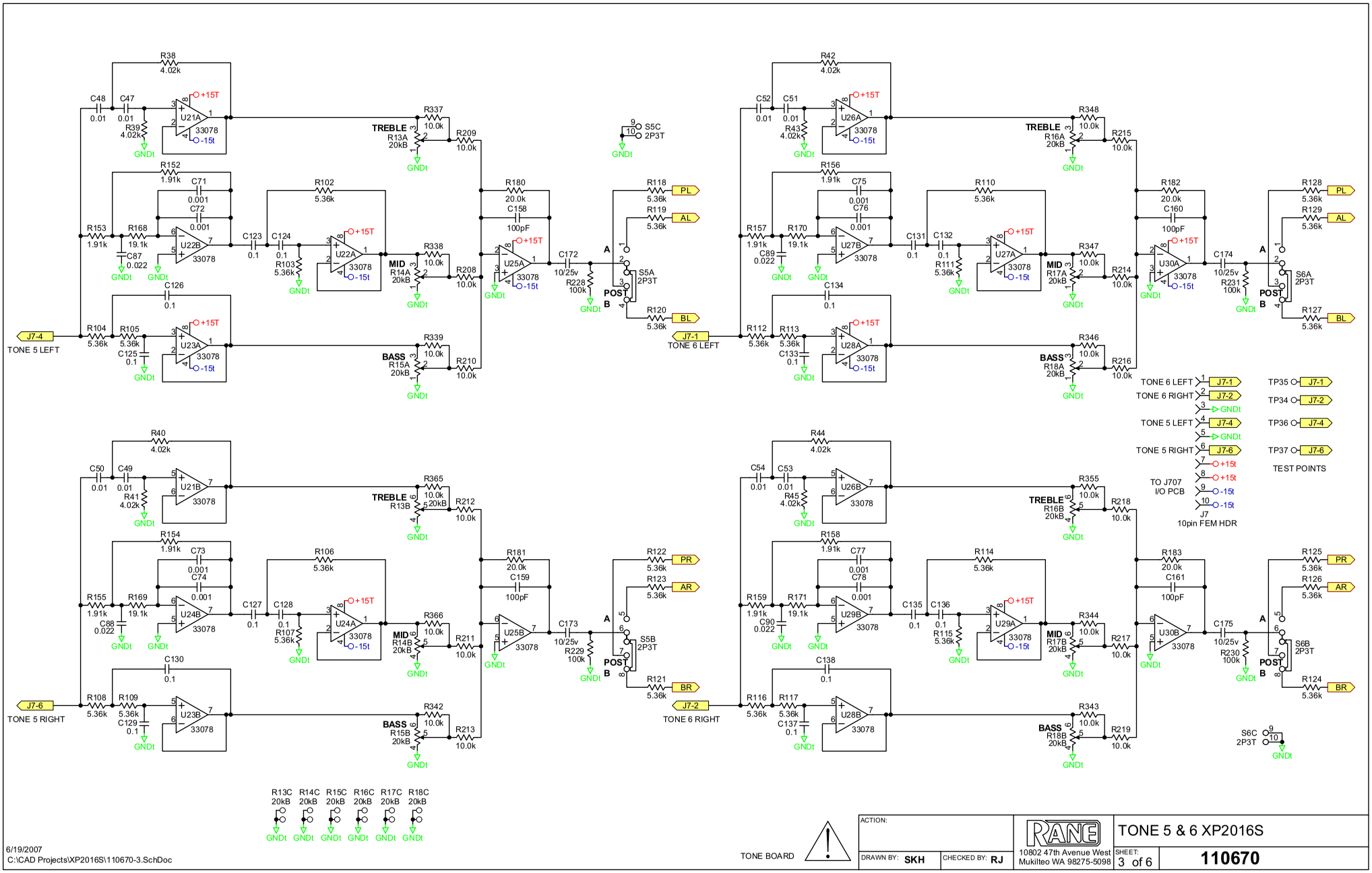

ACTION:		RANE	TONE 5 & 6 XP2016S
DRAWN BY: SKH	CHECKED BY: RJ	10802 47th Avenue West Mukilteo WA 98275-5098	SHEET: 3 of 6 — 110670

6/19/2007
C:\CAD Projects\XP2016S\110670-3.SchDoc

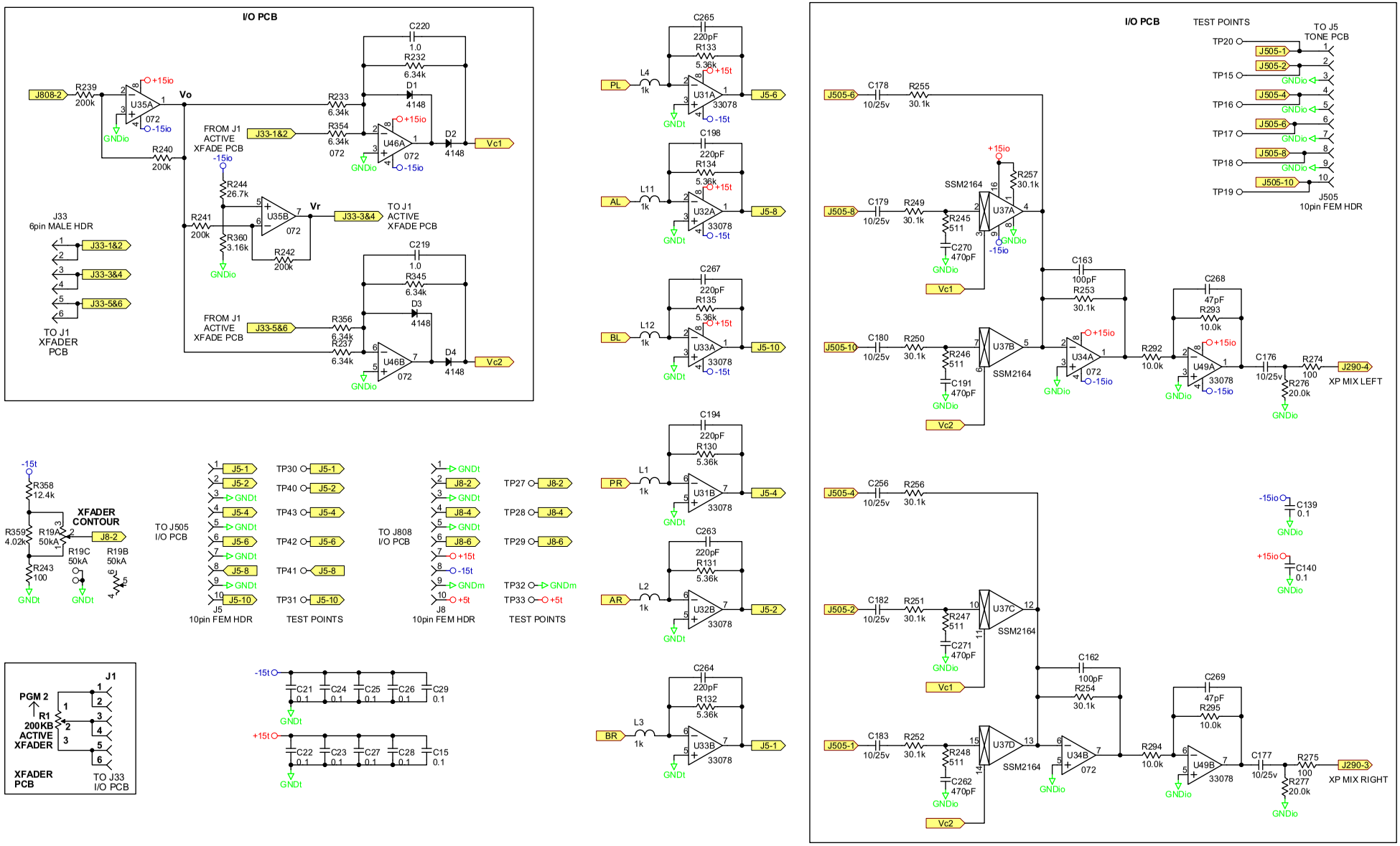

6/19/2007
C:\CAD Projects\XP2016S\110670-4.SchDoc

ACTION:		RANE 10802 47th Avenue West Mukilteo WA 98275-5098	MIX/XFADE XP2016S
DRAWN BY: SKH	CHECKED BY: RJ		SHEET: 4 of 6 — 110670

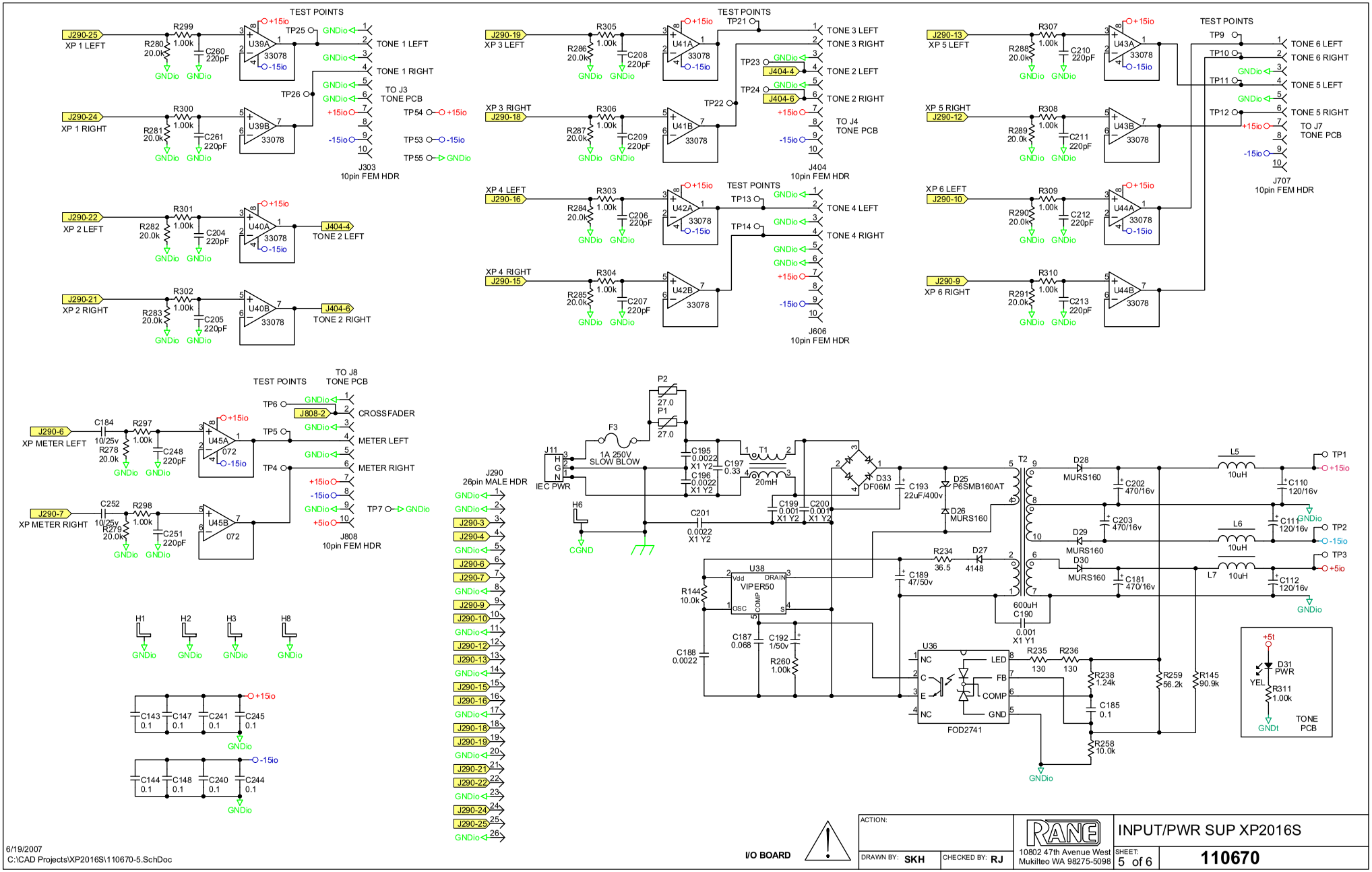
TEST POINTS
J290-25
XP 1 LEFT
R299 1.00k
R280 20.0k
C260 220pF
U39A 33078
TP25
TONE 1 LEFT
TONE 1 RIGHT
TP26
TO J3 TONE PCB
J290-24
XP 1 RIGHT
R300 1.00k
R281 20.0k
C261 220pF
U39B 33078
TP54
TP53
TP55
J303 10pin FEM HDR
J290-22
XP 2 LEFT
R301 1.00k
R282 20.0k
C204 220pF
U40A 33078
J404-4
TONE 2 LEFT
J290-21
XP 2 RIGHT
R302 1.00k
R283 20.0k
C205 220pF
U40B 33078
J404-6
TONE 2 RIGHT
TEST POINTS
J290-19
XP 3 LEFT
R305 1.00k
R286 20.0k
C208 220pF
U41A 33078
TP21
TONE 3 LEFT
TONE 3 RIGHT
TP23
TONE 2 LEFT
TP24
TONE 2 RIGHT
TP22
XP 3 RIGHT
J290-18
R306 1.00k
R287 20.0k
C209 220pF
U41B 33078
TO J4 TONE PCB
J404 10pin FEM HDR
XP 4 LEFT
J290-16
R303 1.00k
R284 20.0k
C206 220pF
U42A 33078
TP13
TONE 4 LEFT
TP14
TONE 4 RIGHT
XP 4 RIGHT
J290-15
R304 1.00k
R285 20.0k
C207 220pF
U42B 33078
J606 10pin FEM HDR
J290-13
XP 5 LEFT
R307 1.00k
R288 20.0k
C210 220pF
U43A 33078
TP9
TONE 6 LEFT
TP10
TONE 6 RIGHT
TP11
TONE 5 LEFT
TP12
TONE 5 RIGHT
TO J7 TONE PCB
J707 10pin FEM HDR
XP 5 RIGHT
J290-12
R308 1.00k
R289 20.0k
C211 220pF
U43B 33078
XP 6 LEFT
J290-10
R309 1.00k
R290 20.0k
C212 220pF
U44A 33078
J290-9
XP 6 RIGHT
R310 1.00k
R291 20.0k
C213 220pF
U44B 33078
J290-6
XP METER LEFT
C184 10/25v
R297 1.00k
R278 20.0k
C248 220pF
U45A 072
TEST POINTS
TO J8 TONE PCB
TP6
J808-2
CROSSFADER
TP5
METER LEFT
TP4
METER RIGHT
J290-7
XP METER RIGHT
C252 10/25v
R298 1.00k
R279 20.0k
C251 220pF
U45B 072
TP7
J808 10pin FEM HDR
J290 26pin MALE HDR
IEC PWR
J11
F3 1A 250V SLOW BLOW
P2 27.0
P1 27.0
C195 0.0022 X1 Y2
C196 0.0022 X1 Y2
C197 0.33
T1 20mH
C199 0.001 X1 Y2
C200 0.001 X1 Y2
C201 0.0022 X1 Y2
H6
CGND
D33 DF06M
C193 22uF/400v
D25 P6SMB160AT
D26 MURS160
T2
D28 MURS160
D29 MURS160
D30 MURS160
C202 470/16v
C203 470/16v
C181 470/16v
L5 10uH
L6 10uH
L7 10uH
C110 120/16v
C111 120/16v
C112 120/16v
TP1 +15io
TP2 -15io
TP3 +5io
R234 36.5
D27 4148
C189 47/50v
600uH C190
0.001 X1 Y1
U38 VIPER50
R144 10.0k
C187 0.068
C192 1/50v
R260 1.00k
C188 0.0022
U36 FOD2741
R235 130
R236 130
R238 1.24k
C185 0.1
R258 10.0k
R259 56.2k
R145 90.9k
D31 PWR
R311 1.00k
TONE PCB
H1
H2
H3
H8
C143 0.1
C147 0.1
C241 0.1
C245 0.1
C144 0.1
C148 0.1
C240 0.1
C244 0.1
I/O BOARD
ACTION:
DRAWN BY: SKH
CHECKED BY: RJ
RANE
10802 47th Avenue West
Mukilteo WA 98275-5098
INPUT/PWR SUP XP2016S
SHEET: 5 of 6
110670
6/19/2007
C:\CAD Projects\XP2016S\110670-5.SchDoc

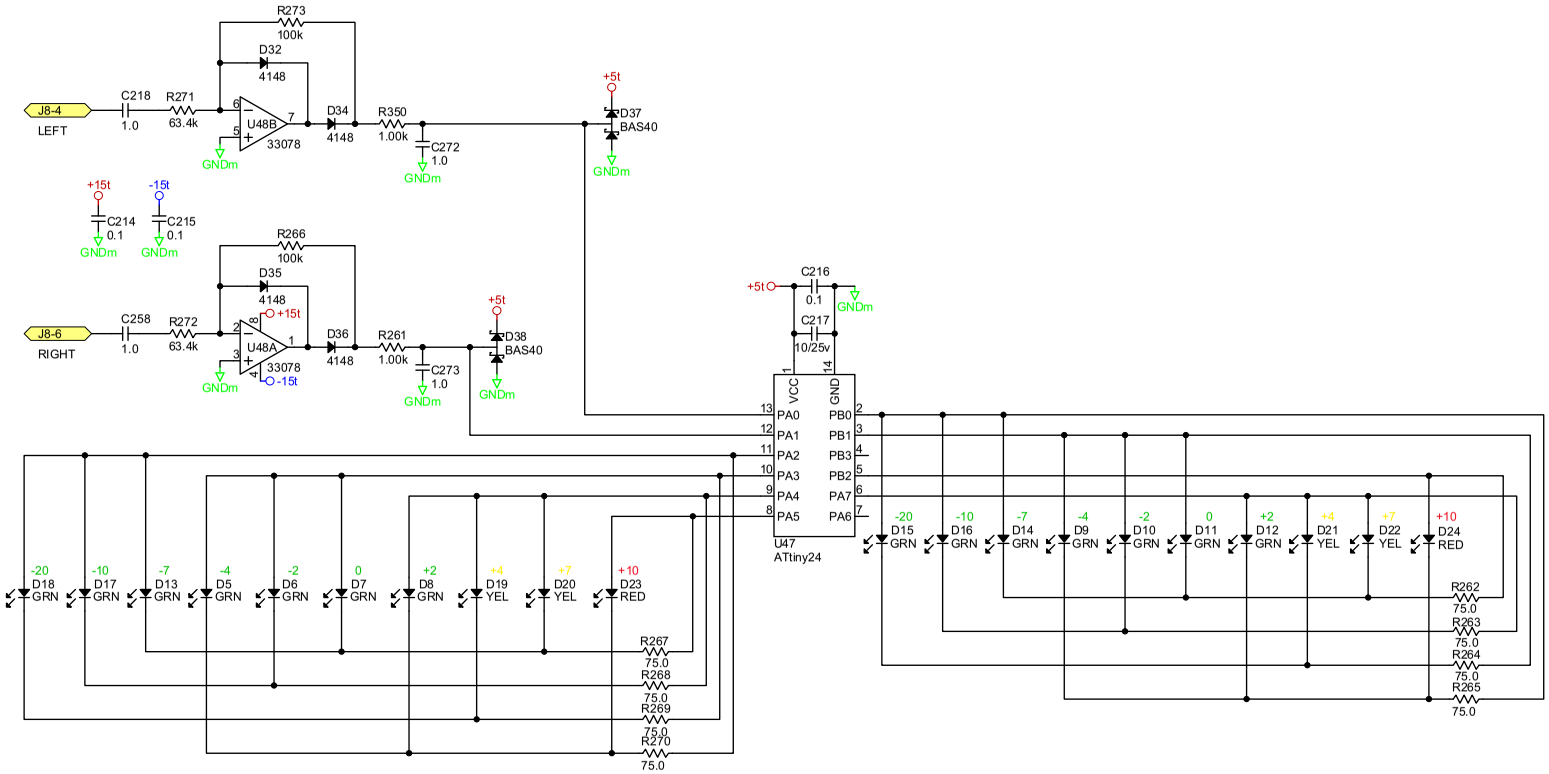

LED	READING	D3	D2	D1	D0
1	-20	X	X	0	1
2	-10	X	0	X	1
3	-7	0	X	X	1
4	-4	X	X	1	0
5	-2	X	0	1	X
6	0	0	X	1	X
7	2	X	1	X	0
8	4	X	1	0	X
9	7	0	1	X	X
10	10	1	X	X	0

PEAK RESPONDING METER
METER "0" = -20 dBFS
ATTACK RC = 1 ms
RELEASE RC = 100 ms
2 SECOND PEAK HOLD (DOT)
BAR GRAPH OF RUNNING VALUE

TONE BOARD

ACTION:

DRAWN BY: RJ

CHECKED BY: RJ

RANE
10802 47th Avenue West
Mukilteo WA 98275-5098

METER XP2016S

SHEET: 6 of 6

110670

6/19/2007
C:\CAD Projects\XP2016S\110670-6.SchDoc