MANUAL OF 1939 MOST POPULAR SERVICE DIAGRAMS

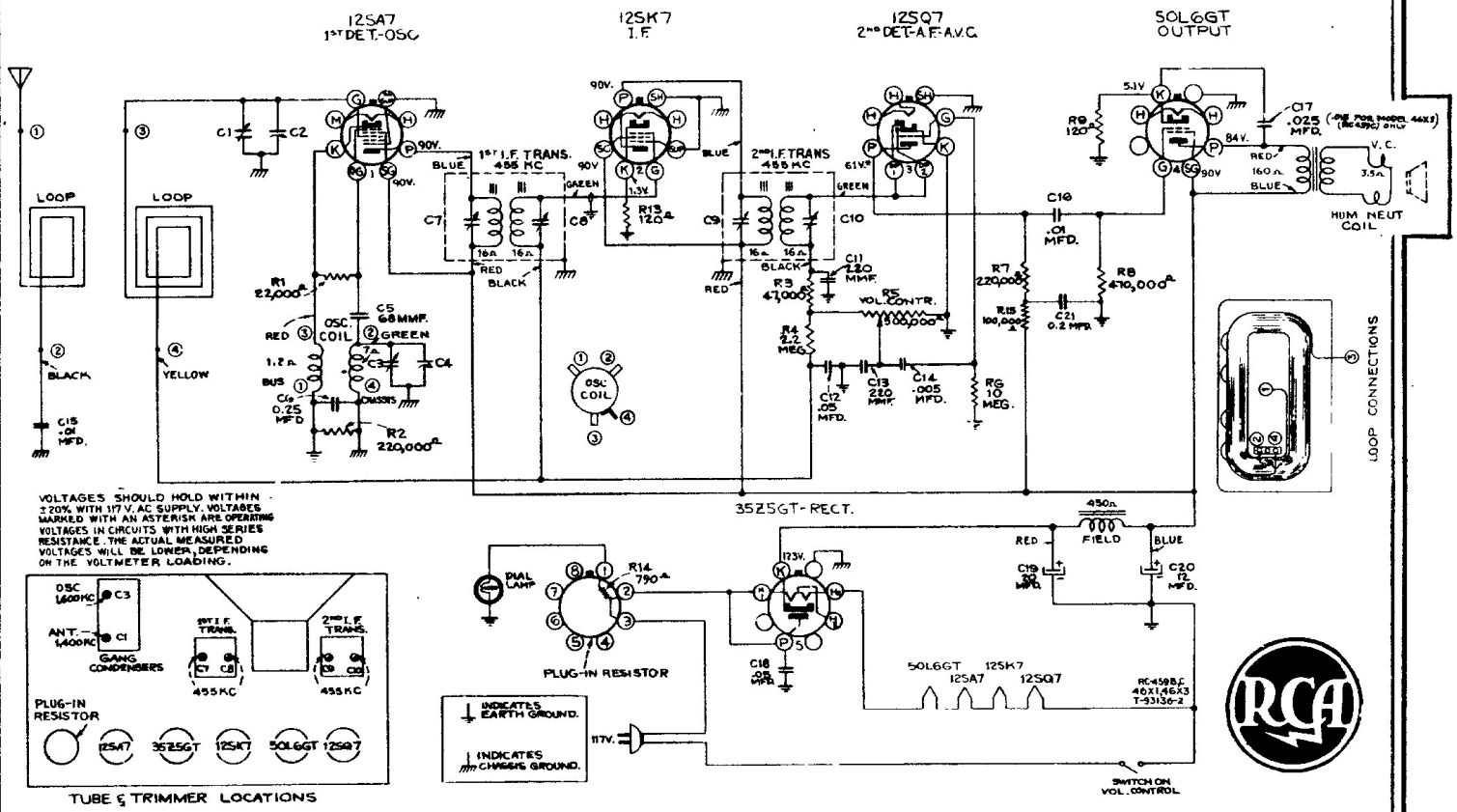

Models 46X1, 46X2 and 46X3

Chassis Nos. 459B and 459C

Models 46X11, 46X12, and 46X13

Chassis Nos. RC456 and RC456A

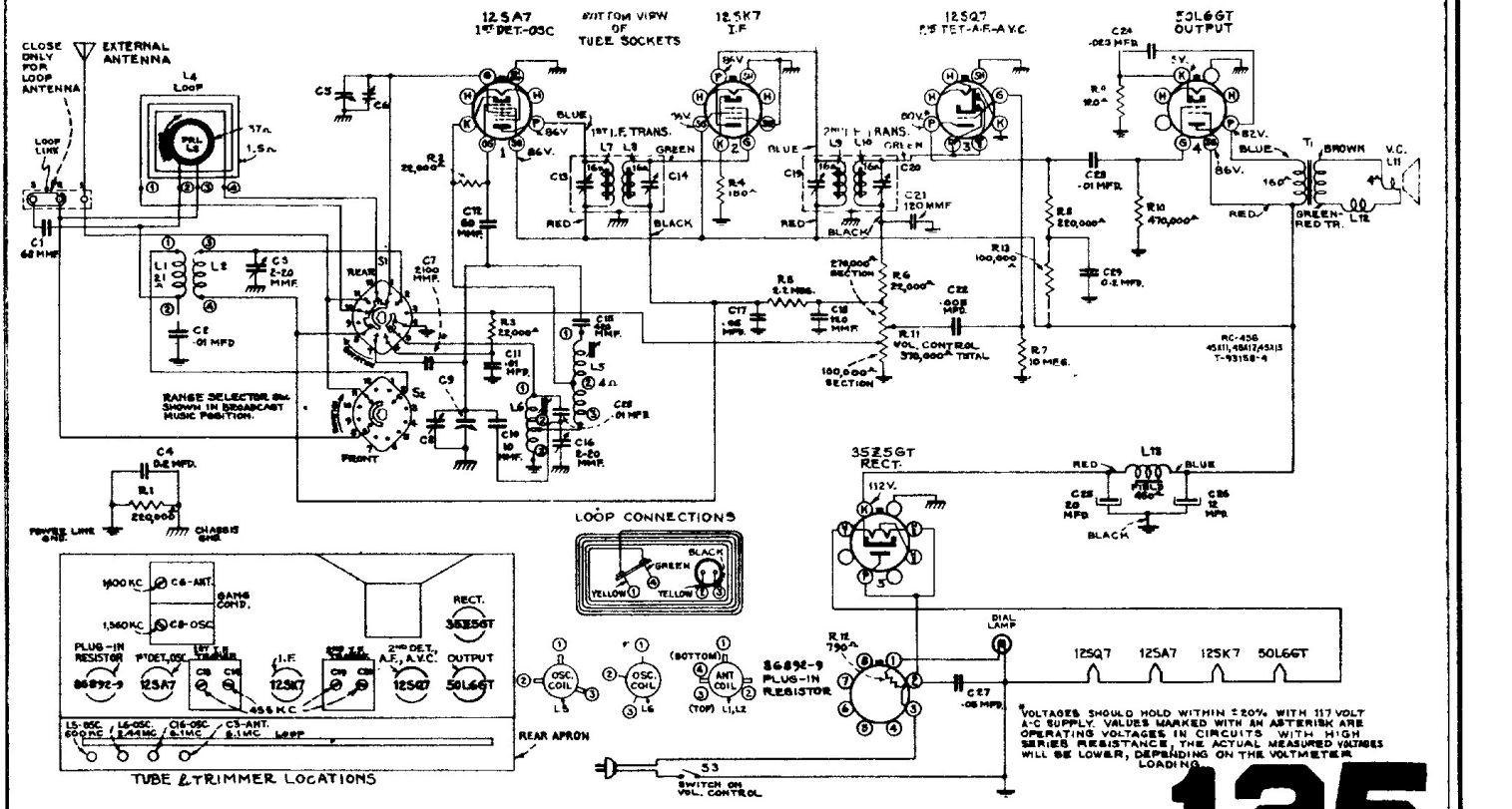

COMPILED BY M. N. BEITMAN, SUPREME PUBLICATIONS