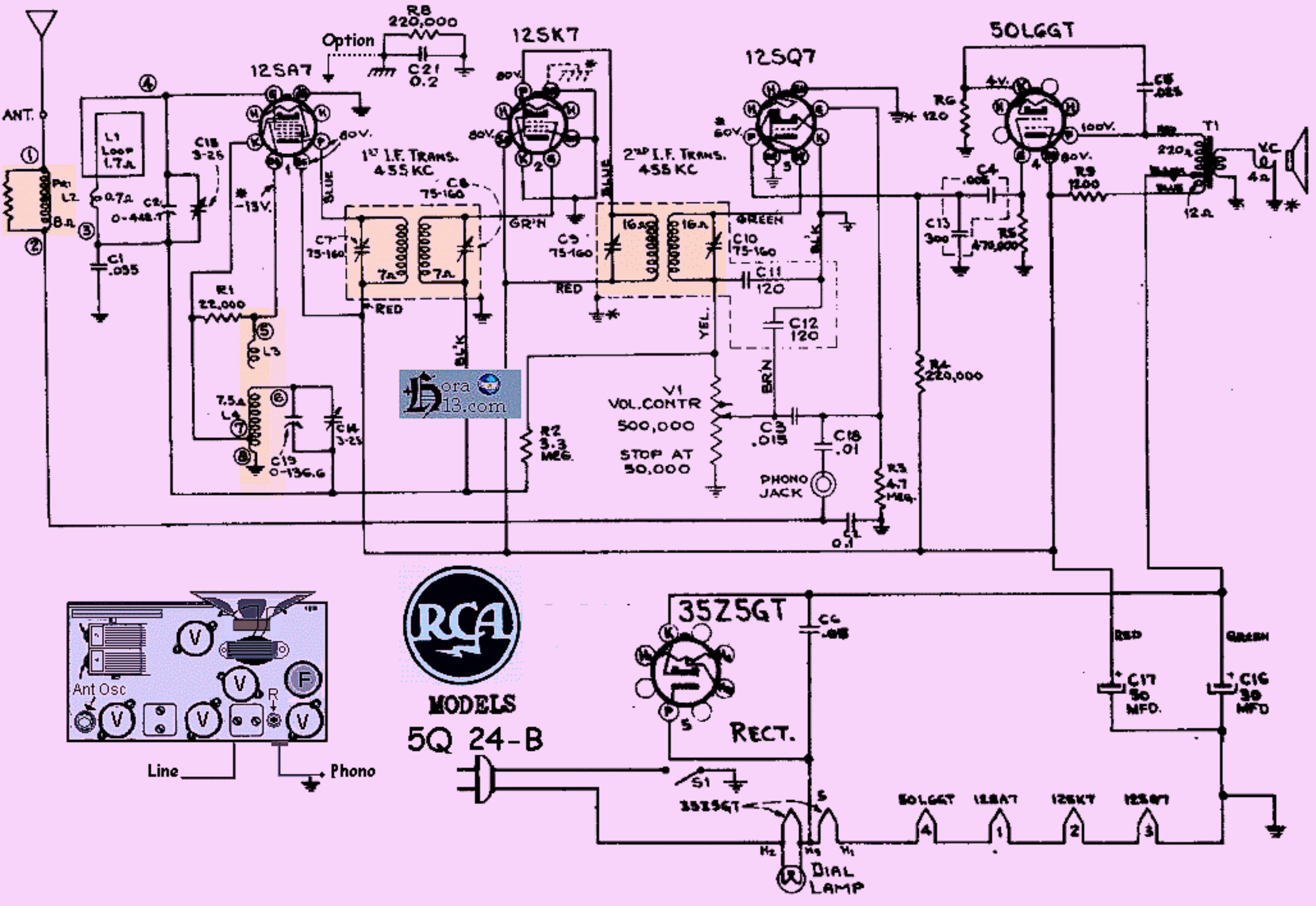

ANT.
L1 Loop 1.7Ω
L2
8Ω
0.7Ω
C1 .035
C2 0-448.7
C15 3-25
12SA7
Option
R8 220,000
C21 0.2
80V.
-13V.
1st I.F. Trans. 455 KC
C6 75-160
C7 75-160
7Ω
7Ω
BLUE
RED
BL'K
GR'N
12SK7
80V.
80V.
C9 75-160
16Ω
16Ω
2nd I.F. Trans. 455 KC
GREEN
C10 75-160
C11 120
C12 120
RED
YEL.
BR'N
12SQ7
60V.
BL'K
R1 22,000
L3
7.5Ω
L4
C14 3-25
C19 0-136.6
R2 3.3 MEG.
V1 VOL. CONTR 500,000
STOP AT 50,000
C3 .015
C18 .01
PHONO JACK
R3 4.7 MEG.
C2 0.1
R4 220,000
50L6GT
R6 120
4V.
100V.
80V.
C5 .025
C4 .005
C13 300
R5 470,000
R9 1200
T1
220Ω
12Ω
VC
4Ω
Ant Osc
Line
Phono
RCA
MODELS
5Q 24-B
35Z5GT
C6 .05
RECT.
S1
35Z5GT
50L6GT
12SA7
12SK7
12SQ7
DIAL LAMP
RED
GREEN
C17 50 MFD.
C16 30 MFD