SCHEMATIC DIAGRAM

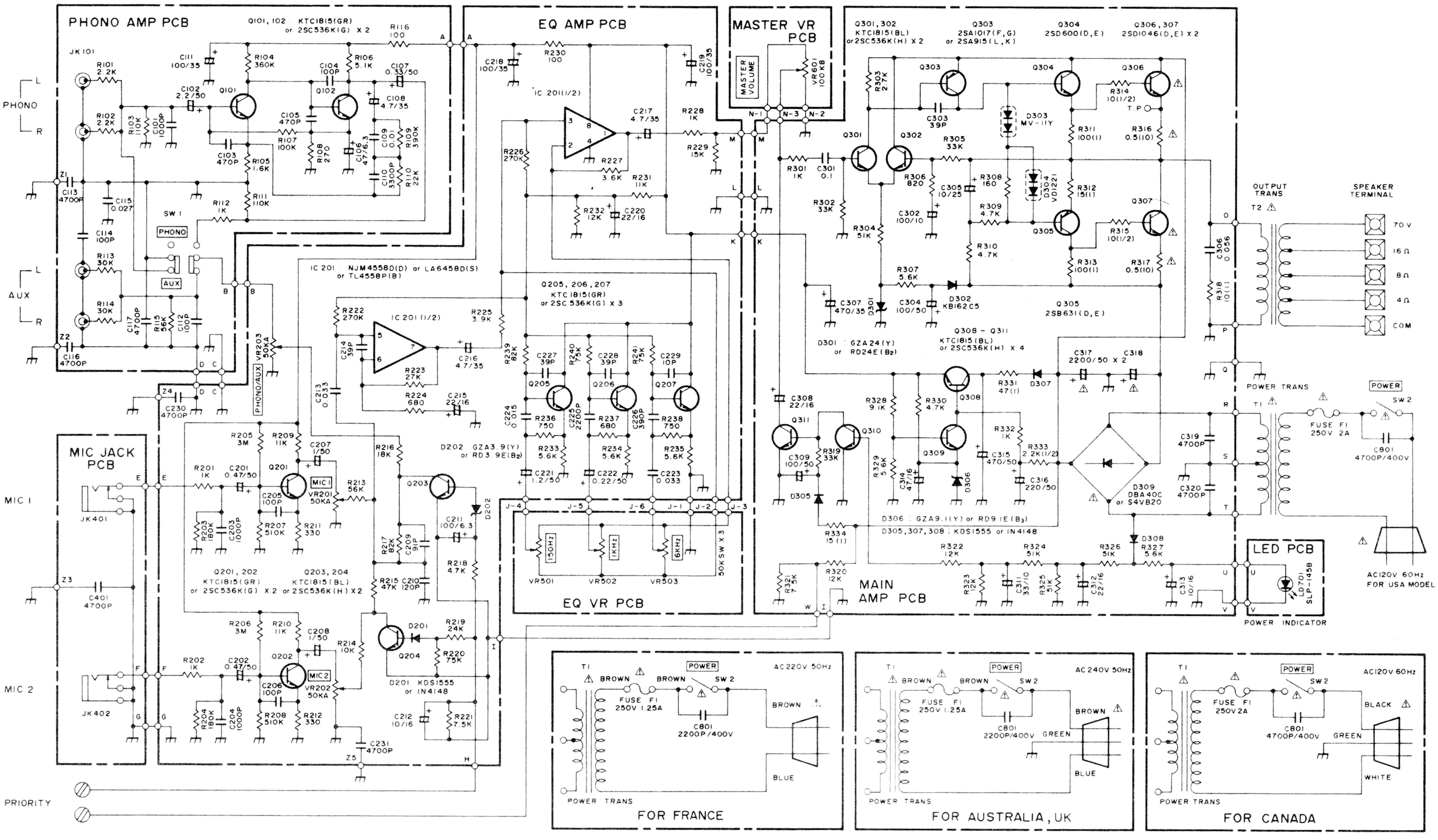

NOTE 1) ALL RESISTANCE VALUES ARE INDICATED IN "OHM" ($K = 10^3$ OHM, $M = 10^6$ OHM)
2) ALL CAPACITANCE VALUES ARE INDICATED IN "μF" ($P = 10^{-6}$ μF)

CAUTION : SINCE THE COMPONENTS MARKED BY ⚠ ARE CRITICAL FOR SAFETY, USE ONES DESCRIBED ON PARTS LIST ONLY

Schematic subject to change without notice. For most accurate schematic (and parts) contact Radio Shack, National Parts Dept., Fort Worth, TX76101.