SCHEMATIC DIAGRAM

(For U.S.A./Canada)

NOTES
1) ALL RESISTANCE VALUES IN OHMS AND 1/4 WATTS UNLESS OTHERWISE SPECIFIED.
2) ALL CAPACITANCE VALUES IN MICROFARADS EXCEPT P FOR PICOFARADS.
* SUBJECT TO MINOR CHANGE WITHOUT NOTICE.

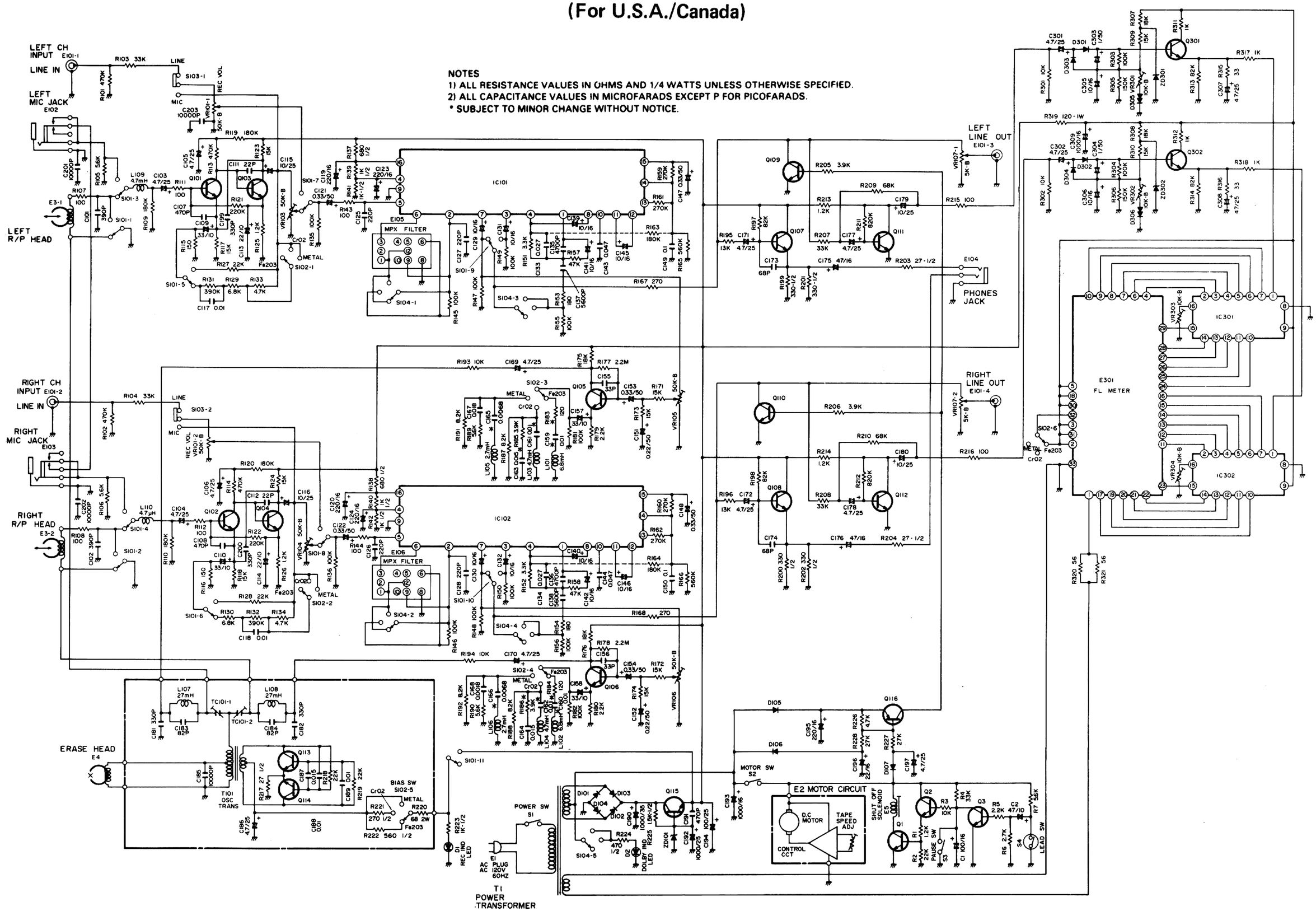

SCHEMATIC DIAGRAM

(For Europe)

NOTES
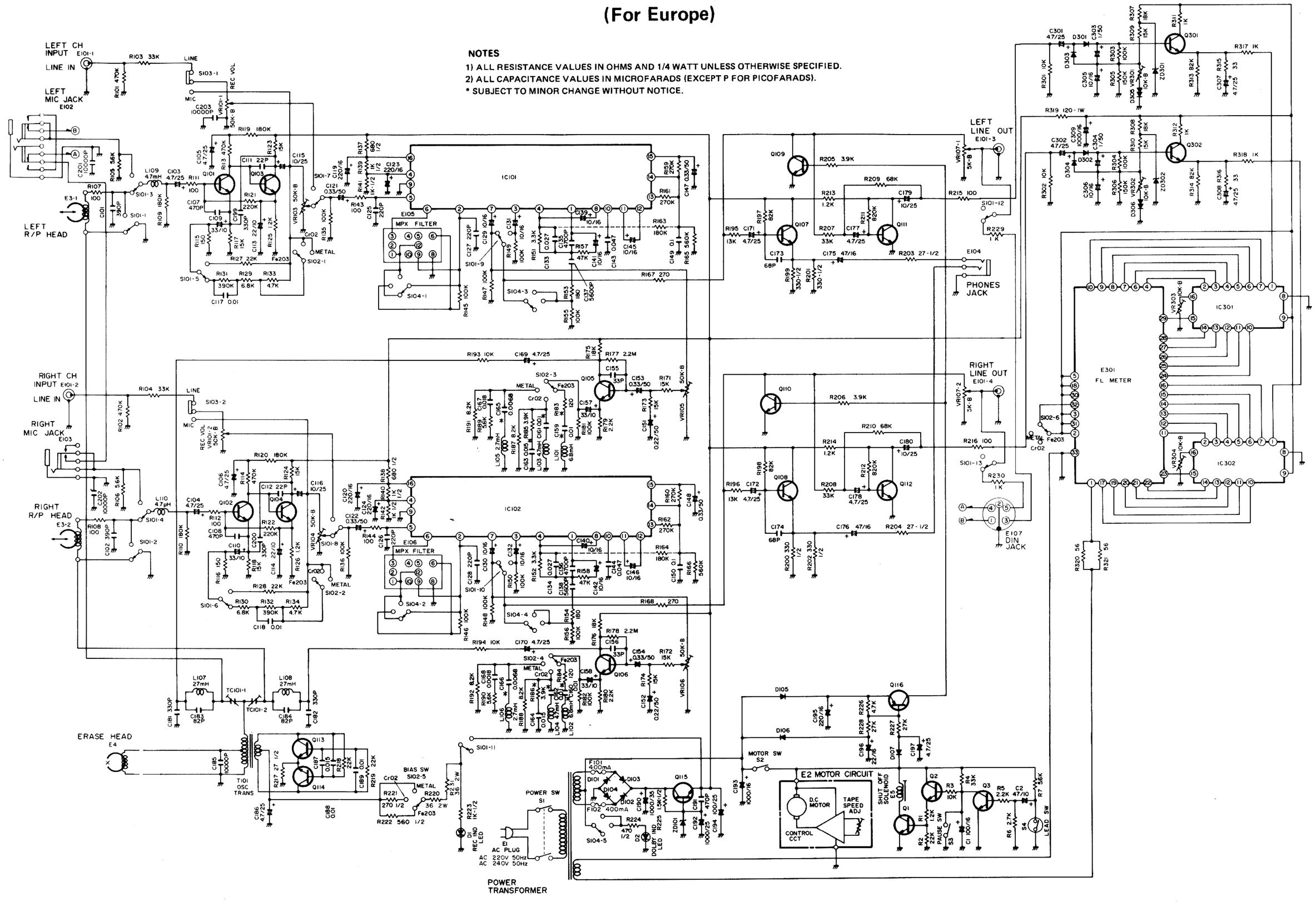
1) ALL RESISTANCE VALUES IN OHMS AND 1/4 WATT UNLESS OTHERWISE SPECIFIED.
2) ALL CAPACITANCE VALUES IN MICROFARADS (EXCEPT P FOR PICOFARADS).
* SUBJECT TO MINOR CHANGE WITHOUT NOTICE.