SCHEMATIC DIAGRAM

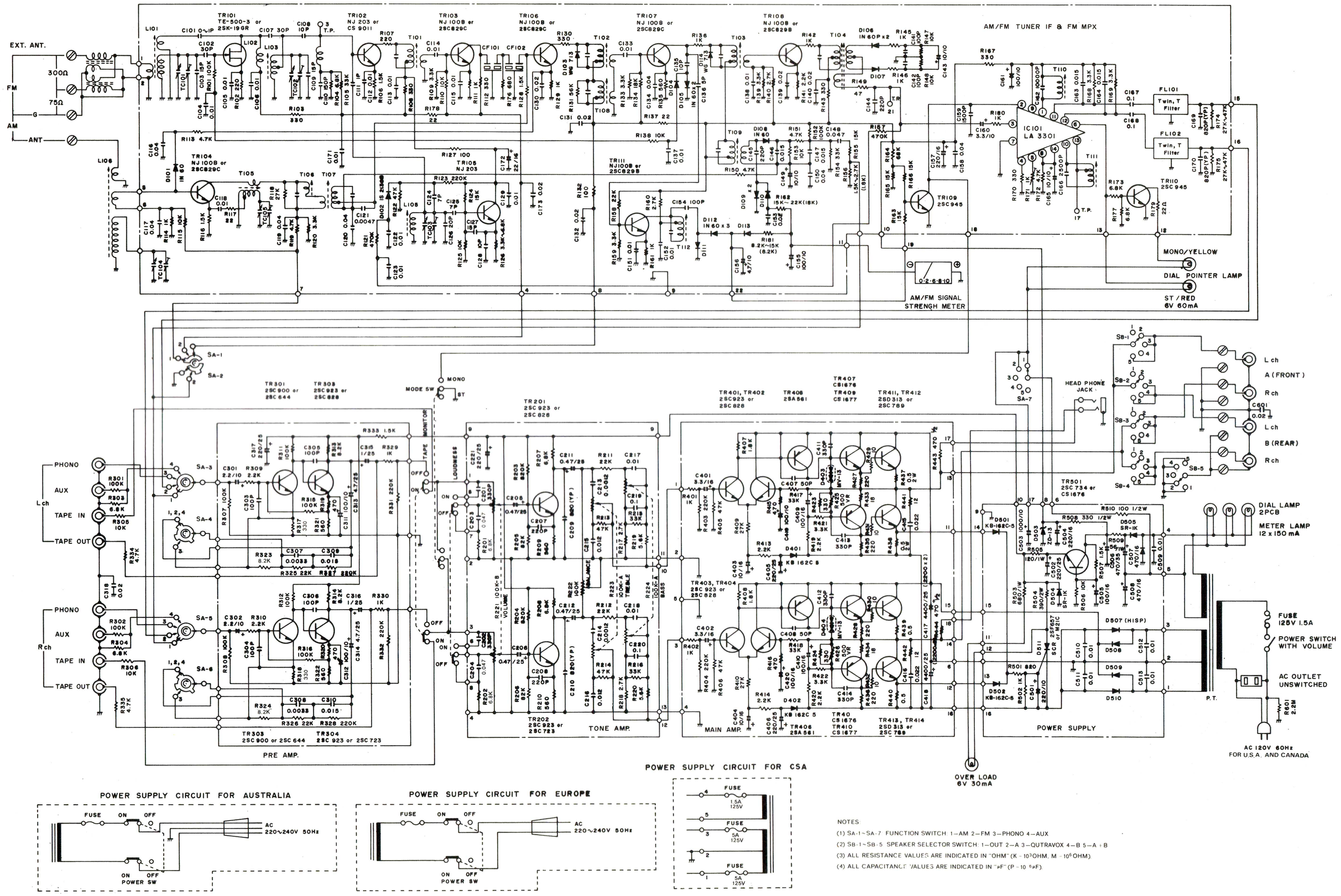

NOTES:

(1) SA-1~SA-7 FUNCTION SWITCH: 1—AM 2—FM 3—PHONO 4—AUX

(2) SB-1~SB-5 SPEAKER SELECTOR SWITCH: 1—OUT 2—A 3—QUTRAVOX 4—B 5—A + B

(3) ALL RESISTANCE VALUES ARE INDICATED IN "OHM" (K = 10^3OHM, M = 10^6OHM).

(4) ALL CAPACITANCE VALUES ARE INDICATED IN "μF" (P = 10^{-6}μF).