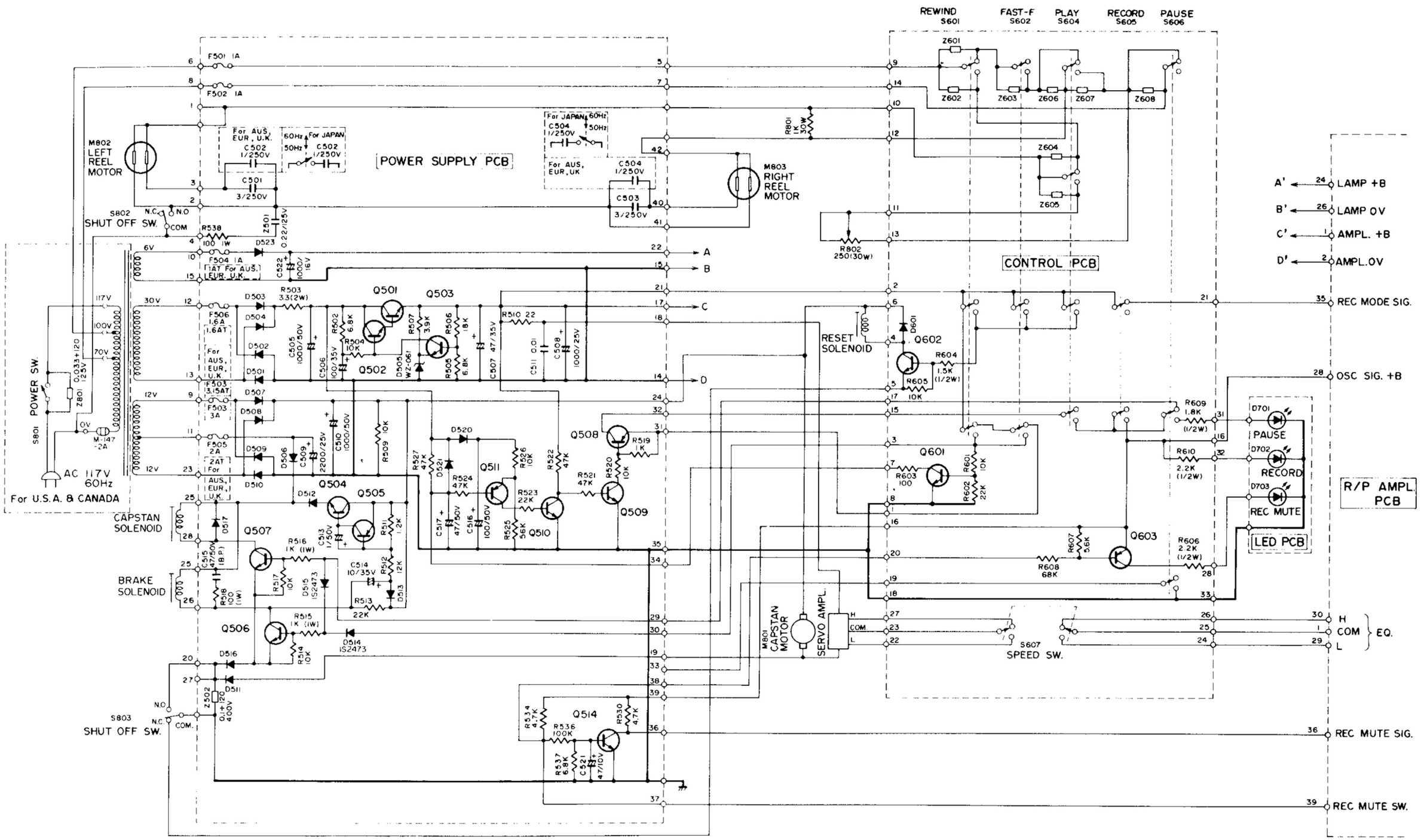

UNLESS OTHERWISE SPECIFIED
ALL SW. ARE OFF POSITION, STOP MODE.
ALL RESISTORS IN OHM , 1/4 W.
ALL CAPACITORS IN MICROFARAD
ALL DIODES ARE ERB12-02G1.
—□— ARE SPARK KILLERS, 0.033μ+120 OHM

Q501	2SD313 (E)	Q506	2SD600K (F)	Q511	2SA733 (P)	Q601	2SC1318 (S)
Q502	2SC1318 (S)	Q507	2SD600K (F)	Q514	2SC945A(K)	Q602	2SD600K(F)
Q503	2SC536 (F)	Q508	2SA720 (Q)			Q603	2SA733 (P)
Q504	2SD313 (E)	Q509	2SC945A(K)				
Q505	2SA720 (Q)	Q510	2SC945A(K)				

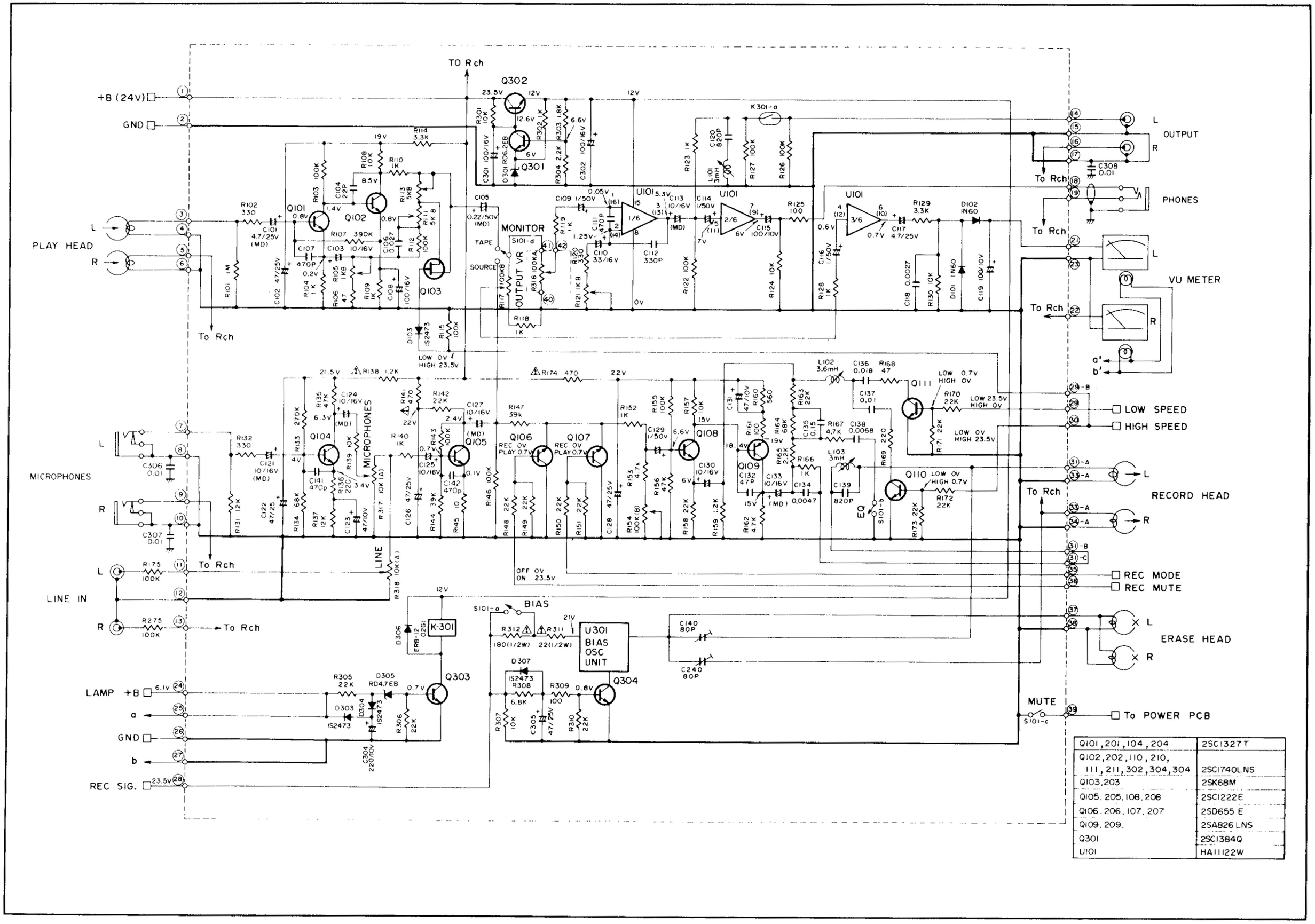

Q101, 201, 104, 204	2SC1327T
Q102, 202, 110, 210, 111, 211, 302, 304, 304	2SC1740LNS
Q103, 203	2SK68M
Q105, 205, 108, 208	2SC1222E
Q106, 206, 107, 207	2SD655 E
Q109, 209,	2SA826 LNS
Q301	2SC1384Q
U101	HA11122W